Pioneering for You

Catalogue Building Services 2013/2014

Water Supply

Pumps, pump systems and accessories for rain water utilisation, water supply, pressure boosting and raw water intake

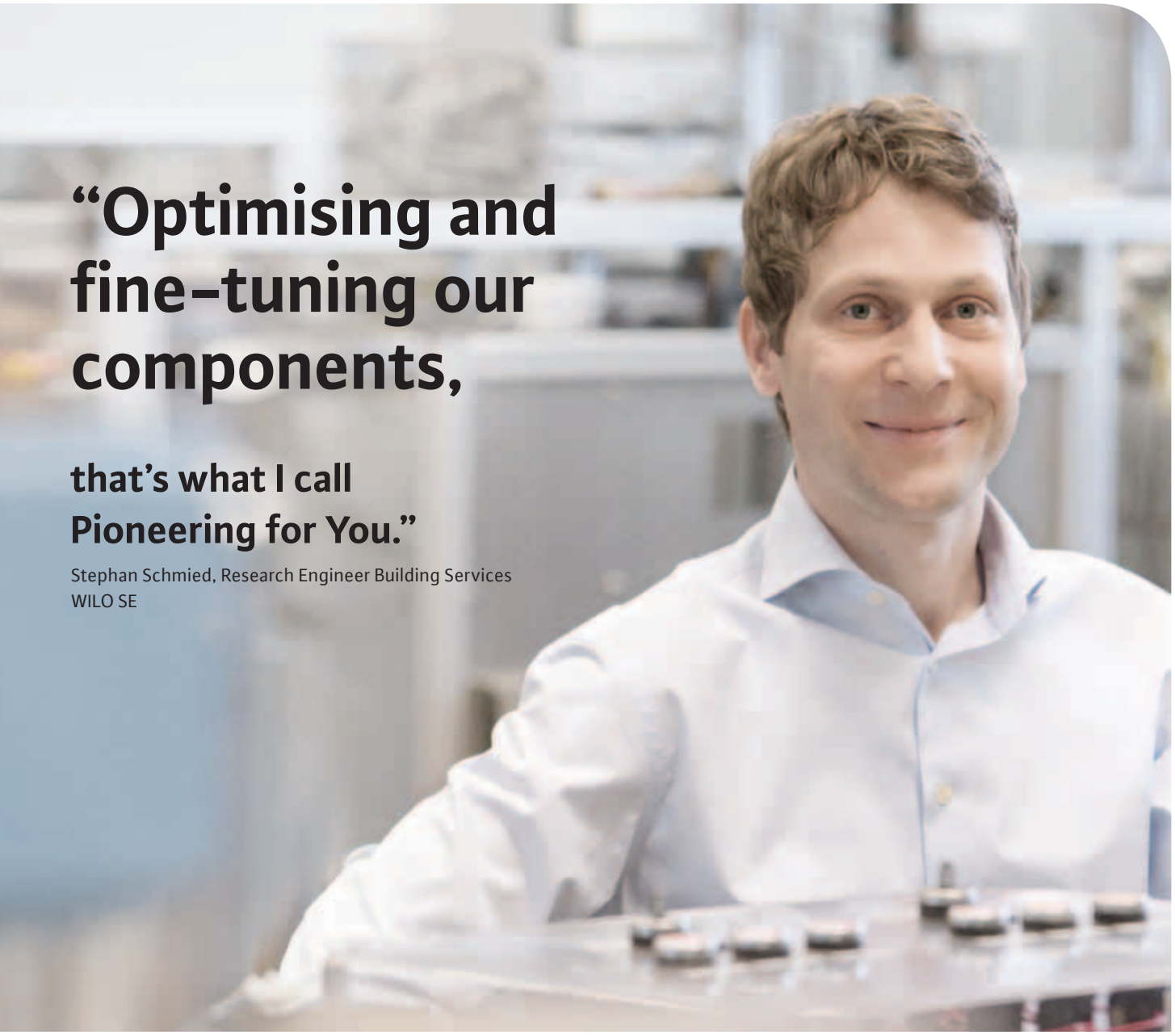

“Optimising and fine-tuning our components,

that’s what I call Pioneering for You.”

Stephan Schmied, Research Engineer Building Services
WILO SE

Pumps are complex systems which depend on every single component and the perfect interaction of all parts. The high efficiency of our excellent portfolio of products is down to an ever more precise and finely honed system functionality.

Wilo-Geniax

Wilo-Stratos PICO

Wilo-Stratos

Wilo-Stratos GIGA

Wilo-SiBoost Smart Helix EXCEL

Pioneering for You

wilo

Contents

General notes and abbreviations 11

Rainwater utilisation 24

Wilo-RainSystem AF Basic
Wilo-RainSystem AF Comfort
Wilo-RainSystem AF 150
Wilo-RainSystem AF 400
Wilo-RainCollector RWN 1500

Domestic water supply 47

Self-priming pumps and systems
Wilo-Jet WJ, FWJ, HWJ
Wilo-Multicargo MC, FMC, HMC
Non self-priming pumps and systems
Wilo-Multipress MP, FMP, HMP
Wilo-EMHIL
Wilo-Sub TWU 3 Plug & Pump, TWU 4 Plug & Pump
Wilo-Sub TWI 5/TWI 5-SE, Sub TWI 5-SE Plug & Pump
Submersible pumps
Wilo-Sub TWU 3, 3-HS, TWU 4, 4-GT, 4-QC, Sub TWI 4-B

Pressure boosting 196

Single pumps
Single-pump systems
Wilo-SiBoost Smart, Comfort-Vario, speed-controlled
Wilo-Economy with fixed speed
Multi-pump systems
Wilo-SiBoost Smart, Comfort-Vario, speed-controlled
Wilo-SiBoost Smart, Comfort with fixed speed or speed-controlled base-load pump
Wilo-Economy with fixed speed

Fire fighting 1176

Fire fighting systems, EMU sprinkler pumps

Raw water intake 1260

Wilo-Sub TWU 3, -3/HS
Wilo-Sub TWU 4, -4-GT
Wilo-Sub TWU 4-QC
Wilo-Sub TWI 4-B, -6-B, -8-B, -10-A

CO_2 emissions of this product have been compensated with emission reduction certificates.
The paper of this catalogue is made of wood from sustainable and regional forest management.

ClimatePartner°
klimaneutral
Druck | ID: 53446-1301-1001

PEFC
PEFC/04-31-0810

Water Supply

Contents

Rainwater utilisation

Pump systems with system separation	**Series overview**	**24**
	Wilo-RainSystem AF Basic	28
	Wilo-RainSystem AF Comfort	29
	Wilo-RainSystem AF 150	31
	Wilo-RainSystem AF 400	35
	Wilo-RainCollector RWN 1500	39
Accessories	Mechanical accessories	42
	Electrical accessories	46

Domestic water supply

Self-priming pumps and systems	**Series overview**	**47**
	Wilo-Jet WJ	51
	Wilo-Jet FWJ	53
	Wilo-Jet HWJ	55
	Wilo-Multicargo MC	58
	Wilo-MultiCargo FMC	62
	Wilo-MultiCargo HMC	65
Non self-priming pumps and systems	**Series overview**	**68**
	Wilo-Multipress MP	75
	Wilo-MultiPress FMP	79
	Wilo-MultiPress HMP	82
	Wilo-EMHIL	85
	Wilo-Sub TWU 3 Plug & Pump	88
	Wilo-Sub TWU 4 Plug & Pump	93
	Wilo-Sub TWI 5/TWI 5-SE	98
	Wilo-Sub TWI 5-SE Plug & Pump	106
Submersible pumps	**Series overview**	**109**
	Wilo-Sub TWU 3	112
	Wilo-Sub TWU 3-HS	117
	Wilo-Sub TWU 4	128
	Wilo-Sub TWU 4-GT	142
	Wilo-Sub TWU 4-QC	147
	Wilo-Sub TWI 4-B	158
Accessories	Mechanical accessories	1409
	Electrical accessories	1421

*) see series overview or Wilo online catalogue

Pressure boosting

Single pumps	**Series overview**	**196**
	Wilo-Helix EXCEL	202
	Wilo-Helix VE	231
	Wilo-Helix V	354
	Wilo-Helix X-Care	389
	Wilo-Multivert MVIE	391
	Wilo-Multivert MVI	434
	Wilo-Multivert MVISE	468
	Wilo-Multivert MVIS	480
	Wilo-Economy MHIE	491
	Wilo-Economy MHI	507
	Wilo-Economy MHIL	517 *)
	Wilo-Economy MVIL	519 *)
Accessories	Mechanical accessories	1172
	Electrical accessories	1175
Single-pump systems	**Series overview**	**521**
speed-controlled	Wilo-SiBoost Smart 1 Helix VE	527
	Wilo-Comfort-Vario COR-1 Helix VE...-GE/VR	551
	Wilo-Comfort-Vario COR-1 MVIE...-GE/VR	571
	Wilo-Comfort-N-Vario COR-1 MVISE...-GE	607
	Wilo-Comfort Vario COR-1 MHIE...GE	616
with fixed speed	Wilo-Economy CO-1 Helix V... /CE+	625
	Wilo-Economy CO-1 MVI... / ER	642
	Wilo-Economy CO/T-1 MVI... / ER (unit with system separation)	660
	Wilo-Economy CO-1 MVIS... / ER	666
Multi-pump systems	**Series overview**	**674**
speed-controlled	Wilo-SiBoost Smart Helix EXCEL	680
	Wilo-SiBoost Smart Helix VE	690
	Wilo-Comfort COR Helix VE... / CCe	706
	Wilo-Comfort Vario COR Helix VE... / VR	752
	Wilo-Comfort-Vario COR MVIE .../ VR	784
	Wilo-Comfort-N-Vario COR MVISE.../ VR	850
	Wilo-Comfort-Vario COR MHIE... / VR	866
with fixed speed or speed-controlled base-load pump	Wilo-SiBoost Smart (FC) Helix V	882
	Wilo-Comfort CO/COR Helix V... / CC	934
	Wilo-Comfort CO/COR MVI... / CC	1008
	Wilo-Comfort-N-CO-/COR-MVIS.../CC	1092
with fixed speed	Wilo-Economy CO-MHI.../ER	1124

*) see series overview or Wilo online catalogue

Water Supply

Contents

Switchgears and control devices		
Single-pump systems	Wilo-Economy-Controller CE+	1150
	Wilo-Economy-Controller ER 1	1151
Multi-pump systems	Wilo-Smart-Controller SC	1152
	Wilo-Comfort-Controller CC	1154
	Wilo-Comfort-Vario-Controller	1157
	Wilo-Economy-Controller ER 2-4	1161
Accessories	Mechanical accessories	1172
	Electrical accessories	1175

Fire fighting

Fire fighting systems	**Series overview**	**1176**
	Wilo-FLA-1	1178
	Wilo-FLA-2	1190
Sprinkler pumps	Wilo-EMU sprinkler pumps D..., K... und KM...	1202
Accessories	Accessories Fire fighting systems	1258
	Accessories sprinkler pumps	1259

Raw water intake

Single pumps	**Series overview**	**1260**
	Wilo-Sub TWU 3	1263
	Wilo-Sub TWU 3-HS	1265
	Wilo-Sub TWU 4	1267
	Wilo-Sub TWU 4-QC	1269
	Wilo-Sub TWI 4-B	1271
	Wilo-Sub TWI 6-B	1309
	Wilo-Sub TWI 8-B	1344
	Wilo-Sub TWI 10-A	1375
Accessories	Mechanical accessories	1409
	Electrical accessories	1421

*) see series overview or Wilo online catalogue

Programme overview and fields of applications

	Pump type	Version					Main field of application							
		Self-priming	Non-self-priming	Submersible pumps	Fixed speed	Speed-controlled								Page
Rainwater utilisation														
Pump systems with system separation	Wilo-RainSystem AF Basic	•	–	–	•	–	S	–	–	–	–	–	–	28
	Wilo-RainSystem AF Comfort	•	–	–	•	–	S	–	–	–	–	–	–	29
	Wilo-RainSystem AF 150	•	–	–	•	–	M/C	–	–	–	–	–	–	31
	Wilo-RainSystem AF 400	–	•	–	•	–	M/C	–	–	–	–	–	–	35
	Wilo-RainCollector RWN 1500	•	–	–	•	–	S	–	–	–	–	–	–	39
Domestic water supply														
Self-priming pumps and systems	Wilo-Jet WJ	•	–	–	•	–	S	S	–	–	S	–	–	51
	Wilo-Jet FWJ	•	–	–	•	–	S	S	–	–	S	–	–	53
	Wilo-Jet HWJ	•	–	–	•	–	S	S	–	–	S	–	–	55
	Wilo-Multicargo MC	•	–	–	•	–	S	S	–	–	S	–	–	58
	Wilo-MultiCargo FMC	•	–	–	•	–	S	S	–	–	S	–	–	62
	Wilo-MultiCargo HMC	•	–	–	•	–	S	S	–	–	S	–	–	65
Non self-priming pumps and systems	Wilo-Multipress MP	–	•	–	•	–	S	S	–	–	S	–	–	75
	Wilo-MultiPress FMP	–	•	–	•	–	S	S	–	–	S	–	–	79
	Wilo-MultiPress HMP	–	•	–	•	–	S	S	–	–	S	–	–	82
	Wilo-EMHIL	–	•	–	•	–	S	S	–	–	S	–	–	85
	Wilo-Sub TWU 3 Plug & Pump System	–	•	•	•	–	S/M	–	–	–	S/M	–	–	88
	Wilo-Sub TWU 4 Plug & Pump System	–	•	•	•	–	S/M	–	–	–	S/M	–	–	93
	Wilo-Sub TWI 5/TWI 5-SE	–	•	•	•	–	S	S	–	–	S	–	–	98
	Wilo-Sub TWI 5-SE Plug & Pump	–	•	•	•	–	S	S	–	–	S	–	–	106
Submersible pumps	Wilo-Sub TWU 3	–	•	•	•	–	S/M	S/M	–	–	S/M	–	–	112
	Wilo-Sub TWU 3-HS	–	•	•	–	•	S/M	S/M	–	–	S/M	–	–	117
	Wilo-Sub TWU 4	–	•	•	•	–	S/M	S/M	–	–	S/M	–	–	128
	Wilo-Sub TWU 4-GT	–	•	•	•	–	–	S/M	–	–	–	–	–	142
	Wilo-Sub TWU 4-QC	–	•	•	•	–	S/M	S/M	–	–	S/M	–	–	147
	Wilo-Sub TWI 4-B	–	•	•	•	–	S/M	S/M	–	–	S/M	–	–	158

Programme overview and fields of applications

	Pump type	Version					Main field of application							Page
		Self-priming	Non-self-priming	Submersible pumps	Fixed speed	Speed-controlled								
Pressure boosting														
Single pumps	Wilo-Helix EXCEL	–	•	–	–	•	–	S/M/C	–	–	–	–	–	202
	Wilo-Helix VE	–	•	–	–	•	–	S/M/C	–	–	–	–	–	231
	Wilo-Helix V	–	•	–	•	–	–	S/M/C	–	–	–	–	C	354
	Wilo-Multivert MVIE	–	•	–	–	•	–	S/M/C	–	–	–	–	–	391
	Wilo-Multivert MVI	–	•	–	•	–	–	S/M/C	–	–	–	–	C	434
	Wilo-Multivert MVISE	–	•	–	•	–	–	–	–	–	–	–	–	468
	Wilo-Multivert MVIS	–	•	–	–	•	–	–	–	–	–	–	–	480
	Wilo-Economy MHIE	–	•	–	–	•	–	S/M/C	–	–	–	–	–	491
	Wilo-Economy MHI	–	•	–	•	–	–	S/M/C	–	–	–	–	–	507
	Wilo-Economy MHIL	–	•	–	•	–	–	–	–	–	–	–	–	517*)
	Wilo-Economy MVIL	–	•	–	•	–	–	–	–	–	–	–	–	519*)
Single-pump system	Wilo-SiBoost Smart 1 Helix VE	–	•	–	–	•	–	S/C	–	–	–	–	–	527
	Wilo-Comfort-Vario COR-1 Helix VE...-GE/VR	–	•	–	–	•	–	S/C	–	–	–	–	–	551
	Wilo-Comfort-Vario-COR-1 MVIE...-GE/VR	–	•	–	–	•	–	S/C	–	–	–	–	–	571
	Wilo-Comfort-N-Vario COR 1 MVISE.../GE	–	•	–	–	•	–	M/C	–	–	–	–	–	607
	Wilo-Comfort-Vario COR-1 MHIE...-GE	–	•	–	–	•	–	S/C	–	–	–	–	–	616
	Wilo-Economy-CO-1 Helix V... /CE+	–	•	–	•	–	–	S/C	–	–	–	–	–	625
	Wilo-Economy-CO-1 MVI.../ER	–	•	–	•	–	–	S/C	–	–	–	–	–	642
	Wilo-Economy-CO/T-1 MVI... / ER (unit with system separation)	–	•	–	•	–	–	S/C	–	–	–	–	–	660
	Wilo-Economy-CO-1 MVIS.../ER	–	•	–	•	–	–	S/C	–	–	–	–	–	666

*) **Detailed information on these products can be found in the Wilo Online Catalogue**

Key:

S Single- and two-family houses
M Multi-family houses
C Commercial
• Applicable
– Not applicable
☞ **New in the programme or series extension or modification**

[1]) Local prescriptions and directivesmust be observed

Fields of application:

Rainwater utilisation
Water distribution/boosting
Fire fighting[1])
Clean water treatment
Raw water intake
Desalination
Professional irrigation/agriculture

Programme overview and fields of applications

	Pump type	Version					Main field of application							Page
		Self-priming	Non-self-priming	Submersible pumps	Fixed speed	Speed-controlled								
Pressure boosting														
Multi-pump systems	Wilo-SiBoost Smart Helix EXCEL	–	•	–	–	•	–	M/C	–	–	–	–	–	680
	Wilo-SiBoost Smart Helix VE	–	•	–	–	•	–	M/C	–	–	–	–	–	690
	Wilo-Comfort COR Helix VE... /CCe	–	•	–	–	•	–	M/C	–	–	–	–	–	706
	Wilo-Comfort COR Helix VE... /VR	–	•	–	–	•	–	M/C	–	–	–	–	–	706
	Wilo-Comfort-Vario COR MVIE .../VR	–	•	–	–	•	–	M/C	–	–	–	–	–	752
	Wilo-Comfort-N-Vario COR MVISE .../VR	–	•	–	–	•	–	M/C	–	–	–	–	–	850
	Wilo-Comfort-Vario COR MHIE.../VR	–	•	–	–	•	–	M/C	–	–	–	–	–	866
	Wilo-SiBoost Smart Helix V	–	•	–	•	–	–	M/C	M/C	–	–	–	–	882
	Wilo-SiBoost Smart FC Helix V	–	•	–	–	•	–	M/C	M/C	–	–	–	–	882
	Wilo-Comfort CO Helix V.../CC	–	•	–	•	–	–	M/C	M/C	–	–	–	–	934
	Wilo-Comfort COR Helix V... /CC	–	•	–	–	•	–	M/C	M/C	–	–	–	–	934
	Wilo-Comfort CO MVI.../CC	–	•	–	•	–	–	M/C	M/C	–	–	–	–	1008
	Wilo-Comfort COR MVI.../CC	–	•	–	–	•	–	M/C	M/C	–	–	–	–	1008
	Wilo-Comfort-N-CO MVIS.../CC	–	•	–	•	–	–	M/C	–	–	–	–	–	1092
	Wilo-Comfort-N-COR MVIS.../CC	–	•	–	–	•	–	M/C	–	–	–	–	–	1008
	Wilo-Economy CO MHI.../ER	–	•	–	•	–	–	M/C	M/C	–	–	–	–	1124
Fire fighting														
Fire fighting systems	Wilo-FLA-1	–	•	–	•	–	–	–	M/C	–	–	–	–	1178
	Wilo-FLA-2	–	•	–	•	–	–	–	M/C	–	–	–	–	1190
EMU sprinkler pumps with VdS approval	Wilo-EMU sprinkler pumps D..., K... und KM...	–	•	•	•	–	–	–	C	–	–	–	–	1202

Programme overview and fields of applications

	Pump type	Version					Main field of application							Page
		Self-priming	Non-self-priming	Submersible pumps	Fixed speed	Speed-controlle								
Raw water intake														
Single pumps	Wilo-Sub TWU 3	–	•	•	•	–	S/M	S/M	–	–	S/M	–	–	1263
	Wilo-Sub TWU 3-HS	–	•	•	–	•	S/M	S/M	–	–	S/M	–	–	1265
	Wilo-Sub TWU 4	–	•	•	•	–	S/M	S/M	–	–	S/M	–	–	1267
	Wilo-Sub TWU 4-QC	–	•	•	•	–	S/M	S/M	–	–	S/M	–	–	1269
	Wilo-Sub TWI 4-B	–	•	•	•	–	S/M	S/M	–	–	S/M	–	–	1271
	Wilo-Sub TWI 6-B	–	•	•	•	–	–	M/C	–	C	C	C	C	1309
	Wilo-Sub TWI 8-B	–	•	•	•	–	–	C	–	C	C	C	C	1344
	Wilo-Sub TWI 10-A	–	•	•	•	–	–	C	–	C	C	C	C	1375

*) **Detailed information on these products can be found in the Wilo Online Catalogue**

Key:

S Single- and two-family houses
M Multi-family houses
C Commercial
• Applicable
– Not applicable
☞ **New in the programme or series extension or modification**

1) Local prescriptions and directivesmust be observed

Fields of application:

Rainwater utilisation
Water distribution/boosting
Fire fighting1)
Clean water treatment
Raw water intake
Desalination
Professional irrigation/agriculture

General notes and abbreviations

Abbreviation	Meaning
1~	1-phase current
3~	3-phase current
ACS	L'Attestation de conformité sanitaire (potable water approval for France)
D	Direct activation
DM	Three-phase motor, 3~
DN	Nominal diameter of the flange connection
EM	Single-phase motor, 1~
EMSC	AC motor with integrated starting capacitor
GRD/GLRD	Mechanical seal
°dH	Degree of German water hardness; replaced by the SI unit mmol/l; conversion 1 °dh = 0.1783 mmol/l
H, Hman	Delivery head
H_z	Range of approval for sprinkler pumps (delivery head)
I_A	Starting current
I_N	Nominal current; current at P_2
I_W	Current consumption for shaft power requirement P_W
Inst.	Installation: H = horizontal, V = vertical
KLF	PTC thermistor sensor
Cataphoretic coating	Cataphoretic coating (electrophoretically deposited paint, EDP): paintwork with high adhesive strength for long-lasting corrosion protection
KTW	Approval for products with plastics, for utilisation in potable water applications
Max. Ø	Maximum unit diameter incl. cable
mmol/l	Millimols per litre; SI unit for assessing water hardness (total hardness, or concentration of alkaline earth ions)
P_1	Power consumption (power supplied from the network)
P_2 (P_N)	Nominal motor power
P_W	Power requirement of the pump hydraulics
PN	Pressure class in bar (e.g. PN10 = suitable up to 10 bar)
PTC	Positive temperature coefficient (PTC thermistor sensor)
PT 100	Platinum temperature sensor with a resistance value of 100 Ω at 0 °C
Q (=$\dot{V}$)	Volume flow
Q_Z	Range of approval for sprinkler pumps (volume flow rate)
RV	Non-return valve
RVF	Non-return valve, spring-mounted
SBM	Run signal or collective run signal
SD	Three-phase motor with star/delta activation
SD-R	Three-phase motor with star/delta activation, rewindable
SSM	Fault signal or collective fault signal
v	Speed
TrinkwV 2001	German Drinking Water Ordinance of 2001 (valid from 01.01.2003)

Abbreviation	Meaning
WRAS	Water Regulations Advisory Scheme (potable water approval for Great Britain and Northern Ireland)
WSK	Thermal winding contacts (in motor for monitoring the winding temperature, full motor protection through additional tripping unit)
η_M	Motor efficiency
Y/Δ	Star-delta switching
	Operating mode of double pumps: Individual operation of the respective duty pump
	Operating mode of double pumps: Parallel operation of both pumps
	Number of poles of electric motors: 2-pole motor = approx. 2900 rpm at 50 Hz
	Number of poles of electric motors: 4-pole motor = approx. 1450 rpm at 50 Hz
	Number of poles of electric motors: 6-pole motor = approx. 950 rpm at 50 Hz

General notes and abbreviations

Material	Meaning	AISI
1.0037	Steel S235JR	–
1.0308	Steel S235G2T	–
1.4021	Chromium steel X20Cr13	420
1.4057	Chromium steel X17CrNi16-2	431
1.4104	Chromium steel X12CrMoS17	430F
1.4112	Chromium steel X90CrMoV18	440B
1.4122	Chromium steel X39CrMo17-1	–
1.4301	Chromium-nickel steel X5CrNi18-10	304
1.4305	Chromium-nickel steel X8CrNiS18-9	303
1.4306	Chromium-nickel steel X2CrNi19-11	304L
1.4307	Chromium-nickel steel X2CrNi18-9	304L
1.4308	Chromium-nickel steel GX5CrNi19-10	304 CF8
1.4401	Chromium-nickel-molybdenum steel X5CrNiMo17-12-2	316
1.4404	Chromium-nickel-molybdenum steel X2CrNiMo17-12-2	316L
1.4408	Chromium-nickel-molybdenum steel GX5CrNiMo19-11-2	316
1.4409	Chrome nickel molybdenum steel X2CrNiMo19-11-2	316
1.4460	Chromium-nickel-molybdenum steel X3CrNiMoN 27-5-2	329
1.4462	Chromium-nickel-molybdenum steel X2CrNiMoN22-5-3	329 (2205)
1.4470	Chromium-nickel-molybdenum steel GX2CrNiMoN22-5-3	329
1.4517	Chromium-nickel-molybdenum steel with copper addition GX2CrNiMoCuN25-6-3-3	–
1.4541	Chromium-nickel steel with titanium addition X6CrNiTi18-10	321
1.4542	Chromium-nickel steel with copper and niobium additions X5CrNiCuNb16-4	630
1.4571	Chromium-nickel steel with titanium addition X6CrNiMoTi17-12-2	316Ti
1.4581	Chromium-nickel-molybdenum steel with niobium addition GX5CrNiMoNb19-11-2	316 / 316Nb
Ceram	Coating with very high adhesive strength for long-lasting corrosion protection	–
EN-GJL	Cast iron with lamellar graphite, also referred to as grey cast iron. The use of grey cast iron in domestic water systems is governed by the Drinking Water Directive 98/83/EC and applicable recognised technical rules and standards!	–
EN-GJL 200	Grey cast iron GG20	–
EN-GJL 250	Grey cast iron GG25	–

Material	Meaning	AISI
EN-GJS	Cast iron with spheroidal graphite, also referred to as spheroidal cast iron. The use of spheroidal cast iron in domestic water systems is governed by the Drinking Water Directive 98/83/EC and applicable recognised technical rules and standards!	–
FKM	Fluororubber (abbreviation FKM to DIN ISO 1629 and ASTM D 1418)	–
G-CuSn10Ni	Nickel-aluminium bronze	–
G-CuSn10	Zinc-free bronze	–
GG	See EN-GJL	–
GGG	See EN-GJS	–
NiAl-Bz	Nickel-aluminium bronze	–
Noryl	Fibreglass reinforced plastic	–
PC	Polycarbonate	–
SiC	Silicon carbide	–
St	Steel	–
St.vz.	Galvanised steel	–
V2A	Material group, e.g. 1.4301, 1.4306	304
V4A	Material group, e.g. 1.4404, 1.4571	316

Wear and tear

Pumps or parts of pumps are subject to wear in accordance with the current technical standards (DIN 31051/DIN-EN 13306). This wear may vary depending on the operating parameters (temperature, pressure, speed, water conditions) and the installation/usage situation and may result in the failure of the above products/components, including their electrical/electronic circuits, at different times.
Wear or wearing parts are all components subject to rotary or dynamic stress, including electronic components to which voltage is applied, including in particular:

- Gaskets (including mechanical seals), seal rings.
- Stuffing boxes.
- Bearings and shafts.
- Impellers and pump components.
- Thrust rings and wear rings.
- Wear rings / wear plates.
- Macerators.
- Condensers.
- Relays/contactors/switches.
- Electronic circuits, semiconductor components etc.

Pumps and continuous-flow machines (such as submersible mixers and recirculation pumps) and their coated components (cataphoretic, 2K or Ceram coating) are subject to constant wear due to the abrasive content of the fluids. For this reason the coating of these units is also counted as a wearing part!

We do not accept any liability for faults or defects arising from natural wear and tear.

Wilo – General Terms of Delivery and Service

The latest version of our General Terms of Delivery and Service can be found on the Internet at

www.wilo.com/agb

Pressure boosting

Resistance list for pumps of the Wilo-Multivert MVI/MVIE series 2.. to 16, Helix V/VE 2..-16.. and Wilo-Economy MHI/MHIE - series 2.. to 16..

This list makes no claim to completeness. The specifications concerning the application options of various pumping materials for pumping the fluids listed have been compiled to the best of our knowledge. They should however not be regarded as anything other than non-binding guidelines. **No guarantee claims whatsoever are to be derived therefrom.**
In practice, the fluids listed here are very rarely pumped as substances in pure form. Even minor admixtures of other substances could significantly influence or alter the chemically aggressive characteristics of a basic substance. Incrustations, the formation of condensate and temperature increases also generally have negative effects. In many cases, practical experience is required before a conclusion can be reached as to whether or not the suitability of a particular material is sufficient.

The information given refers to mean values of experience. In individual cases where the results of water analyses are available, other application limits are possible. Acidic pH values, coatings, H_2S, sulphides, chlorine gas, chloride, ClO_2, chlorates, thiosulphates and SO_2 have a weakening effect on the materials. Sulphates, oxygen in solution, trisodium phosphate, nitrate, nitrite, alkaline pH value and CO_2 saturation (acidic) generally have a protective effect on the materials.

Limited application limits apply to industrial water with pure chloride salts without additional protective salt contents; in case of doubt, please consult Wilo. For additives for aqueous solutions e.g. corrosion protection additives or biocides, the resistance to water must be taken into account.

Attention:
Viton in combination with water is only resistant up to max. 90 °C.

We request that the key and/or the remarks are taken into account when using the resistance list.
If you have any questions concerning the resistance of the Wilo-Multivert MVI/MVIE 16../32../52../70../95.. or Helix V/VE 2..-16.. series, please contact your sales and service office.

Remarks:
The properties of the fluid, such as density, solidification points, viscosity, etc. and/or explosion-protection regulations are to be taken into account additionally and separately in conjunction with this resistance list.
The application limits of the pumps in terms of pressure and temperature are to be taken into account.

Resistance list

	%	Temp. °C max.	1.4301 (AISI 304)		1.4404 (AISI 316 L)	
Fluid			**EPDM**	**Viton**	**EPDM**	**Viton**
Alkaline cleaner	–	–	•	–	•	–
Alcohol, see ethanol	–	–	•	–	•	–
Aluminium sulphate	10 %	25° [1]	–	–	–	•
Ammonia water (ammonium hydroxide)	100 %	80°	•	–	•	–
Ammonium chloride (salmiac)	15 %	60° [1]	–	–	•	–
Ammonium hydrogen carbonate	10 %	40° [1]	•	–	•	–
Ammonium sulphate	20 %	50° [1]	–	–	•	–
Antifrogen (HC basis)	40 %	70° [1]	•	•	•	•
Cider	–	60°	–	–	–	–
Petrol (explosion protection required)	–	25°	–	•	–	•
Benzoic acid	10 %	100°	–	–	–	•
Boric acid	Unsaturated solution	60° [1]	–	–	–	•
Brandy	< 40 alc.	60°	•	–	•	–
Butanol	–	60°	•	–	•	–
Buttermilk	–	–	-	–	–	–
Calcium acetate	Unsaturated solution	100° [1]	–	–	•	–

• = resistant, – = not resistant

[1] The temperature must not fall below the crystallisation temperature during operation and during starting

[2] Special GRD

[3] Explosion protection by the system operator required according to legal regulations, e.g. TRbF 50, section 6.3

[4] For copper processing, please consult Wilo

Pressure boosting

Resistance list

	%	Temp. °C max.	1.4301 (AISI 304)		1.4404 (AISI 316 L)	
Fluid			**EPDM**	**Viton**	**EPDM**	**Viton**
Calcium hydroxide	1 %	80°	–	–	–	•
Calcium nitrate	10 %	30° [1]	•	–	•	–
Deionic (fully desalinated water)	–	50°	–	–	•	–
Iron phosphate	–	–	–	–	–	–
Iron-II-sulphate	–	–	–	–	–	–
Iron-III-sulphate	–	–	–	–	–	–
Vinegar (wine vinegar)	10 %	60°	–	–	•	–
Acetic acid anhydride	–	25°	–	–	•	–
Ethanol (acethanol, alcohol) (explosion protection required)	–	60°	•	–	•	–
Ethylene glycol/diethylene glycol	40 %	70° [2]	•	•	•	•
Fixing bath	–	25°	–	–	–	•
Fruit juice	–	60°	–	–	–	•
Tannic acid	Unsaturated solution	Boiling point [1]	–	–	•	–
Glycerine	–	–	•	–	•	–
Glycol	–	–	–	–	–	–
Glycol-water	40 %	70° [2]	•	•	•	•
Uric acid	–	–	–	–	•	–
Hexane	–	40°	–	•	–	•
Isopropanol (explosion protection required) [3]	–	–	•	–	•	–
Potassium carbonate	Unsaturated solution	100° [1]	•	–	•	–
Potassium hydrogen carbonate	10 %	60° [1]	•	–	•	–
Potassium hydroxide	10 %	60°	•	–	•	–
Potassium nitrate	–	–	–	–	–	–
Potassium permanganate	Unsaturated solution	80° [1]	–	–	•	–
Potassium sulphate	Unsaturated solution	60° [1]	–	–	•	–
Milk of lime (calcium hydroxide)	10 %	80°	–	–	–	•
Kerosene (explosion protection required) [3]	–	25°	–	•	–	•
Copper sulphate	Unsaturated solution	60° [1]	–	–	–	•
Cooling lubricant [4]	–	80°	–	•	–	•
Liquor	–	60°	–	–	–	•
Magnesium sulphate	Unsaturated solution	< boiling temp. [1]	–	–	–	–

• = resistant, – = not resistant

[1] The temperature must not fall below the crystallisation temperature during operation and during starting

[2] Special GRD

[3] Explosion protection by the system operator required according to legal regulations, e.g. TRbF 50, section 6.3

[4] For copper processing, please consult Wilo

Pressure boosting

Resistance list

	%	Temp. °C max.	1.4301 (AISI 304)		1.4404 (AISI 316 L)	
Fluid			**EPDM**	**Viton**	**EPDM**	**Viton**
Maleic acid	50 %	60° [1]	–	–	–	•
Methanol (explosion protection required) [3]	–	60°	•	–	•	–
Methyl alcohol: Methanol (explosion protection required) [3]	–	60°	•	–	•	–
Lactic acid	Unsaturated solution	25° [1]	–	–	–	•
Miscella	–	60°	–	•	–	•
Sodium carbonate	10 %	60° [1]	•	–	•	–
Sodium hydroxide	25 %	20°	•	–	•	–
Sodium hydroxide	10 %	80°	•	–	•	–
Sodium nitrate	Unsaturated solution	80° [1]	•	–	•	–
Sodium phosphate	5 %	110° [1]	•	–	•	–
Sodium sulphate	–	–	–	–	–	–
Caustic lye of soda, see sodium hydroxide						
Fruit pulp (containing SO_2)	–	Boiling temp.	–	–	–	•
Oils:						
– Diesel oil (light, extra light) (explosion protection required) [3]	–	80°	–	•	–	•
– Crude oil (purified, without water)	–	80°	–	•	–	•
– Peanut oil	–	–	–	•	–	•
– Heating oil (light) (explosion protection required) [3]	–	–	–	•	–	•
– Heating oil (explosion protection required) [3]	–	120°	–	•	–	•
– Hydraulic oil	–	–	–	•	–	•
– Linseed oil	–	60°	–	•	–	•
– Linseed oil + 3 % H_2SO_4	–	60°	–	–	–	•
– Maize oil	–	100°	–	•	–	•
– Mineral oil	–	80°	–	•	–	•
– Rapeseed oil	–	100°	–	•	–	•
– Caster oil	–	100°	–	•	–	•
– Lubricating oil	–	–	–	•	–	•
– Cutting oil [4]	–	–	–	•	–	•
– Silicon oil	–	100°	–	•	–	•
– Soya bean oil	–	100°	–	•	–	•
– Cooking oil	–	100°	–	•	–	•
– Turpentine oil (explosion protection required) [3]	–	60°	–	•	–	•

• = resistant, – = not resistant

[1] The temperature must not fall below the crystallisation temperature during operation and during starting

[2] Special GRD

[3] Explosion protection by the system operator required according to legal regulations, e.g. TRbF 50, section 6.3

[4] For copper processing, please consult Wilo

Pressure boosting

Resistance list

	%	Temp. °C max.	1.4301 (AISI 304)		1.4404 (AISI 316 L)	
Fluid			**EPDM**	**Viton**	**EPDM**	**Viton**
– Turbine oil (no SDF oils)	–	100°	–	•	–	•
Oil-water mixtures	10 %	250°	–	•	–	•
Oxalic acid	–	–	–	–	–	–
Paraffin(s)	–	–	–	•	–	•
Paraffin (explosion protection required) [3]	–	–	–	•	–	•
Phosphoric acid	10 %	85°	–	–	–	•
Polyglycols	–	90° [2]	–	•	–	•
Polyethylene glycols	40 %	70° [2]	•	•	•	–
2-propanol		60°	•	–	•	–
Pulp, see fruit pulp						
Salicylic acid	Unsaturated solution	25° [1]	–	–	•	–
Aqueous ammonia (ammonium hydroxide)	100 %	80°	•	–	•	–
Sulphuric acid	5 %	25°	–	–	–	•
Sulphuric acid	2.50 %	60°	–	–	–	•
Sulphurous acid (saturated)	–	20° [1]	–	–	–	•
Safety coolant (e.g. Freon, difluorodichloromethane and others, anhydrous)	–	–	–	–	–	–
Trisodium phosphate	10 %	Boiling temp. [1]	•	–	•	–
Toluene	–	–	–	–	–	–
Alk. washing liquid (bottle rinsing)	10 %	80°	•	–	•	–
Alk. washing liquid (metal degreasing)	10 %	80°	–	•	–	•
Water						
– Swimming-pool water (no brine)	–	35°	•	–	•	–
– Deionic (fully desalinated water)	–	50°	–	–	•	–
– Distilled water	–	50°	–	–	•	–
– Decarbonated water	–	–	–	–	•	–
– Softened water	–	–	–	–	•	–
– Firefighting water	–	–	•	–	•	–
– Heating water	–	–	•	–	•	–
– Boiler water (dH < 11.5)	–	–	•	–	•	–
– Boiler feed water, completely desalinated	–	–	–	–	•	–
– Condensate (pH < 4.5)	–	–	–	–	•	–
– Tap water	–	–	•	–	•	–

• = resistant, – = not resistant

[1] The temperature must not fall below the crystallisation temperature during operation and during starting

[2] Special GRD

[3] Explosion protection by the system operator required according to legal regulations, e.g. TRbF 50, section 6.3

[4] For copper processing, please consult Wilo

Pressure boosting

Resistance list						
	%	Temp. °C max.	1.4301 (AISI 304)		1.4404 (AISI 316 L)	
Fluid			**EPDM**	**Viton**	**EPDM**	**Viton**
– Pure water	–	–	•	–	•	–
– Ultrapure water (electronics, etc.)	–	–	–	–	•	–
– Supply water see boiler water and boiler feed water						
– Rinsing water	–	–	•	–	•	–
– Partially desalinated water, see decarbonated water						
– Fully desalinated water, see deionic						
– Soft water see decarbonated water						
Other waters:						
– Boiler feed water, partially desalinated	–	–	•	–	•	–
– Cooling water	–	–	•	–	•	–
– Untreated water (suspended solids < 10 ppm)	–	–	•	–	•	–
– Potable water	–	–	•	–	•	–
Wine (white, red)	–	–	–	–	•	–
Tartaric acid	Unsaturated solution	60° [1]	–	–	–	•
Citric acid	5 %	25° [1]	–	–	•	–
Sugar juice (solution) susp. s < 20 ppm	–	–	–	–	•	–

• = resistant, – = not resistant

[1] The temperature must not fall below the crystallisation temperature during operation and during starting

[2] Special GRD

[3] Explosion protection by the system operator required according to legal regulations, e.g. TRbF 50, section 6.3

[4] For copper processing, please consult Wilo

General notes

Information for the pump curve graph

Pressure boosting

Wilo-Helix V (example; pump speed constant)

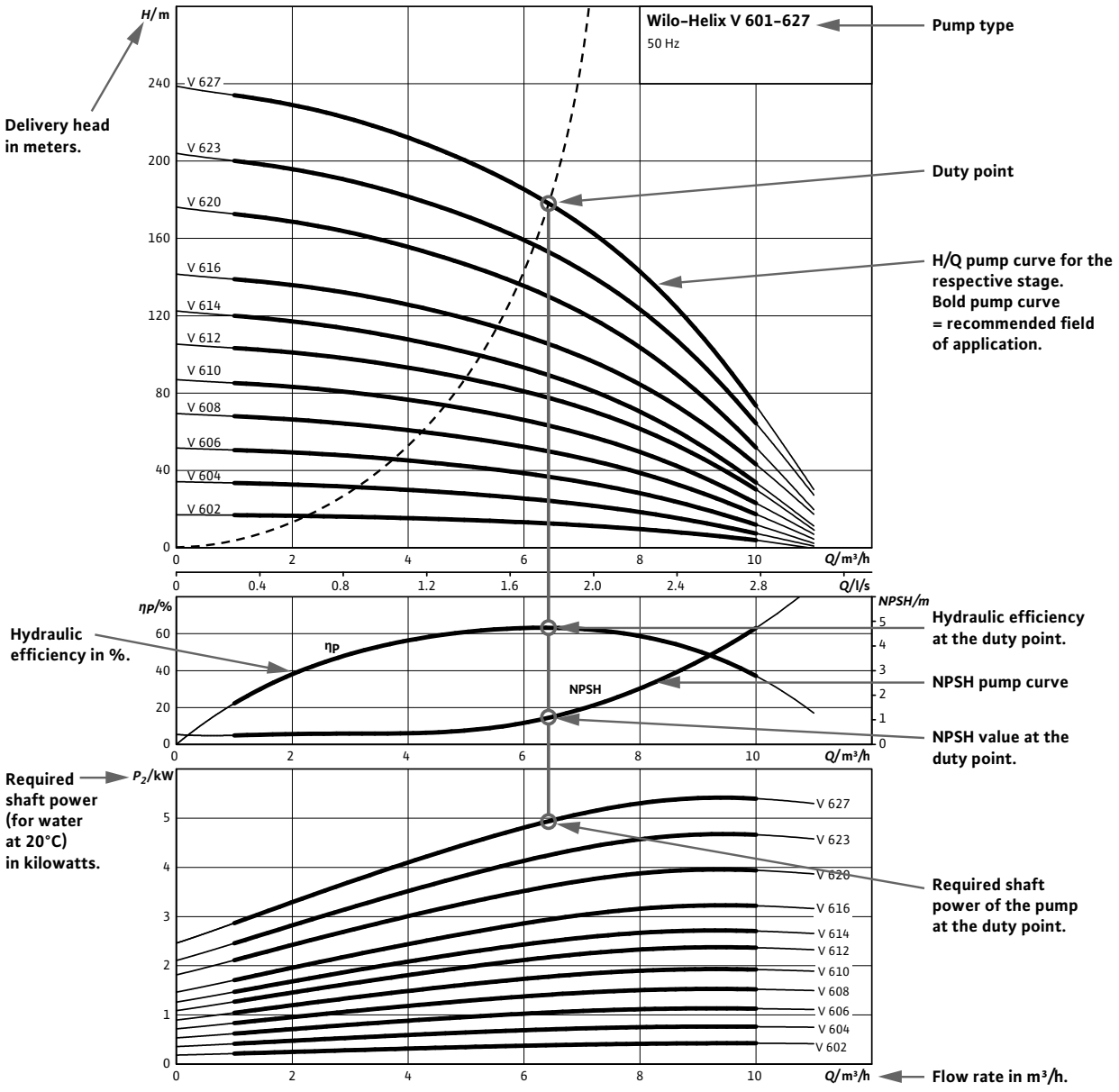

Pressure boosting

Wilo-Helix VE (example; pump speed-controlled)

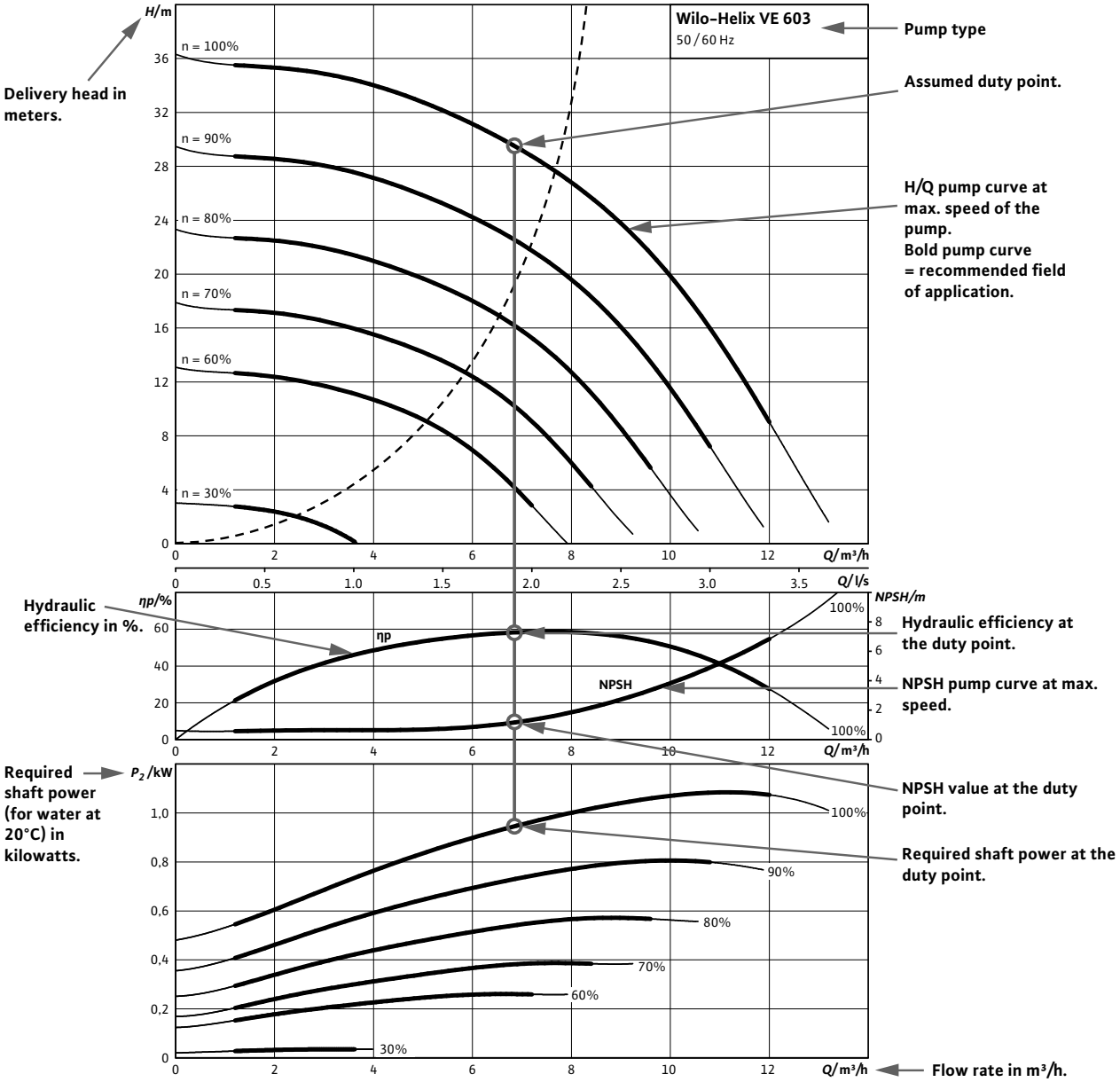

General notes

Information for the pump curve graph

Pressure boosting

Wilo-Comfort CO/COR Helix V../CC (example; contained pumps speed constant)

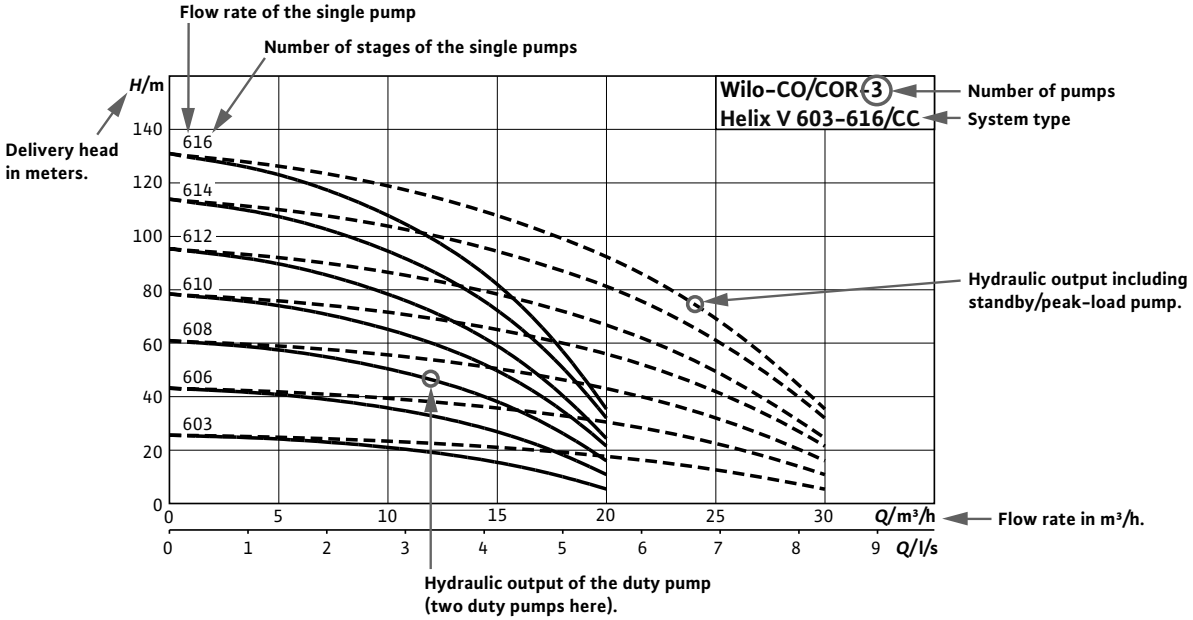

Duty chart diagram shows the operation of a pressure boosting system with 3 uncontrolled pumps.

Pressure boosting

Wilo-Comfort-VarioCOR Helix VE../VR (example; contained pumps speed-controlled)

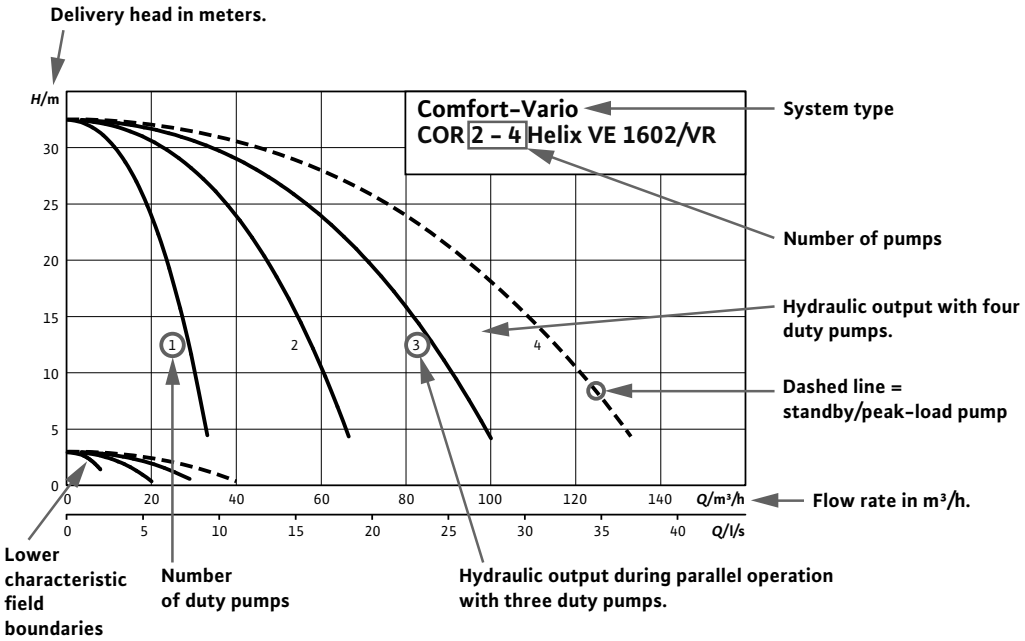

Duty chart diagram shows the operation of a pressure boosting system with 2-4 controlled pumps.

General notes

Information for the pump curve graph

Fire fighting

Wilo-EMU KM 750 (example)

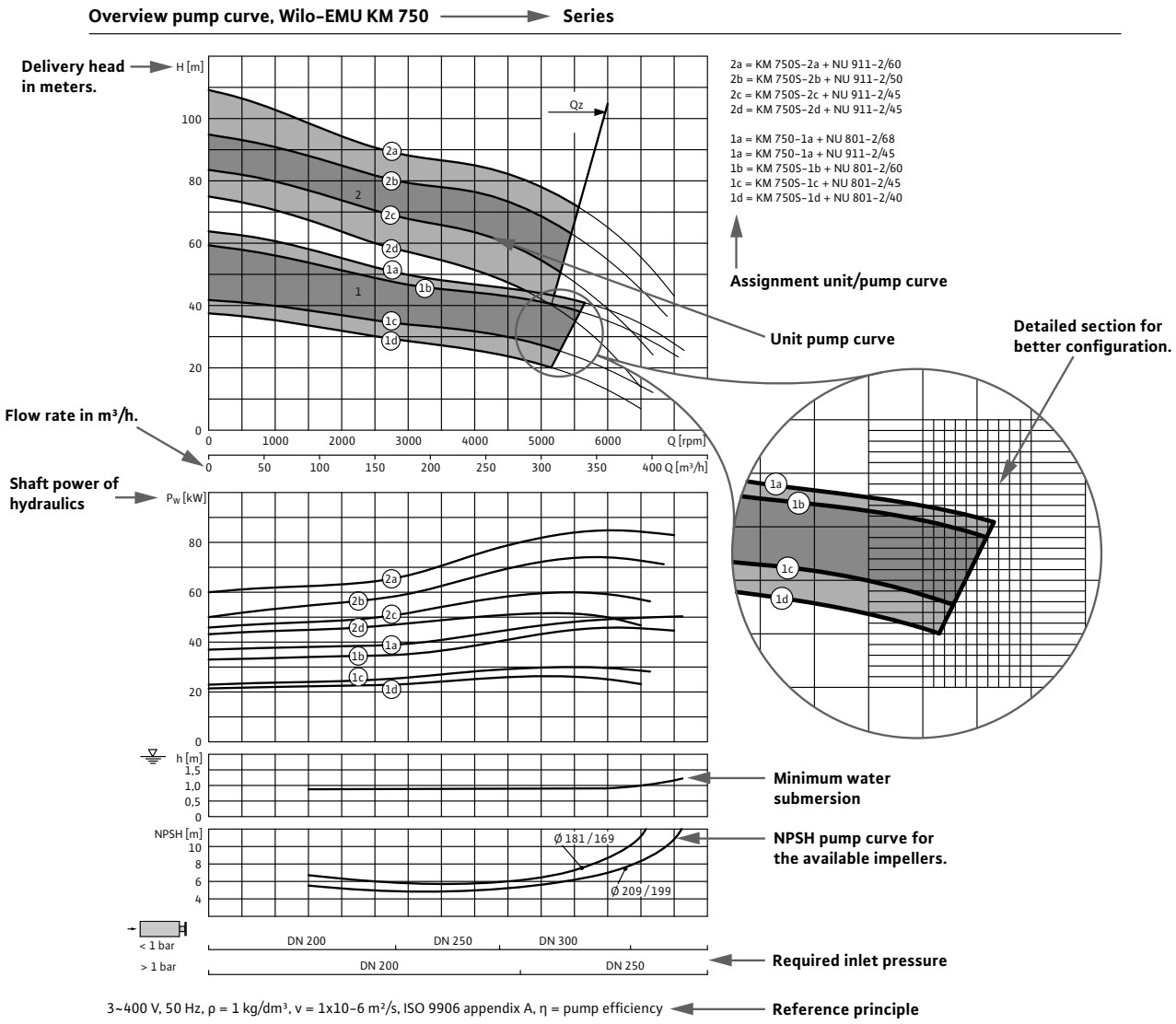

Raw water intake

Wilo-Sub TWU 4-04.. (Example)

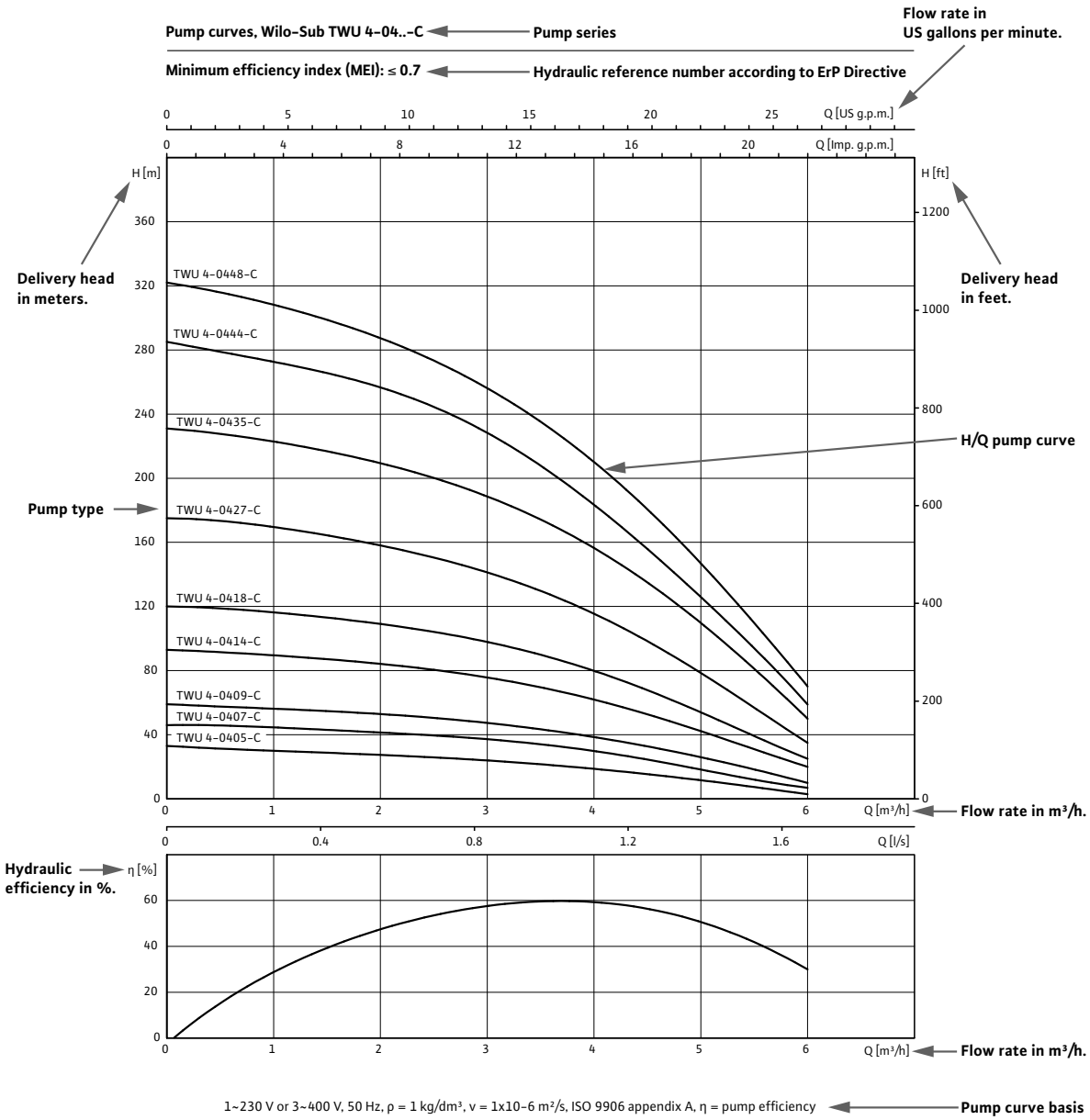

Rainwater utilisation

Pump systems with system separation

Series overview

Series	**Wilo-RainSystem AF Basic**	**Wilo-RainSystem AF Comfort**
Product photo		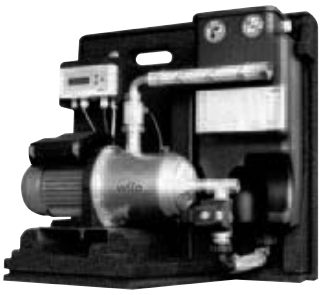
Duty chart	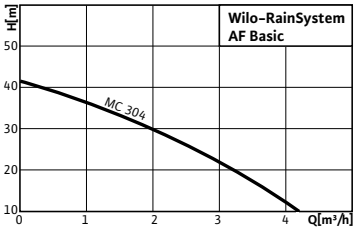	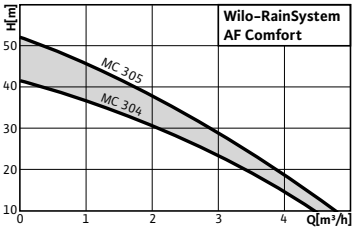
Design	Ready-to-plug rainwater utilisation system	Ready-to-plug rainwater utilisation system
Application	Rainwater utilisation for saving potable water in conjunction with cisterns or tanks	Rainwater utilisation for saving potable water in conjunction with cisterns or tanks
H_{max}	42 m	52 m
Q_{max}	5 m^3/h	5 m^3/h
Special features/ product advantages	• Compact, ready-to-plug rainwater utilisation system • Low-noise through multi-stage centrifugal pump • In compliance with DIN 1989 and EN 1717 • High economic efficiency due to needs-based fresh water replenishment • Flow and noise-optimised replenishment reservoir • All parts that come in contact with the fluid are corrosion-free • Optional connection of a back-up pump	• Compact, ready-to-plug rainwater utilisation system • In compliance with DIN 1989 and EN 1717 • Tested according to RAL-GZ 994 quality standard • Low-noise, due to multi-stage centrifugal pump and complete encapsulation of the system • Automatic support function for – Evacuation of air in the suction line – High economic efficiency due to needs-based potable water replenishment
Further information	Series information from page 28 Wilo online catalogue at www.wilo.com	Series information from page 29 Wilo online catalogue at www.wilo.com

Rainwater utilisation

Pump systems with system separation

Series overview

Series	**Wilo-RainSystem AF 150**	**Wilo-RainSystem AF 400**	**Wilo-RWN 1500**
Product photo			
Duty chart	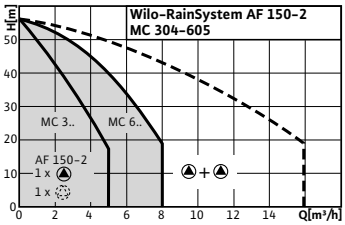	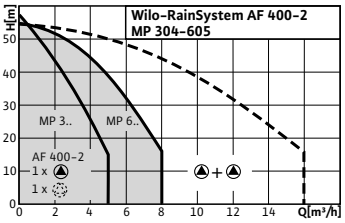	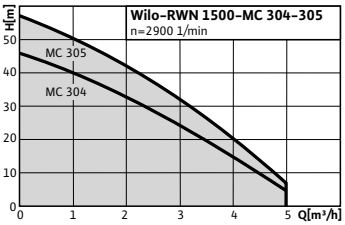
Design	Automatic rainwater utilisation system with run-down tank and 2 self-priming pumps	Automatic rainwater utilisation system with run-down tank container and 2 non-self-priming pumps	Ready-to-plug rainwater utilisation system with rainwater tank
Application	Rainwater utilisation in multi-family houses and small trade businesses for saving potable water in conjunction with cisterns or tanks	Commercial and industrial rainwater utilisation for conserving potable water as a hybrid system in conjunction with rainwater storage tanks or vessels	Rainwater utilisation in single-family houses for conserving potable water as a complete system for installation within the building. Fields of application e.g.: • Toilet flushing • Sprinkling/irrigation • Supplying washing machines • Secondary cleaning purposes • Other non-potable water applications
H_{max}	55 m	55 m	55 m
Q_{max}	16 m^3/h	16 m^3/h	5 m^3/h
Special features/ product advantages	• Low-noise due to multistage centrifugal pumps • IE2-IEC three-phase AC motor (≥ 0.75 kW) • All parts that come in contact with the fluid are corrosion-free • Maximum operational safety due to fully electronic RainControl Professional controller • High economic efficiency due to fresh water replenishment according to requirements • High reliability due to DVGW-certified, flow- and noise-optimised replenishment reservoir • Systems with three to six pressure boosting pumps on request or see chapter Wilo pressure boosting systems. Control of a single-phase cistern pump on request.	• Low-noise due to standard multistage centrifugal pumps • All parts that come in contact with the fluid are corrosion-free • Highest operational reliability thanks to fully electronic Rain-Control Hybrid controller • High economic efficiency due to needs-based fresh water replenishment • High reliability thanks to flow- and noise-optimised overall concept • Automatic control of the feeding pump • System / level control in the low-volt range • Approved according to the quality specifications of the RAL quality standard GZ 994	• Low-noise, self-priming pump ensures almost noiseless system operation • Corrosion-free • Can be expanded at any time • Multi-tank system with replenishment and settling zone for better water quality • Greatest possible connection flexibility, due to rotating rainwater inlet • Particularly suitable for retrofitting existing buildings
Further information	Series information from page 31 Wilo online catalogue at www.wilo.com	Series information from page 35 Wilo online catalogue at www.wilo.com	Series information from page 39 Wilo online catalogue at www.wilo.com

Rainwater utilisation

Pump systems with system separation

Equipment/function

	Wilo				
	RainSystem AF	**RainSystem AF**	**RainSystem AF**	**RainSystem AF**	**RWN 1500**
Design					
Compact rainwater utilisation system	•	•	–	–	–
Replenishment reservoir	11	11	150	400	1500
Corrosion-free	•	•	•	•	•
Protection against low water level	•	•	•	•	•
UV-stabilized system tank	•	•	•	•	•
Diaphragm pressure vessel	–	–	•	•	–
Connection for backflow warning	•	•	•	–	–
Corrosion-free steel tubing framework	–	–	•	•	–
Ball valve on suction and pressure sides	–	–	• (not for connection to rainwater storage tank)	•	–
Joint tubing on pressure side	–	–	•	•	–
Pressure gauge	•	–	•	•	•
Hydraulics					
Self-priming	•	•	•	–	•
Non-self-priming	–	–	Optional	•	Optional
Multistage centrifugal pump	•	•	•	•	•
Directly flanged motor	•	•	•	•	•
Motor data					
Mains connection	1~230 V, 50 Hz	1~230 V, 50 Hz	1~230 V, 50 Hz	3~400 V, 50 Hz	1~230 V, 50 Hz
Equipment/function					
Electronic control, RainControl Professional	–	–	•	–	–
Electronic system control, RainControl Hybrid	–	–	–	•	–
Menu-prompted operation and LCD display	–	•	•	–	–
Operation and fault signals	•	•	•	•	•
Wilo-Fluidcontrol (for automatic operation)	•	–	–	–	•
Pump cycling and test run function	–	–	•	•	–
Automatic fault-actuated switchover and peak-load cut-in	–	–	•	•	–
Automatic water exchange in the replenishment reservoir	•	•	•	•	–
Automatic prevention of lime deposits on the solenoid valve	–	•	•	–	–
Permanent display of rainwater storage tank level, system pressure, operating status via LCD	–	•	–		–
Accessories					
Operating hours counter	–	–	–		–
Individual run and fault signals	–	–			–
Water backflow signalling device			•	–	–
Extension modules	–	–	–	•	–
EPP cap		•	–	–	–
Overflow signalling device	•		–	•	–

• = available, – = not available

Technical data Wilo-RainSystem/Rain-Collector

	Wilo				
	RainSystem AF Basic	**RainSystem AF Comfort**	**RainSystem AF 150**	**RainSystem AF 400**	**RWN 1500**
Approved fluids (other fluids on request)					
Pure water without settling sediment	•	•	•	•	•
Rainwater	•	•	•	•	•
Output					
Max. suction head m	8	8	8	–	8
Nominal motor power W	550	550 750	550 750 1100	550 750 1100	550 750
Start-up pressure	1.5 bar	1.2 bar	variably adjustable starting from 1.0 bar		1.5 bar
Switch-off pressure	2.2 bar	4.0 bar	variably adjustable starting from 1.0 bar		2.2 bar and less than 0.6 l/min volume flow
Fluid temperature °C	+5...+35	+5...+35	+5...+35	+5...+35	+5...+35
Max. ambient temperature °C	40	40	40	40	40
Mains connection	1~230 V, 50 Hz	1~230 V, 50 Hz	1~230 V, 50 Hz	3~400 V, 50 Hz	1~230 V, 50 Hz
Replenishment reservoir l	11	11	150	400	1500
Gross weight kg	26	26	96	119	142
Motor/electronics					
Protection class	IP 42	IP 54	IP 41	IP 54	IP 54
Insulation class	F	F	F	F	F
Connections					
Pressure pipe/pressure side	Rp 1	Rp 1	Joint tubing R 1½	Joint tubing R 1½	Hose 1"
Inlet connection	–	–	–	–	–
Nominal diameter of pipe connections on suction side	–	–	–	–	–
Inlet	R ¾	R ¾	R $1^1/_4$ [1]	[2]	HT 100
Connection overflow [DN]	70	70	100	100 [3]	2 x HT 100
Expansion ports	–	–	–	–	2 x HT 100
Materials					
Pump housing	1.4301	1.4301	1.4301	1.4301	1.4301
Impeller	Noryl	Noryl	Noryl	Noryl	Noryl
Pump shaft	1.4028	1.4028	1.4028	–	1.4028
Mechanical seal	Carbon/ceramic	Carbon/ceramic	Carbon/ceramic	Carbon/ceramic	Carbon/ceramic
Stage chambers	Noryl	Noryl	Noryl	Noryl	Noryl

• = available, - = not available

[1] Potable water replenishment via float valve with free outlet in accordance with EN 1717
[2] Potable water replenishment via free inlet in accordance with EN 1717 (make-up funnel and non-turbulent supply line integrated on the tank side).
Rainwater storage pump connection: Connecting piece d.50 (inlet integrated with non-turbulent supply line on the tank side)
[3] with overflow siphon as anti-syphon trap and full passage in accordance with DIN 1986)Overall system protection class:

Rainwater utilisation

Pump systems with system separation

Series description Wilo-RainSystem AF Basic

Type key

Example **Wilo-AF Basic MC 304 EM**

AF	Automatic rainwater utilisation and potable water replenishment system (Aqua Feed)
MC	Self-priming, horizontal, multistage centrifugal pump of the series MultiCargo MC
3	Volume flow (m^3/h) at optimum efficiency
04	Number of stages
EM	Single-phase motor 1~230 V, 50 Hz

Application

Rainwater utilisation for saving potable water in conjunction with rainwater storage tanks or reservoirs

- Toilet flushing
- Sprinkling/irrigation
- Supplying machines
- Secondary cleaning purposes
- Other non-potable water applications

Equipment/function

- Connection-ready module with compact construction
- Electrical and hydraulic connections already in place, mounted on corrosion-protected base frame.
- Comprising:
  - Self-priming, corrosion-free, low-noise MultiCargo MC centrifugal pump
  - Pressure-side pipework R 1
  - Potable water replenishment reservoir (11 l) with float valve
  - 1.8 m connection cable and mains plug
  - Rain Control Basic RCB switchgear with control electronics as well as flow monitor / pressure controller
  - 3-way valve and float switch with 20 m cable for monitoring rainwater storage tank levels
  - Connection for overflow warning

Description/design

- Ready-to-plug single-pump water-supply unit as compact module for single-family houses
- Fully automatic supply of rainwater from an underground storage tank or rainwater storage
- 11-litre replenishment reservoir for optimised replenishment of potable water into the consumer network when rainwater storage tank is not full
- System fulfils the criteria outlined in DIN 1989 and EN 1717
- Automatic switchover to potable water replenishment, time-dependent water exchange in replenishment reservoir, integrated automatic shutdown in the event of dry running.
- System control RainControl Basic RCB with FluidControl

Options

- Overflow signalling device
- Cover made of EPP

Scope of delivery

- Ready-to-connect rainwater utilisation system with fixation material installation sketch, Installation and operating instructions and packaging

Series description Wilo-RainSystem AF Comfort

Type key

Example **Wilo-AF Comfort MC 304 EM**

AF	Automatic rainwater utilisation and potable water replenishment system (Aqua Feed)
MC	Self-priming, horizontal, multistage centrifugal pump of the series MultiCargo MC
3	Volume flow (m^3/h) at optimum efficiency
04	Number of stages
EM	Single-phase motor 1~230 V, 50 Hz

Application

Hybrid system for commercial and industrial rainwater utilisation for saving potable water in conjunction with rainwater storage tank or reservoirs

Equipment/function

- Connection-ready module with compact construction
- Electrical and hydraulic connections already in place, mounted on corrosion-protected base frame.
- Comprising:
  - Self-priming, corrosion-free, low-noise MultiCargo MC centrifugal pump
  - Pressure-side pipework R 1
  - Potable water replenishment reservoir (11 l) with float valve
  - Cover made of EPP
  - 3.0 m connecting cable and mains plug
  - Rain Control Economy RCE central switchgear with control electronics including solenoid valve and pressure transmitter, 4-20 mA and level sensor with 20 m cable for level indicator
  - Connection for overflow signalling device and/or backflow warning as standard
  - Menu-prompted operation and LCD display
  - Operation and fault signals
  - Automatic water exchange in the replenishment reservoir
  - Automatic prevention of lime deposits on the solenoid valve
  - Permanent display of rainwater storage tank level, system pressure, operating status via LCD

Description/design

- Ready-to-plug single-pump water-supply unit as compact module for single-family houses
- Fully automatic supply of rainwater from an underground storage tank or rainwater storage
- 11-litre replenishment reservoir for optimised replenishment of potable water into the consumer network when rainwater storage tank is not full
- System fulfils the criteria outlined in DIN 1989 and EN 1717
- Automatic switchover to potable water replenishment, time-sensitive water exchange in replenishment reservoir, built-in automatic switch-off during dry run.
- AF Comfort system control: RainControl Economy RCE electronic control device with additional functions such as:
  - Automatic solenoid valve actuation to prevent lime deposits
  - Variable switch-off pressure
  - Commissioning with factory-configured basic parameters (plug & pump)
  - Continuous logging of operating data
  - Economy mode function
  - Operating status log
  - Operation and parameterisation by means of menu-driven function keys
- Cover

Options

- Overflow signalling device

Scope of delivery

- Heavy-duty, ready-to-connect single-pump rainwater utilisation system with 3.0 m connecting cable and mains plug, RainControl Economy central switchgear with control electronics, level sensor with 20 m cable, measurement range 0-5 m
- **Including cover** and connection kit for replenishment overflow made of recyclable EPP

Pump curves, dimensions for Wilo-RainSystem AF Basic and AF Comfort

Pump curves

Wilo-RainSystem AF Basic

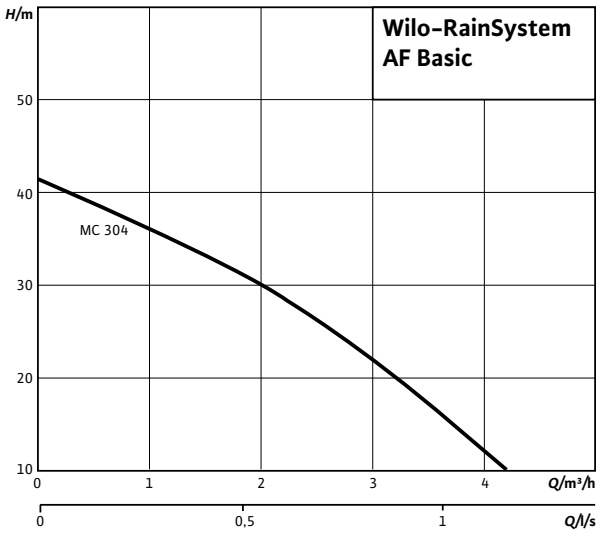

Pump curves

Wilo-RainSystem AF Comfort

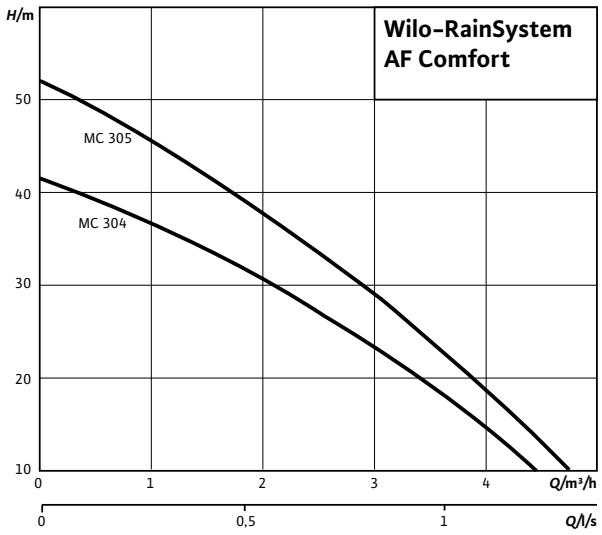

Dimension drawing

Wilo-RainSystem AF Basic

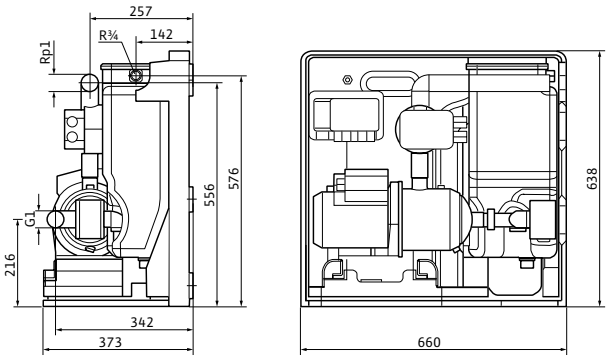

Dimension drawing

Wilo-RainSystem AF Comfort

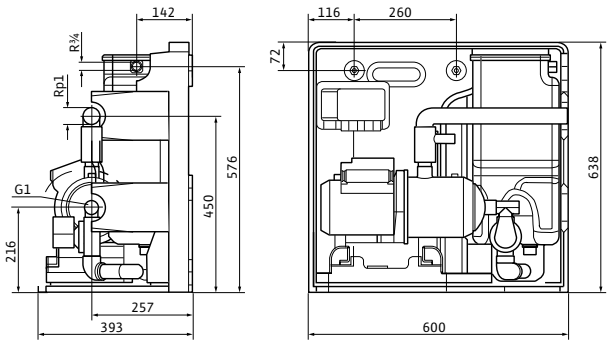

Series description Wilo-RainSystem AF 150

Type key

Example	**Wilo-AF 150-2 MC 304 EM**
AF	Automatic rainwater utilisation and potable water replenishment system (Aqua Feed)
150	Nominal capacity replenishment reservoir (hybrid tank) (l)
2	Number of pumps
MC	Self-priming, horizontal, multistage centrifugal pump of the series MultiCargo MC
3	Volume flow (m^3/h) at optimum efficiency
04	Number of stages
EM	Single-phase motor 1~230 V, 50 Hz

Equipment/function

Connection-ready module with compact construction, electrical and hydraulic connections already in place, mounted on vibration-insulated painted steel pipe frame, comprising:

- 2 self-priming, corrosion-free, low-noise MultiCargo MC series centrifugal pumps
- Pressure-side R 1 1/2 joint tubing including transmitter unit with DIN/DVGW-certified 8 l diaphragm pressure vessel with flow-through design and shut-off device with drain
- Pressure gauge 0 - 10 bar
- Ball valve on suction and pressure side
- Large-volume fresh water replenishment reservoir (150 litre) with mechanical float valve
- RainControl Professional central switchgear with control electronics including solenoid valves, pressure transmitter 4–20 mA and level sensor with 20 m cable for monitoring levels
  - Menu-prompted operation and LCD display of run/fault signals
  - Steady system control by means of cyclical pump cycling and integrated test run on idle pumps
  - Automatic fault-actuated switchover and peak-load cut-in
  - Automatic water exchange in the replenishment reservoir
  - Automatic protection of the solenoid valve against lime deposits
  - Permanent display of rainwater storage tank level, system pressure and operating status via LCD

Description/design

- Connection-ready double pump water-supply unit as compact module for multi-family houses and public buildings
- For fully automatic supply of rainwater from an underground tank or rainwater storage.
- High operating reliability through the use of two separately guided suction lines (to be provided onsite).
- Large-volume, DVGW-certified replenishment reservoir for needs-based replenishment of potable water into the consumer network when rainwater storage is not full
- Standard-equipped with connection for back-up warning
- Cross-flow diaphragm pressure vessel per DIN 4807 for saving energy when there is minor leakage at the building site
- Consistent system control is achieved through cyclical pump cycling and an integrated test run when the pumps are at rest
- Automatic fault-actuated switchover and peak-load cut-in ensure maximum system readiness
- Potable water replenishment is fully automatic and demand-optimised
- Pump-operation-dependent water replacement in the replenishment reservoir is also performed automatically.
- With integrated electronic motor protection, integrated dry-running protection system for pump unit as well as automatic protection of the solenoid valve against lime deposits
- Control device displays wide range of signals; it is also equipped with potential-free contacts for collective run signals and collective fault signals
- Operation and parameterisation of the fully electronic RainControl Professional controller is performed by means of menu-driven function keys
- Permanent display of rainwater storage level, system pressure and operating status is shown via LCD
- System is ideal for connection to building automation system

Options

- Operating hours counter
- Individual run/fault signals
- Water backflow signalling device

Scope of delivery

- Two self-priming, MC multistage centrifugal pumps
- 150 l fresh water replenishment reservoir, transmitter unit with 8 l diaphragm pressure vessel,
- RainControl Professional central switchgear with control electronics, level sensor
- With 20 m cable, measurement range 0-5 m.

Pump curves, motor data, dimensions Wilo-RainSystem AF 150

Wilo-RainSystem AF 150-2MC 304 - 305

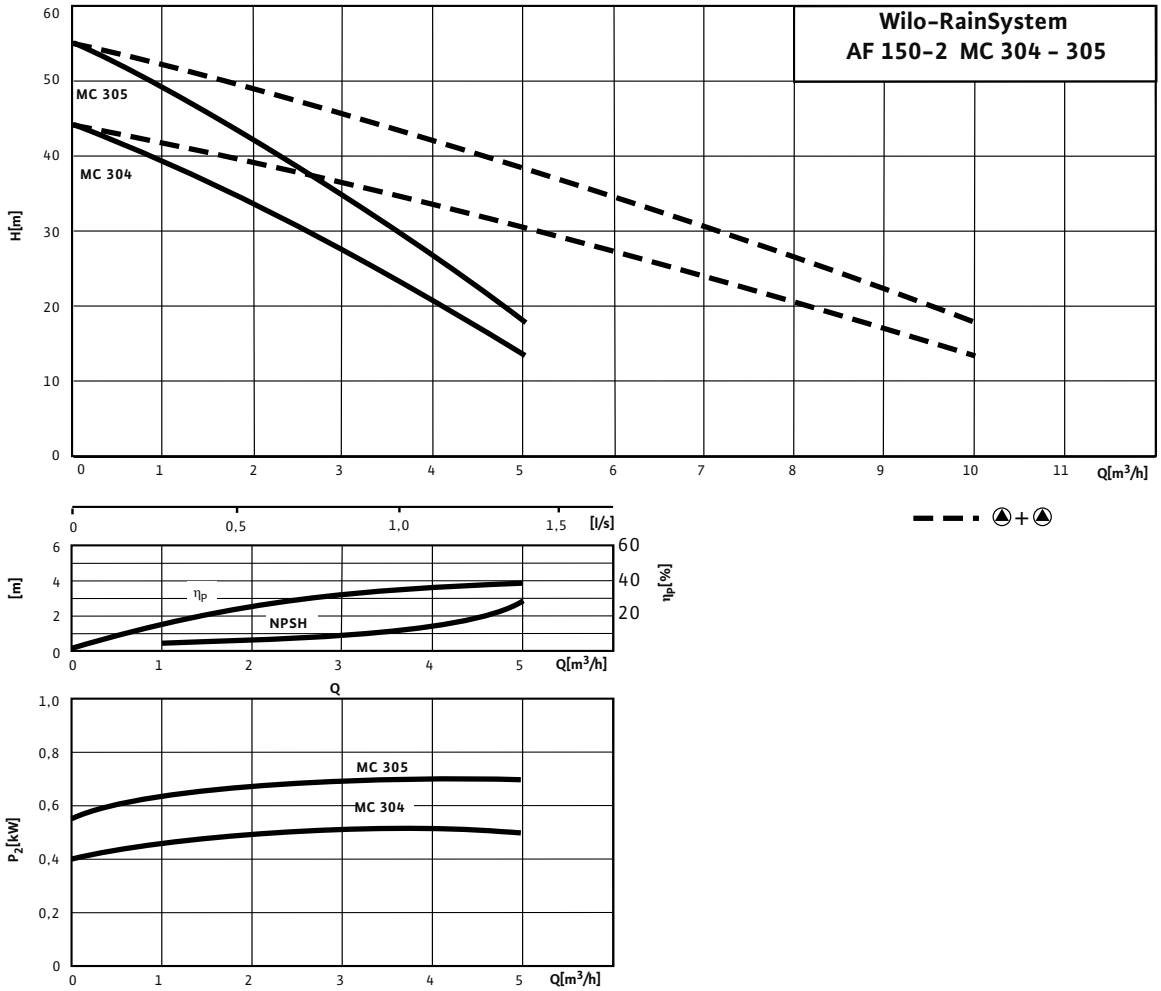

Pump curves, motor data, dimensions Wilo-RainSystem AF 150

Wilo-RainSystem AF 150 -2 MC 604 - 605

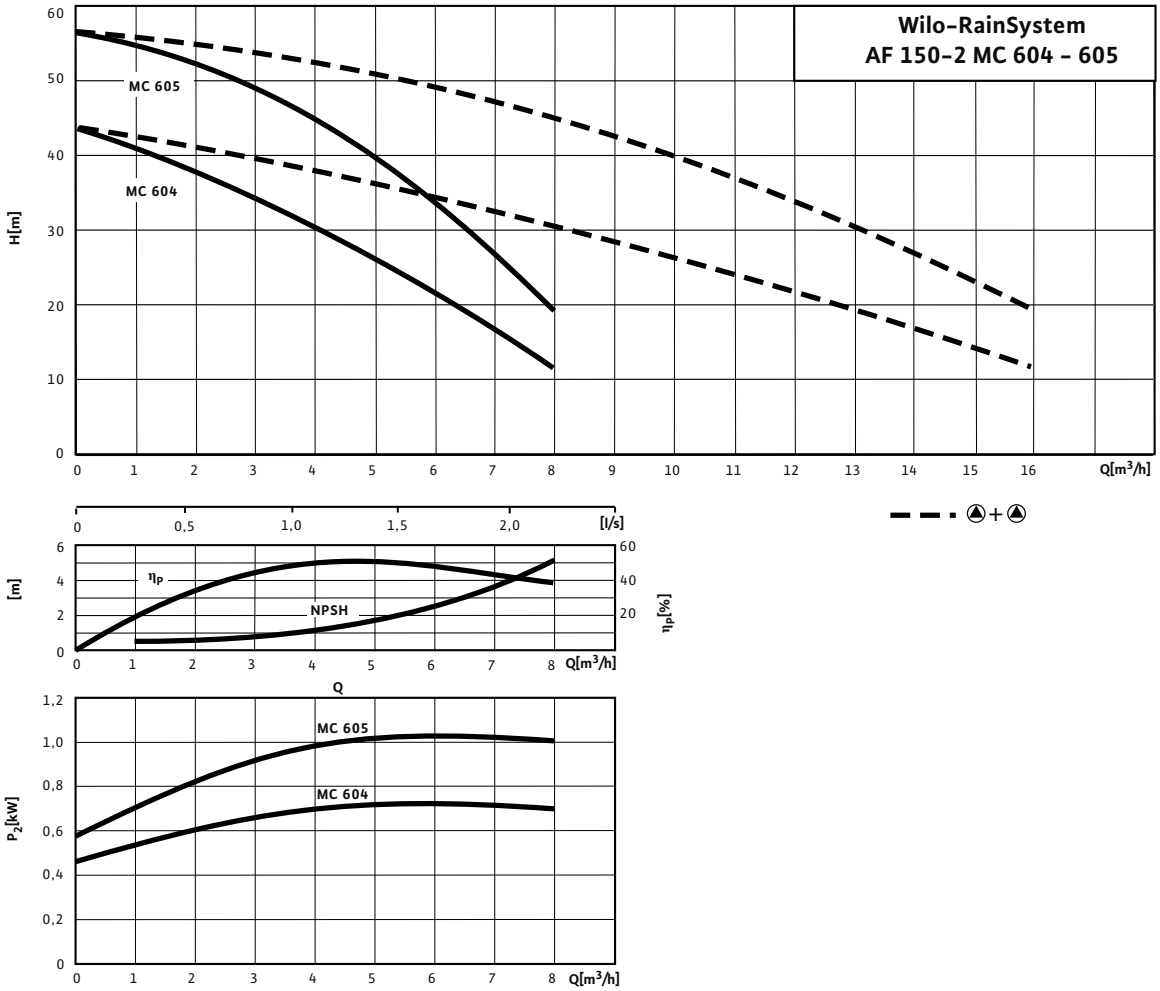

Motor data				
Wilo-RainSystem AF ...	**Number of pumps per system**	**Number of stages**	**Nominal motor power**	**Nominal current**
			P_2	I_N
			kW	A
150-2 MC 304 (1~)	2	4	0.55	4
150-2 MC 305 (1~)	2	5	0.75	5.4
150-2 MC 604 (1~)	2	4	1.1	6.7
150-2 MC 605 (1~)	2	5	1.1	7.6

Motor efficiency based on 400 V, 50 Hz

Dimensions RainSystem AF 150

Dimension drawing

Wilo-RainSystem AF 150 -2 MC 304 - 605

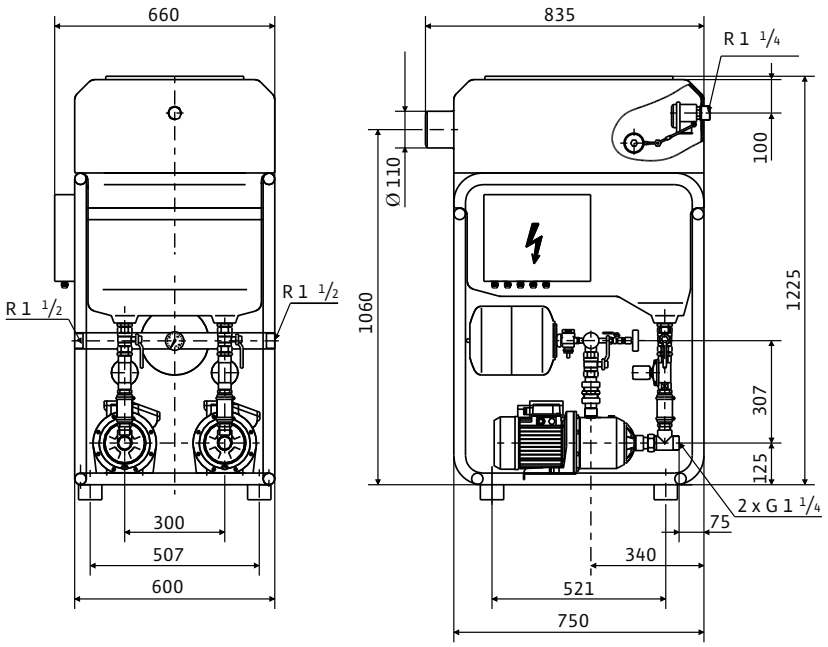

Series description Wilo-RainSystem AF 400

Type key

Example	**Wilo-AF 400-2 MP 304 EM**
AF	Automatic rainwater utilisation and potable water replenishment system (Aqua Feed)
400	Nominal capacity replenishment reservoir (hybrid tank) (l)
2	Number of pumps
MP	Self-priming, horizontal, multistage centrifugal pump of the series MultiCargo MP
3	Volume flow (m^3/h) at optimum efficiency
04	Number of stages
EM	Single-phase motor 1~230 V, 50 Hz

Equipment/function

- Connection-ready module with compact construction
- Completely connected, electrically and hydraulically, and mounted on vibration-insulated baseplate, comprising:
  - 2x non-self-priming, corrosion-free, low-noise centrifugal pumps of the MultiPress series
  - R 11/2 joint tubing on the pressure side, including transmitter unit with DIN/DVGW-certified 8-l diaphragm pressure vessel following the flow-through principle and shut-off device with draining, manometer 0–10 bar
  - Ball valve on suction and pressure side and non-return valve with DIN/DVGW approval
  - High-volume hybrid tank with all connections, calmed inlets and overflow with siphon
  - RainControl Hybrid central switchgear with control electronics, 4–20 mA pressure transmitter, as well as level control device in the low-volt range
  - Signals concerning operation and faults
  - Steady system control by means of cyclical pump cycling and integrated test run on idle pumps
  - Automatic fault-actuated switchover and peak-load cut-in
  - Automatic water exchange in the replenishment reservoir
  - Permanent display of rainwater storage tank level, system pressure, operating status via LCD (optional)
  - Including DVGW-certified R 1 solenoid valve for the potable water replenishment

Description/design

- Ready-to-connect water-supply unit with 2 to 4 water-supply pumps as compact module for commercial and industrial rainwater utilisation
- For fully automatic supply with rainwater from ground reservoir or rainwater storage tank using submersible pumps as feeding pumps
- Depending on the pump dimensioning, greater distances between the system and rainwater storage tank can be bridged over with this hybrid system (see also Wilo submersible pumps, Wilo-Drain series)
- High-volume hybrid tank with all integrated functions offers needs-based replenishment of potable water in the consumer network when rainwater storage tanks are not full.
- Fully-electronic control unit for controlling the water supply and cistern pump, equipped with main switch, control switch for each pump with Manual-0-Automatic function and display of the operating status operation/fault for each pump as well as low-water display
- Depending on the pressure, pumps are switched on/off in cascade according to water demand.
- Diaphragm pressure vessel for energy savings in the event of smallest leakages in buildings
- Steady system control by means of cyclical pump cycling and integrated test run on idle pumps.
- Automatic fault-actuated switchover and peak-load cut-in guarantee maximum system availability.
- In the event of low water, the system is switched off by built-in dry-running protection
- including integrated electronic motor protection
- Switchgear outputs extensive signals; it also has additional potential-free contacts for collective run and fault signals
- System is ideally suited for connection to the building management system (BMS/DDC)

Options

- Rainwater storage level indicator
- Operating hours counter
- Individual run/fault signals
- Clock timer
- 3~230 V, 50 Hz
- 60 Hz versions
- Extension module AF 400

Scope of delivery

- Two noise-reduced, normal suctioning, multistage centrifugal pumps
- 400 l hybrid tank with all required connections, transmitter unit with 8 l diaphragm pressure vessel, central switchgear, RainControl-Hybrid with control electronics and level control device of Wilo-Drain TM or TS cistern pumps in three-phase version (optionally in single-phase version) to be ordered separately

Pump curves, motor data, dimensions Wilo-RainSystem AF 400

Wilo-RainSystem AF 400-2MP 304 - 305

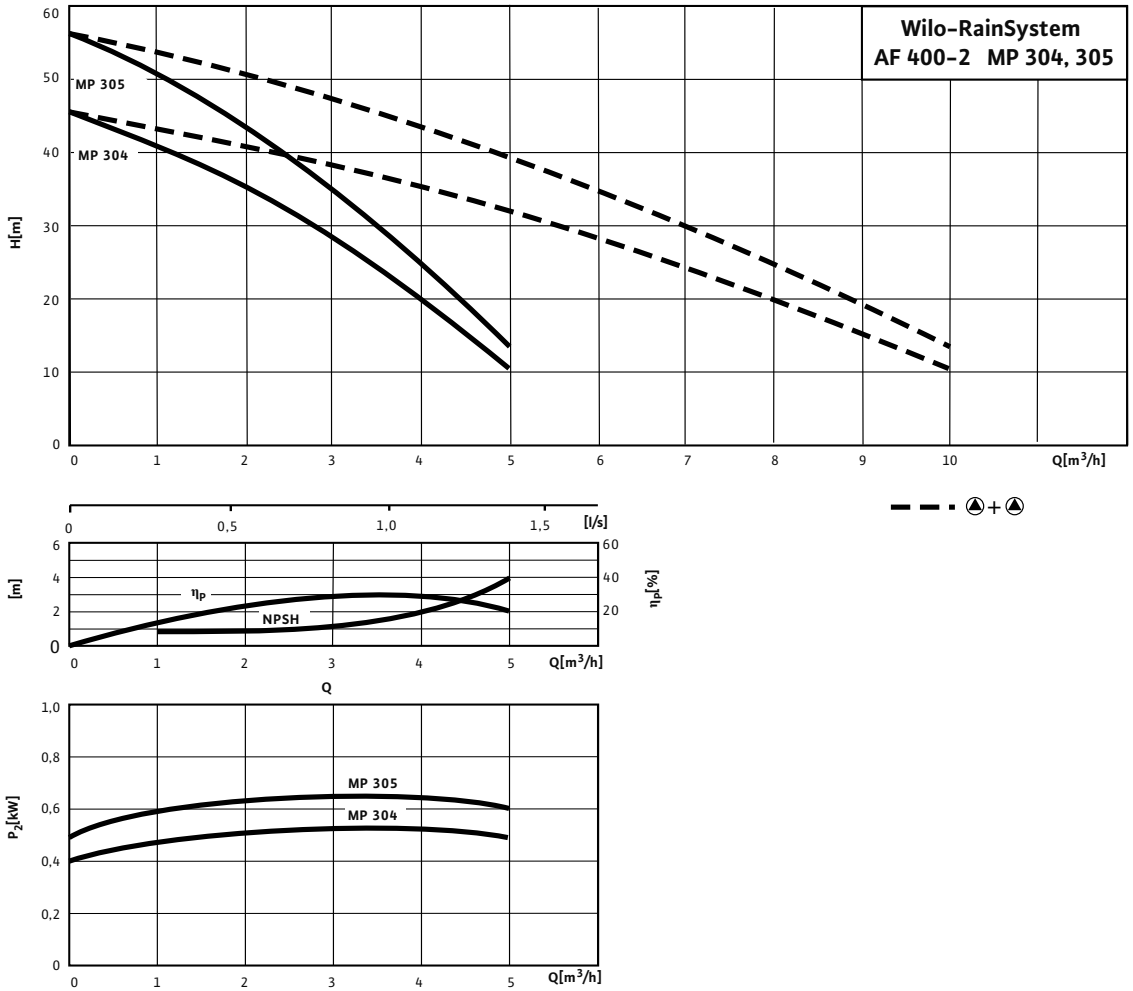

Pump curves, motor data, dimensions Wilo-RainSystem AF 400

Wilo-RainSystem AF 400-2MP 603 - 605

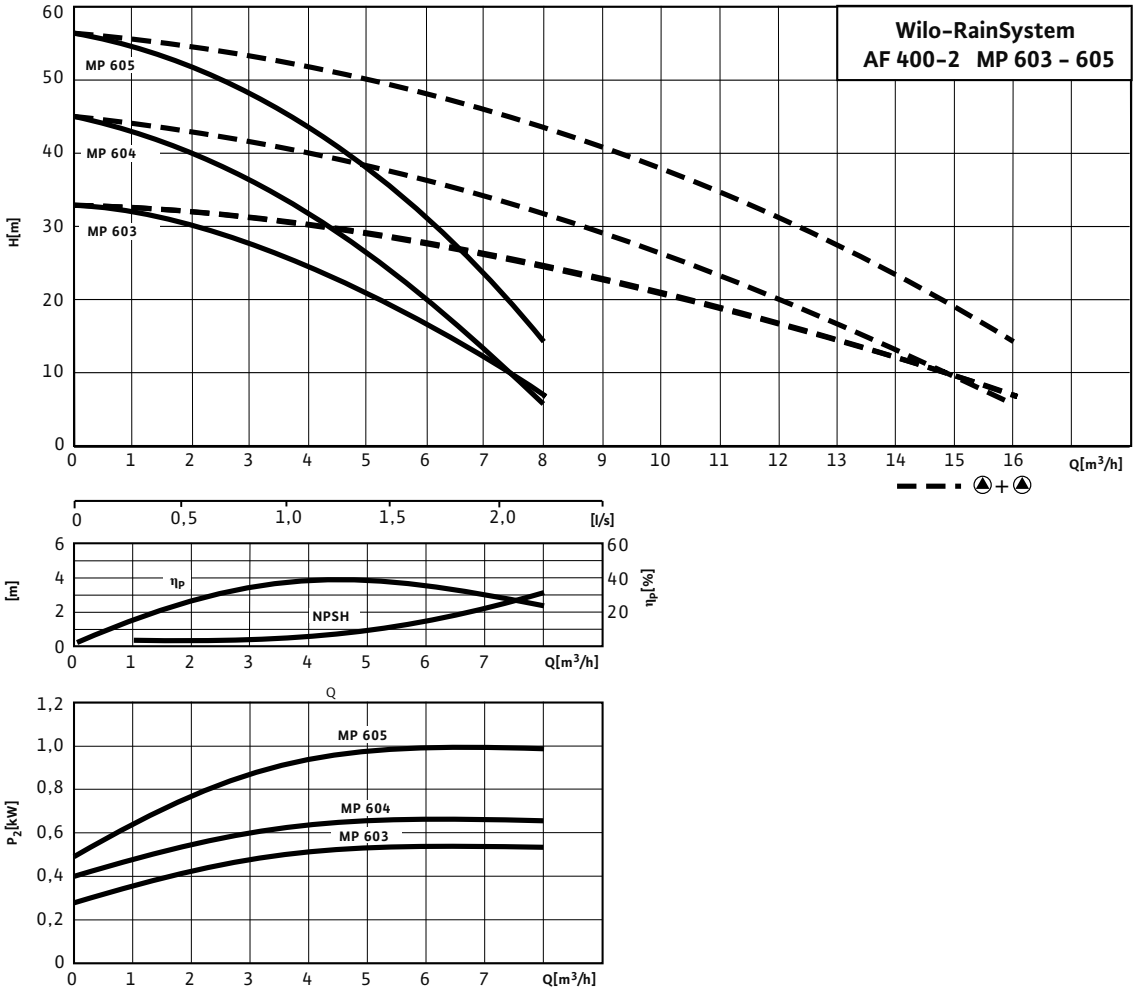

Motor data					
Wilo-RainSystem AF ...	**Number of pumps per system**	**Number of stages**	**Nominal motor power**	**Nominal current (approx.)**	
			P_2	I_N 3~230 V	I_N 3~400 V
			kW	A	
400-2 MP 304	2	4	0.55	3.3	1.9
400-2 MP 305	2	5	0.75	3.6	2.1
400-2 MP 603	2	3	0.55	3.3	1.9
400-2 MP 604	2	4	0.75	3.6	2.1
400-2 MP 605	2	5	1.1	4.9	2.8

Motor efficiency based on 400 V, 50 Hz

Pump curves, motor data, dimensions Wilo-RainSystem AF 400

Dimension drawing

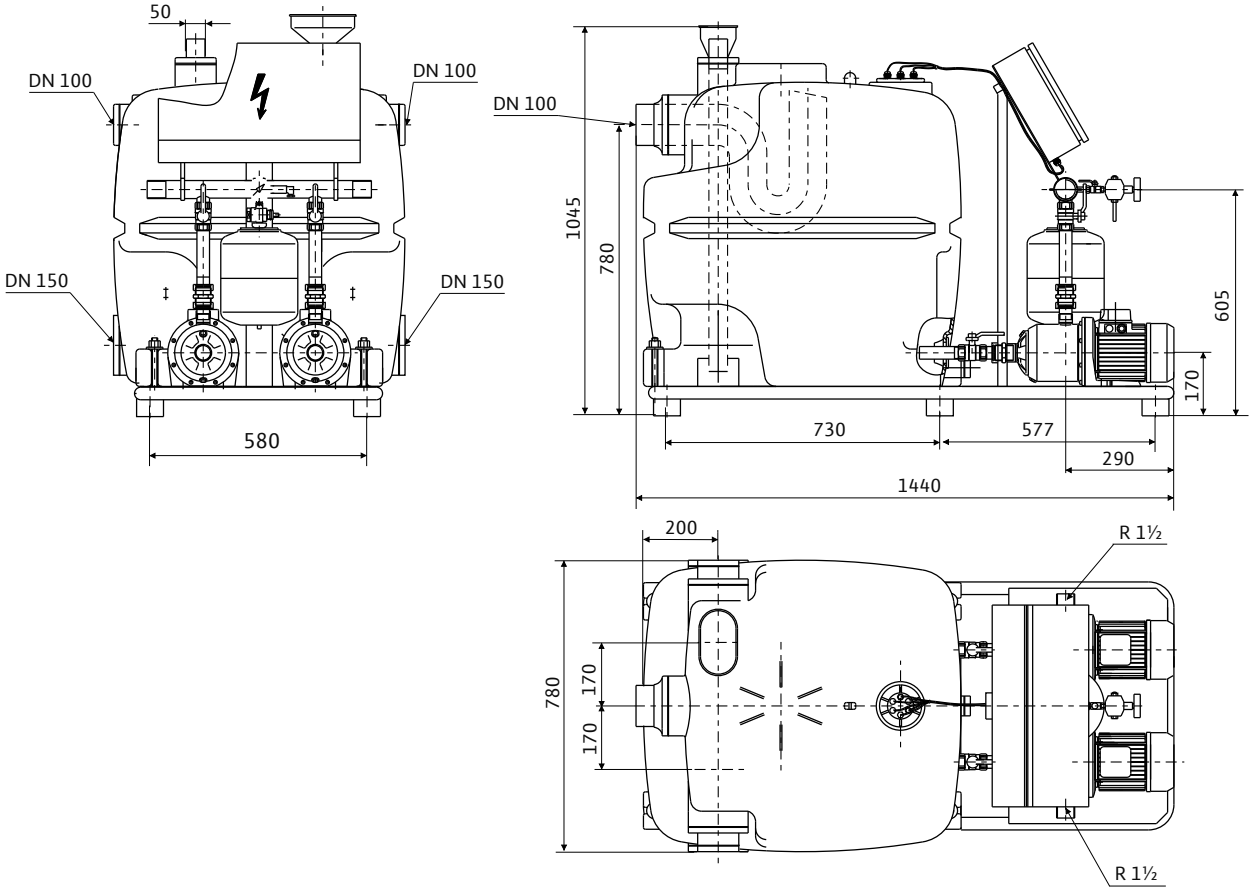

Series description Wilo-RWN 1500

Type key

Example	**Wilo-RWN 1500 MC 304 EM**
RWN	Automatic rainwater utilisation and potable water replenishment system
1500	Nominal content of replenishment reservoir (hybrid tank) (l)
MC	Self-priming, horizontal, multistage centrifugal pump of the series MultiCargo MC
3	Volume flow (m^3/h) at optimum efficiency
04	Number of stages
EM	Single-phase motor 1~230 V, 50 Hz

Equipment/function

RWN 1500:
- Self-priming centrifugal pump
- Electronic pump control with Wilo-FluidControl
- Connection cable with plug
- 1500 litre storage tank made of polyethylene
- Make-up funnel
- Dome cover
- Protection against low water level
- Flexible connection on pressure side
- 4 transport carrying handles

RWN 1500 A: same as RWN 1500, but also with
- Float switch as well as solenoid valve for automatic water replenishment
- Sable set

RWN 1500 AU: same as RWN 1500 A, but also with
- Float valve for overflow protection when installed under backflow level

Attachment set 1500: for enlargement of storage volume by 1700 litres. Extension kits can be retrofitted at any time. The tanks can be connected on the left or on the right. The tank is UV-stabilised, made of black polyethylene, and includes DN 100 connection line and the required fixation accessories.

Description/design

The Wilo rain Collector II reflects years of experience at Wilo in terms of industrially manufactured, professional compact units for rainwater utilisation. Due to the unique multi-chamber storage system (MKS system), the reduction of freshwater requirements to the minimum amount that is essential for ensuring functional capability during dry periods has been achieved. Whereas the entire storage capacity needs to be increased with conventional systems, here replenishment takes place in an MKS system chamber made for that purpose. As a result, the maximum storage capacity is retained for rainwater when rain falls.
Specially coordinated materials and the use of particularly high-quality pumping technology make practically noiseless operation possible. The multi-chamber storage tanks are made of UV-stabilised, black polyethylene (PE), thus providing effective protection against the formation of algae.
The electronic control of the pump with the Wilo-Fluidcontrol makes a diaphragm expansion tank superfluous. In order to ensure optimum usability for the system, both in new buildings and in retrofitting projects, the dimensions of the system were selected in such a way that it would be able to be brought through any door in upright position.
The input connection can be swivelled by 300 degrees. The system can be expanded to include any number of auxiliary tanks, each with a capacity of 1,700 litres. This expansion is also possible within a very short time, even with existing systems. This way the Wilo-RainCollector provides optimum adjustment to accommodate the changing requirements of its users.

Scope of delivery

- Heavy-duty, connection-ready single-pump rainwater utilisation system with noise-reduced, self-priming multistage centrifugal pump and electronic flow monitor / pressure controller
- 1500 l storage tank made of black polyethylene with all required connections, inside tank, make-up funnel, manhole cover, mains connection cable with plug

Optionally available:
Wilo-RainCollector II RWN 1500 A "automatic" Same as RWN 1500, but including automatic water replenishment device from city mains to avoid low water.
Wilo-RainCollector II RWN 1500 AU "automatic for installation below the backflow level" Same as RWN 1500 A, but with a special R 2 float valve for automatic intake shut-off when maximum tank filling level is reached, instead of a DN 100 inflow connection.
Wilo-RWN extension kit 1500 1700 l auxiliary tank, black polyethylene, for direct connection to RWN 1500/A/AU rainwater utilisation system, with lockable manhole cover, including connecting cable and DN 100 dummy plug.

Pump curves Wilo-RWN 1500

Wilo-RWN 1500-MC 304 - 305

n = 2900 rpm

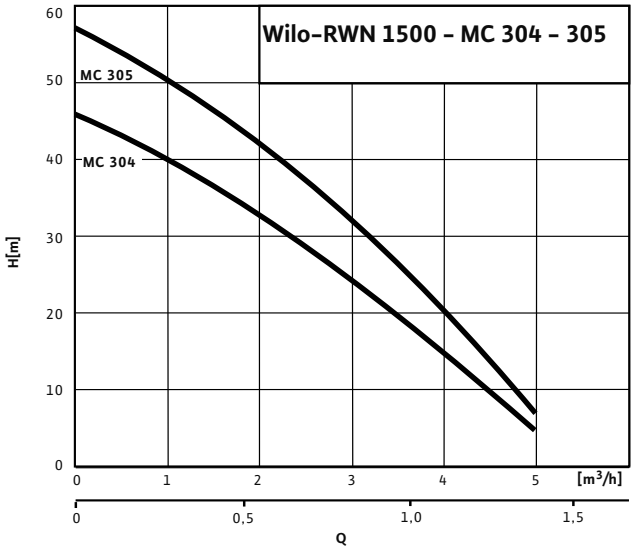

Dimension drawing Wilo-RWN 1500

Wilo-RWN 1500-MC 304 - 305

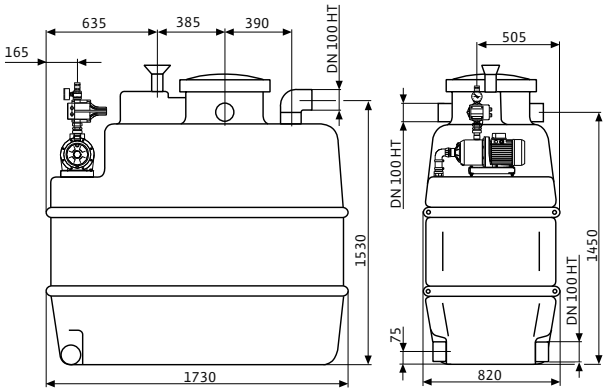

Extension kit 1500

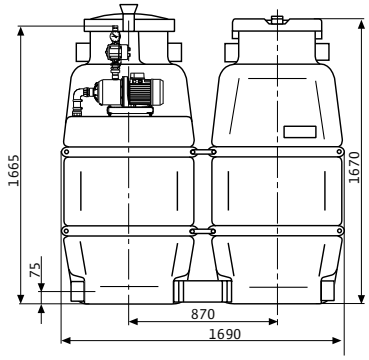

Mechanical accessories

Fine rainwater filter

> Application
The fine rainwater filter is used for filtering rain and/or surface water in drain and collection pipes running horizontally. Ideal for use on roof surfaces up to 350 m^2.

> Version
The Wilo rainwater fine filter is available in the nominal connection diameter DN 125. Extensions for easy cleaning are available in DN 400 as an accessory.

> Installation
The Wilo fine rainwater filter is a filter for ground installation with a wide range of applications. The water yield amounts to nearly 100%, even during heavy rainfall. When used in combination with a coarse filter (not illustrated), it is also suitable for pure seepage. Even subsequent installation in existing pipes is no problem, since there is no height offset between inlet and outlet. Installation is to be carried out with a gradient of approx. 2% in the direction of flow.

> Materials

Filter housing with reinforcement ribs:	Plastic die-cast, black
Cover plate can be walked on:	Plastic die-cast, black
Coarse filter insert (not illustrated):	PE
Fine filter insert:	1.4301
Connecting sleeve:	PE

> Scope of delivery
Fine filtration zone for rainwater storage tank installation
- Fine filter with 0.5 mm or 1.0 mm mesh width

Fine filtration zone for ground installation:
- Fine filter with 0.5 mm or 1.0 mm mesh width
- Extension piece
- Cover
- Sealing kit

Coarse filter zone for ground installation:
- Coarse filter insert with 5 mm mesh width
- Plug-in connection sleeve
- Extension piece
- Cover
- Sealing kit

Each with installation and operating instructions and packaging.

> Accessories
- Extension piece PE – Ø 400 mm/length 750 mm, can be cut to size
- Cover can be walked on and locked
- Sludge lifter basket made of VA for coarse filter zone

> Options
- Discharge of pure water to underground tank vertically downwards, with lateral discharges in other directions (90° intervals)

Mechanical accessories

Pipe filter

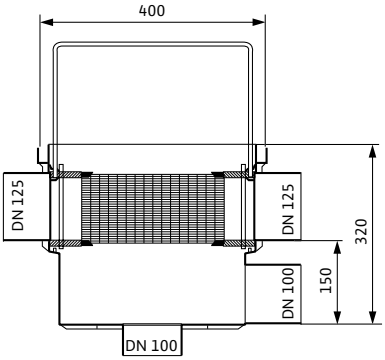

> Application
The pipe filter is used for the filtration of rain and/or surface water in drain and collection lines running horizontally. Ideal for use on roof surfaces up to 350 m^2.

> Version
The Wilo pipe filter is available in the nominal connection diameter DN 125.
Including extension in DN 400 for easy cleaning
for the ground installation version.

> Installation
The Wilo pipe filter is a filter with a wide variety applications for ground installation or dome sump installation in the rainwater storage tank. The water yield amounts to nearly 100%, even during heavy rainfall.
Even subsequent installation in existing pipes is no problem, since there is no height offset between inlet and overflow.
Installation is to be carried out with a gradient of 2% in the direction of flow. Lateral draining of clean water
DN 100 to the underground tank. Height difference between filter inlet and tank inlet 150 mm.

> Materials

Filter housing with reinforcement ribs:	Plastic PE, black
Extension piece:	Plastic PE, black
Correction cover:	Plastic PP, black
Split strainer insert:	1.4301

> Scope of delivery
- Pipe filter housing
- For ground installation: Extension piece including correction cover can be walked on and locked
- Split strainer insert, mesh width 0.5 mm
- Installation and operating instructions and packaging

> Accessories
- Extension piece PE – Ø 400 mm/ length 750 mm, can be cut to size

> Options
- Discharge of pure water to underground tank vertically downwards, with lateral discharges in other directions (90º intervals)
- Discharge of filtered water to the rainwater storage tank either laterally or downwards

Mechanical accessories

Pipe filter sump

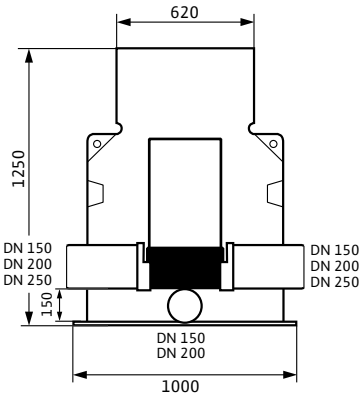

> Application
The pipe filter sump is used for the filtration of rain and/or surface water in drain and collection lines running horizontally. Ideal for use on roof surfaces up to 2000 m^2.

> Version
The Wilo pipe filter sump is optionally available in the nominal connection diameters
DN 150 = roof areas up to 500 m^2
DN 200 = roof areas up to 1000 m^2
DN 250 = roof areas up to 2000 m^2
for inlet and overflow.
Sump diameter 800/600 mm,
H 1200 mm, can be shortened.

> Installation
The Wilo pipe filter sump is a filter with a wide variety of applications for ground installation. The water yield amounts to nearly 100%, even during heavy rainfall. Even subsequent installation in existing pipes is no problem, since there is no height offset between inlet and overflow. Installation is to be carried out with a gradient of 2% in the direction of flow. Lateral draining of clean water DN 150 or DN 200 to the underground tank. Height difference between filter inlet and tank inlet 150 mm.

> Materials

Filter housing with reinforcement ribs:	Plastic PE, black
Correction cover:	Plastic PP, black
Split strainer insert:	1.4301

> Scope of delivery
- Pipe filter sump housing
- Correction cover can be walked on and locked
- Split strainer insert, mesh width 0.5 mm
- Installation and operating instructions and packaging

Filter collector

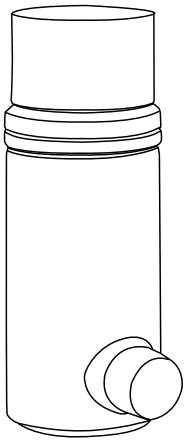

> Application
The Wilo filter collector provides ideal fine filtration of rainwater directly in the downpipe. Can be used for roof surfaces up to 180 m^2.

> Version
The Wilo filter collector is available for the commercial plastic, zinc or copper downpipes in nominal diameters 110, 100, 87 and 80 millimetres.

Nominal diameters:	Material:	
Downpipe/clear water drain	Materia	Downpipe (on site)
DN 110/50	Titanium-zinc	plastic
DN 100/50	Titanium-zinc	Titanium zinc 6-part
DN 87/50	Titanium-zinc	Titanium zinc 7-part
DN 100/50	Copper	Copper 6-part
DN 87/50	Copper	Copper 7-part
DN 80/50	Copper	Copper 8-part

> Installation
The filter collector is characterised by its ease of installation. It is installed by simply sawing out part of the downpipe. A vertical downpipe section of at least 1 m needs to be positioned upstream of the filter collector.

> Materials

Filter housing:	Titanium zinc or copper
Micro-strainer and baffle system:	Stainless steel

> Scope of delivery
- Filter housing
- Micro-strainer/baffle system
- Mesh width 0.17 mm
- Housing cover
- Installation and operating instructions and packaging

Mechanical accessories

Connection kit for AF Basic/AF Comfort

> **Application**
Connection kit for the rainwater utilisation system AF Basic/AF Comfort for flexible, vibration-insulated connection.

Potable water side:	$^{3}/_{4}$" in acc. with KTW
Process water side:	1", including check valves

Cover

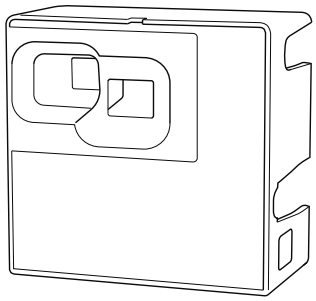

> **Application**
Cover for AF Basic in modern, up-to-date design also serves as transport packaging for environmental reasons.

> **Version**
Soundproofing, made of recycable EPP.

Electrical accessories

Automatic kit for replenishment from a water supply network

> Application
For automatic replenishment of water from a water supply network into vessels by means of a solenoid valve with level-dependent control.

> Version

Overall size	Cable length
R $^1/_2$	5 m
R $^1/_2$	20 m
R 1	5 m
R 1	20 m

> Scope of delivery
- Ready-to-plug small switchgear with float switch and 5 m or 20 m cable
- Ready-to-plug solenoid valve ½" or 1" with 2 m cable (electrical connection 1~230 V, 50 Hz)

Series overview

Series	**Wilo-Jet WJ**	**Wilo-Jet FWJ**	**Wilo-Jet HWJ**
Product photo			
Duty chart	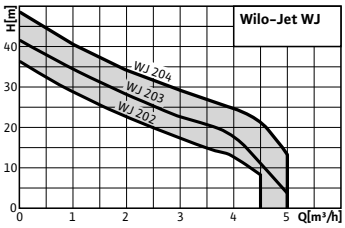	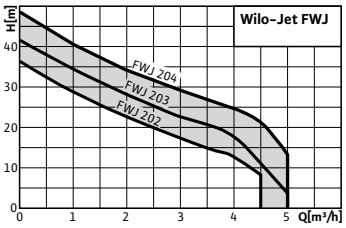	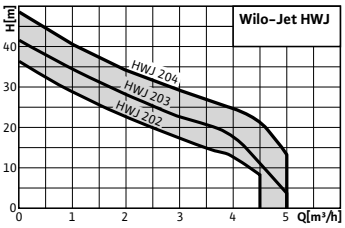
Design	Self-priming multistage centrifugal pumps	Self-priming water-supply units	Self-priming water-supply unit
Application	• Pumping water from wells • Filling, pumping empty, transferring by pumping, irrigation and sprinkling • As emergency pump for overflows	For pumping water and rainwater from wells and tanks for: • Sprinkling • Irrigation and spraying	• Water supply • Sprinkling • Irrigation and spraying • Pumping water from wells and out of low-lying tanks
H_{max}	50 m	50 m	50 m
Q_{max}	5 m^3/h	5 m^3/h	5 m^3/h
Special features/ product advantages	• Ideal for portable outdoor applications (hobby, garden)	• Ideal for outdoor applications (hobby, garden) • Completely preassembled system • Electronic pump control • All parts that come in contact with the fluid are corrosion-free	• Ideal for outdoor applications (hobby, garden) • Rust-free stainless steel prevents corrosion, even with prolonged service periods • Reduction of switch-on frequency and avoidance of fluid hammer, thanks to diaphragm pressure vessel with 20/50 l capacity • Electrical and hydraulic connections already in place, quick and safe to install
Further information	Series information from page 51 Wilo online catalogue at www.wilo.com	Series information from page 53 Wilo online catalogue at www.wilo.com	Series information from page 55 Wilo online catalogue at www.wilo.com

Domestic water supply

Self-priming pumps and systems

Series overview

Series	**Wilo-MultiCargo MC**	**Wilo-MultiCargo FMC**	**Wilo-MultiCargo HMC**
Product photo			
Duty chart	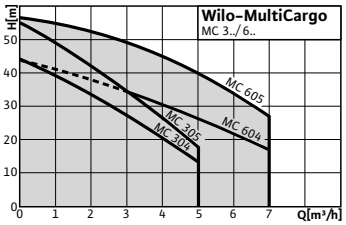	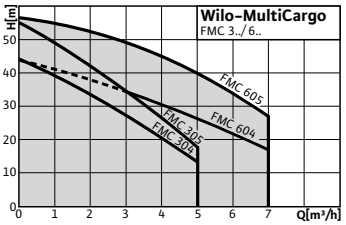	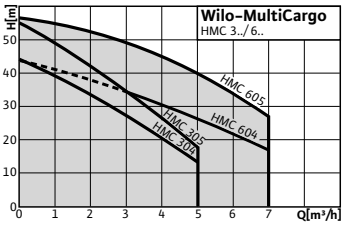
Design	Self-priming multistage centrifugal pumps	Self-priming water-supply unit	Self-priming water-supply unit
Application	• Water supply • Sprinkling • Irrigation and spraying • Rainwater utilisation	• Water supply • Sprinkling • Irrigation and spraying • Rainwater utilisation	• Water supply • Sprinkling • Irrigation and spraying • Pumping water from wells and out of low-lying tanks
H_{max}	57 m	57 m	57 m
Q_{max}	7 m^3/h	7 m^3/h	7 m^3/h
Special features/ product advantages	• Low-noise • Ideal as a base-load pump for rainwater utilisation • IE2-IEC three-phase AC motor	• Ideal system for supplying water throughout the building • Low-noise through multistage construction • Outstanding self-priming capability, due to innovative suction apparatus • Electronic pump control • All parts in contact with the fluid are corrosion-free	• Ideal as water supply system in buildings • IE2-IEC three-phase AC motor (≥ 0.75 kW) • Low-noise due to multistage design • Outstanding self-priming capability, due to innovative priming wing • All parts that come in contact with the fluid are corrosion-free • Reduction of switch-on frequency and avoidance of fluid hammer, thanks to 50 l diaphragm pressure vessel
Further information	Series information from page 58 Wilo online catalogue at www.wilo.com	Series information from page 62 Wilo online catalogue at www.wilo.com	Series information from page 65 Wilo online catalogue at www.wilo.com

Technical data

	Wilo-Jet WJ 1~	Wilo-Jet WJ 3~	Wilo-Jet FWJ	Wilo-Jet HWJ
Approved fluids (other fluids on request)				
Pure water without settling sediment	•			
Process water, cold water, cooling water, rainwater	•	•	•	•
Potable water	–	–	–	–
Output				
Max. volume flow m^3/h	5	5	5	5
Max. delivery head m	50	50	50	50
Max. suction head m	8	8	8	8
Max. inlet pressure bar	2	2	1	1
Fluid temperature °C	+5...+35	+5...+35	+5...+35	+5...+35
Max. ambient temperature °C	40	40	40	40
Maximum operating pressure bar	6	6	6	6
Mains connection 1~, standard version V	230	–	230	230
Mains connection 3~, standard version V	–	230/400	–	–
3~ mains connection alternative application at no extra charge V	230	230	–	–
Mains frequency Hz	50	50	50	50
Nominal speed rpm	2900	2900	2850	2850
Motor/electronics				
Protection class	IP 44	IP 44	IP 44	IP 44
Insulation class	B	B	B	B
Pipe connections				
Nominal connection diameter on the pressure side	G 1	G 1	R 1	Rp 1
Nominal connection diameter on suction side	G 1	G 1	G 1	G 1
Materials				
Pump housing	1.4301	1.4301	1.4301	1.4301
Impeller	1.4301	1.4301	1.4301	1.4301
Pump shaft	1.4005	1.4005	1.4005	1.4005
Mechanical seal	Carbon/ceramic	Carbon/ceramic	Carbon/ceramic	Carbon/ceramic
Stage chambers	–	–	–	–
Diffuser/Injector	Noryl	Noryl	Noryl	Noryl
Seal	NBR	NBR	NBR	NBR

• = available, – = not available

Technical data

	Wilo-MultiCargo MC	Wilo-MultiCargo FMC	Wilo-MultiCargo HMC
Approved fluids (other fluids on request)			
Pure water without settling sediment		•	
Process water, cold water, cooling water, rainwater	•	•	•
Potable water	–	–	–
Output			
Max. volume flow m^3/h	7	7	7
Max. delivery head m	57	57	57
Max. suction head m	8	8	8
Max. inlet pressure bar	4	1.5	4
Fluid temperature °C	+5...+35	+5...+35	+5...+35
Max. ambient temperature °C	40	40	40
Maximum operating pressure bar	8	6	6
Mains connection 1~, standard version V	–	230	230
Mains connection 3~, standard version V	230/400	–	–
3~ mains connection alternative application at no extra charge V	230	–	–
Mains frequency Hz	50	50	50
Nominal speed rpm	2900	2900	2900
Motor/electronics			
Protection class	IP 54	IP 54	IP 54
Insulation class	F	F	F
Pipe connections			
Nominal connection diameter on the pressure side	Rp 1	R 1	Rp 1
Nominal connection diameter on suction side	Rp 1	Rp 1	Rp 1
Materials			
Pump housing	1.4301	1.4301	1.4301
Impeller	Noryl	Noryl	Noryl
Pump shaft	1.4028 1.4404 (1.1 kW)	1.4028 1.4404 (1.1 kW)	1.4028 1.4404 (1.1 kW)
Mechanical seal	Carbon/ceramic	Carbon/ceramic	Carbon/ceramic
Stage chambers	Noryl	Noryl	Noryl
Diffuser/Injector	–	–	–
Seal	NBR	NBR	NBR

• = available, – = not available

Series description Wilo-Jet WJ

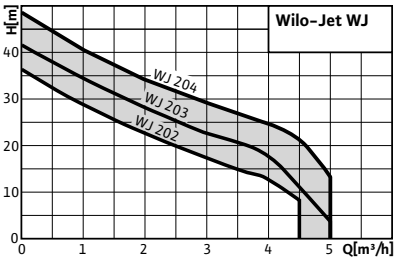

Design
Self-priming multistage centrifugal pumps

Type key

Example:	**WJ-203-X-EM**
WJ	Wilo jet pumps
2	Nominal flow rate Q in m³/h at optimum efficiency
03	Index for pump pressure (02 < 03 < 04), version 03 with higher pressure than version 02 (no indication of number of impellers)
x	Version without carrying frame
[Space]	Portable version with carrying frame
EM	Single-phase current, 1~230 V, 50 Hz
DM	Three-phase current, 3~230/400 V, 50 Hz

Application
- Pumping water from wells
- Filling, pumping empty, transferring by pumping, irrigation and sprinkling
- As emergency pump for overflows

Special features/product advantages
- Ideal for portable outdoor applications (hobby, garden)

Technical data
- Mains connection 1~230 V, 50 Hz or 3~400 V, 50 Hz
- Inlet pressure max. 1 bar
- Fluid temperature max. +5 °C to +35 °C
- Max. operating pressure 6 bar
- Protection class IP 44
- Suction- and pressure-side connection G 1

Equipment/function
- With or without carrying handle, depending on version
- For single-phase motor (1~230V): connecting cable with plug; On/Off switch; Thermal motor protection switch

Materials
- Pump housing stainless steel 1.4301
- Impeller made of 1.4301 stainless steel
- Shaft made of 1.4005 stainless steel
- Mechanical seal made of ceramic/carbon
- Diffuser/injector made of Noryl
- Seals made of NBR

Scope of delivery
- Pump
- With or without carrying handle, depending on version
- Installation and operating instructions

Accessories
- Automatic pressure switching: Fluidcontrol
- Suction/pressure hose 1" (1.5 to 15 m version)
- Foot valve

Pump curves, motor data, dimensions, weights Wilo-Jet WJ

Wilo-Jet WJ

n = 2850 rpm

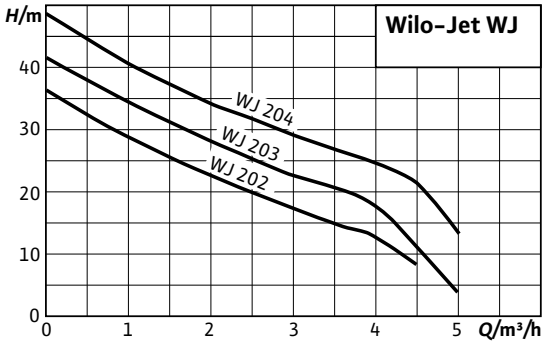

Dimension drawing

WJ ... X version without carrying frame

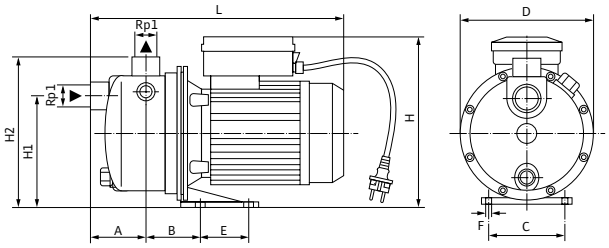

Dimension drawing

Version WJ with carrying frame

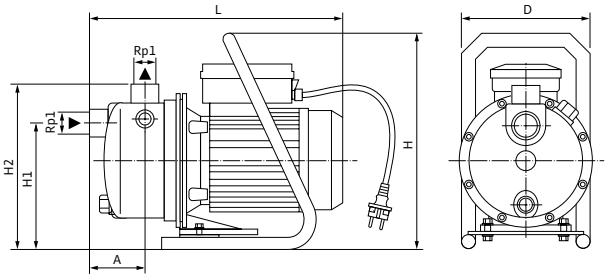

Dimensions, weights

Wilo-Jet...	Mains connection	Dimensions										Weight approx.
		A	*B*	*C*	*D*	*E*	*F*	*H*	*H1*	*H2*	*L*	*m*
		mm										kg
WJ 202	1~230 V, 50 Hz	80	–	–	184	–	–	290	167.5	223	354	10.5
WJ 202 X	1~230 V, 50 Hz	80	83	98	184	80	10	226	147.5	200	354	9.8
WJ 203	1~230 V, 50 Hz	80	–	–	184	–	–	290	167.5	223	354	11.5
WJ 203 X	1~230 V, 50 Hz	80	83	98	184	80	10	226	147.5	200	354	10.8
WJ 203 X	3~230/400 V, 50 Hz	80	83	98	184	80	10	203	147.5	200	354	10
WJ 204	1~230 V, 50 Hz	96.5	–	–	198	–	–	290	178.5	230.5	417	12
WJ 204 X	1~230 V, 50 Hz	96.5	122	98	198	80	10	232	160	212	417	11.1
WJ 204 X	3~230/400 V, 50 Hz	96.5	122	98	198	80	10	215	160	212	446	10.3

Motor data

Wilo-Jet...	Nominal motor power	Power consumption	Nominal current	
			1~230 V, 50 Hz	3~230/400 V, 50 Hz
	P_2	P_1	I_N	
	kW		A	
WJ 202	0.65	0.9	4.00	–
WJ 202 X	0.65	0.9	4.00	–
WJ 203	0.75	1.2	5.20	–
WJ 203 X	0.75	1.2	5.20	4.59 /2.65
WJ 204	1.1	1.3	6.20	–
WJ 204 X	1.1	1.2	6.20	4.43 /2.56

Series description Wilo-Jet FWJ

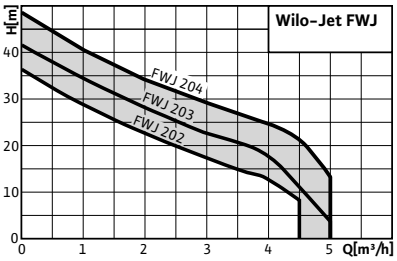

Design
Self-priming water-supply units

Type key

Example:	**FWJ-203-EM**
F	System consisting of pump with integrated Fluidcontrol
WJ	Wilo jet pumps
2	Nominal flow rate Q in m³/h at optimum efficiency
03	Index for pump pressure (02 < 03 < 04), version 03 with higher pressure than version 02 (no indication of number of impellers)
EM	Single-phase current, 1~230 V, 50 Hz

Application
For pumping water and rainwater from wells and tanks for:
- Sprinkling
- Irrigation and spraying

Special features/product advantages
- Ideal for outdoor applications (hobby, garden)
- Completely preassembled system
- Electronic pump control
- All parts that come in contact with the fluid are corrosion-free

Technical data
- Mains connection 1~230 V, 50 Hz
- Inlet pressure max. 1 bar
- Switch-on pressure 1.5 bar to 2.7 bar
- Switch-off pressure min. 2.2 bar
- Fluid temperature +5 °C to +35 °C
- Max. operating pressure 6 bar
- Protection class IP 44
- Pressure-side connection R 1
- Suction-side connection G 1

Equipment/function
- Directly flanged motor
- Connection cable with plug
- Thermal motor protection switch
- Automatic pump control
- Low-water cut-out switchgear

Materials
- Pump housing stainless steel 1.4301
- Impeller made of Noryl
- Shaft made of 1.4005 stainless steel
- Mechanical seal made of carbon/ceramic
- Stage chambers made of Noryl
- Pressure monitor housing made of nylon PA6
- Diffuser/injector made of Noryl
- Seal made of NBR

Scope of delivery
- Pump
- Wilo-FluidControl pump control
- Installation and operating instructions
- Optional carrying handle

Accessories
- Suction/pressure hose 1" (version 1.5 to 15 m long)
- Foot valve

Pump curves, motor data, dimensions, weights Wilo-Jet FWJ

Wilo-Jet FWJ

n = 2850 rpm

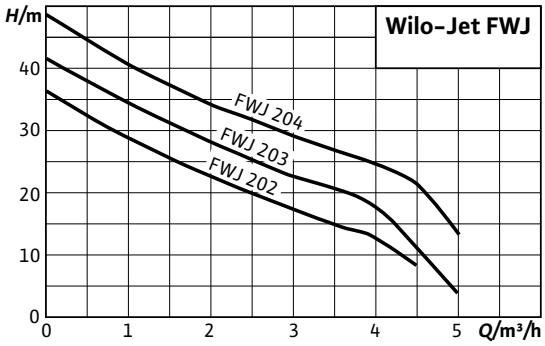

Motor data			
Wilo-Jet...	**Nominal motor power**	**Power consumption**	**Nominal current**
	P_2	P_1	I_N
	kW		A
FWJ 202	0.65	0.85	4.00
FWJ 203	0.75	1	5.20
FWJ 204	1.1	1.3	6.20

Dimension drawing

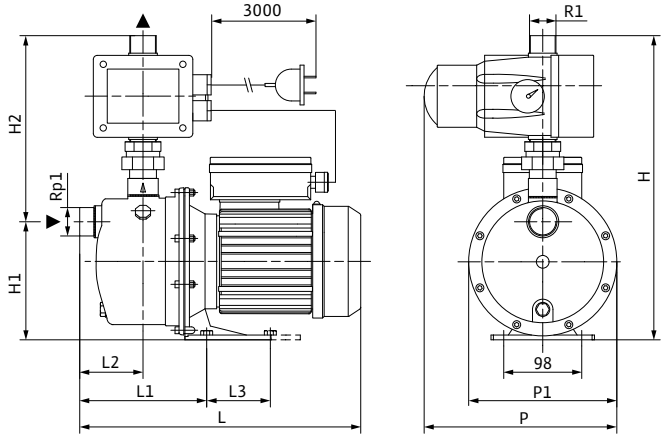

Dimensions, weights							
Wilo-Jet...	**Dimensions**						**Weight approx.**
	L	*L1*	*L2*	*H*	*H1*	*H2*	*m*
	mm						kg
FWJ 202	354	155	72	377	148	229	11.7
FWJ 203	354	155	72	377	148	229	12.1
FWJ 204	417	219	97	389	160	229	13.4

Series description Wilo-Jet HWJ

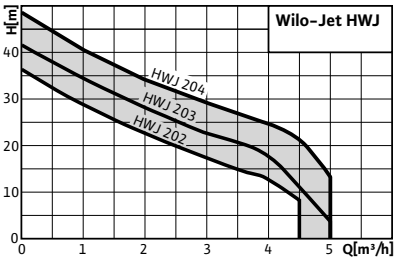

Design
Self-priming water-supply unit

Type key

Example:	**HWJ 20 L 202 EM**
H	System consisting of a pump with diaphragm pressure vessel
WJ	Wilo jet pumps
20 L	Tank size
2	Nominal flow rate Q in m³/h at optimum efficiency
03	Index for pump pressure (02 < 03 < 04), version 03 with higher pressure than version 02 (no indication of number of impellers)
EM	Single-phase current, 1~230 V, 50 Hz

Application
- Water supply
- Sprinkling
- Irrigation and spraying
- Pumping water from wells and out of low-lying tanks

Special features/product advantages
- Ideal for outdoor applications (hobby, garden)
- Rust-free stainless steel prevents corrosion, even with prolonged service periods
- Reduction of switch-on frequency and avoidance of fluid hammer, thanks to diaphragm pressure vessel with 20/50 l capacity
- Electrical and hydraulic connections already in place, quick and safe to install

Technical data
- Mains connection 1~230 V, 50 Hz
- Suction head max. 8 m
- Inlet pressure max. 1 bar
- Start-up pressure 1.5 bar
- Variable switch-off pressure
- Fluid temperature +5 °C to +35 °C
- Max. operating pressure 6 bar
- Protection class IP 44
- Connection on pressure side Rp 1
- Suction-side connection G 1

Equipment/function
- Directly flanged motor
- Pressure switch
- Diaphragm pressure vessel
- for use with single-phase motor
  - Connection cable with plug
  - Thermal motor protection switch

Materials
- Pump housing stainless steel 1.4301
- Impeller made of 1.4301 stainless steel
- Shaft made of 1.4005 stainless steel
- Mechanical seal made of carbon/ceramic
- Stage chambers made of Noryl
- Diffuser/injector made of Noryl
- Seal made of NBR

Scope of delivery
- Pump
- Pressure switch
- Pressure gauge
- Diaphragm pressure vessel (20/50 l)
- Pressure hose with steel casing and screwed connection
- Installation and operating instructions

Accessories
- Suction hose set
- Float switch

Pump curves, motor data, dimensions, weights Wilo-Jet HWJ

Wilo-Jet HWJ

n = 2850 rpm

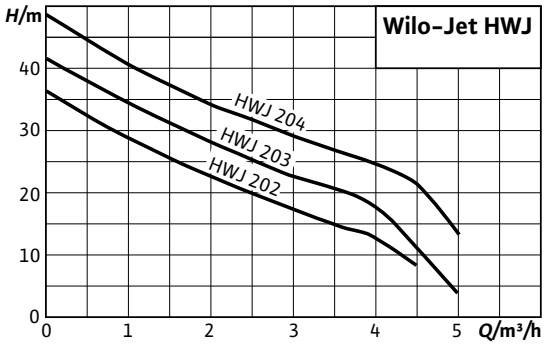

Motor data			
Wilo-Jet...	**Nominal motor power**	**Power consumption**	**Nominal current**
			1~230 V, 50 Hz
	P_2	P_1	I_N
	kW		A
HWJ 20 L 202	0.65	0.85	4.00
HWJ 50 L 202	0.65	0.85	4.00
HWJ 20 L 203	0.75	1	5.20
HWJ 50 L 203	0.75	1	5.20
HWJ 20 L 204	1.1	1.3	6.20
HWJ 50 L 204	1.1	1.3	6.20

Dimension drawing

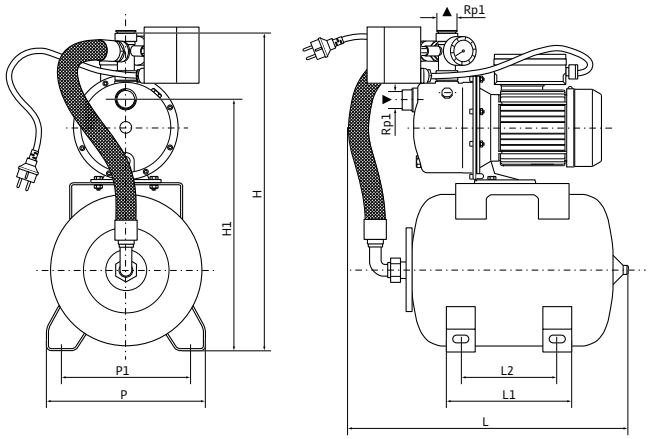

Pump curves, motor data, dimensions, weights Wilo-Jet HWJ

Dimensions, weights

Wilo-Jet...	Dimensions							Weight approx.
	L	*L1*	*L2*	*H*	*H1*	*P*	*P1*	*m*
	mm							kg
HWJ 20 L 202	500	215	170	555	435	270	230	16.8
HWJ 50 L 202	700	275	235	678	558	308	253	23.4
HWJ 20 L 203	500	215	170	555	435	270	230	17,2
HWJ 50 L 203	700	275	235	678	558	308	253	23.8
HWJ 20 L 204	500	215	170	567	447	270	230	18.5
HWJ 50 L 204	700	275	235	690	570	308	253	25.1

Series description Wilo-MultiCargo MC

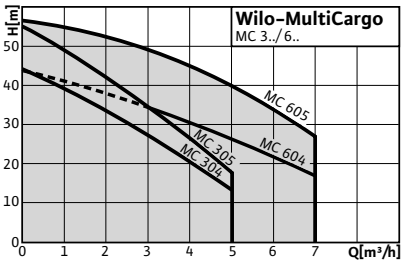

Design
Self-priming multistage centrifugal pumps

Type key

Example:	**MC-305-EM**
MC	MultiCargo (multistage, non-self-priming, horizontal centrifugal pump)
3	Nominal flow rate Q in m³/h
05	Number of impellers
EM	Single-phase current, 1~230 V, 50 Hz
DM	Three-phase current, 3~230/400 V, 50 Hz

Application
- Water supply
- Sprinkling
- Irrigation and spraying
- Rainwater utilisation

Special features/product advantages
- Low-noise
- Ideal as a base-load pump for rainwater utilisation
- IE2-IEC three-phase AC motor

Technical data
- Mains connection 1~230 V, 50 Hz, 3~400 V, 50 Hz
- Max. inlet pressure of 4 bar
- Fluid temperature max. +5 °C to +35 °C
- Max. ambient temperature of +40 °C
- Max. operating pressure of 8 bar
- Protection class 1~: IP X4; 3~: IP 54
- Rp 1 connections on suction and pressure sides

Equipment/function
- Directly flanged motor
- Thermal motor protection switch for single-phase motor (1~230V)

Materials
- Pump housing stainless steel 1.4301
- Impeller made of Noryl
- Shaft made of 1.4028 / 14404 stainless steel (1.1 kW)
- Mechanical seal made of ceramic/carbon
- Stage chambers made of Noryl
- Seals made of NBR

Scope of delivery
- Pump
- Installation and operating instructions

Accessories
- Switchgear ER with corresponding accessories for automated operation,
- Protection against low water level:
  - WMS kit for direct connection to the supply line,
  - Float switch WAEK 65 with small switchgear (only for EM version),
  - Float switch WA 65,
  - SK 277 with three submersible electrodes,
- Pressure switch WVA,
- WILO Fluidcontrol (EK),
- System switching:
  - Float switch WAO 65,
  - Float switch WAO EK 65 with small switchgear (only for EM version).

Pump curves, motor data Wilo-MultiCargo MC

Wilo-MultiCargo MC 304 – 305

n = 2900 rpm

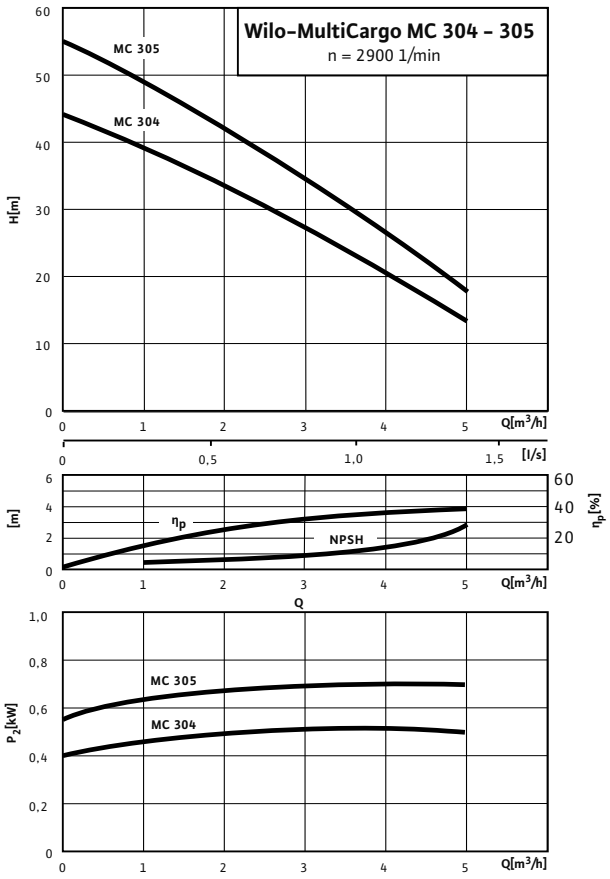

Wilo-MultiCargo MC 604 – 605

n = 2900 rpm

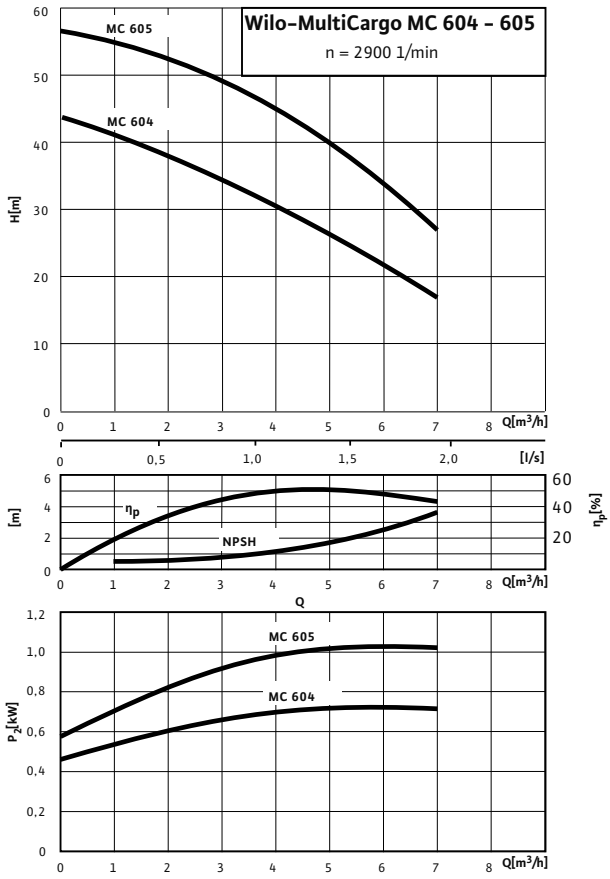

Motor data

Wilo-MultiCargo...	Nominal motor power	Power consumption	Nominal current	
			1~230 V, 50 Hz	3~230/400 V, 50 Hz
	P_2	P_1	I_N	
	kW		A	
MC 304	9.55	9.84	4.1	2.7/1.6
MC 305	9.75	1.11	5.4	3.3/1.9
MC 604	1.1	1.57	–	4.8/2.8
MC 604	9.75	1.09	5.1	–
MC 605	1.1	1.57	7.6	4.8/2.8

Dimensions, weights Wilo-MultiCargo MC

Dimension drawing

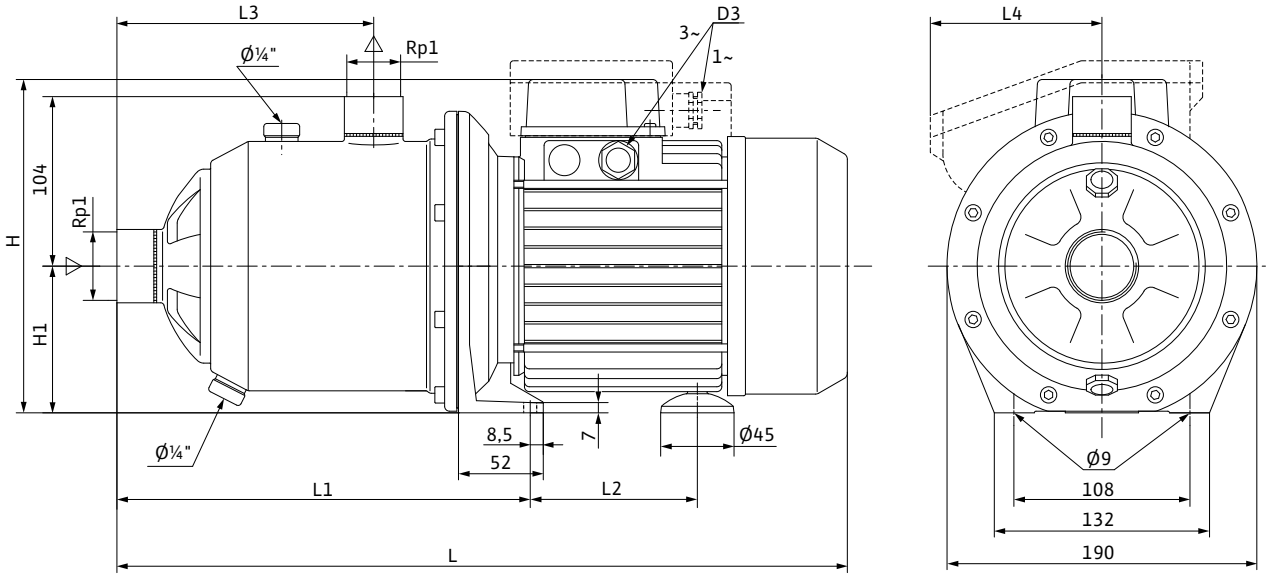

Terminal box, single-phase version: represented by broken line

Dimensions, weights									
Wilo-MultiCargo...	**Dimensions**								**Weight approx.**
	H	*H1*	*L*	*L1*	*L2*	*L3*	*L4*	*D3*	*m*
	mm							PG/M	kg
MC 304 (1~)	188	90	418	253	94	157,5	106	PG 11	8.4
MC 304 (3~)	190	90	418	253	94	157,5	52	PG 11	9.3
MC 305 (1~)	216	90	447	277	88	181.5	106	PG 13.5	11.7
MC 604 (1~)	216	90	423	253	88	157,5	106	PG 13.5	11.7
MC 605 (1~)	224	90	472	277	104	181.5	106	PG 13.5	14.8

Dimensions, weights Wilo-MultiCargo MC

Dimension drawing

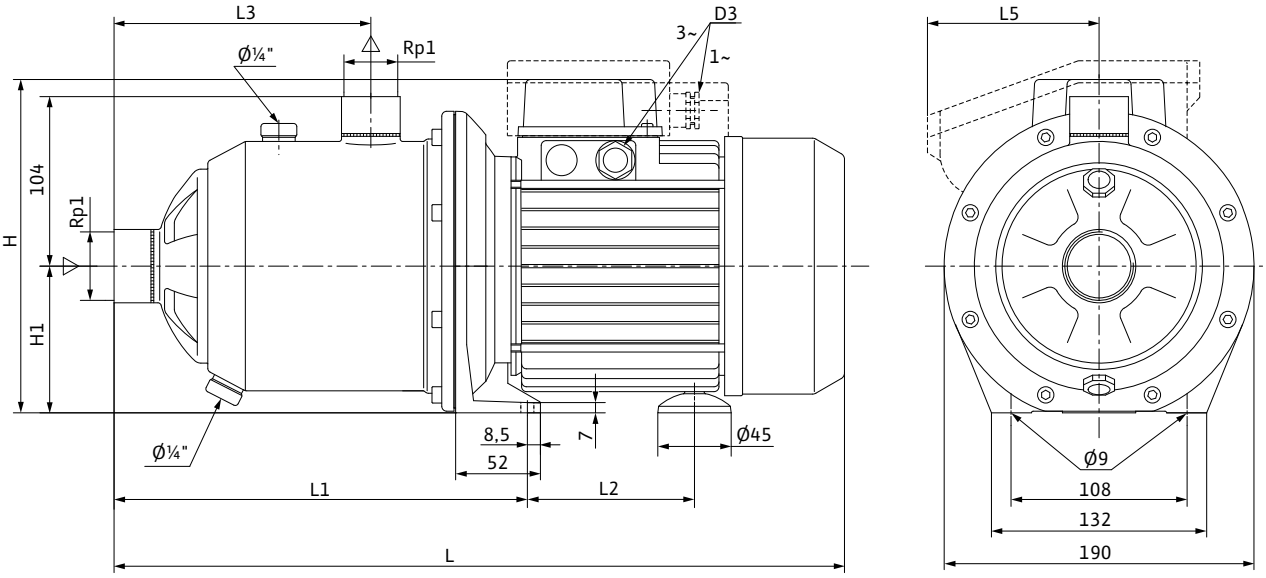

Dimensions, weights									
Wilo-MultiCargo...	**Dimensions**								**Weight approx.**
	H	*H1*	*L*	*L1*	*L2*	*L3*	*L5*	*D3*	*m*
	mm							PG/M	kg
MC 305 (3~)	219	90	481	277	110	181.5	52	M20	13
MC 604 (3~)	219	90	457	253	110	157.5	52	M20	13.8
MC 605 (3~)	219	90	481	277	110	181.5	52	M20	14.4

Series description Wilo-MultiCargo FMC

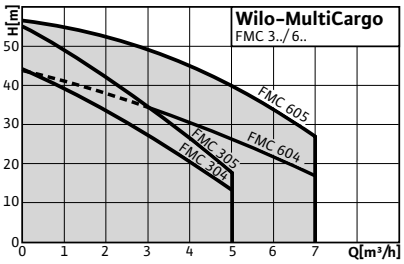

Design
Self-priming water-supply unit

Type key

Example:	**FMC-305-EM**
F	System consisting of pump with integrated Fluidcontrol
MC	MultiCargo (multistage, non-self-priming, horizontal centrifugal pump)
3	Nominal flow rate Q in m³/h
05	Number of impellers
EM	Single-phase current, 1~230 V, 50 Hz

Application
- Water supply
- Sprinkling
- Irrigation and spraying
- Rainwater utilisation

Special features/product advantages
- Ideal system for supplying water throughout the building
- Low-noise through multistage construction
- Outstanding self-priming capability, due to innovative suction apparatus
- Electronic pump control
- All parts in contact with the fluid are corrosion-free

Technical data
- Mains connection 1~230 V, 50 Hz
- Inlet pressure max. 1.5 bar
- Switch-on pressure 1.5 bar to 2.7 bar
- Switch-off pressure min. 2.2 bar
- Fluid temperature +5 °C to +35 °C
- Operating pressure max. 8 bar
- Protection class IP 44
- Pressure-side connection R 1
- Suction-side connection Rp 1

Equipment/function
- Directly flanged motor
- Connection cable with plug
- Thermal motor protection switch
- Automatic pump control
- Low-water cut-out switchgear

Materials
- Pump housing stainless steel 1.4301
- Impeller made of Noryl
- Shaft made of 1.4028 / 1.4404 stainless steel (1.1 kW)
- Mechanical seal made of carbon/ceramic
- Stage chambers made of Noryl
- Pressure monitor housing made of nylon PA6
- Seal made of NBR

Scope of delivery
- Pump
- Wilo-FluidControl pump control
- Installation and operating instructions

Accessories
- Protection against low water level:
  - Float switch WAEK 65 with small switchgear (only for EM version),
  - Float switch WA 65,
  - SK 277 with three submersible electrodes,
- Pressure switch WVA,
- System switching:
  - Float switch WAO 65,
  - Float switch WAO EK 65 with small switchgear (only for EM version).

Pump curves, motor data Wilo-MultiCargo FMC

Wilo-MultiCargo FMC 304 – 305

n = 2900 rpm

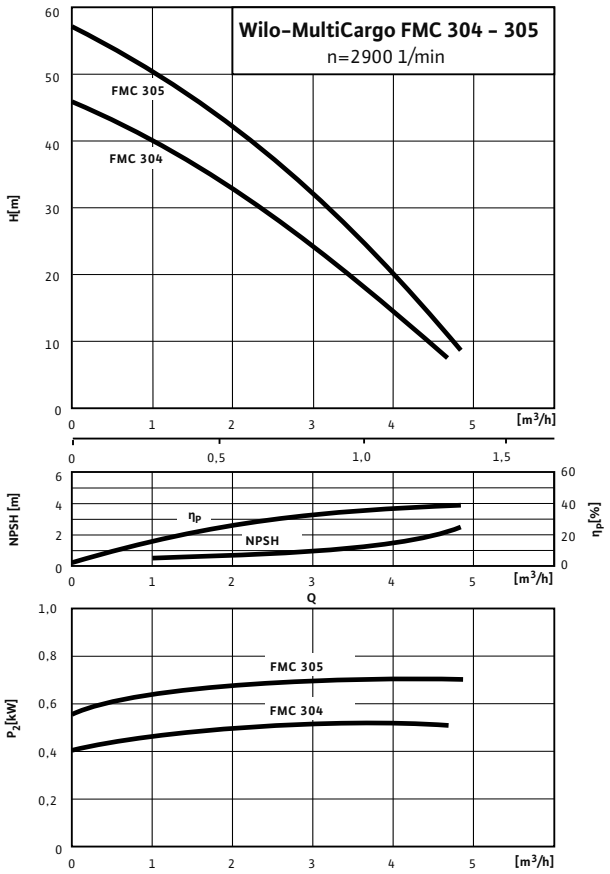

Wilo-MultiCargo FMC 604 – 605

n = 2900 rpm

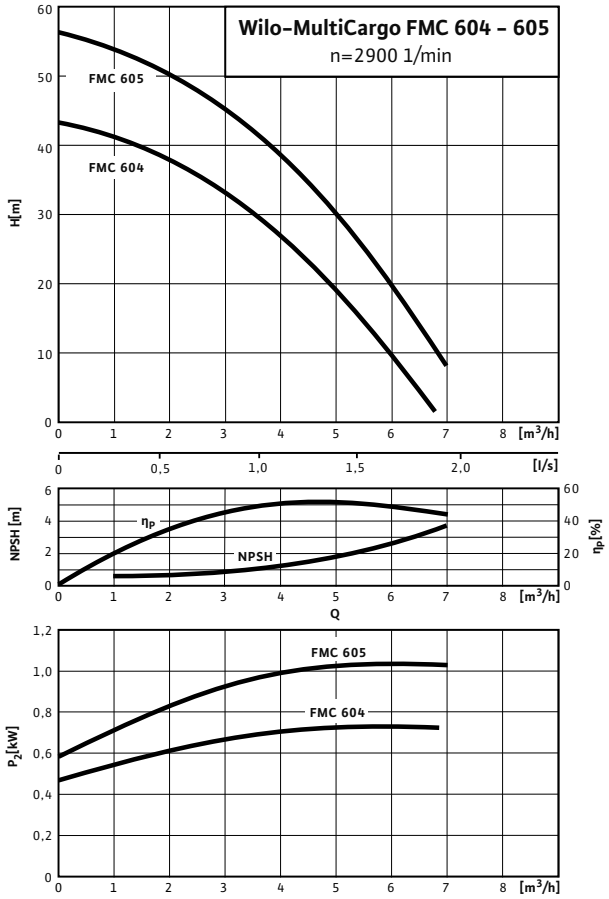

Motor data

Wilo-MultiCargo...	Nominal motor power	Power consumption	Nominal current
			1~230 V, 50 Hz
	P_2	P_1	I_N
	kW		A
FMC 304	9.55	9.84	4.20
FMC 305	9.75	1.09	5.40
FMC 605	1.1	1.51	7.60
FMC 604	9.75	1.09	5.10

Dimensions, weights Wilo-MultiCargo FMC

Dimension drawing

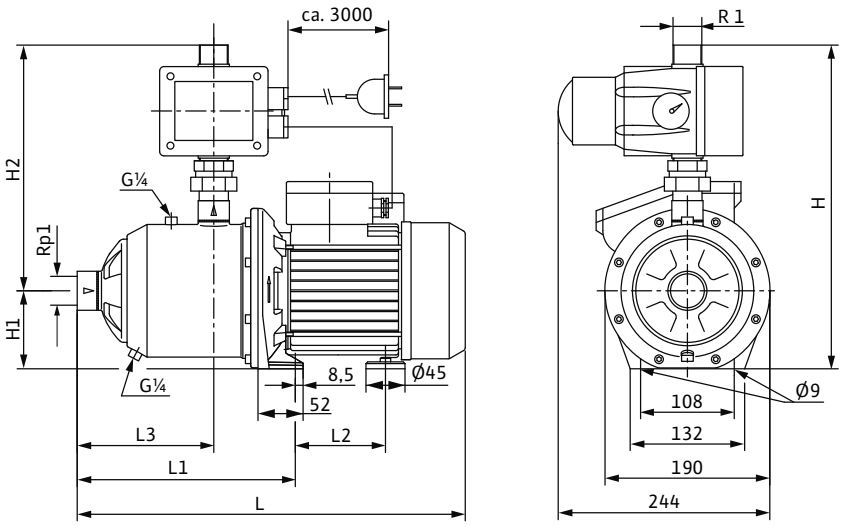

Dimensions, weights								
Wilo-MultiCargo...	**Dimensions**							**Weight approx.**
	L	*L1*	*L2*	*L3*	*H*	*H1*	*H2*	*m*
	mm							kg
FMC 304 (1~)	418	253	94	158	374	90	284	19.2
FMC 305 (1~)	447	277	88	182	374	90	284	13.5
FMC 605 (1~)	472	277	104	182	374	90	284	16.6
FMC 604 (1~)	423	253	88	158	374	90	284	13.5

Series description Wilo-MultiCargo HMC

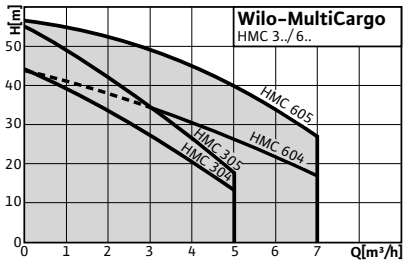

Design
Self-priming water-supply unit

Type key

Example:	**HMC-305-EM**
H	System consisting of a pump with diaphragm pressure vessel
MC	MultiCargo (multistage, non-self-priming, horizontal centrifugal pump)
3	Nominal flow rate Q in m³/h
05	Number of impellers
EM	Single-phase current, 1~230 V, 50 Hz
DM	Three-phase current, 3~230/400 V, 50 Hz

Application
- Water supply
- Sprinkling
- Irrigation and spraying
- Pumping water from wells and out of low-lying tanks

Special features/product advantages
- Ideal as water supply system in buildings
- IE2-IEC three-phase AC motor (≥ 0.75 kW)
- Low-noise due to multistage design
- Outstanding self-priming capability, due to innovative priming wing
- All parts that come in contact with the fluid are corrosion-free
- Reduction of switch-on frequency and avoidance of fluid hammer, thanks to 50 l diaphragm pressure vessel

Technical data
- Mains connection 1~230 V, 50 Hz / 3~400 V, 50 Hz
- Suction head max. 8 m
- Inlet pressure max. 4 bar
- Fluid temperature +5 °C to +35 °C
- Operating pressure max. 8 bar
- Pressure switch setting range 1-5 bar
- Protection class IP 54
- Suction- and pressure-side connection Rp 1

Equipment/function
- Directly flanged motor
- Pressure switch
- Diaphragm pressure vessel
- for use with single-phase motor
  - Connection cable with plug
  - Thermal motor protection switch

Materials
- Pump housing stainless steel 1.4301
- Impeller made of Noryl
- Shaft made of 1.4028 / 1.4404 stainless steel (1.1 kW)
- Mechanical seal made of carbon/ceramic
- Stage chambers made of Noryl
- Seal made of NBR

Scope of delivery
- Pump
- Pressure switch
- Pressure gauge
- Diaphragm pressure vessel (50 l)
- Pressure hose with steel casing and screwed connection
- Installation and operating instructions

Accessories
- Protection against low water level:
  - Float switch WAEK 65 with small switchgear (only for EM version),
  - Float switch WA 65,
  - SK 277 with three submersible electrodes,
- Pressure switch WVA,
- WILO Fluidcontrol (EK),
- System switching:
  - Float switch WAO 65,
  - Float switch WAO EK 65 with small switchgear (only for EM version).

Pump curves, motor data Wilo-MultiCargo HMC

Wilo-MultiCargo HMC 304 - 305

n = 2900 rpm

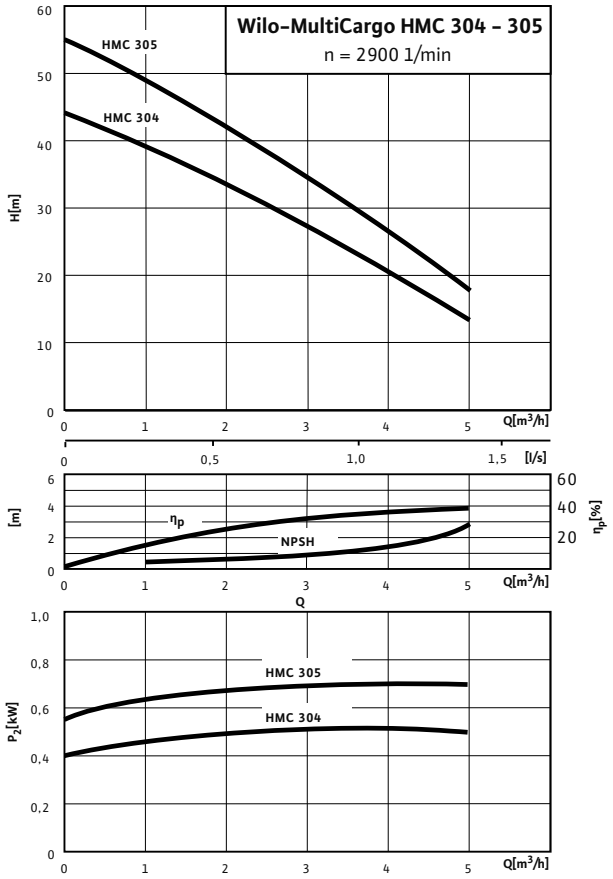

Wilo-MultiCargo HMC 604 - 605

n = 2900 rpm

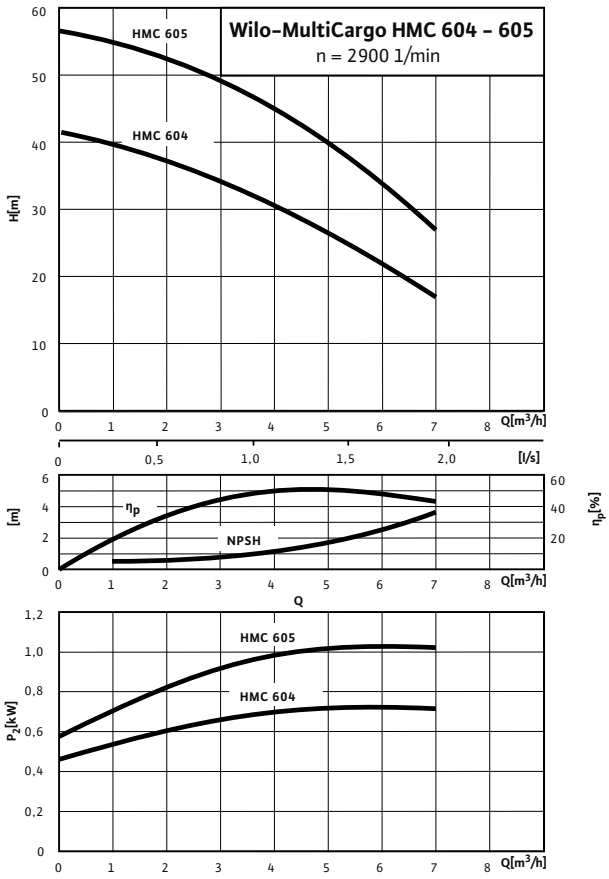

Motor data

Wilo-MultiCargo...	Nominal motor power	Power consumption	Nominal current	
			1~230 V, 50 Hz	3~230/400 V, 50 Hz
	P_2	P_1	I_N	
	kW		A	
HMC 304	9.55	9.83	4.20	3.30 /1.90
HMC 305	9.75	1.06	5.40	3.60 /1.85
HMC 605	1.1	1.47	7.60	5.20 /2.50
HMC 604	1.1	1.47	5.10	4.40 /2.50

Dimensions, weights Wilo-MultiCargo HMC

Dimension drawing

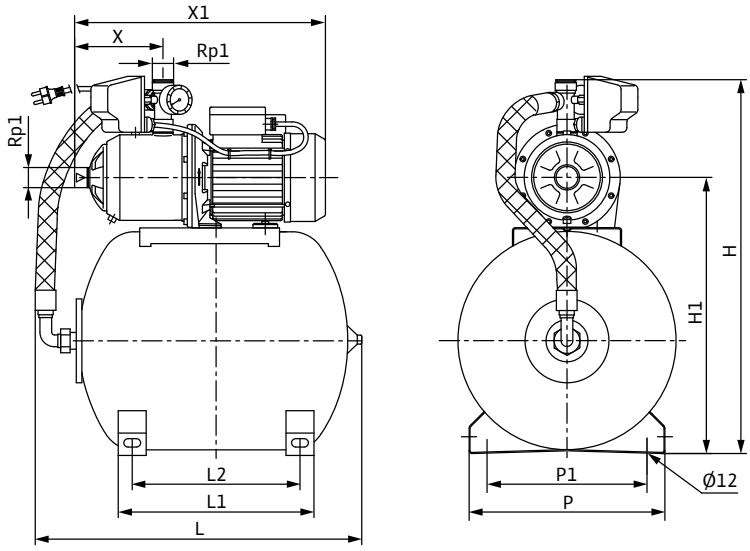

Mains plug, single-phase version: represented by broken line

Dimensions, weights

Wilo-MultiCargo...	Nominal diameters of the pipe connec-tions on suction side	Dimensions								Weight approx.
	RPS	*L*	*L1*	*H*	*H1*	*P*	*P1*	*X*	*X1*	*m*
		mm								kg
HMC 304 (1~)	Rp 1	700	275	680	500	308	253	158	418	23.3
HMC 305 (1~)	Rp 1	700	275	680	500	308	253	182	447	24.8
HMC 605 (1~)	Rp 1	700	275	680	500	308	253	182	472	27.9
HMC 304 (3~)	Rp 1	700	275	680	500	308	253	158	418	22.4
HMC 305 (3~)	Rp 1	700	275	680	500	308	253	182	481	26.1
HMC 604 (3~)	Rp 1	700	275	680	500	308	253	158	457	26.4
HMC 605 (3~)	Rp 1	700	275	680	500	308	253	182	481	27.5
HMC 604 (1~)	Rp 1	700	275	680	500	308	253	158	423	24.8

Domestic water supply

Non-self-priming pumps and systems

Series overview

Series	**Wilo-MultiPress MP**	**Wilo-MultiPress FMP**	**Wilo-MultiPress HMP**
Product photo			
Duty chart	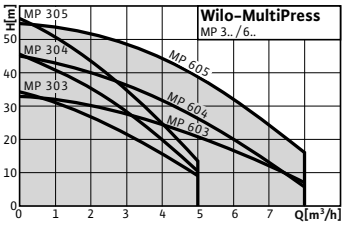	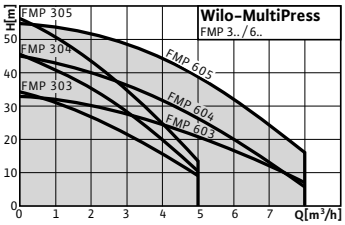	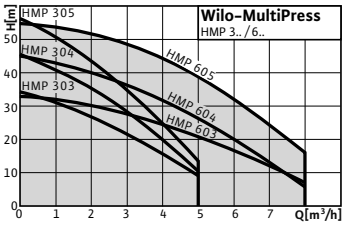
Design	Non-self-priming multistage centrifugal pumps	Non-self-priming water-supply unit	Non-self-priming water-supply unit
Application	• Water supply • Sprinkling • Irrigation and spraying • Rainwater utilisation	• Water supply • Sprinkling • Irrigation and spraying • Rainwater utilisation	• Water supply • Sprinkling • Irrigation and spraying
H_{max}	57 m	57 m	57 m
Q_{max}	8 m^3/h	8 m^3/h	8 m^3/h
Special features/ product advantages	• Low-noise • Ideal as a base-load pump for rainwater utilisation • IE2-IEC three-phase AC motor (≥ 0.75 kW)	• Ideal as water supply system in buildings • Low-noise due to multistage design • Electronic pump control • All parts that come in contact with the fluid are corrosion-free	• Ideal as water supply system in buildings • IE2-IEC three-phase AC motor (≥ 0.75 kW) • Low-noise due to multistage design • All parts that come in contact with the fluid are corrosion-free • Reduction of switch-on frequency and avoidance of pressure surges due to large-sized 50 l diaphragm pressure vessel
Further information	Series information from page 75 Wilo online catalogue at www.wilo.com	Series information from page 79 Wilo online catalogue at www.wilo.com	Series information from page 82 Wilo online catalogue at www.wilo.com

Series overview

Series	**Wilo-EMHIL**
Product photo	
Duty chart	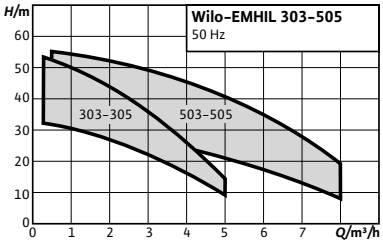
Design	Non-self-priming water supply unit with frequency converter
Application	• Water supply • Rainwater utilisation • Irrigation and spraying
H_{max}	55 m
Q_{max}	8 m^3/h
Special features/ product advan-tages	• Heavy-duty multistage pump with stainless steel hydraulics • Easy operation and adjustment – Large display (32 characters) with plain text display – 4 LEDs for clear status display – Simplified menu navigation – Plug & Pump, the system is pre-assembled and fitted with connecting cable • Thanks to the built-in filter, it satisfies the EMC standards for domestic use (EN 61000-6-2 and EN 61000-6-3) • APP function: periodic analysis of the system behaviour and automatic adjustment of the control parameters (PID) • AIS function: automatic short-period running to prevent the hydraulics freezing up at temperatures < 5 °C • ART function: system automatically attempts to restart after a fault • Float switch can be connected as an option
Further informa-tion	Series information from page 85 Wilo online catalogue at www.wilo.com

Domestic water supply

Non-self-priming pumps and systems

Series overview

Series	**Wilo-Sub TWU 3 Plug & Pump**	**Wilo-Sub TWU 4 Plug & Pump**
Product photo		
Duty chart	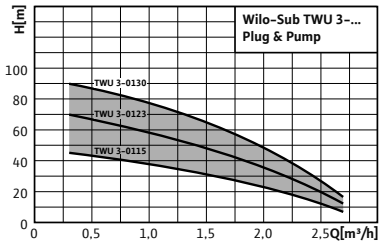	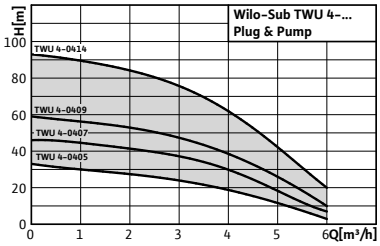
Design	Water-supply unit with submersible-motor pump, control and complete accessories.	Water-supply unit with submersible-motor pump, control and complete accessories.
Application	Water-supply unit for • Water supply from boreholes, wells and rainwater storage • Domestic water supply, sprinkling and irrigation • For pumping water without long-fibre and abrasive constituents	Water-supply unit for self-sufficient water supply in the domestic sector • Washing machines • Garden sprinkling • Transferring by pumping and filling • Taps for process water
H_{max}	88 m	59 m
Q_{max}	2.6 m^3/h	6 m^3/h
Special features/ product advantages	• Electrical system components already prewired • Easy installation and operation • Integrated non-return valve	• Simple assembly, installation and operation • Low-wearing due to floating impellers • Reliable motor, due to high starting torque • Integrated non-return valve
Further information	Series information from page 88 Wilo online catalogue at www.wilo.com	Series information from page 93 Wilo online catalogue at www.wilo.com

Series overview

Series	**Wilo-Sub TWI 5/TWI 5-SE**	**Wilo-Sub TWI 5-SE Plug & Pump**
Product photo		
Duty chart	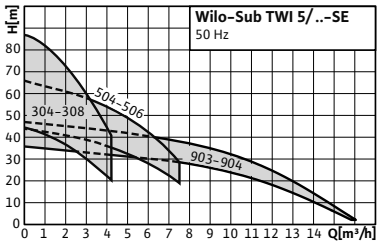	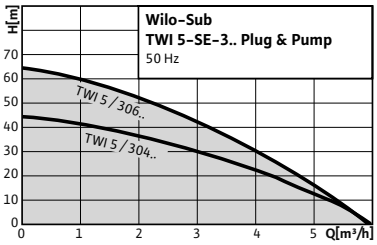
Design	5" submersible pump in stainless steel, multistage	Water-supply system with submersible pump, control and complete accessories
Application	Submersible pumps • Pumping from wells, rainwater storage tanks and vessels • Irrigation, sprinkling and pumping out • Water supply • Rainwater utilisation	• Pumping from wells, rainwater storage tanks and vessels • Irrigation, sprinkling or pumping out • Water supply • Rainwater utilisation
H_{max}	88 m	65 m
Q_{max}	16 m^3/h	6 m^3/h
Special features/ product advantages	• Single-phase AC current version – Pre-installed with switchbox – Thermal motor protection • FS version with integrated float switch • Self-cooling motor (installation outside water possible) • TWI 5 version with standard inlet basket • Variants: – SE: with lateral inlet connecting piece – FS: with built-in float switch	• Ready-to-plug • Complete accessories • Thermal motor protection • Pump (housing, stages, impellers) constructed entirely of 1.4301 stainless steel (AISI 304) • Installation possible outside water
Further information	Series information from page 98 Wilo online catalogue at www.wilo.com	Series information from page 106 Wilo online catalogue at www.wilo.com

Domestic water supply

Non-self-priming pumps and systems

Technical data

	Wilo-MultiPress MP	Wilo-MultiPress FMP	Wilo-MultiPress HMP	Wilo-EMHIL
Approved fluids (other fluids on request)				
Pure water without settling sediment	•	•	•	•
Process water, cold water, cooling water, rain-water	•	•	–	•
Potable water	–	–	–	–
Output				
Max. volume flow m^3/h	8	8	8	8
Max. delivery head m	57	57	57	55
Max. suction head m	–	–	–	–
Max. inlet pressure bar	6	1.5	6	6
Fluid temperature °C	+5...+35	+5...+35	+5...+35	+0...+40
Max. ambient temperature °C	40	40	40	40
Operating pressure bar	10	10	10	10
Mains connection 1~, standard version V	230	230	230	230
Mains connection 3~, standard version V	400	–	400	–
3~ mains connection alternative application at no extra charge V	230	–	230	–
Mains frequency Hz	50	50	50	50
Nominal speed rpm	2900	2900	2900	2900
Motor/electronics				
Protection class	IP X4	IP 54	IP 54	IP 54
Insulation class	F	F	F	F
Pipe connections				
Nominal connection diameter on the pressure side	Rp 1	R 1	R 1	G 1¼
Nominal connection diameter on suction side	Rp 1	Rp 1	Rp 1	Rp 1 - Rp 1¼
Materials				
Pump housing	1.4301	1.4301	1.4301	1.4301
Impeller	Noryl	Noryl	Noryl	1.4301
Pump shaft	1.4057	1.4057	1.4057	1.4028
Mechanical seal	Carbon/ceramic	Carbon/ceramic	Carbon/ceramic	SiC/carbon
Stage chambers	Noryl	Noryl	Noryl	1.4301
Diffuser/Injector	–	–	–	–
Seal	NBR	NBR	NBR	NBR

• = available, - = not available

Series overview

	Wilo-Sub TWU 3 Plug & Pump	Wilo-Sub TWU 4 Plug & Pump
Output		
Max. volume flow m^3/h	2.6	6
Max. delivery head m	88	59
Max. suction head m	–	–
Max. inlet pressure bar	–	–
Fluid temperature °C	+3...+35	+3...+40
Max. ambient temperature °C	–	–
Operating pressure bar	–	–
Mains connection 1~, standard version V	230	230
Mains connection 3~, standard version V	–	–
3~ mains connection alternative application at no extra charge V	–	–
Mains frequency Hz	50	50
Nominal speed rpm	2900	2900
Motor/electronics		
Protection class	IP 58	IP 68
Insulation class	F	B
Pipe connections		
Nominal connection diameter on the pressure side	Rp1	Rp 1¼
Nominal connection diameter on suction side	–	–
Materials		
Pump housing	Stainless steel	Stainless steel
Impeller	Plastic	Plastic
Pump shaft	1.4104	1.4104
Mechanical seal	–	–
Stage chambers	–	–
Diffuser/Injector	–	–
Seal	–	–

• = available, – = not available

Domestic water supply

Non-self-priming pumps and systems

Series overview

	Wilo-Sub TWI 5/TWI 5-SE	Wilo-Sub TWI 5-SE Plug & Pump
Approved fluids (other fluids on request)		
Pure water without settling sediment	•	•
Process water, cold water, cooling water, rainwater	•	•
Potable water	•	–
Output		
Max. volume flow m^3/h	16	6.0
Max. delivery head m	87	65
Max. suction head m	–	–
Max. inlet pressure bar	–	–
Fluid temperature °C	+5...+40	+3...+40
Max. ambient temperature °C	40	–
Operating pressure bar	10	–
Mains connection 1~, standard version V	230	230
Mains connection 3~, standard version V	400	400
3~ mains connection alternative application at no extra charge V	–	–
Mains frequency Hz	50	50
Nominal speed rpm	2850	2900
Motor/electronics		
Protection class	IP 68	IP 68
Insulation class	F	F
Pipe connections		
Nominal connection diameter on the pressure side	Rp 1¼	Rp 1¼
Nominal connection diameter on suction side	Rp 1¼	Rp 1¼
Materials		
Pump housing	1.4301	1.4301
Impeller	1.4301	1.4301
Pump shaft	1.4301	1.4301
Mechanical seal	SiC/SiC Carbon/ceramic	SiC/SiC Carbon/ceramic
Stage chambers	1.4301	1.4301
Diffuser/Injector	1.4301	1.4301
Seal	NBR	NBR

• = available, – = not available

Series description Wilo-MultiPress MP

Design
Non-self-priming multistage centrifugal pumps

Type key

Example:	**MP-305-EM**
MP	MultiPress (multistage, non-self-priming, horizontal centrifugal pump)
3	Nominal flow rate Q in m³/h
05	Number of impellers
EM	Single-phase current, 1~230 V, 50 Hz
DM	Three-phase current, 3~230/400 V, 50 Hz

Application
- Water supply
- Sprinkling
- Irrigation and spraying
- Rainwater utilisation

Special features/product advantages
- Low-noise
- Ideal as a base-load pump for rainwater utilisation
- IE2-IEC three-phase AC motor (≥ 0.75 kW)

Technical data
- Mains connection 1~230 V, 50 Hz, 3~400 V, 50 Hz
- Max. inlet pressure of 6 bar
- Fluid temperature max. +5 °C to +35 °C
- Max. ambient temperature of +40 °C
- Max. operating pressure of 10 bar
- Protection class 1~: IP X4; 3~: IP 54
- Pressure-side connections Rp 1
- Suction-side connections: Rp 1 for MP3..; Rp 1¼ for MP6..

Equipment/function
- Directly flanged motor
- Thermal motor protection switch for 1~230V version

Materials
- Pump housing stainless steel 1.4301
- Impeller made of Noryl
- Shaft made of 1.4028 / 14404 stainless steel (1.1 kW)
- Mechanical seal made of ceramic/carbon
- Stage chambers made of Noryl
- Seals made of NBR

Scope of delivery
- Pump
- Installation and operating instructions

Accessories
- Switchgear ER with corresponding accessories for automated operation,
- Protection against low water level:
  - Float switch WAEK 65 with small switchgear (only for EM version),
  - Float switch WA 65,
  - SK 277 with three submersible electrodes,
- Pressure switch WVA,
- WILO Fluidcontrol (EK),
- System switching:
  - Float switch WAO 65,
  - Float switch WAO EK 65 with small switchgear (only for EM version).

Pump curves, motor data Wilo-MultiPress MP

Wilo-MultiPress MP 303 - 305

n = 2900 rpm

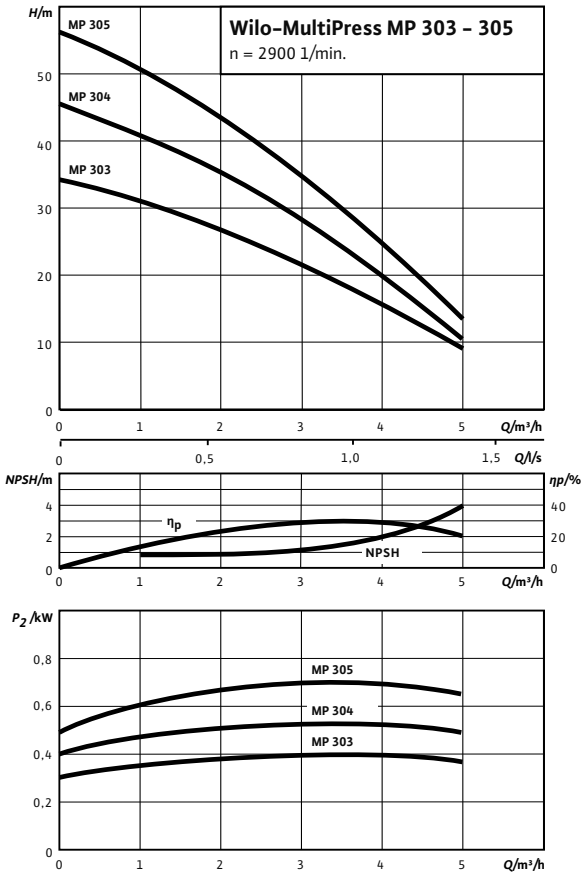

Wilo-MultiPress MP 603 - 605

n = 2900 rpm

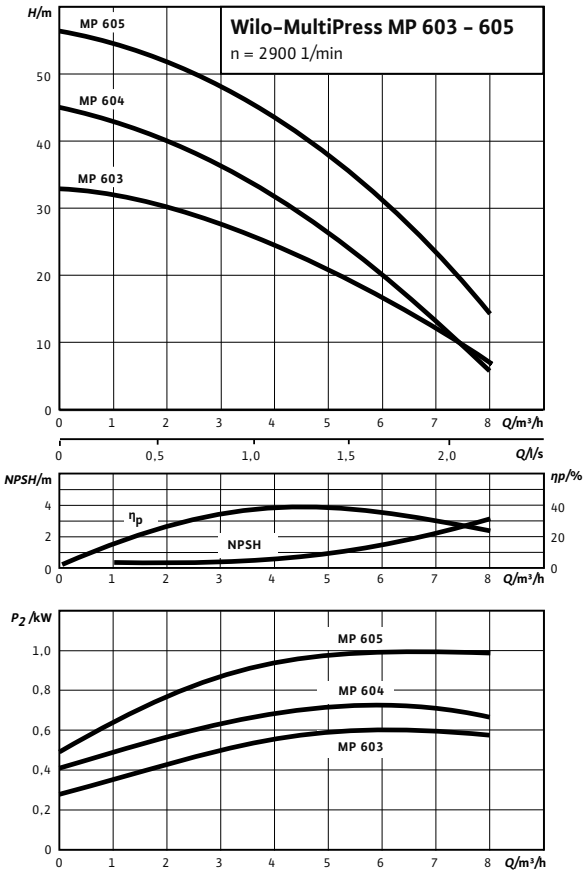

Motor data

Wilo-MultiPress...	Nominal motor power	Power consumption	Nominal current		
				1~230 V, 50 Hz	3~230/400 V, 50 Hz
	P_2	P_1	I_N		
	kW		A		
MP 303	0.55	0.91	–	4.1	–
MP 304	0.55	0.84	–	4.1	2.7/1.6
MP 603	0.55	0.84	–	4.1	2.7/1.6
MP 305	0.75	1.09	3.3/1.9	5.1	–
MP 604	0.75	1.09	3.3/1.9	5.1	–
MP 605	1.1	1.51	4.8/2.8	7.2	–

Dimensions, weights Wilo-MultiPress MP

Dimension drawing

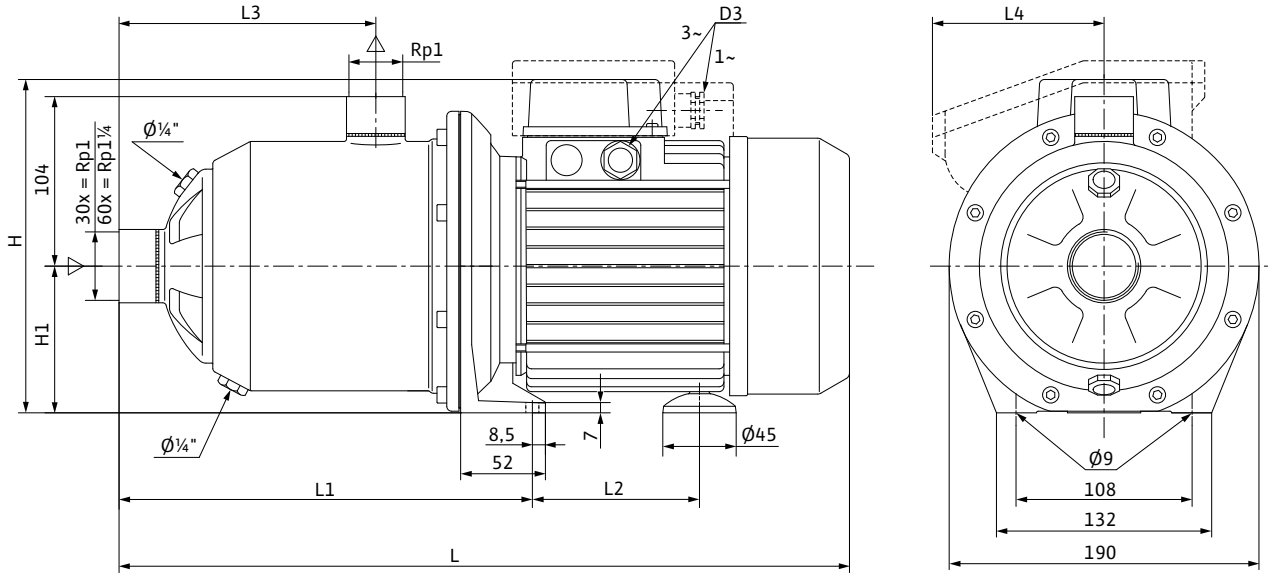

Terminal box, single-phase version: represented by broken line

Dimensions, weights

Wilo-MultiPress...	Dimensions								Weight approx.
	H	*H1*	*L*	*L1*	*L2*	*L3*	*L4*	*D3*	*m*
	mm							PG/M	kg
MP 303 (1~)	188	90	370	205	94	109.5	106	PG 11	8.8
MP 304 (1~)	188	90	418	253	94	157.5	106	PG 11	9.1
MP 304 (3~)	190	90	418	253	94	157.5	52	PG 11	8.2
MP 305 (1~)	216	90	423	253	88	157.5	106	PG 13.5	10.6
MP 603 (1~)	188	90	370	205	94	109.5	106	PG 11	9.4
MP 603 (3~)	190	90	370	205	94	109.5	52	PG 11	8.7
MP 604 (1~)	216	90	423	253	88	157.5	106	PG 13.5	10.6
MP 605 (1~)	224	90	448	253	104	157.5	106	PG 13.5	13.5

Dimensions, weights Wilo-MultiPress MP

Dimension drawing

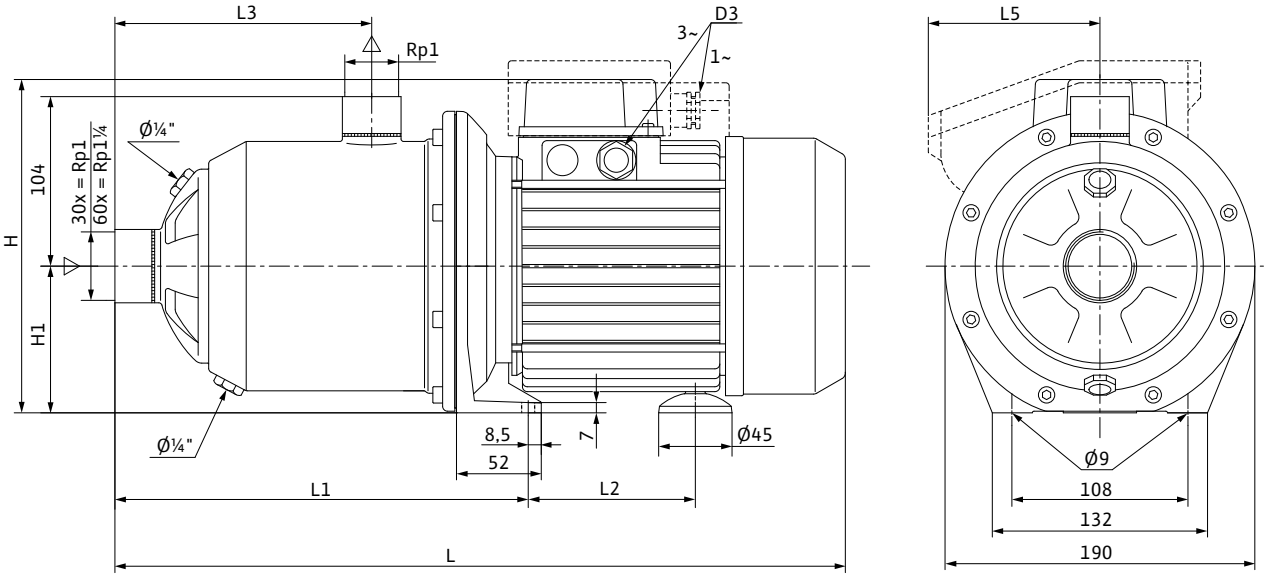

Dimensions, weights									
Wilo-MultiPress...	**Dimensions**								**Weight approx.**
	H	*H1*	*L*	*L1*	*L2*	*L3*	*L5*	*D3*	*m*
	mm							PG/M	kg
MP 305 (3~)	219	90	409	253	110	157.5	52	M20	13
MP 604 (3~)	219	90	409	253	110	157.5	52	M20	13
MP 605 (3~)	219	90	457	253	110	157.5	52	M20	14.4

Series description Wilo-MultiPress FMP

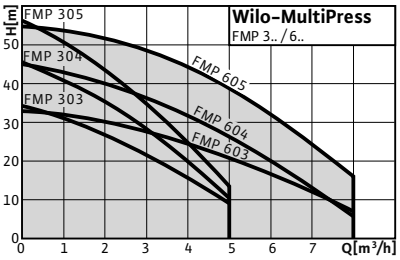

Design
Non-self-priming water-supply unit

Type key

Example:	**FMP-305-EM/XX**
F	System consisting of pump with integrated Fluidcontrol
MP	MultiPress (multistage, non-self-priming, horizontal centrifugal pump)
3	Nominal flow rate Q in m³/h
05	Number of impellers
EM	Single-phase current, 1~230 V, 50 Hz
XX	Manufacturer code

Application
- Water supply
- Sprinkling
- Irrigation and spraying
- Rainwater utilisation

Special features/product advantages
- Ideal as water supply system in buildings
- Low-noise due to multistage design
- Electronic pump control
- All parts that come in contact with the fluid are corrosion-free

Technical data
- Mains connection 1~230 V, 50 Hz
- Inlet pressure max. 1.5 bar
- Switch-on pressure 1.5 bar to 2.7 bar
- Switch-off pressure min. 2.2 bar
- Fluid temperature +5 °C to +35 °C
- Max. operating pressure 10 bar
- Protection class IP 54
- Pressure-side connection R 1
- Suction-side connections Rp 1 for FMP3..; Rp 1¼ for FMP6..

Equipment/function
- Directly flanged motor
- Connection cable with plug
- Thermal motor protection switch
- Automatic pump control
- Low-water cut-out switchgear

Materials
- Pump housing stainless steel 1.4301
- Impeller made of Noryl
- Shaft made of 1.4028 / 1.4404 stainless steel (1.1 kW)
- Mechanical seal made of carbon/ceramic
- Stage chambers made of Noryl
- Pressure monitor housing made of nylon PA6
- Diffuser/injector made of Noryl
- Seal made of NBR

Scope of delivery
- Pump
- Wilo-FluidControl pump control
- Installation and operating instructions

Accessories
- Protection against low water level:
  - Float switch WAEK 65 with small switchgear (only for EM version),
  - Float switch WA 65,
  - SK 277 with three submersible electrodes,
- Pressure switch WVA,
- System switching:
  - Float switch WAO 65,
  - Float switch WAO EK 65 with small switchgear (only for EM version).

Pump curves, motor data Wilo-MultiPress FMP

Wilo-MultiPress FMP 303 – 305

n = 2900 rpm

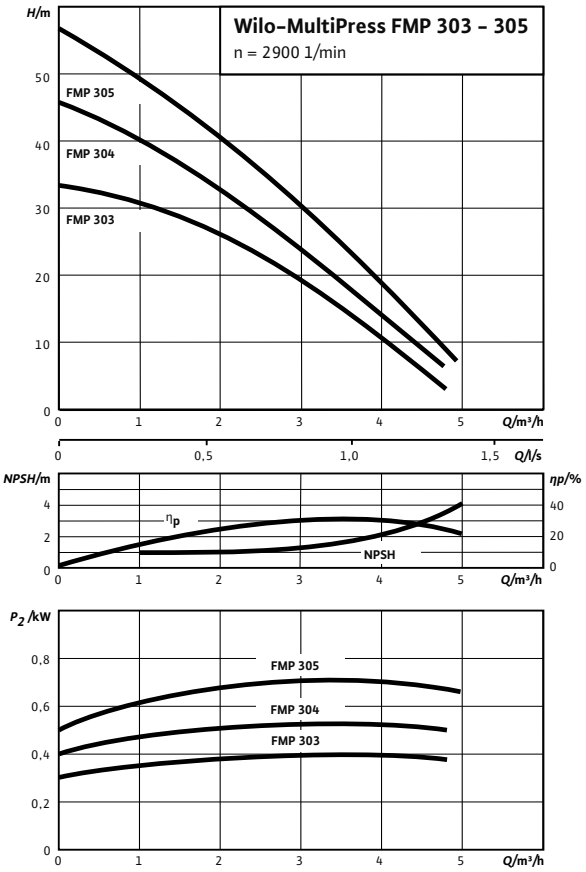

Wilo-MultiPress FMP 603 – 605

n = 2900 rpm

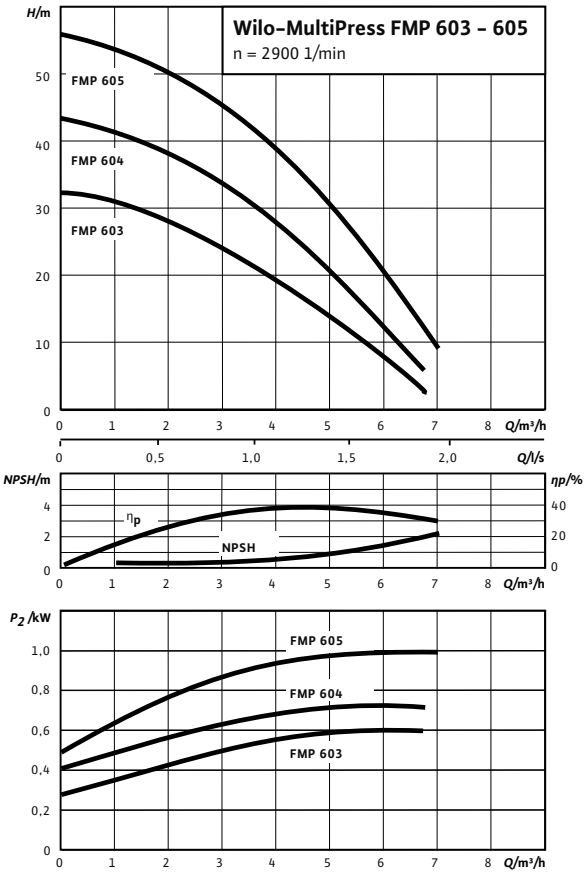

Motor data			
Wilo-MultiPress...	**Nominal motor power**	**Power consumption**	**Nominal current**
			1~230 V, 50 Hz
	P_2	P_1	I_N
	kW		A
FMP 303	0.55	0.84	4.00
FMP 304	0.55	0.84	4.00
FMP 305	0.75	1.09	5.10
FMP 603	0.55	0.84	4.00
FMP 604	0.75	1.09	5.10
FMP 605	1.1	1.51	7.20

Dimensions, weights Wilo-MultiPress FMP

Dimension drawing

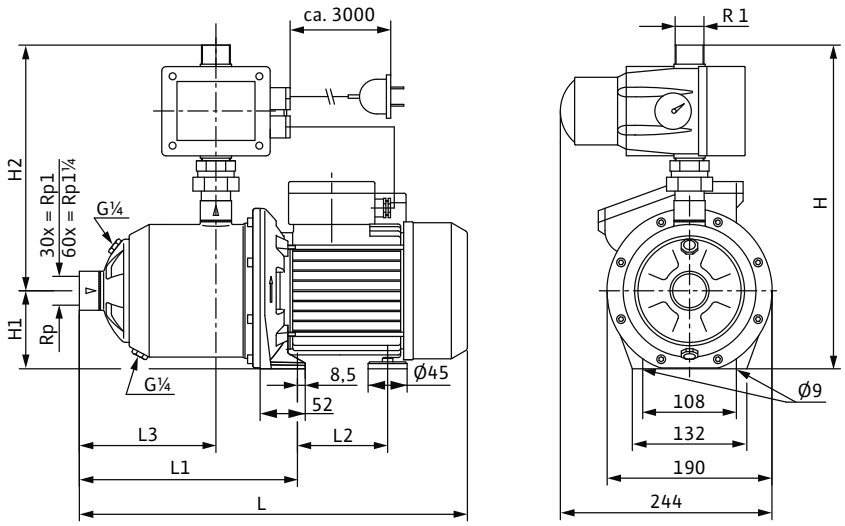

Dimensions, weights								
Wilo-MultiPress...	**Dimensions**							**Weight approx.**
	L	*L1*	*L2*	*L3*	*H*	*H1*	*H2*	*m*
	mm							kg
FMP 303 (1~)	370	205	94	110	374	90	284	10.6
FMP 304 (1~)	418	253	94	158	374	90	284	10.9
FMP 305 (1~)	423	253	88	158	374	90	284	12.4
FMP 603 (1~)	370	205	94	110	374	90	284	11.2
FMP 604 (1~)	423	253	88	158	374	90	284	12.4
FMP 605 (1~)	448	253	104	158	374	90	284	15.3

Domestic water supply

Non-self-priming pumps and systems

Series description Wilo-MultiPress HMP

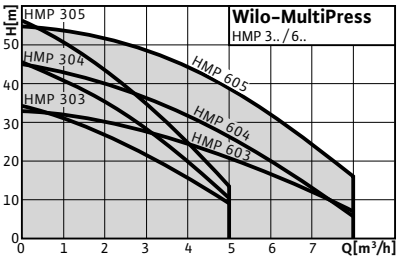

Design
Non-self-priming water-supply unit

Type key

Example:	**HMP-305-EM**
H	System consisting of a pump with diaphragm pressure vessel
MP	MultiPress (multistage, non-self-priming, horizontal centrifugal pump)
3	Nominal flow rate Q in m³/h
05	Number of impellers
EM	Single-phase current, 1~230 V, 50 Hz
DM	Three-phase current, 3~230/400 V, 50 Hz

Application
- Water supply
- Sprinkling
- Irrigation and spraying

Special features/product advantages
- Ideal as water supply system in buildings
- IE2-IEC three-phase AC motor (≥ 0.75 kW)
- Low-noise due to multistage design
- All parts that come in contact with the fluid are corrosion-free
- Reduction of switch-on frequency and avoidance of pressure surges due to large-sized 50 l diaphragm pressure vessel

Technical data
- Mains connection 1~230 V, 50 Hz / 3~400 V, 50 Hz
- Max. inlet pressure 6 bar
- Fluid temperature +5 °C to +35 °C
- Max. operating pressure 10 bar
- Pressure switch setting range 1-5 bar
- Protection class IP 54
- Suction- and pressure-side connection Rp 1

Equipment/function
- Directly flanged motor
- Pressure switch
- Diaphragm pressure vessel
- for use with single-phase motor
  - Connection cable with plug
  - Thermal motor protection switch

Materials
- Pump housing stainless steel 1.4301
- Impeller made of Noryl
- Shaft made of 1.4028 / 1.4404 stainless steel (1.1 kW)
- Mechanical seal made of carbon/ceramic
- Stage chambers made of Noryl
- Seal made of NBR

Scope of delivery
- Pump
- Pressure switch
- Pressure gauge
- Diaphragm pressure vessel (50 l)
- Pressure hose with steel casing and screwed connection
- Installation and operating instructions

Accessories
- Protection against low water level:
  - Float switch WAEK 65 with small switchgear (only for EM version),
  - Float switch WA 65,
  - SK 277 with three submersible electrodes,
- Pressure switch WVA,
- WILO Fluidcontrol (EK),
- System switching:
  - Float switch WAO 65,
  - Float switch WAO EK 65 with small switchgear (only for EM version).

Pump curves, motor data Wilo-MultiPress HMP

Wilo-MultiPress HMP 303 - 305

n = 2900 rpm

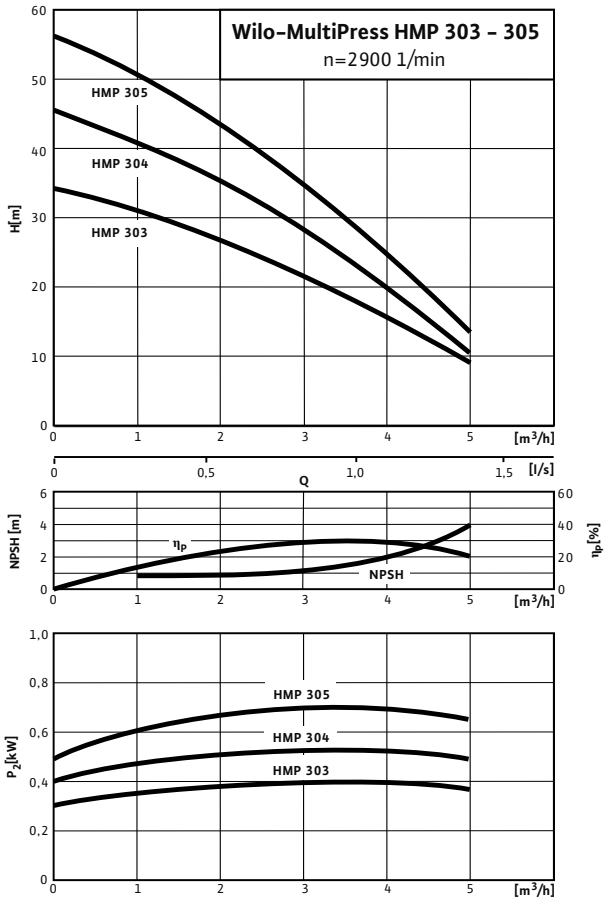

Wilo-MultiPress HMP 603 - 605

n = 2900 rpm

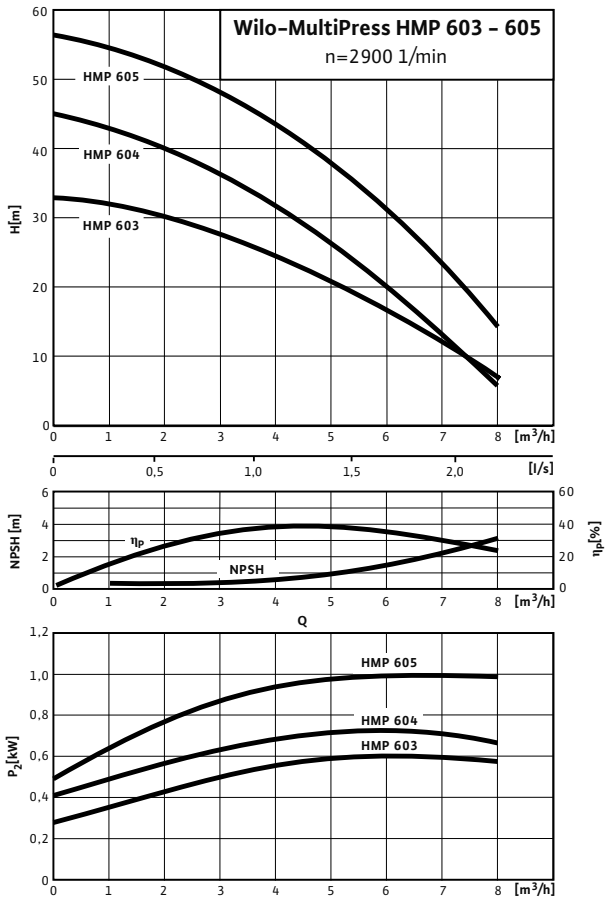

Motor data

Wilo-MultiPress...	Nominal motor power	Power consumption	Nominal current	
			1~230 V, 50 Hz	3~230/400 V, 50 Hz
	P_2	P_1	I_N	
	kW		A	
HMP 303	0.55	0.84	4.00	–
HMP 304	0.55	0.84	4.00	3.30 /1.90
HMP 305	0.75	1.06	5.10	3.60 /1.85
HMP 603	0.55	0.83	4.00	3.30 /1.90
HMP 604	0.75	1.06	5.10	3.60 /1.85
HMP 605	1.1	1.47	7.20	5.00 /2.50

Dimensions, weights Wilo-MultiPress HMP

Dimension drawing

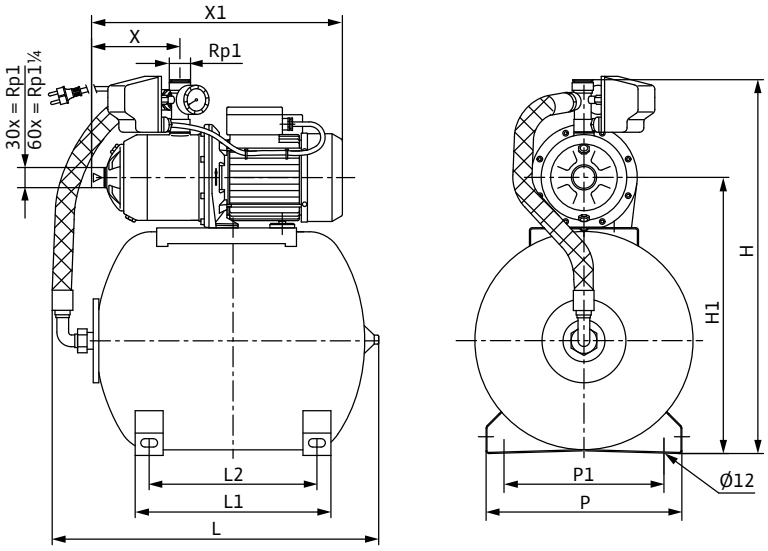

Dimensions, weights										
Wilo-MultiPress...	**Nominal diameters of the pipe connec-tions on suction side**	**Dimensions**								**Weight approx.**
	RPS	*L*	*L1*	*H*	*H1*	*P*	*P1*	*X*	*X1*	*m*
		mm								kg
HMP 303 (1~)	Rp 1	700	275	680	500	308	253	110	370	21.9
HMP 304 (1~)	Rp 1	700	275	680	500	308	253	158	418	22.2
HMP 304 (3~)	Rp 1	700	275	680	500	308	253	158	418	21.3
HMP 305 (1~)	Rp 1	700	275	680	500	308	253	158	423	23.7
HMP 305 (3~)	Rp 1	700	275	680	500	308	253	158	409	26.1
HMP 603 (1~)	Rp 1¼	700	275	680	500	308	253	110	370	22.5
HMP 603 (3~)	Rp 1¼	700	275	680	500	308	253	110	370	21.8
HMP 604 (1~)	Rp 1¼	700	275	680	500	308	253	158	423	23.7
HMP 604 (3~)	Rp 1¼	700	275	680	500	308	253	158	409	26.4
HMP 605 (1~)	Rp 1¼	700	275	680	500	308	253	158	448	26.6
HMP 605 (3~)	Rp 1¼	700	275	680	500	308	253	158	457	26.2

Series description Wilo-EMHIL

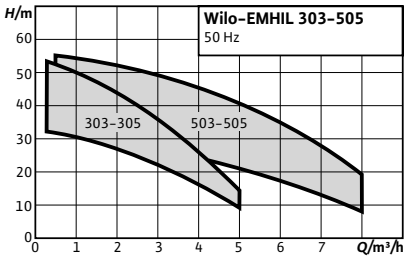

Design
Non-self-priming water supply unit with frequency converter

Type key

Example	**EMHIL 304 M**
EMHIL	Water supply unit with frequency converter Electronic Control
304	Pump series MHIL 304
M	Electrical supply to the system 1~230 V

Application
- Water supply
- Rainwater utilisation
- Irrigation and spraying

Special features/product advantages
- Heavy-duty multistage pump with stainless steel hydraulics
- Easy operation and adjustment
  - Large display (32 characters) with plain text display
  - 4 LEDs for clear status display
  - Simplified menu navigation
  - Plug & Pump, the system is pre-assembled and fitted with connecting cable
- Thanks to the built-in filter, it satisfies the EMC standards for domestic use (EN 61000-6-2 and EN 61000-6-3)
- APP function: periodic analysis of the system behaviour and automatic adjustment of the control parameters (PID)
- AIS function: automatic short-period running to prevent the hydraulics freezing up at temperatures < 5 °C
- ART function: system automatically attempts to restart after a fault
- Float switch can be connected as an option

Technical data
- Maximum operating pressure: 10 bar
- Max. fluid temperature: 40 °C
- Min. fluid temperature:0 °C
- Maximum ambient temperature: 50 °C
- Mains connection: 1~230 V, 50/60 Hz

Equipment/function
- including 1.4 m mains connection and plug
- including EMC filter
- with built-in pressure and flow monitors

Materials
- Stage chambers 1.4301
- Impellers: 1.4301
- Shaft: 1.4028
- Mechanical seal: Si-carbide / carbon
- Pump housing: Cast iron
- Gasket: EPDM
- Rotatable connection: Brass
- Check valve: POM

Description/design
- Multistage pump with stainless steel hydraulics
- Pre-cabled and pre-assembled with rotatable connections and check valve
- Fully automatic protection against:
  - Excess current
  - Dry running
  - Undervoltage and overvoltage
  - Excess temperature
  - Short-circuit

Scope of delivery
1 control device Electronic Control with:
- 1 series MHIL pump with 1 Electronic Control (1.4 m connecting cable)
- 1 rotatable connection and 1 check valve
- One each Installation and operating instructions for MHIL pump and for Electronic Control

Pump curves, motor data Wilo-EMHIL

Wilo-EMHIL 303-305

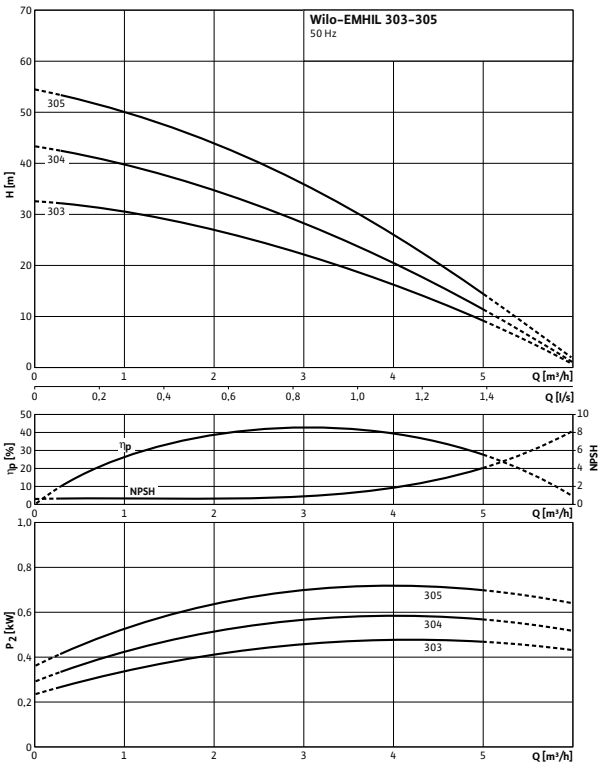

Wilo-EMHIL 503-505

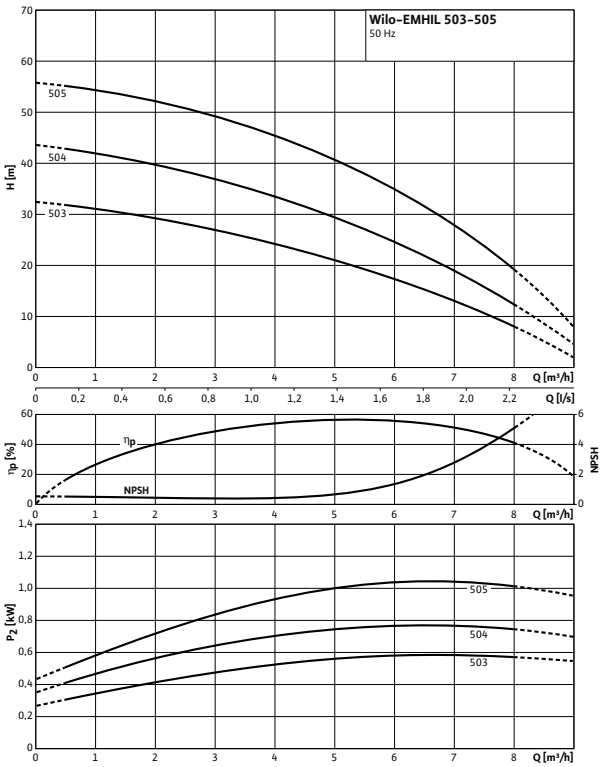

Motor data

Wilo-EMHIL...	Nominal motor power	Power consumption	Nominal current
	P_2	P_1	I_N
	kW		A
303 M	0.55	0.65	3.40
304 M	0.55	0.81	4.10
305 M	0.75	1.03	7.10
503 M	0.55	0.8	4.00
504 M	0.75	1.12	7.30
505 M	1.1	1.34	8.40

Dimensions, weights Wilo-EMHIL

Dimension drawing

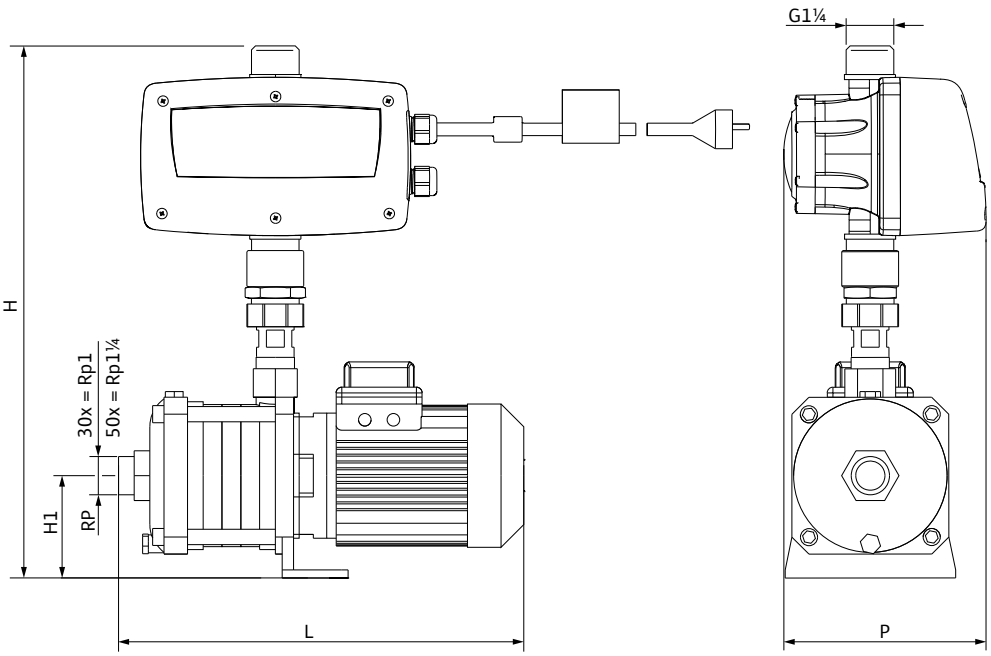

Dimensions, weights					
Wilo-EMHIL...	**Dimensions**				**Weight approx.**
	L	*H*	*H1*	*P*	*m*
	mm				kg
303 M	356	470	90	178	19
304 M	381	470	90	178	19
305 M	443	472	90	178	23
503 M	356	470	90	178	19
504 M	419	472	90	178	23
505 M	443	472	90	178	20

Series description Wilo-Sub TWU 3 Plug & Pump

Product photo/free-form

Product photo/free-form

Design
Water-supply unit with submersible-motor pump, control and complete accessories.

Type key

e.g.	**Wilo-Sub TWU 3-0115-P&P/FC**
TWU	Submersible pump
3	Diameter of the hydraulic unit in inches ["]
01	Nominal volume flow [m^3/h]
15	Number of hydraulic stages
P&P	Plug & Pump pump system
FC	Version FC = Sub I package with Fluidcontrol DS = Sub II package with pressure switching

Application
Water-supply unit for
- Water supply from boreholes, wells and rainwater storage
- Domestic water supply, sprinkling and irrigation
- For pumping water without long-fibre and abrasive constituents

Special features/product advantages
- Electrical system components already prewired
- Easy installation and operation
- Integrated non-return valve

Technical data
- Mains connection: 1~230 V, 50 Hz
- Immersed operating mode: S1
- Fluid temperature: 3-35 °C
- Minimum flow rate at motor: 0.08 m/s
- Max. sand content: 50 g/m^3
- Max. number of starts: 30 /h
- Max. immersion depth: 150 m
- Protection class: IP 58
- Pressure connection: Rp 1

Equipment/function
- Multistage submersible-motor pump with radial impellers
- Integrated non-return valve
- NEMA coupling
- Single-phase motor
- Thermal motor protection

Materials
- Hydraulic housing: 1.4301 stainless steel
- Impellers: polycarbonate
- Hydraulics shaft: 1.4104 stainless steel
- Motor housing: 1.4301 stainless steel
- Motor shaft: 1.4305 stainless steel

Description/design
Submersible-motor pump for vertical or horizontal installation.

Hydraulics
Multistage submersible-motor pump with radial impellers with sectional construction. Integrated non-return valve. All parts in contact with the fluid are made of corrosion-free materials.
Motor
Corrosion-free single-phase motor for direct starting, rewindable, oil-filled, self-lubricating bearings.

Cooling
The motor is cooled by the fluid. The motor must always be immersed when operated. The limit values for maximum fluid temperature and minimum flow velocity must be adhered to. Vertical installation is possible with or without cooling jacket. Cooling jacket is required for horizontal installation.

Options
- Motor versions for 3~230 V, 50 Hz; 1~230 V, 60 Hz; 3~380 V, 60 Hz

Scope of delivery
Wilo-Plug & Pump Sub-I package for garden irrigation of private greenery in the domestic sector:
- Fully mounted

Series description Wilo-Sub TWU 3 Plug & Pump

- 30 m connecting cable approved for potable water (cross-section: 4x1.5 mm^2)
- Switchbox with capacitor, thermal motor protection and On/Off switch
- Wilo-FluidControl (FC); automatic flow monitor and pressure controller with built-in dry-running protection
- 30 m retaining cable
- Installation and operating instructions

Wilo-Plug & Pump Sub-II package for self-sufficient water supply in single-family and multi-family houses:
- Fully mounted
- 30 m connecting cable approved for potable water (cross-section: 4x1.5 mm^2)
- Switchbox with capacitor, thermal motor protection and On/Off switch
- Wilo pressure switching 0 – 10 bar, including 18 l diaphragm expansion tank, pressure gauge, check valve and pressure switch
- 30 m retaining cable
- Installation and operating instructions

Accessories
- Cooling jacket pipes
- Cable kits for potable and process water
- Switchgears
- Connection and installation material

Configuration
- No suction mode is possible with these units!
- The unit must be fully immersed in water during operation.

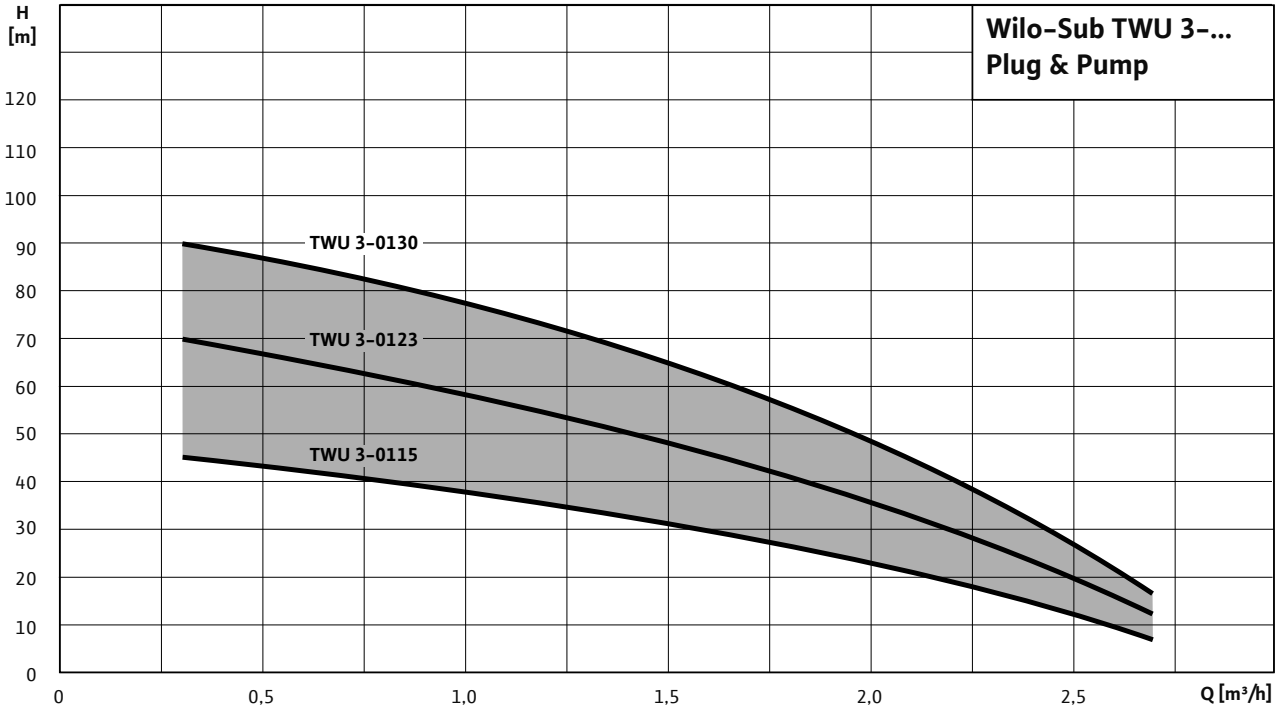

Wilo-Sub TWU 3-01.. Plug & Pump

Pump curves Wilo-Sub TWU 3-01.. Plug & Pump

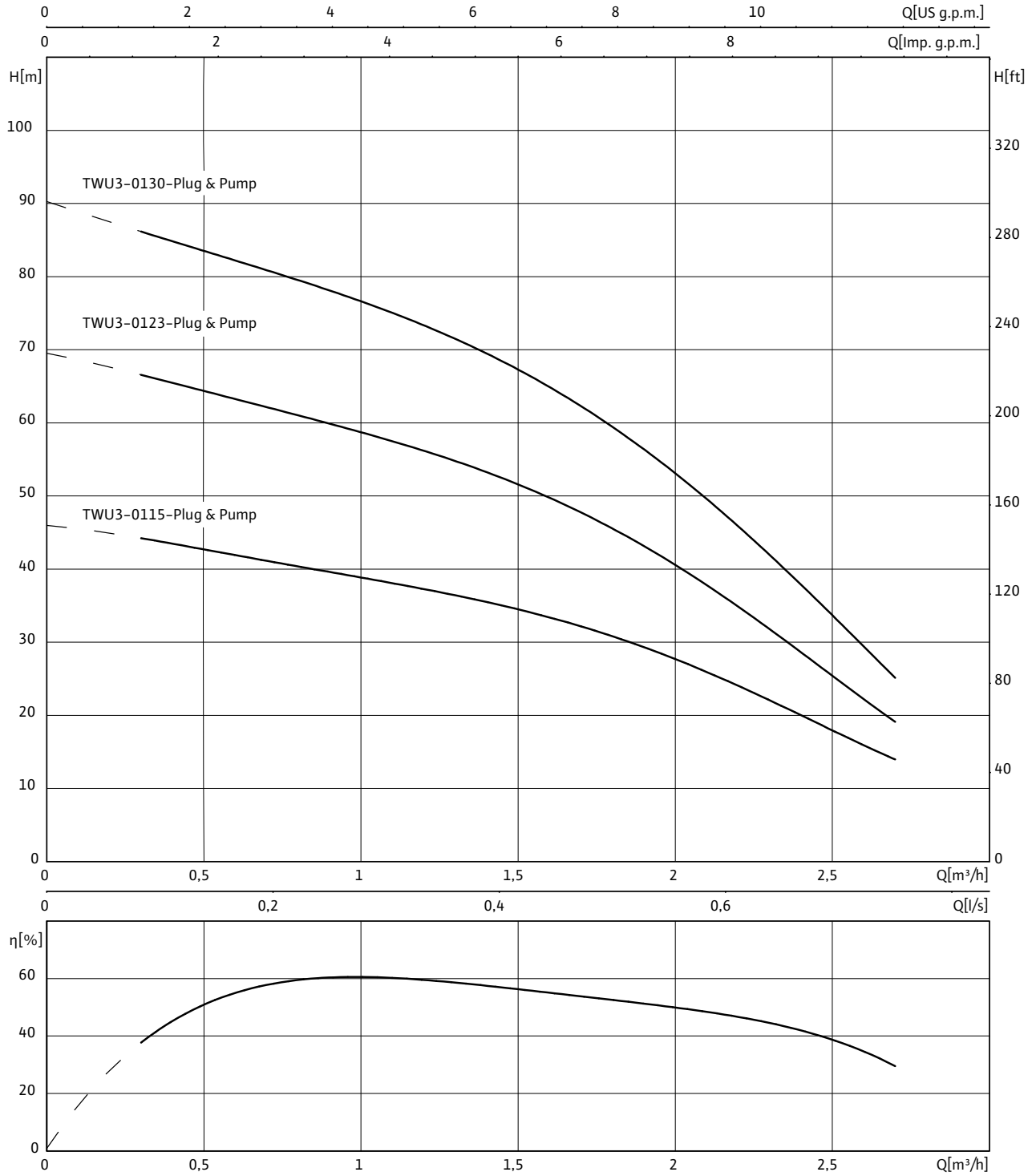

1~230 V or 3~400 V, 50 Hz, p = 1 kg/dm^3, v = 1x10^{-6} m^2/s, ISO 9906 Annex A

Wilo-Sub TWU 3-01.. Plug & Pump

Motor data

Wilo-Sub...	Mains connection	Motor diameter	Nominal motor power	Nominal current	Length of connecting cable	Cable cross-section
		Ø	P_2	I_N		
		"	kW	A	m	mm^2
TWU 3-0115-Plug&Pump/FC	1~230 V, 50 Hz	3	0.37	3.75	30	4x1.5
TWU 3-0115-Plug&Pump/DS	1~230 V, 50 Hz	3	0.37	3.75	30	4x1.5
TWU 3-0123-Plug&Pump/FC	1~230 V, 50 Hz	3	0.55	4.5	30	4x1.5
TWU 3-0123-Plug&Pump/DS	1~230 V, 50 Hz	3	0.55	4.5	30	4x1.5
TWU 3-0130-Plug&Pump/FC	1~230 V, 50 Hz	3	0.75	5.85	30	4x1.5
TWU 3-0130-Plug&Pump/DS	1~230 V, 50 Hz	3	0.75	5.85	30	4x1.5

Information for order placements

Wilo-Sub...	Mains connection		Art no.	Art. no. for cooling jacket pipe	
				for vertical installation (B)	*for horizontal installation (D)*
TWU 3-0115-Plug&Pump/FC	1~230 V, 50 Hz	L	4091647	4092485	4092485 + 4092486
TWU 3-0115-Plug&Pump/DS	1~230 V, 50 Hz	L	4091654	4092485	4092485 + 4092486
TWU 3-0123-Plug&Pump/FC	1~230 V, 50 Hz	L	4091649	4092485	4092485 + 4092486
TWU 3-0123-Plug&Pump/DS	1~230 V, 50 Hz	L	4091655	4092485	4092485 + 4092486
TWU 3-0130-Plug&Pump/FC	1~230 V, 50 Hz	L	4091650	4092485	4092485 + 4092486
TWU 3-0130-Plug&Pump/DS	1~230 V, 50 Hz	L	4091656	4092485	4092485 + 4092486

Motor efficiency based on 400 V, 50 Hz

Wilo-Sub TWU 3-01.. Plug & Pump

Dimension drawing Wilo-Sub TWU 3

A: **B:** **D:**

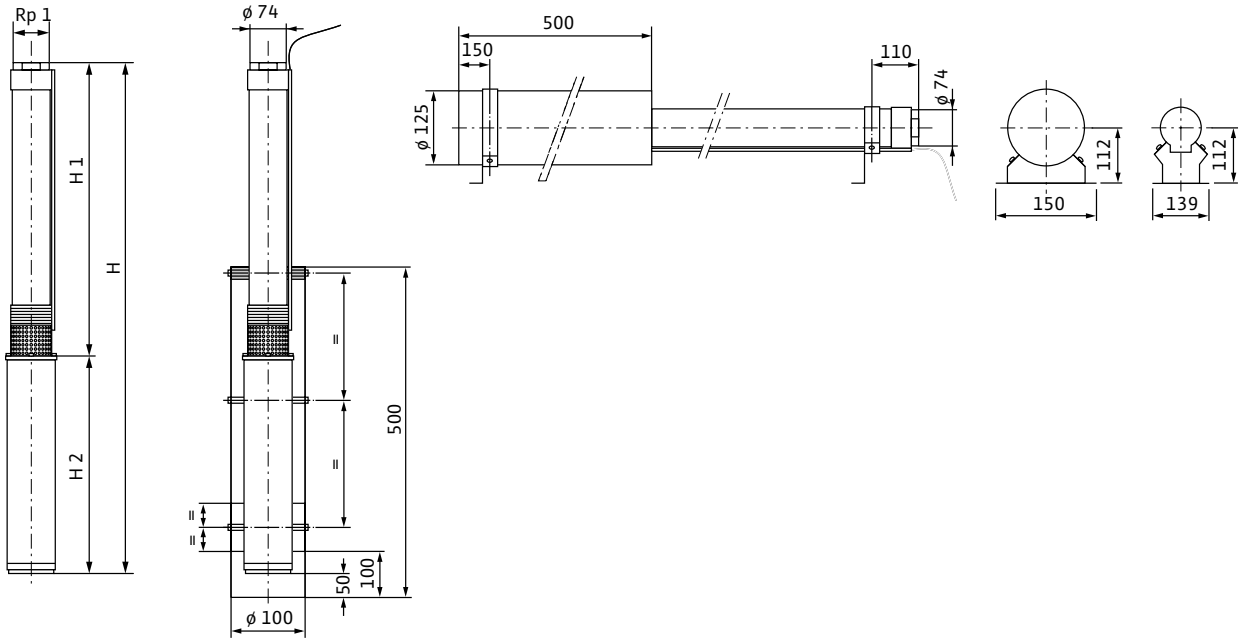

A = vertical, B = vertical with cooling jacket, D = horizontal with cooling jacket

Dimensions, weights

Wilo-Sub...	Pressure connec-tion	Dimensions			Installation	Weight of unit
		H	*H1*	*H2*		*m*
		mm				kg
TWU 3-0115-Plug&Pump/FC	Rp 1	957	580	377	A, B, D	9.3
TWU 3-0115-Plug&Pump/DS	Rp 1	957	580	377	A, B, D	9.3
TWU 3-0123-Plug&Pump/FC	Rp 1	1177	780	397	A, B, D	10.8
TWU 3-0123-Plug&Pump/DS	Rp 1	1177	780	397	A, B, D	10.8
TWU 3-0130-Plug&Pump/FC	Rp 1	1416	1000	416	A, B, D	12.4
TWU 3-0130-Plug&Pump/DS	Rp 1	1416	1000	416	A, B, D	12.4

[3)] For power cable in accordance with I_N, max. ø for threaded connection

Series description Wilo-Sub TWU 4 Plug & Pump

Wilo Plug & Pump package Sub-I

Wilo Plug & Pump package Sub-II

ErP READY APPLIES TO EUROPEAN DIRECTIVE FOR ENERGY RELATED PRODUCTS

Design
Water-supply unit with submersible-motor pump, control and complete accessories.

Type key

e.g.	**Wilo-Sub TWU 4-0804-C-P&P/FC**
TWU	Submersible pump
4	Diameter of the hydraulic unit in inches ["]
08	Nominal volume flow [m^3/h]
04	Number of hydraulic stages
C	Series generation
P&P	Plug & Pump pump system
FC	Version FC = Sub I package with Fluidcontrol DS = Sub II package with pressure switching

Application
Water-supply unit for self-sufficient water supply in the domestic sector
- Washing machines
- Garden sprinkling
- Transferring by pumping and filling
- Taps for process water

Special features/product advantages
- Simple assembly, installation and operation
- Low-wearing due to floating impellers
- Reliable motor, due to high starting torque
- Integrated non-return valve

Technical data
- Mains connection: 1~230 V, 50 Hz
- Immersed operating mode: S1
- Fluid temperature: 3-30 °C
- Minimum flow rate at motor: 0.08 m/s
- Max. sand content: 50 g/m^3
- Max. number of starts: 20/h
- Max. immersion depth: 200 m
- Protection class: IP 68
- Pressure connection: Rp 1¼

Equipment/function
- Multistage submersible-motor pump with radial impellers
- Integrated non-return valve
- NEMA coupling
- Single-phase motor
- Thermal motor protection
- Dry-running protection system (only with Wilo-Plug & Pump Sub-I package)

Materials
- Hydraulic housing: stainless steel 1.4301
- Impellers: Noryl
- Hydraulics shaft: 1.4104 stainless steel
- Motor housing: 1.4301 stainless steel
- Motor shaft: 1.4305 stainless steel

Description/design
Submersible-motor pump for vertical or horizontal installation.

Hydraulics
Multistage submersible-motor pump with radial impellers with sectional construction. Integrated non-return valve. All parts in contact with the fluid are made of corrosion-free materials.

Motor
Corrosion-free single-phase AC motor for direct starting without soft starter. Sealed and hermetically cast motor with enamel-insulated winding, resin-impregnated, self-lubricating bearing, with water-glycol filling.

Series description Wilo-Sub TWU 4 Plug & Pump

Cooling
The motor is cooled by the fluid. The motor must always be operated in submerged state. The limit values for the max. fluid temperature and the minimum flow rate must not be exceeded. Vertical installation is possible optionally with or without cooling jacket. Cooling jacket is required for horizontal installation.

Scope of delivery

Wilo-Plug & Pump Sub-I package for garden irrigation of private greenery in the domestic sector:
- Fully mounted
- 30 m connecting cable approved for potable water (cross-section: 4x1.5 mm^2)
- Switchbox with capacitor, thermal motor protection and On/Off switch
- Wilo-FluidControl (FC); automatic flow monitor and pressure controller with built-in dry-running protection
- 30 m retaining cable
- Installation parts: 2x screwed clamping ring connections, R 1¼ to R 1 reducer, 8x cable binders
- Installation and operating instructions

Wilo-Plug & Pump Sub-II package for self-sufficient water supply in single-family and multi-family houses:
- Fully mounted
- 30 m connecting cable approved for potable water (cross-section: 4x1.5 mm^2)
- Switchbox with capacitor, thermal motor protection and On/Off switch
- Wilo pressure switching 0 – 10 bar, including 18 l diaphragm expansion tank, pressure gauge, check valve and pressure switch
- 30 m retaining cable
- Installation parts: T-iron, R 1¼ to R 1 reducer, 8x cable binders
- Installation and operating instructions

Accessories
- Cooling jacket pipes
- Cable kits for potable and process water
- Switchgears
- Connection and installation material

General notes - ErP (ecological design-) directive
- The benchmark for most efficient water pumps is MEI ≥ 0.70
- The efficiency of a pump with a trimmed impeller is usually lower than that of a pump with the full impeller diameter. The trimming of the impeller will adapt the pump to a fixed duty point, leading to reduced energy consumption. The minimum efficiency index (MEI) is based on the full impeller diameter.
- The operation of this water pump with variable duty points may be more efficient and economic when controlled, for example, by the use of a variable speed drive that matches the pump duty to the system.
- Information on benchmark efficiency is available at **www.europump.org/efficiencycharts**

Configuration
- No suction mode is possible with these units!
- The unit must be fully immersed in water during operation.

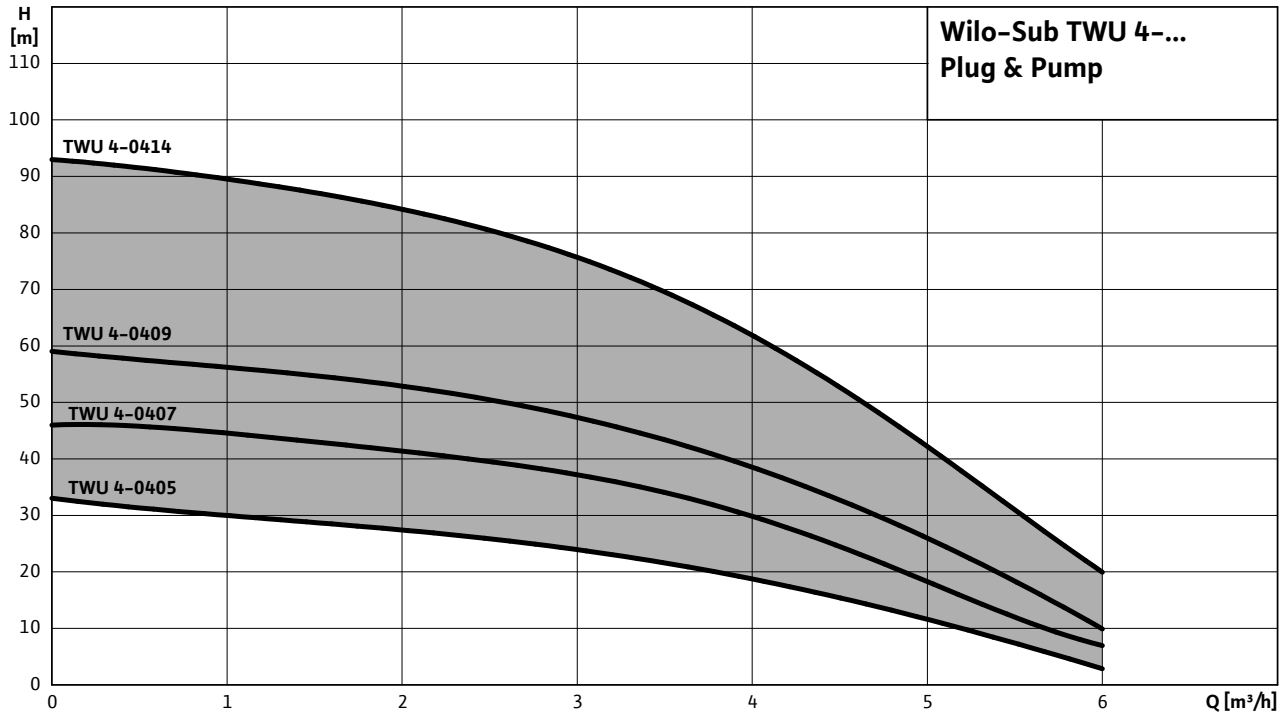

Wilo-Sub TWU 4-04.. Plug & Pump

Pump curves Wilo-Sub TWU 4-04.. Plug & Pump

Minimum Efficiency Index (MEI): ≥ 0.7

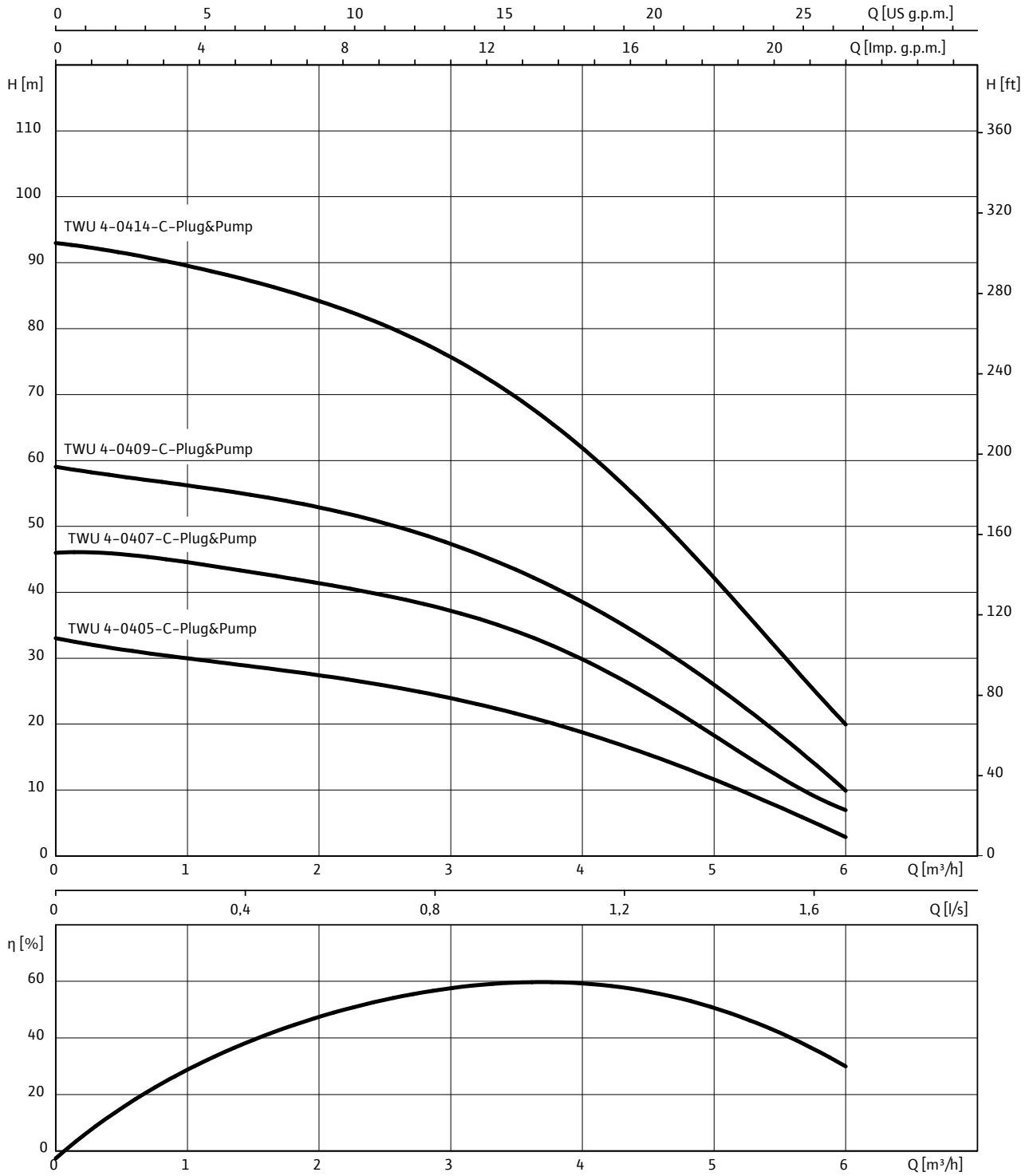

1~230 V or 3~400 V, 50 Hz, p = 1 kg/dm^3, v = 1x10^{-6} m^2/s, ISO 9906 Annex A, η = pump efficiency

Wilo-Sub TWU 4-04.. Plug & Pump

Motor data						
Wilo-Sub...	**Mains connection**	**Motor diameter**	**Nominal motor power**	**Nominal current**	**Length of connecting cable**	**Cable cross-section**
		Ø	P_2	I_N		
		"	kW	A	m	mm^2
TWU 4-0405-C-Plug&Pump/FC	1~230 V, 50 Hz	4	0.37	3.4	30	4x1.5
TWU 4-0407-C-Plug&Pump/FC	1~230 V, 50 Hz	4	0.55	4.4	30	4x1.5
TWU 4-0407-C-Plug&Pump/DS	1~230 V, 50 Hz	4	0.55	4.4	30	4x1.5
TWU 4-0409-C-Plug&Pump/FC	1~230 V, 50 Hz	4	0.75	5.9	30	4x1.5
TWU 4-0409-C-Plug&Pump/DS	1~230 V, 50 Hz	4	0.75	5.9	30	4x1.5
TWU 4-0414-C-Plug&Pump/DS	1~230 V, 50 Hz	4	1.1	7.8	30	4x1.5

Information for order placements					
Wilo-Sub...	**Mains connection**	🚚	**Art no.**	**Art. no. for cooling jacket pipe**	
				for vertical installation (B)	*for horizontal installation (D)*
TWU 4-0405-C-Plug&Pump/FC	1~230 V, 50 Hz	L	6049385	4064430	6037935
TWU 4-0407-C-Plug&Pump/FC	1~230 V, 50 Hz	L	6049386	4064430	6037935
TWU 4-0407-C-Plug&Pump/DS	1~230 V, 50 Hz	L	6049388	4064430	6037935
TWU 4-0409-C-Plug&Pump/FC	1~230 V, 50 Hz	L	6049387	4064430	6037935
TWU 4-0409-C-Plug&Pump/DS	1~230 V, 50 Hz	L	6049389	4064430	6037935
TWU 4-0414-C-Plug&Pump/DS	1~230 V, 50 Hz	L	6049390	4064430	6037935

Wilo-Sub TWU 4-04.. Plug & Pump

Dimension drawing Wilo-Sub TWU 4 P&P

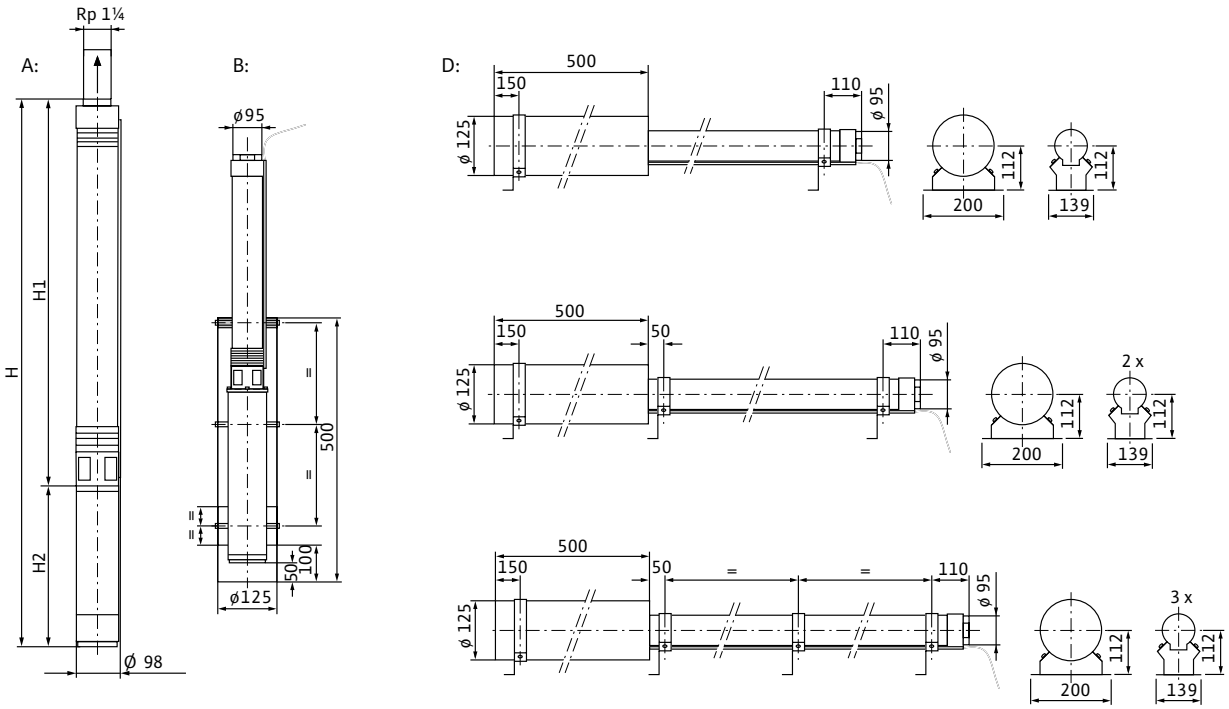

Dimensions, weights						
Wilo-Sub...	**Pressure connection**	**Dimensions**			**Installation**	**Weight of unit**
		H	*H1*	*H2*		*m*
		mm				kg
TWU 4-0405-C-Plug&Pump/FC	Rp 1¼	507	257	250	A, B, D	9.5
TWU 4-0407-C-Plug&Pump/FC	Rp 1¼	566	301	265	A, B, D	11.1
TWU 4-0407-C-Plug&Pump/DS	Rp 1¼	566	301	265	A, B, D	11.1
TWU 4-0409-C-Plug&Pump/FC	Rp 1¼	639	344	295	A, B, D	13.9
TWU 4-0409-C-Plug&Pump/DS	Rp 1¼	639	344	295	A, B, D	13.9
TWU 4-0414-C-Plug&Pump/DS	Rp 1¼	792	452	340	A, B, D	15.3

Series description Wilo-Sub TWI 5/TWI 5-SE

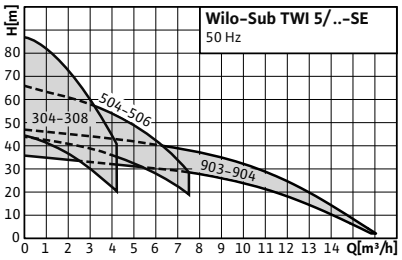

Design
5" submersible pump in stainless steel, multistage

Type key

Example:	**TWI5-SE 304 EM-FS**
TWI	Submersible pump made of stainless steel
5	Pump diameter (5")
[Space]	Suction through strainer
SE	Connection G 1¼ on suction side (for floating extractor)
3	Nominal flow rate Q in m³/h (at optimum efficiency)
04	Number of steps
EM	Single-phase current, 1~230 V, 50 Hz
DM	Three-phase current, 3~400 V, 50 Hz
FS	With float switch

Application
Submersible pumps
- Pumping from wells, rainwater storage tanks and vessels
- Irrigation, sprinkling and pumping out
- Water supply
- Rainwater utilisation

Special features/product advantages
- Single-phase AC current version
  - Pre-installed with switchbox
  - Thermal motor protection
- FS version with integrated float switch
- Self-cooling motor (installation outside water possible)
- TWI 5 version with standard inlet basket
- Variants:
  - SE: with lateral inlet connecting piece
  - FS: with built-in float switch

Technical data
- Mains connection 1~230 V, 50 Hz / 3~400 V, 50 Hz
- Fluid temperature max. +5 °C to +35 °C
- Max. operating pressure 10 bar
- Protection class IP 68
- Pressure-side connection Rp 1¼
- Connection on suction side for SE version Rp 1¼

Equipment/function
- 20 m safety cable
- 20 m H07RN-F cable
- Single-phase AC version
  - Pre-installed with switchbox
  - Overcurrent protection of the motor

Materials
- Pump housing: Stainless steel 1.4301
- Impeller: 1.4301
- Shaft: 1.4301
- Mechanical seal: SIC/SIC and carbon/ceramic
- Stage chambers: 1.4301
- Diffuser/injector: 1.4301
- Gaskets: NBR
- Multistage construction complete in AISI304
- KTW & TÜV-certified
- Double mechanical seal SIC/SIC
- Detachable connection cable
- Generously dimensioned water-cooled motor
- Scope of delivery includes 20 m connecting cable and safety cable

Scope of delivery
- Pump with 20 m connecting cable
- Safety cable made of polypropylene
- Installation and operating instructions

Accessories
- Gate valve
- Non-return valve
- Switchgear and motor protection
- Protection switch
- Float switch
- Acoustic overflow alarm
- WILO Fluidcontrol (EK)
- Pressure controller
- Suction filter with floater:
  - Coarse filter
  - Fine filter

Pump curves Wilo-Sub TWI 5/TWI 5-SE

Wilo-Sub TWI 5 / ..-SE 304 - 308

n = 2850 rpm

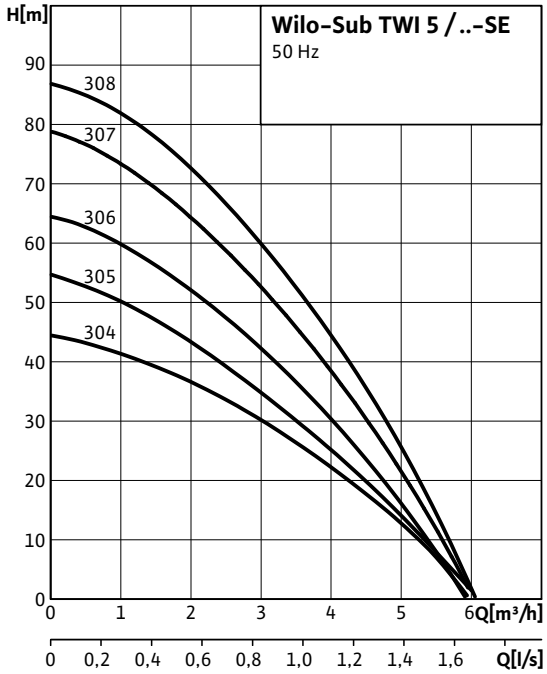

Wilo-Sub TWI 5 / ..-SE 504 - 506

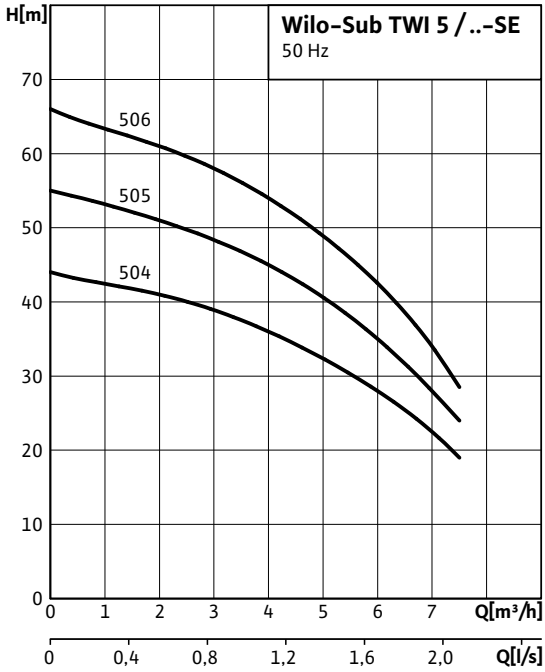

Wilo-Sub TWI 5 / ..-SE 903 - 904

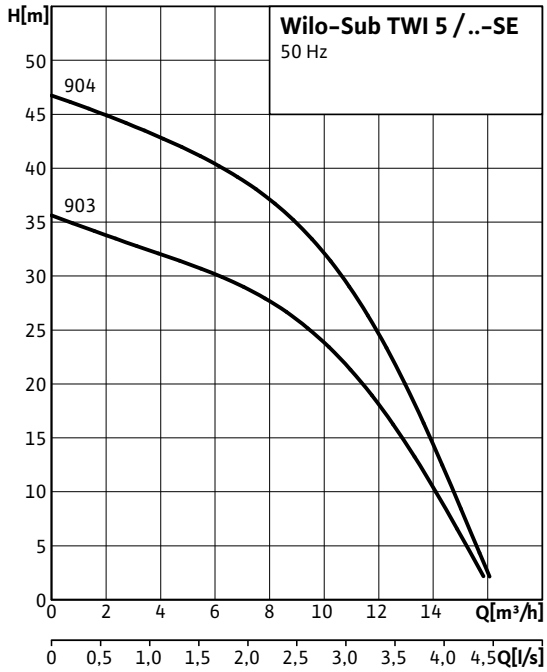

Pump curves Wilo-Sub TWI 5/TWI 5-SE

Motor data				
Wilo-Sub...	**Nominal motor power**	**Power consumption**	**Nominal current**	
			1~230 V, 50 Hz	3~230/400 V, 50 Hz
	P_2	P_1	I_N	
	kW		A	
TWI 5 304	0.55	0.85	4.50	–
TWI 5 304 FS	0.55	0.85	4.50	–
TWI 5 305	0.75	1	4.90	–
TWI 5 305 FS	0.75	1	4.90	–
TWI 5 306	0.75	1.2	5.60	2.30 /0.00
TWI 5 306 FS	0.75	1.2	5.60	–
TWI 5 307	1.1	1.46	6.90	–
TWI 5 307 FS	1.1	1.46	6.90	–
TWI 5 308	1.1	1.45	7.40	2.70 /0.00
TWI 5 308 FS	0.55	1.6	7.40	–
TWI 5 504	0.75	1.15	5.20	–
TWI 5 504 FS	0.75	1.15	5.20	–
TWI 5 505	0.9	1.4	6.50	–
TWI 5 505 FS	0.9	1.4	6.50	–
TWI 5 506	1.1	1.7	7.90	–
TWI 5 506 FS	1.1	1.7	7.90	–
TWI 5 903	1.1	1.4	7.20	2.50 /0.00
TWI 5 904	1.5	1.75	10.10	3.20 /0.00
TWI 5-SE 304	0.55	0.85	4.50	–
TWI 5-SE 304 FS	0.55	0.85	4.50	–
TWI 5-SE 305	0.75	1	4.90	–
TWI 5-SE 305 FS	0.75	1	4.90	–
TWI 5-SE 306	0.75	1.2	5.60	2.30 /0.00
TWI 5-SE 306 FS	0.75	1.2	5.60	–
TWI 5-SE 307	1.1	1.46	6.90	–
TWI 5-SE 307 FS	1.1	1.46	6.90	–
TWI 5-SE 308	1.1	1.45	7.40	2.70 /0.00
TWI 5-SE 308 FS	1.1	1.6	7.40	–
TWI 5-SE 504	0.75	0.85	5.20	–
TWI 5-SE 504 FS	0.75	1.15	5.20	–
TWI 5-SE 505	0.9	1.4	6.50	–
TWI 5-SE 505 FS	0.9	1.4	6.50	–
TWI 5-SE 506	1.1	1.7	7.90	–
TWI 5-SE 506 FS	1.1	1.7	7.90	–
TWI 5-SE 903	1.1	1.4	7.20	2.50 /0.00
TWI 5-SE 904	1.5	1.75	10.10	3.20 /0.00

Motor data, dimensions, weights Wilo-Sub TWI 5/TWI 5-SE

Dimension drawing

TWI 5

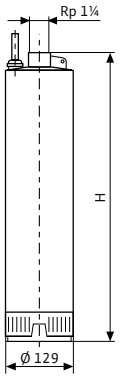

Dimension drawing

TWI 5-SE

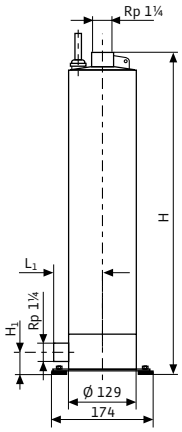

Dimensions, weights

Wilo-Sub...	Dimensions			Weight approx.
	H	*H1*	*L1*	*m*
	mm			kg
TWI 5 304	480	–	–	15
TWI 5 304 FS	480	–	–	15.3
TWI 5 305	504	–	–	16.8
TWI 5 305 FS	480	–	–	17
TWI 5 306	528	–	–	17.3
TWI 5 306 FS	504	–	–	17.5
TWI 5 307	552	–	–	19
TWI 5 307 FS	528	–	–	19.3
TWI 5 308	576	–	–	19.5
TWI 5 308 FS	552	–	–	19.8
TWI 5 504	480	–	–	15.5
TWI 5 504 FS	480	–	–	15.8
TWI 5 505	504	–	–	18.5
TWI 5 505 FS	504	–	–	18.3
TWI 5 506	528	–	–	18.8
TWI 5 506 FS	528	–	–	19
TWI 5 903	504	–	–	17.3
TWI 5 904	584	–	–	20.3
TWI 5-SE 304	539	55	93.5	15.8
TWI 5-SE 304 FS	539	55	93.5	16
TWI 5-SE 305	563	55	93.5	17.5
TWI 5-SE 305 FS	563	55	93.5	17.8
TWI 5-SE 306	587	55	93.5	18
TWI 5-SE 306 FS	587	55	93.5	18.3
TWI 5-SE 307	611	55	93.5	19.8
TWI 5-SE 307 FS	611	55	93.5	20
TWI 5-SE 308	635	55	93.5	20.3
TWI 5-SE 308 FS	635	55	93.5	20.5

Motor data, dimensions, weights Wilo-Sub TWI 5/TWI 5-SE

Dimensions, weights				
Wilo-Sub...	**Dimensions**			**Weight approx.**
	H	*H1*	*L1*	*m*
	mm			kg
TWI 5-SE 504	539	55	93.5	16.5
TWI 5-SE 504 FS	539	55	93.5	16.8
TWI 5-SE 505	563	55	93.5	18.8
TWI 5-SE 505 FS	563	55	93.5	19
TWI 5-SE 506	587	55	93.5	19.5
TWI 5-SE 506 FS	587	55	93.5	19.8
TWI 5-SE 903	563	55	93.5	18
TWI 5-SE 904	643	55	93.5	21

System examples for Wilo-Sub TWI 5/..-SE

Water supply system (AC version)

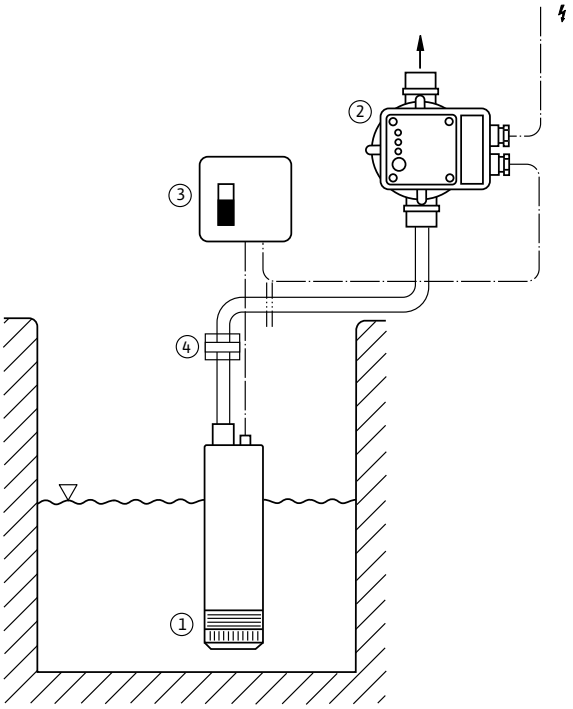

Key

1 Submersible pump Wilo-Sub TWI 5 (1~)

2 Wilo-Fluidcontrol electronically controlled flow monitor and pressure controller with non-return valve and protection against low water level´
max. switching capacity $P_2 \leq 1.5$ kW (max. current 10 A) and Wilo-Fluidcontrol wall bracket (accessories)

3 Switchbox with On/Off switch (in the scope of delivery of Wilo-Sub TWI)

4 Wilo quick coupling (See Accessories – Water supply)

Water supply system (single-phase version)

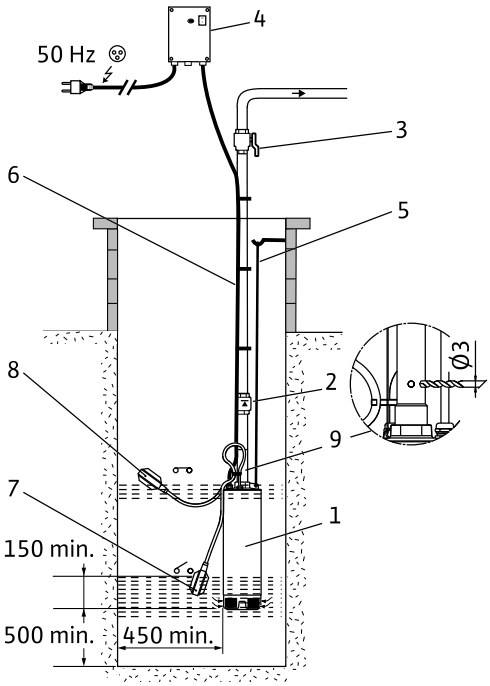

Key

1 Submersible-motor pump Wilo-Sub TWI 5 FS (1~)

2 Non-return valve

3 Gate valve

4 AC connection box

5 Carrying cable

6 Power supply cable

7 Float in lower position

8 Float in upper position

9 Venting hole (to drilled by customer, Ø 3 mm)

System examples for Wilo-Sub TWI 5/..-SE

Water-supply unit (three-phase version)

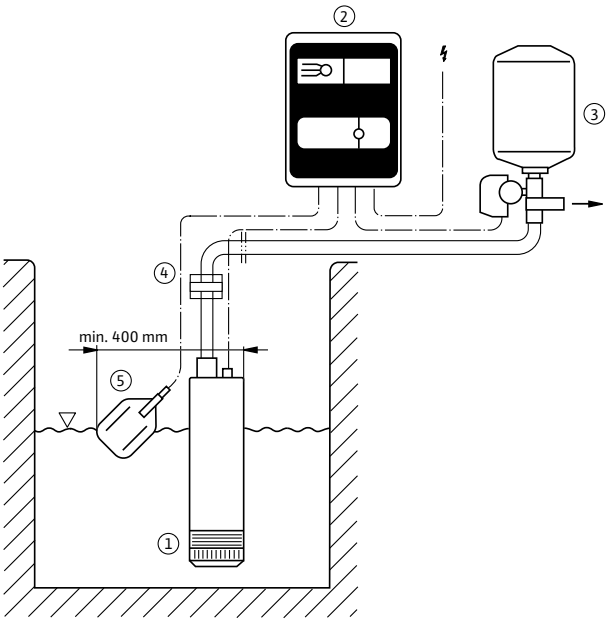

Key

1 Submersible pump Wilo-Sub TWI 5 (3~)

2 Switchgear ER-1 with switching capacity $P_2 \leq 4$ kW (max. current 10 A)
With built-in electronic motor protection, Manual-0-Automatic switch, pump switching by pressure switch and potential-free collective fault signal for the wall fixation

3 WVA pressure switching kit with special non-return valve, pressure switch, pressure gauge, 8-l diaphragm pressure vessel, completely assembled (for wall-mounted installation using equipment provided by customer)

4 Wilo quick coupling (See Accessories – Water supply)

5 WA 65 protection against low water level with connection cable (float switch)

Note:
Multi-pump systems (installation clearance for the pumps at least 1 m) can be dimensioned at customer request.

Water supply system (single-phase version)

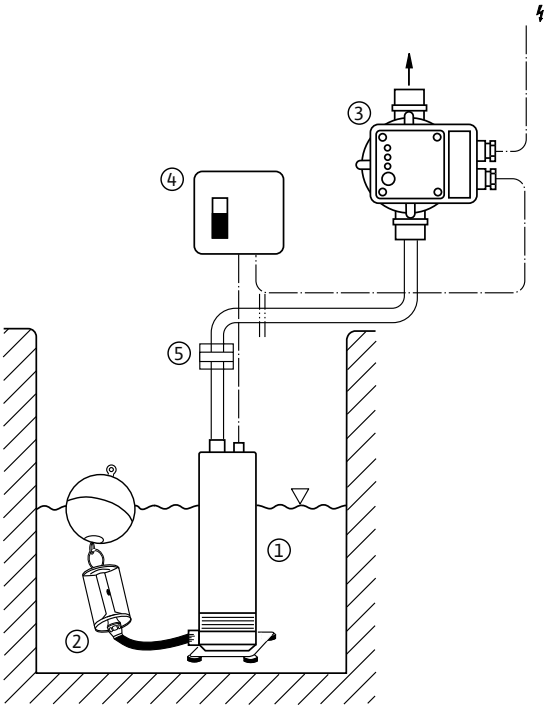

Key

1 Submersible pump Wilo-Sub TWI 5-SE (1~)

2 Floating suction filter Ø 1" with screwed connection R 1¼

3 Wilo-Fluidcontrol electronically controlled flow monitor and pressure controller with non-return valve and protection against low water level max. switching capacity $P_2 \leq 1.5$ kW (max. current 10 A) and Wilo-Fluidcontrol wall bracket (accessories)

4 Switchbox with on/off switch
(included in the scope of delivery of Wilo-Sub TWI 5-SE (1~))

5 Wilo quick coupling (See Accessories – Water supply)

System examples for Wilo-Sub TWI 5/..-SE

Water-supply unit (three-phase version)

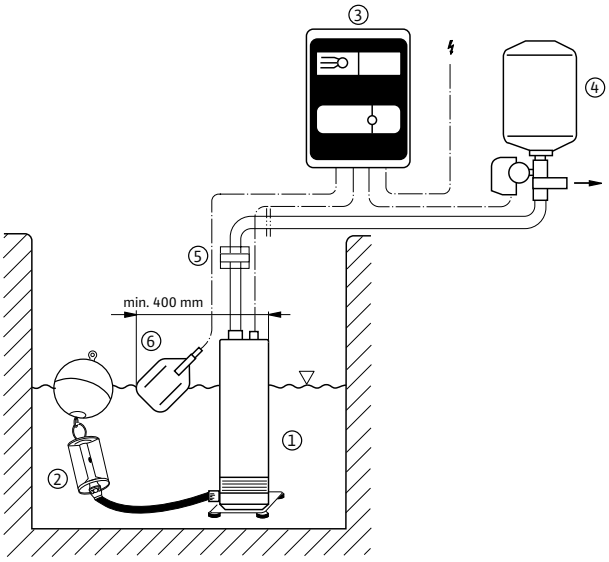

Note:
Multi-pump systems (installation clearance for the pumps at least 1 m) can be dimensioned at customer request.

Key

1 Submersible pump Wilo-Sub TWI 5-SE (3~)
2 Floating suction filter Ø 1" with screwed connection R 1¼
3 Switchgear ER-1 with switching capacity $P_2 \leq 4$ kW (max. current 10 A) With built-in electronic motor protection, Manual-0-Automatic switch, pump switching by pressure switch and potential-free collective fault signal for the wall fixation
4 WVA pressure switching kit with special non-return valve, pressure switch, pressure gauge, 8-l diaphragm pressure vessel, completely assembled (for wall-mounted installation using equipment provided by customer)
5 Wilo quick coupling (See Accessories – Water supply)
6 WA 65 protection against low water level with connection cable (float switch)

Water-supply unit example of dry well installation (three-phase version)

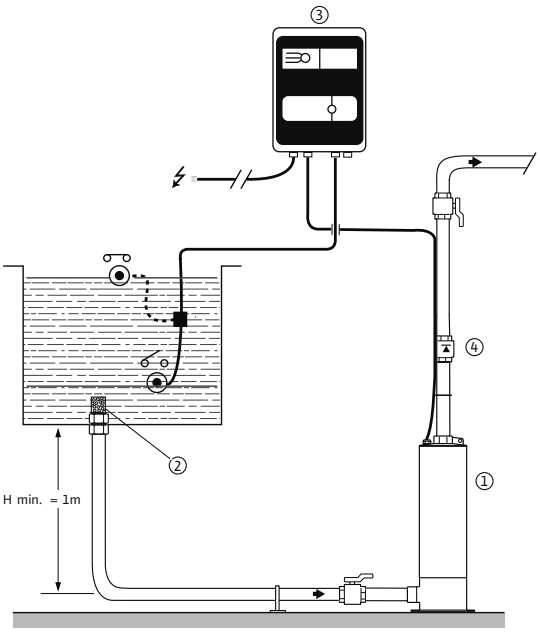

Note:
Multi-pump systems (installation clearance for the pumps at least 1 m) can be dimensioned at customer request.

Key

1 Submersible-motor pump Wilo-Sub TWI 5-SE (3~)
2 Strainer
3 Switchgear ER-1 with switching capacity $P_2 \leq 4$ kW (max. current 10 A)
With built-in electronic motor protection, Manual-0-Automatic switch, pump switching by pressure switch and potential-free collective fault signal for the wall fixation
4 Non-return valve

Domestic water supply

Non-self-priming pumps and systems

Series description Wilo-Sub TWI 5-SE Plug & Pump

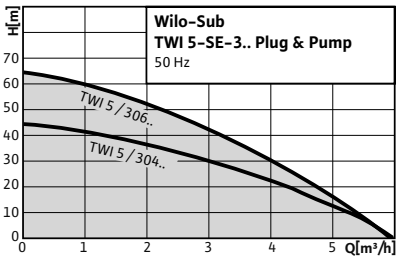

Design
Water-supply system with submersible pump, control and complete accessories

Type key

Example:	**TWI5-SE 304 EM-FS P&P**
TWI	Submersible-motor pump made of stainless steel
5	Pump diameter (5")
[Space]	Suction through strainer
SE	Connection G 1¼ on suction side (for floating extractor)
3	Nominal flow rate Q in m³/h (at optimum efficiency)
04	Number of steps
EM	Single-phase current, 1~230 V, 50 Hz
DM	Three-phase current, 3~400 V, 50 Hz
FS	With float switch
[Space]	no float switch
P&P	Plug & Pump version

Application
- Pumping from wells, rainwater storage tanks and vessels
- Irrigation, sprinkling or pumping out
- Water supply
- Rainwater utilisation

Special features/product advantages
- Ready-to-plug
- Complete accessories
- Thermal motor protection
- Pump (housing, stages, impellers) constructed entirely of 1.4301 stainless steel (AISI 304)
- Installation possible outside water

Technical data
- Mains connection 1~230 V, 50 Hz
- Fluid temperature +5 °C to +35 °C
- Max. operating pressure 10 bar
- Protection class: IP 68
- Suction- and pressure-side connection Rp 1

Equipment/function
- Submersible pump
- Mains connection 1~230 V, 50 Hz
- Connection cable
- Thermal motor protection switch

Materials
- Pump housing stainless steel 1.4301
- Impeller made of Noryl
- Shaft made of 1.4005 stainless steel
- Mechanical seal made of carbon/ceramic
- Stage chambers made of Noryl
- Seal made of NBR

Scope of delivery
- Pump
- Complete control
- Safety valve made of polypropylene
- Fine suction filter
- Suction hose
- Installation and operating instructions

Accessories
- Gate valve
- Non-return valve
- Switchgear and motor protection
- Protection switch
- Float switch
- Acoustic overflow alarm
- Pressure controller
- Suction filter with floater:
  - Coarse filter
  - Fine filter

Pump curves, motor data, dimensions Wilo-Sub TWI 5-SE Plug & Pump

Pump curves

n = 2850 rpm

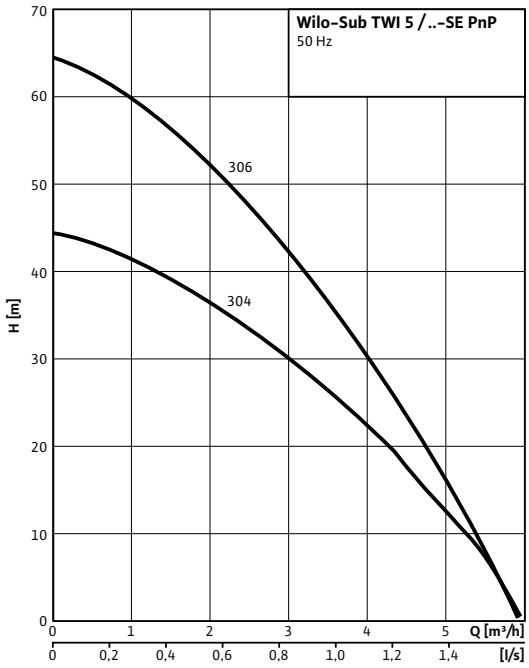

Dimension drawing

Wilo-Sub TWI 5-SE Plug & Pump

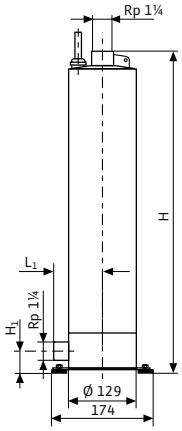

Technical data

Wilo-Sub...	Dimensions					Power consumption	Nominal motor power
	H	*H1*	*L1*	*Ø D1*	*Ø D2*	P_1	P_2
	mm			Rp		kW	
TWI 5-SE-304 EM P&P	539	55	93.5	1¼	1¼	0.85	0.55
TWI 5-SE-306 EM P&P	587	55	93.5	1¼	1¼	1.2	0.75

System example for Wilo-Sub TWI 5-SE Plug & Pump

Water supply system (single-phase version)

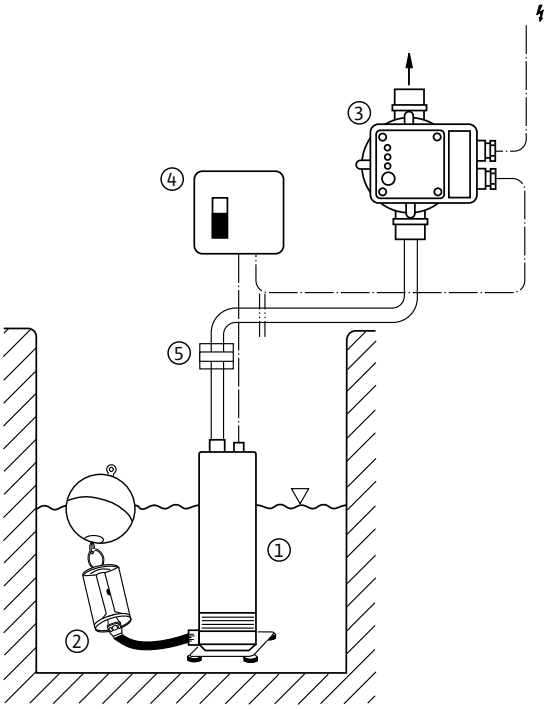

Key

1 Submersible pump Wilo-Sub TWI 5-SE (1~)

2 Floating suction filter Ø 1" with screwed connection R 1¼

3 Wilo-Fluidcontrol electronically controlled flow monitor and pressure controller with non-return valve and protection against low water level max. switching capacity $P_2 \leq 1.5$ kW (max. current 10 A) and Wilo-Fluidcontrol wall bracket (accessories)

4 Switchbox with on/off switch
(included in the scope of delivery of Wilo-Sub TWI 5-SE (1~))

5 Wilo quick coupling (See Accessories – Water supply)

Series overview

Series	**Wilo-Sub TWU 3**	**Wilo-Sub TWU 3 HS**
Product photo		
Duty chart	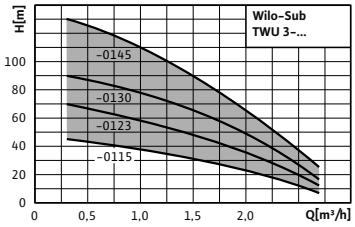	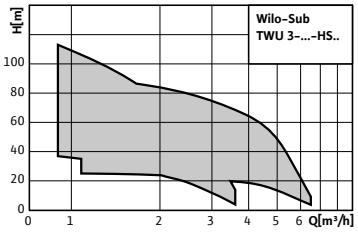
Design	Submersible pump, multistage	Submersible pump, multistage
Application	• For private water supply from boreholes, wells and rainwater storage tanks • For domestic water supply, sprinkling and irrigation • For pumping water without long-fibre and abrasive constituents	• For private water supply from boreholes, wells and rainwater storage tanks • For domestic water supply, sprinkling and irrigation • For pumping water without long-fibre and abrasive constituents
H_{max}	130 m	96 m
Q_{max}	2.6 m^3/h	6.5 m^3/h
Special features/ product advantages	• Rewindable motor • Integrated non-return valve • Parts that come in contact with fluids are corrosion-free • Pump connection head and flange made of stainless steel • Vertical and horizontal installation possible • Single-phase version with starting capacitor and On/Off switch	• Expanded flow capacity by increased rotation speed (up to 8400 rpm) • Rewindable motor • Integrated non-return valve • Parts that come in contact with fluids are corrosion-free • Including frequency converter (HS-E...: external, installed in the piping; HS-I...: built into the motor) • Vertical and horizontal installation possible
Further information	Series information from page 112 Wilo online catalogue at www.wilo.com	Series information from page 117 Wilo online catalogue at www.wilo.com

Domestic water supply

Submersible pumps

Series overview

Series	**Wilo-Sub TWU 4**	**Wilo-Sub TWU 4-...-GT**	**Wilo-Sub TWU 4-QC**
Product photo			
Duty chart	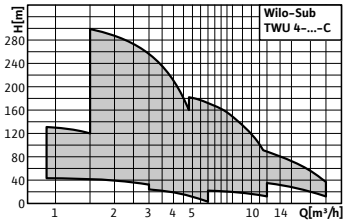	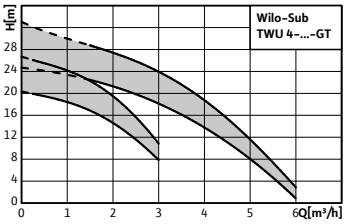	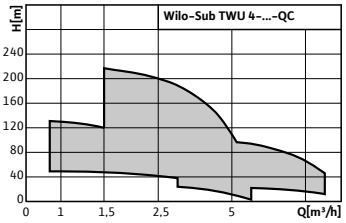
Design	Submersible pump, multistage	Submersible-motor pump, multi-stage	Submersible pump, multistage
Application	• For water supply from boreholes and rainwater storage tanks • For domestic water supply, sprinkling and irrigation • Pressure boosting • Lowering the water level • For pumping water without long-fibre and abrasive constituents	• Geothermal applications • For water supply from boreholes and rainwater storage tanks • For domestic water supply, sprinkling and irrigation • Pressure boosting • Lowering the water level • For pumping water without long-fibre and abrasive constituents	• For water supply from boreholes and rainwater storage tanks • For domestic water supply, sprinkling and irrigation • Pressure boosting • Lowering the water level • For pumping water without long-fibre and abrasive constituents
H_{max}	322 m	33 m	231 m
Q_{max}	22 m^3/h	6 m^3/h	12 m^3/h
Special features/ product advantages	• Parts in contact with fluid are corrosion-free • Low-wearing due to floating impellers • Integrated non-return valve • Vertical and horizontal installation possible	• Parts that come in contact with fluids are corrosion-free • Low-wearing due to floating impellers • Integrated non-return valve • Simple and quick extension of the motor cable without dismantling the pump (for QC version) • Vertical and horizontal installation possible	• Parts that come in contact with fluids are corrosion-free • Low-wearing due to floating impellers • Integrated non-return valve • Quick and easy extension of motor cable, without dismantling the pump • Vertical and horizontal installation possible
Further information	Series information from page 128 Wilo online catalogue at www.wilo.com	Series information from page 142 Wilo online catalogue at www.wilo.com	Series information from page 147 Wilo online catalogue at www.wilo.com

Series overview

Series	**Wilo-Sub TWI 4-..-B**
Product photo	
Duty chart	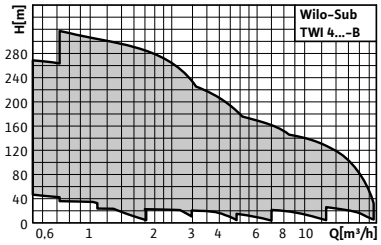
Design	Submersible pump, multistage
Application	• For water and potable water supply from boreholes and rainwater storage • Process water supply • For municipal water supply, sprinkling and irrigation • Pressure boosting • Lowering the water level • For pumping water in industrial applications • For pumping water without long-fibre and abrasive constituents
H_{max}	315 m
Q_{max}	21 m^3/h
Special features/ product advantages	• Easy maintenance due to rapid installation and dismantling • Integrated non-return valve • Vertical and horizontal installation possible
Further information	Series information from page 158 Wilo online catalogue at www.wilo.com

Series description Wilo-Sub TWU 3

Design
Submersible pump, multistage

Type key

e.g.	**Wilo-Sub TWU 3-0115**
TWU	Submersible pump
3	Diameter of the hydraulic unit in inches ["]
01	Nominal volume flow [m^3/h]
15	Number of hydraulic stages

Application
- For private water supply from boreholes, wells and rainwater storage tanks
- For domestic water supply, sprinkling and irrigation
- For pumping water without long-fibre and abrasive constituents

Special features/product advantages
- Rewindable motor
- Integrated non-return valve
- Parts that come in contact with fluids are corrosion-free
- Pump connection head and flange made of stainless steel
- Vertical and horizontal installation possible
- Single-phase version with starting capacitor and On/Off switch

Technical data
- Mains connection: 1~230 V, 50 Hz or 3~400 V, 50 Hz
- Immersed operating mode: S1
- Fluid temperature: 3-35 °C
- Minimum flow rate at motor: 0.08 m/s
- Max. sand content: 50 g/m^3
- Max. number of starts: 30 /h
- Max. immersion depth: 150 m
- Protection class: IP 58
- Pressure connection: Rp 1

Equipment/function
- Multistage submersible-motor pump with radial impellers
- Integrated non-return valve
- NEMA coupling
- Single-phase or three-phase AC motor
- Integrated thermal motor protection for single-phase motor

Materials
- Hydraulic housing: 1.4301 stainless steel
- Impellers: polycarbonate
- Hydraulics shaft: 1.4104 stainless steel
- Motor housing: 1.4301 stainless steel
- Motor shaft: 1.4305 stainless steel

Description/design
Submersible-motor pump for vertical or horizontal installation.

Hydraulics
Multistage submersible-motor pump with radial impellers with sectional construction. Integrated non-return valve. All parts in contact with the fluid are made of corrosion-free materials.

Motor
Corrosion-free single-phase or three-phase motor for direct starting, with rewindable motor, oil-filled, self-lubricating bearing.

Cooling
The motor is cooled by the fluid. The motor must always be operated in submerged state. The limit values for the max. fluid temperature and the minimum flow rate must not be exceeded. Vertical installation is possible optionally with or without cooling jacket. Cooling jacket is required for horizontal installation.

Options
- Motor versions for special voltages 3~230 V, 50 Hz; 1~230 V, 60 Hz; 3~380 V, 60 Hz

Scope of delivery
- Hydraulics + motor fully assembled
- 1.8 m connecting cable approved for potable water (cross-section: 4x1.5 mm^2)
- Single-phase version including switchbox with capacitor, thermal motor protection and On/Off switch
- Installation and operating instructions

Accessories
- Cooling jacket pipes
- Diaphragm pressure vessel
- Cable kits for potable and process water
- Float switch
- Switchgears
- Connection and installation material

Series description Wilo-Sub TWU 3

Configuration

- No suction mode is possible with these units!
- The unit must be fully immersed in water during operation.

Pump curves

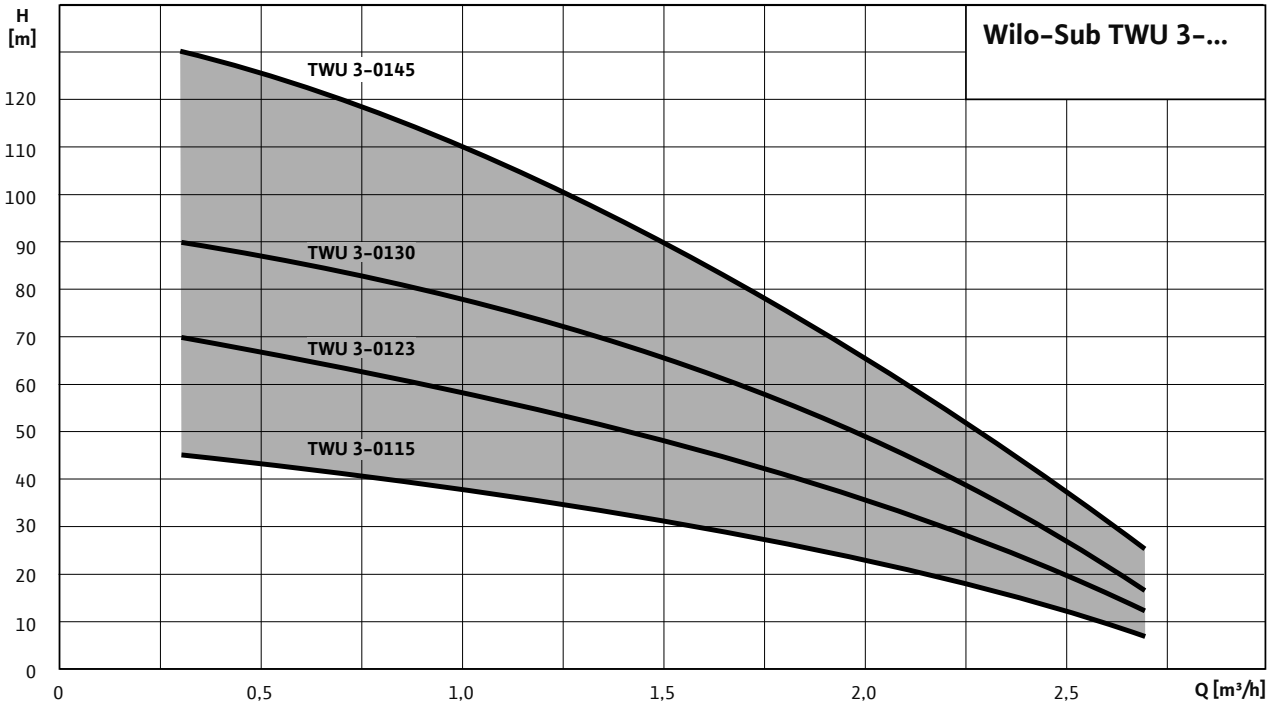

1~230 V, 50 Hz, p = 1 kg/dm^3, v = 1x10^{-6} m^2/s, ISO 9906 Annex A, η = pump efficiency

Wilo-Sub TWU 3-01..

Pump curves Wilo-Sub TWU 3-01..

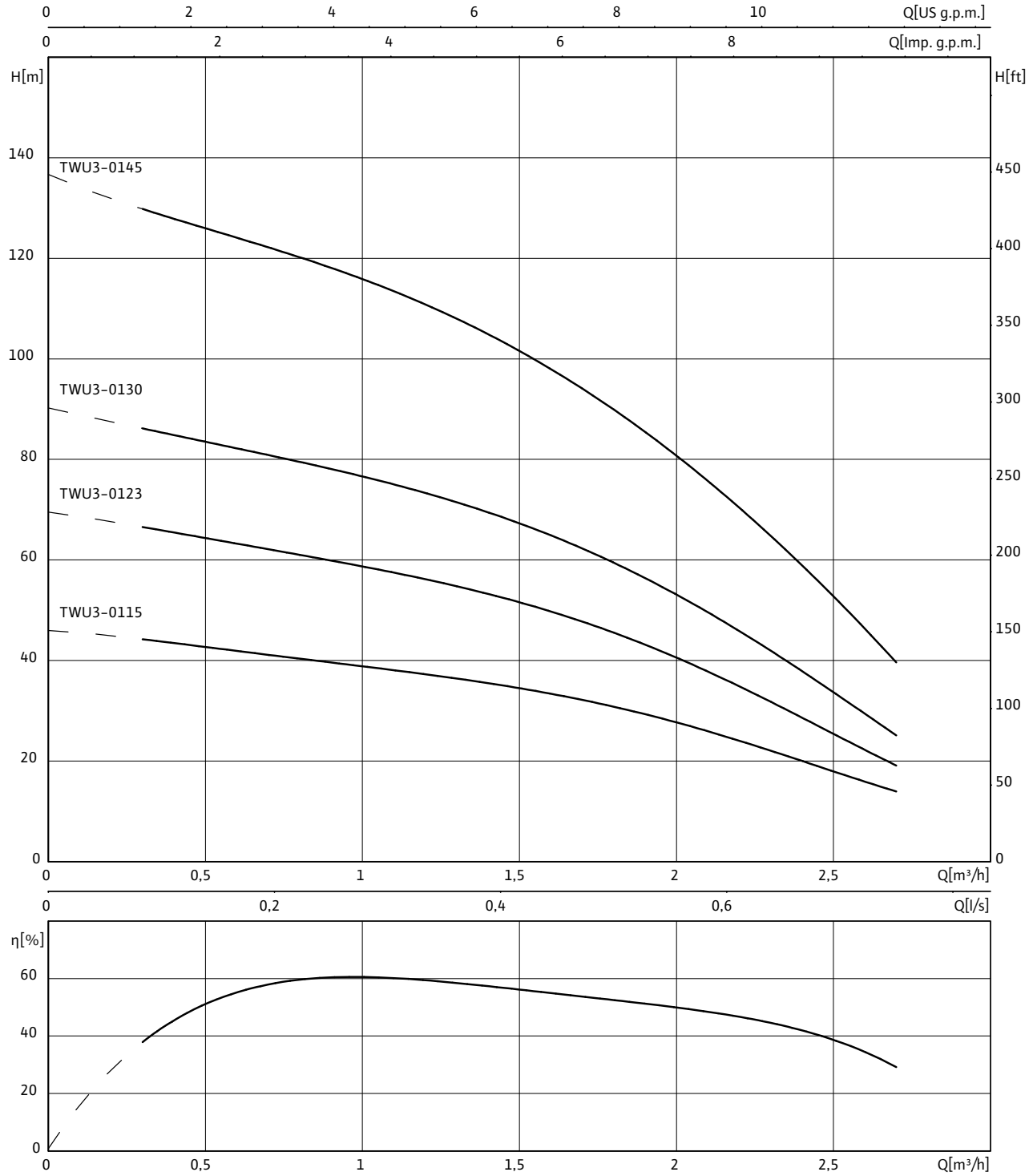

1~230 V or 3~400 V, 50 Hz, p = 1 kg/dm^3, v = 1x10^{-6} m^2/s, ISO 9906 Annex A

Wilo-Sub TWU 3-01..

Motor data

Wilo-Sub...	Mains connection	Motor diameter	Nominal motor power	Nominal current	Length of connecting cable	Cable cross-section
		Ø	P_2	I_N		
		"	kW	A	m	mm^2
TWU 3-0115	1~230 V, 50 Hz	3	0.37	3.75	1.8	4x1.5
TWU 3-0115	3~400 V, 50 Hz	3	0.37	2	1.8	4x1.5
TWU 3-0123	1~230 V, 50 Hz	3	0.55	4.5	1.8	4x1.5
TWU 3-0123	3~400 V, 50 Hz	3	0.55	2.1	1.8	4x1.5
TWU 3-0130	1~230 V, 50 Hz	3	0.75	5.85	1.8	4x1.5
TWU 3-0130	3~400 V, 50 Hz	3	0.75	2.5	1.8	4x1.5
TWU 3-0145	3~400 V, 50 Hz	3	1.1	3.2	1.8	4x1.5

Information for order placements

Wilo-Sub...	Mains connection	🚚	Art no.	Art. no. for cooling jacket pipe	
				for vertical installation (B)	*for horizontal installation (D)*
TWU 3-0115	1~230 V, 50 Hz	L	4090889	4092485	4092485 + 4092486
TWU 3-0115	3~400 V, 50 Hz	L	4090892	4092485	4092485 + 4092486
TWU 3-0123	1~230 V, 50 Hz	L	4090890	4092485	4092485 + 4092486
TWU 3-0123	3~400 V, 50 Hz	L	4090893	4092485	4092485 + 4092486
TWU 3-0130	1~230 V, 50 Hz	L	4090891	4092485	4092485 + 4092486
TWU 3-0130	3~400 V, 50 Hz	L	4090894	4092485	4092485 + 4092486
TWU 3-0145	3~400 V, 50 Hz	L	4090895	4092485	4092485 + 4092486

Motor efficiency based on 400 V, 50 Hz

Wilo-Sub TWU 3-01..

Dimension drawing Wilo-Sub TWU 3

A: **B:** **D:**

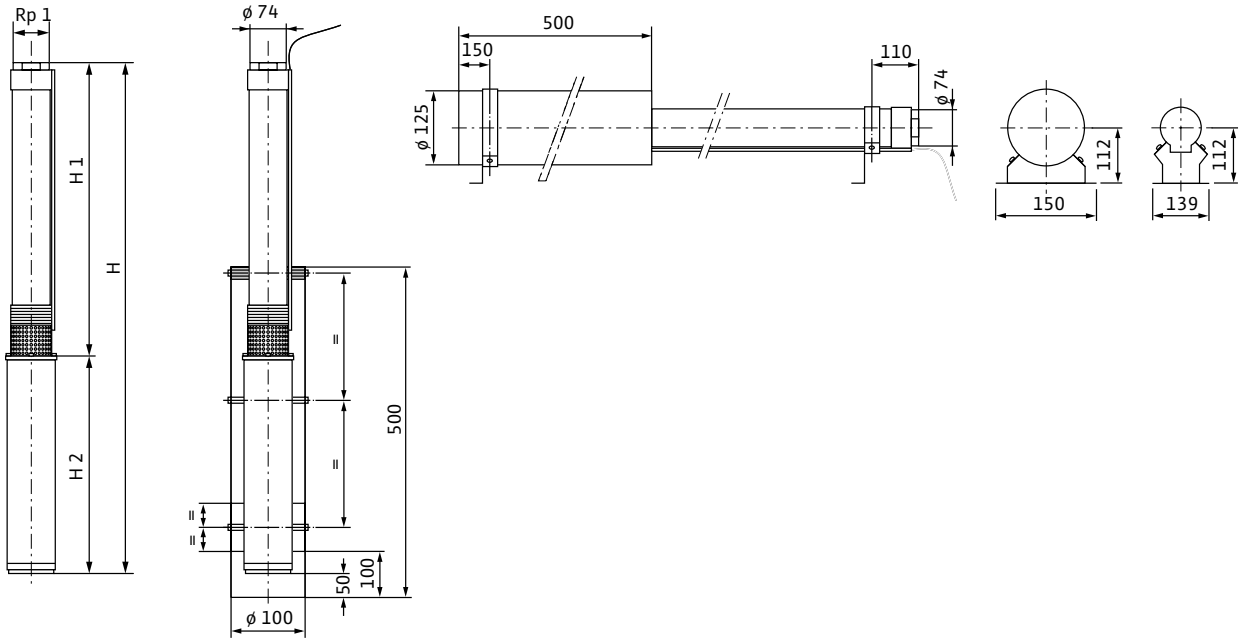

A = vertical, B = vertical with cooling jacket, D = horizontal with cooling jacket

Dimensions, weights							
Wilo-Sub...	**Mains connec-tion**	**Pressure connection**	**Dimensions**			**Installation**	**Weight of unit**
			H	*H1*	*H2*		*m*
			mm				kg
TWU 3-0115	1~230 V, 50 Hz	Rp 1	957	580	377	A, B, D	9.3
TWU 3-0115	3~400 V, 50 Hz	Rp 1	957	580	377	A, B, D	9.3
TWU 3-0123	1~230 V, 50 Hz	Rp 1	1177	780	397	A, B, D	10.8
TWU 3-0123	3~400 V, 50 Hz	Rp 1	1157	780	377	A, B, D	10.5
TWU 3-0130	1~230 V, 50 Hz	Rp 1	1416	1000	416	A, B, D	12.4
TWU 3-0130	3~400 V, 50 Hz	Rp 1	1397	1000	397	A, B, D	12
TWU 3-0145	3~400 V, 50 Hz	Rp 1	1796	1380	416	A, B, D	14.4

Series description Wilo-Sub TWU 3 HS

Design
Submersible pump, multistage

Type key

e.g.	**Wilo sub TWU 3-0305-HS-E-CP**
TWU	Submersible pump
3	Diameter of the hydraulic unit in inches ["]
03	Nominal volume flow [m^3/h]
05	Number of hydraulic stages
HS	High-speed version
E	Frequency converter version E = external frequency converter I = external frequency converter
CP	Control function CP = constant pressure control without = fixed speed with up to 8400 rpm

Application
- For private water supply from boreholes, wells and rainwater storage tanks
- For domestic water supply, sprinkling and irrigation
- For pumping water without long-fibre and abrasive constituents

Special features/product advantages
- Expanded flow capacity by increased rotation speed (up to 8400 rpm)
- Rewindable motor
- Integrated non-return valve
- Parts that come in contact with fluids are corrosion-free
- Including frequency converter (HS-E...: external, installed in the piping; HS-I...: built into the motor)
- Vertical and horizontal installation possible

Technical data
Submersible pump:
- Supply voltage:
  HS-E...: 1~230 V, 50/60 Hz (connection to the AC mains supply by a frequency converter)
  HS-I...: 1~230 V, 50/60 Hz (direct connection to the AC mains supply)
- Immersed operating mode: S1
- Fluid temperature: 3-35 °C
- Minimum flow rate at motor: 0.08 m/s
- Max. sand content: 50 g/m^3
- Max. number of starts: 30 /h
- Max. immersion depth: 150 m
- Protection class: IP 58
- Pressure connection: Rp 1

Frequency converter for version "HS-E...":
- Mains connection: 1~230 V, 50/60 Hz
- Output: 3~230 V/max.140 Hz/max.2.2 kW
- Fluid temperature: 3-50 °C
- Max. pressure: 8 bar
- Protection class: IP X5
- Connection: G 1¼

Equipment/function
- Multistage submersible-motor pump with radial impellers
- Integrated non-return valve
- Including frequency converter (HS-E...: external, HS-I...: built-in)
- Thermal motor protection built into the frequency converter

Materials
- Hydraulic housing: Stainless steel 1.4301
- Impellers: Polycarbonate
- Hydraulics shaft: 1.4104 stainless steel
- Motor housing: Stainless steel 1.4301
- Motor shaft: 1.4305 stainless steel

Description/design
Submersible pump for vertical or horizontal installation.

Hydraulics
Multistage submersible pump with radial impellers with sectional construction. Integrated non-return valve. All parts in contact with the fluid are made of corrosion-free materials.

Motor
Corrosion-free asynchronous motor for connection to the frequency converter supplied (HS-E...) or for direct connection to the mains power supply (HS-I...). Rewindable oil-filled motor with self-lubricating bearings, designed for high speeds up to 8400 rpm.

Frequency converter
External frequency converter or frequency converter integrated within the motor, for operation of the pump at speeds up to 8400 rpm, including the following functions:
- Soft starter

Series description Wilo-Sub TWU 3 HS

- Undervoltage, overvoltage and short-circuit protection
- Thermal overload protection of the motor and the frequency converter

The version "HS-E..." with external frequency converter offers the following additional equipment features:
- Control function "CP": Constant pressure
- Avoidance of frequent switching (cycling) by leakage monitoring
- Dry-running protection with automatic reset
- Change of direction of rotation
- Setting for max. flow and target pressure
- Pressure is shown on the display
- Settings, operating statuses and error messages are shown by LEDs or on the display.

The frequency converter always must be installed outside the fluid where it will be protected against overflows!

Control function "CP": Constant pressure
Operation with the frequency converter means the rotation speed of the unit is adapted to the current water requirements automatically. As a result, the submersible pump always delivers a constant pressure.

Cooling
The motor is cooled by the fluid. The motor must always be operated in submerged state. The limit values for the max. fluid temperature and the minimum flow rate must not be exceeded.
In cases of vertical installation, a cooling jacket must be provided depending on the diameter of the bore. In cases of horizontal installation, a cooling jacket must always be provided .

The external frequency converter is also cooled by the fluid. For this the frequency converter must be installed directly in the piping outside the fluid (overflow-proof).

Options
- Special cable lengths on request

Scope of delivery
- Hydraulics + motor ready assembled
- Frequency converter
- 1.75 m connecting cable approved for potable water (cross-section: 4x1.5 mm^2)
- Installation and operating instructions

Accessories
- Cooling jacket pipes
- Diaphragm pressure vessel
- Cable kits for potable and process water
- Float switch
- Switchgears
- Connection and installation material

Configuration
- No suction mode is possible with these units!
- The unit must be fully immersed in water during operation.
- An adapter of Rp 1 to G 1¼ in required for installation. This must be provided on site!

Pump curves

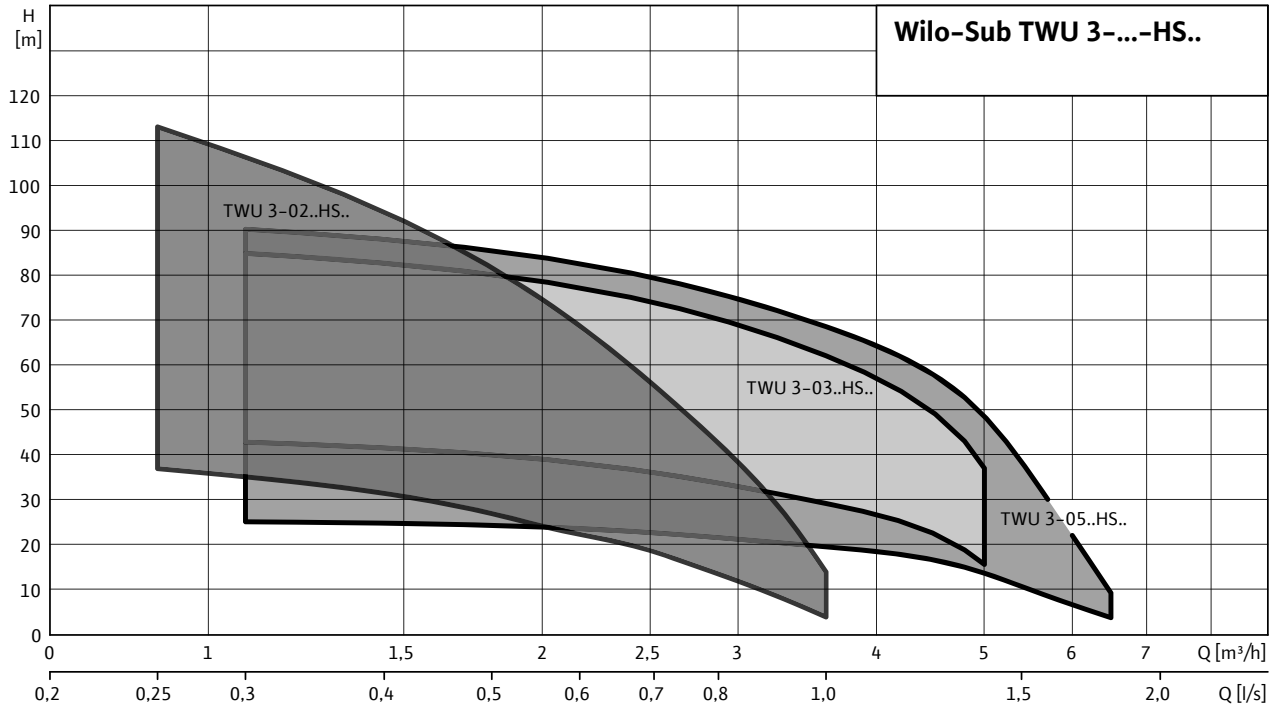

Wilo-Sub TWU 3-02...-HS

Pump curves Wilo-Sub TWU 3-02..-HS..

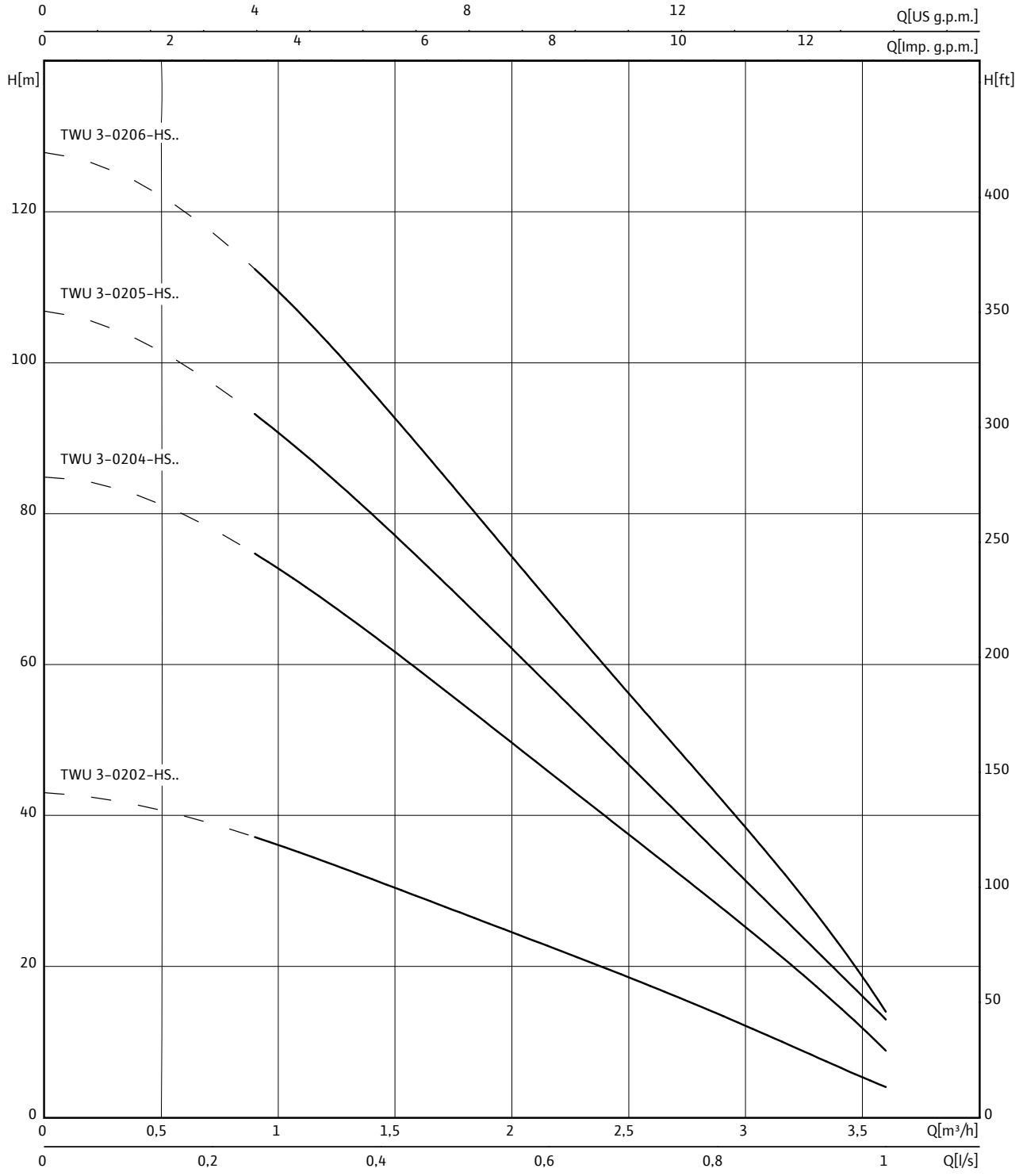

1~230 V, 50 Hz, p = 1 kg/dm^3, ν = 1x10^{-6} m^2/s, ISO 9906 Annex A, η = pump efficiency

Wilo-Sub TWU 3-02...-HS

Motor data for pumps with external frequency converter

Wilo-Sub...	Mains connection	Motor diameter	Nominal motor power	Nominal current	Length of connecting cable	Cable cross-section
		Ø	P_2	I_N		
		"	kW	A	m	mm^2
TWU 3-0202-HS-E-CP	1~230 V, 50/60 Hz	3	0.6	4	1.75	4x1.5
TWU 3-0204-HS-E-CP	1~230 V, 50/60 Hz	3	0.9	5.8	1.75	4x1.5
TWU 3-0205-HS-E-CP	1~230 V, 50/60 Hz	3	0.9	5.8	1.75	4x1.5
TWU 3-0206-HS-E-CP	1~230 V, 50/60 Hz	3	1.5	8.8	1.75	4x1.5
TWU 3-0202-HS-I	1~230 V, 50/60 Hz	3	0.6	9	1.75	4x1.5
TWU 3-0204-HS-I	1~230 V, 50/60 Hz	3	0.9	12	1.75	4x1.5
TWU 3-0205-HS-I	1~230 V, 50/60 Hz	3	0.9	12	1.75	4x1.5
TWU 3-0206-HS-I	1~230 V, 50/60 Hz	3	1.5	12.5	1.75	4x1.5

Ordering information for pumps with external frequency converter

Wilo-Sub...	Mains connection		Art no.	Art. no. for cooling jacket pipe	
				for vertical installation (B)	*for horizontal installation (D)*
TWU 3-0202-HS-E-CP	1~230 V, 50/60 Hz	L	6064266	1)	1)
TWU 3-0204-HS-E-CP	1~230 V, 50/60 Hz	L	6064267	1)	1)
TWU 3-0205-HS-E-CP	1~230 V, 50/60 Hz	L	6064268	1)	1)
TWU 3-0206-HS-E-CP	1~230 V, 50/60 Hz	L	6064269	1)	1)
TWU 3-0202-HS-I	1~230 V, 50/60 Hz	L	6064276	1)	1)
TWU 3-0204-HS-I	1~230 V, 50/60 Hz	L	6064277	1)	1)
TWU 3-0205-HS-I	1~230 V, 50/60 Hz	L	6064278	1)	1)
TWU 3-0206-HS-I	1~230 V, 50/60 Hz	L	6064279	1)	1)

Wilo-Sub TWU 3-02...-HS

Dimension drawing

A: **B:** **D:**

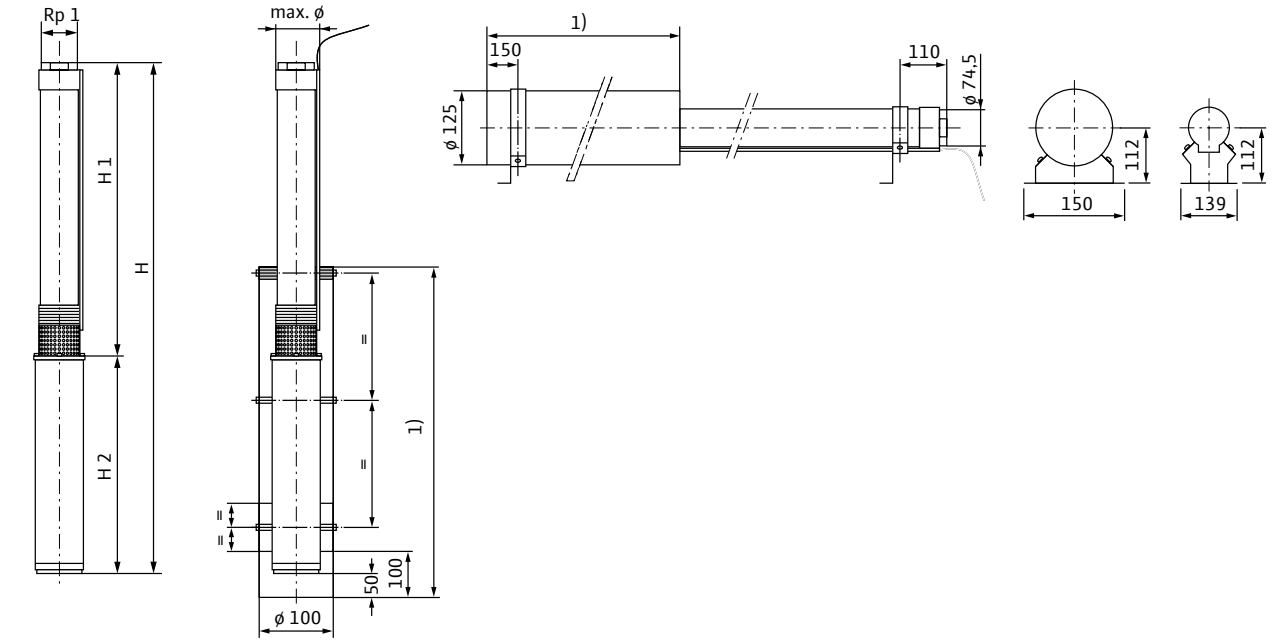

Dimensions, weights								
Wilo-Sub...	**Mains connection**	**Pressure connection**	**Dimensions**				**Installation**	**Weight of unit**
			ø [3]	*H*	*H1*	*H2*		*m*
			mm					kg
TWU 3-0202-HS-E-CP	1~230 V, 50/60 Hz	Rp 1	74.5	460	245	215	A, B, D	4.8
TWU 3-0204-HS-E-CP	1~230 V, 50/60 Hz	Rp 1	74.5	540	295	245	A, B, D	6.1
TWU 3-0205-HS-E-CP	1~230 V, 50/60 Hz	Rp 1	74.5	565	320	245	A, B, D	6.3
TWU 3-0206-HS-E-CP	1~230 V, 50/60 Hz	Rp 1	74.5	620	345	275	A, B, D	7.3
TWU 3-0202-HS-I	1~230 V, 50/60 Hz	Rp 1	80	1005	245	760	A, B, D	8.8
TWU 3-0204-HS-I	1~230 V, 50/60 Hz	Rp 1	80	1085	295	790	A, B, D	10
TWU 3-0205-HS-I	1~230 V, 50/60 Hz	Rp 1	80	1110	320	790	A, B, D	10.2
TWU 3-0206-HS-I	1~230 V, 50/60 Hz	Rp 1	80	1165	345	820	A, B, D	11.8

[3] Max. ø for power cable configuration in accordance with I_N

Wilo-Sub TWU 3-03...-HS

Pump curves Wilo-Sub TWU 3-03..-HS..

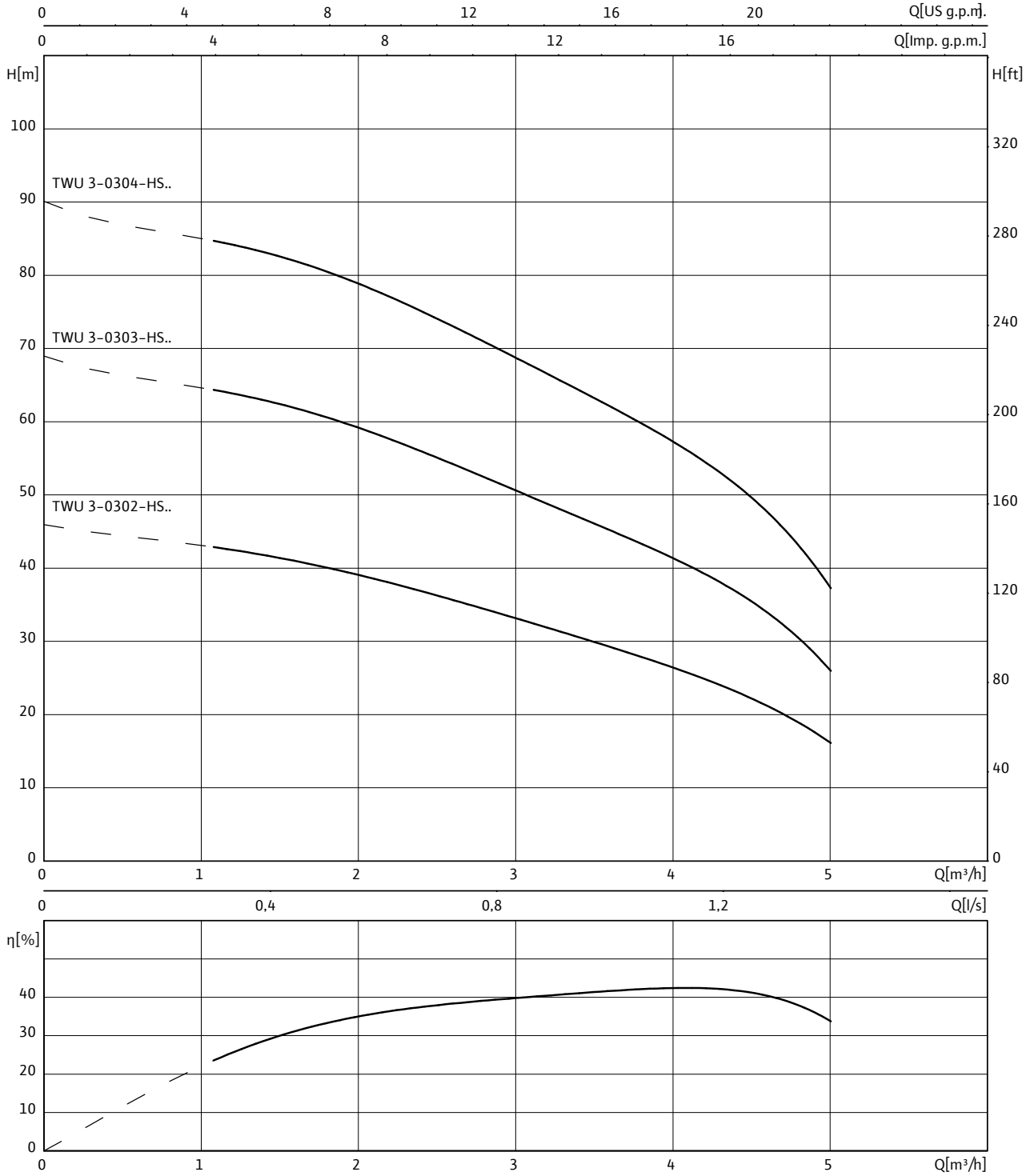

1~230 V, 50 Hz, p = 1 kg/dm^3, v = 1x10^{-6} m^2/s, ISO 9906 Annex A, η = pump efficiency

Wilo-Sub TWU 3-03...-HS

Motor data for pumps with external frequency converter

Wilo-Sub...	Mains connection	Motor diameter	Nominal motor power	Nominal current	Length of connecting cable	Cable cross-section
		Ø	P_2	I_N		
		"	kW	A	m	mm^2
TWU 3-0302-HS-E-CP	1~230 V, 50/60 Hz	3	0.6	4	1.75	4x1.5
TWU 3-0303-HS-E-CP	1~230 V, 50/60 Hz	3	0.9	5.8	1.75	4x1.5
TWU 3-0304-HS-E-CP	1~230 V, 50/60 Hz	3	1.5	8.8	1.75	4x1.5
TWU 3-0302-HS-I	1~230 V, 50/60 Hz	3	0.6	9	1.75	4x1.5
TWU 3-0303-HS-I	1~230 V, 50/60 Hz	3	0.9	12	1.75	4x1.5
TWU 3-0304-HS-I	1~230 V, 50/60 Hz	3	1.5	12.5	1.75	4x1.5

Ordering information for pumps with external frequency converter

Wilo-Sub...	Mains connection	🚚	Art no.	Art. no. for cooling jacket pipe	
				for vertical installation (B)	*for horizontal installation (D)*
TWU 3-0302-HS-E-CP	1~230 V, 50/60 Hz	L	6062862	1)	1)
TWU 3-0303-HS-E-CP	1~230 V, 50/60 Hz	L	6062863	1)	1)
TWU 3-0304-HS-E-CP	1~230 V, 50/60 Hz	L	6062864	1)	1)
TWU 3-0302-HS-I	1~230 V, 50/60 Hz	L	6064280	1)	1)
TWU 3-0303-HS-I	1~230 V, 50/60 Hz	L	6064281	1)	1)
TWU 3-0304-HS-I	1~230 V, 50/60 Hz	L	6064282	1)	1)

Wilo-Sub TWU 3-03...-HS

Dimension drawing

A: **B:** **D:**

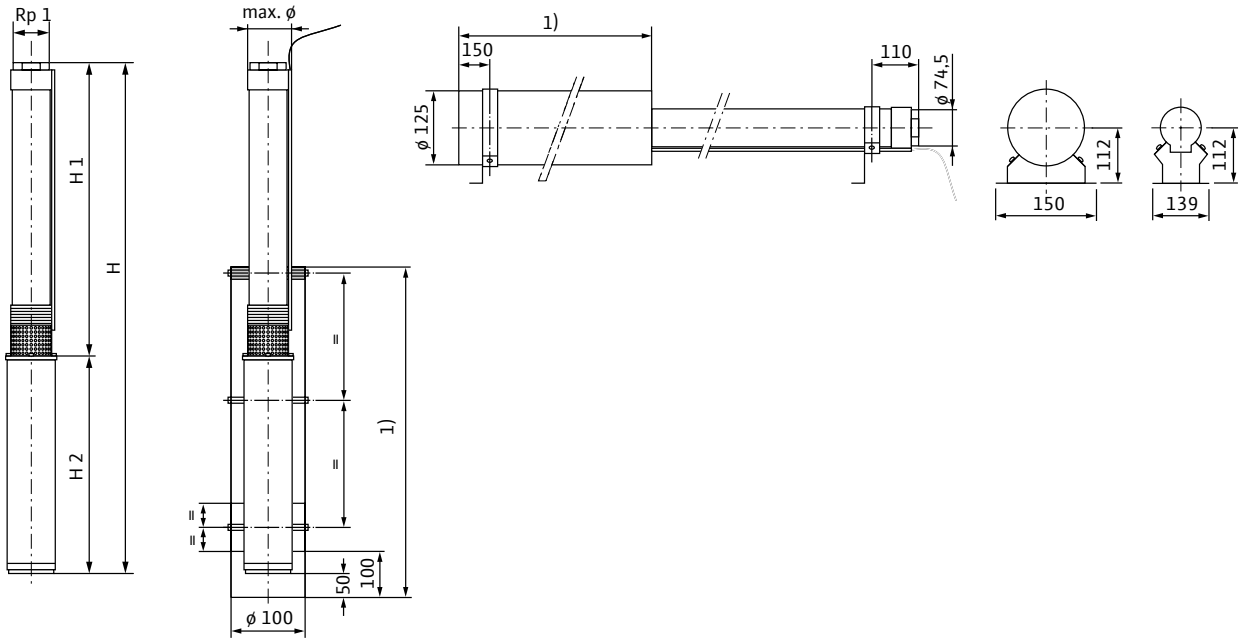

Dimensions, weights								
Wilo-Sub...	**Mains connection**	**Pressure connection**	**Dimensions**				**Installation**	**Weight of unit**
			ø [3]	*H*	*H1*	*H2*		*m*
			mm					kg
TWU 3-0302-HS-E-CP	1~230 V, 50/60 Hz	Rp 1	74.5	460	245	215	A, B, D	4.8
TWU 3-0303-HS-E-CP	1~230 V, 50/60 Hz	Rp 1	74.5	515	270	245	A, B, D	5.8
TWU 3-0304-HS-E-CP	1~230 V, 50/60 Hz	Rp 1	74.5	570	295	275	A, B, D	6.9
TWU 3-0302-HS-I	1~230 V, 50/60 Hz	Rp 1	80	1005	245	760	A, B, D	8.8
TWU 3-0303-HS-I	1~230 V, 50/60 Hz	Rp 1	80	1060	270	790	A, B, D	9.7
TWU 3-0304-HS-I	1~230 V, 50/60 Hz	Rp 1	80	1115	295	820	A, B, D	11.4

[3] Max. ø for power cable configuration in accordance with I_N

Wilo-Sub TWU 3-05...-HS

Pump curves Wilo-Sub TWU 3-05..-HS..

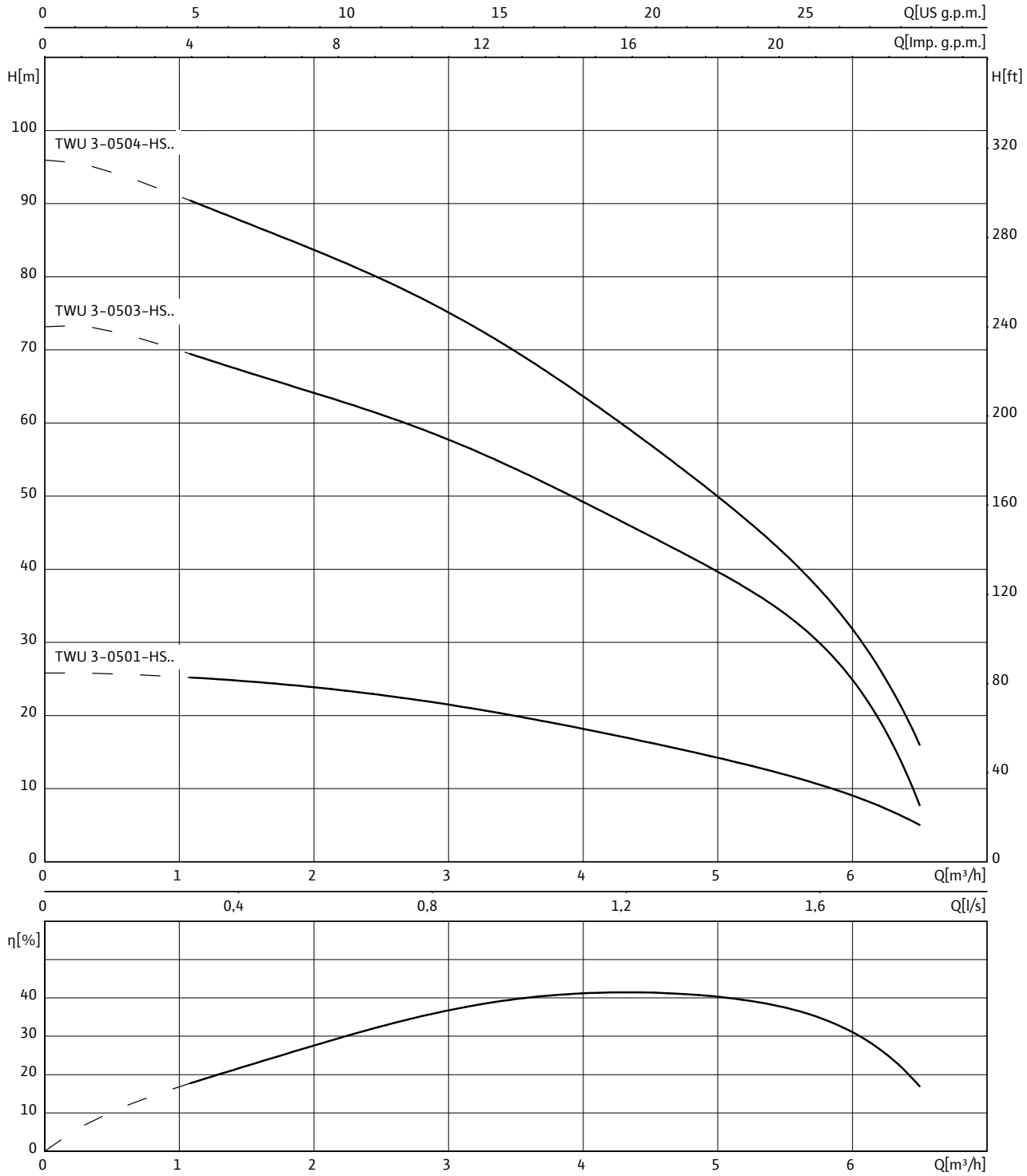

1~230 V, 50 Hz, p = 1 kg/dm^3, ν = 1x10^{-6} m^2/s, ISO 9906 Annex A, η = pump efficiency

Wilo-Sub TWU 3-05...-HS

Motor data for pumps with external frequency converter

Wilo-Sub...	Mains connection	Motor diameter	Nominal motor power	Nominal current	Length of connecting cable	Cable cross-section
		Ø	P_2	I_N		
		"	kW	A	m	mm^2
TWU 3-0501-HS-E-CP	1~230 V, 50/60 Hz	3	0.6	4	1.75	4x1.5
TWU 3-0503-HS-E-CP	1~230 V, 50/60 Hz	3	0.9	5.8	1.75	4x1.5
TWU 3-0504-HS-E-CP	1~230 V, 50/60 Hz	3	1.5	8.8	1.75	4x1.5
TWU 3-0501-HS-I	1~230 V, 50/60 Hz	3	0.6	9	1.75	4x1.5
TWU 3-0503-HS-I	1~230 V, 50/60 Hz	3	0.9	12	1.75	4x1.5
TWU 3-0504-HS-I	1~230 V, 50/60 Hz	3	1.5	12.5	1.75	4x1.5

Ordering information for pumps with external frequency converter

Wilo-Sub...	Mains connection	🚚	Art no.	Art. no. for cooling jacket pipe	
				for vertical installation (B)	*for horizontal installation (D)*
TWU 3-0501-HS-E-CP	1~230 V, 50/60 Hz	L	6062865	1)	1)
TWU 3-0503-HS-E-CP	1~230 V, 50/60 Hz	L	6062866	1)	1)
TWU 3-0504-HS-E-CP	1~230 V, 50/60 Hz	L	6062867	1)	1)
TWU 3-0501-HS-I	1~230 V, 50/60 Hz	L	6064283	1)	1)
TWU 3-0503-HS-I	1~230 V, 50/60 Hz	L	6064284	1)	1)
TWU 3-0504-HS-I	1~230 V, 50/60 Hz	L	6064285	1)	1)

Wilo-Sub TWU 3-05...-HS

Dimension drawing

A: **B:** **D:**

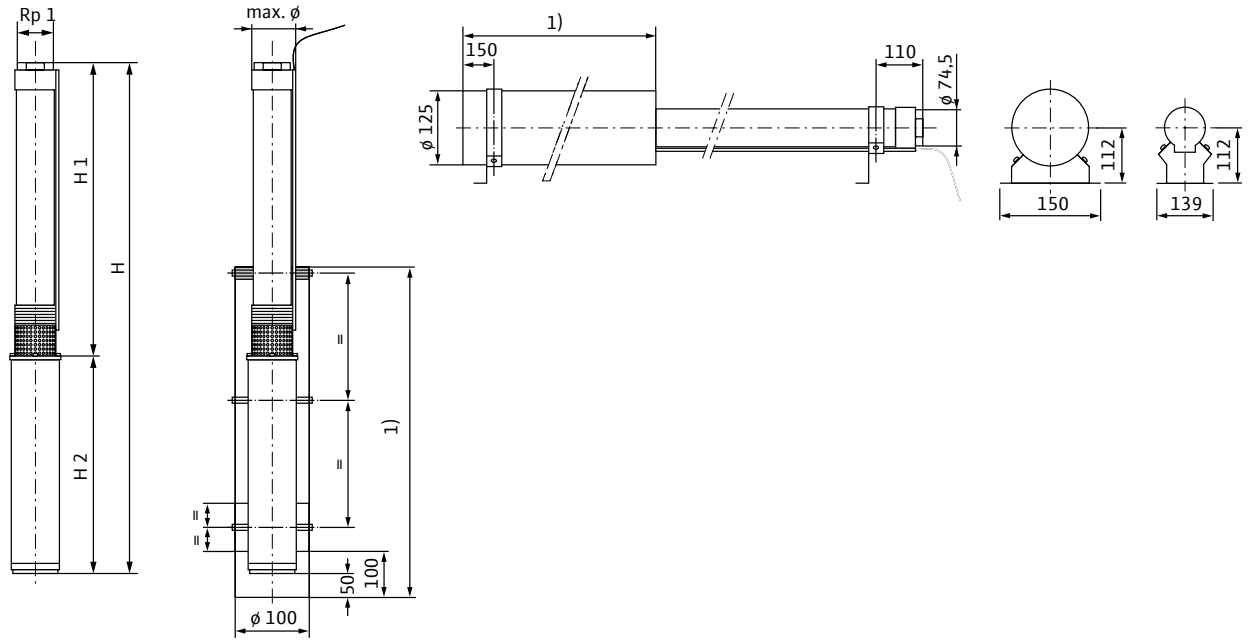

Dimensions, weights								
Wilo-Sub...	**Mains connection**	**Pressure connection**	**Dimensions**				**Installation**	**Weight of unit**
			ø [3]	*H*	*H1*	*H2*		*m*
			mm					kg
TWU 3-0501-HS-E-CP	1~230 V, 50/60 Hz	Rp 1	74.5	440	225	215	A, B, D	4.5
TWU 3-0503-HS-E-CP	1~230 V, 50/60 Hz	Rp 1	74.5	520	275	245	A, B, D	5.8
TWU 3-0504-HS-E-CP	1~230 V, 50/60 Hz	Rp 1	74.5	575	300	275	A, B, D	6.9
TWU 3-0501-HS-I	1~230 V, 50/60 Hz	Rp 1	80	985	225	760	A, B, D	8.5
TWU 3-0503-HS-I	1~230 V, 50/60 Hz	Rp 1	80	1065	275	790	A, B, D	9.7
TWU 3-0504-HS-I	1~230 V, 50/60 Hz	Rp 1	80	1120	300	820	A, B, D	11.4

[3] Max. ø for power cable configuration in accordance with I_N

Series description Wilo-Sub TWU 4

ErP READY — APPLIES TO EUROPEAN DIRECTIVE FOR ENERGY RELATED PRODUCTS

Design
Submersible pump, multistage

Type key

e.g.	**Wilo-Sub TWU 4-0203-C**
TWU	Submersible pump
4	Diameter of the hydraulic unit in inches ["]
02	Nominal volume flow [m^3/h]
03	Number of hydraulic stages
C	Series generation

Application
- For water supply from boreholes and rainwater storage tanks
- For domestic water supply, sprinkling and irrigation
- Pressure boosting
- Lowering the water level
- For pumping water without long-fibre and abrasive constituents

Special features/product advantages
- Parts in contact with fluid are corrosion-free
- Low-wearing due to floating impellers
- Integrated non-return valve
- Vertical and horizontal installation possible

Technical data
- Mains connection: 1~230 V, 50 Hz or 3~400 V, 50 Hz
- Immersed operating mode: S1
- Fluid temperature: 3-30 °C
- Minimum flow rate at motor: 0.08 m/s
- Max. sand content: 50 g/m^3
- Max. number of starts: 20/h
- Max. immersion depth: 200 m
- Protection class: IP 68
- Pressure connection: Rp 1¼ - Rp 2

Equipment/function
- Multistage submersible-motor pump with radial or semi-axial impellers
- Hermetically cast motors
- Integrated non-return valve
- NEMA coupling
- Single-phase or three-phase motor
- Integrated thermal motor protection for single-phase motor

Materials
- Hydraulic housing: Stainless steel 1.4301
- Impellers: Noryl
- Hydraulics shaft: 1.4104 stainless steel
- Motor housing: Stainless steel 1.4301
- Motor shaft: 1.4305 stainless steel

Description/design
Submersible-motor pump for vertical or horizontal installation.

Hydraulics
Multistage submersible-motor pump with radial or semi-axial impellers in sectional construction. Integrated non-return valve. All parts in contact with the fluid are made of corrosion-free materials.

Motor
Corrosion-free single-phase or three-phase motor for direct starting.Sealed and hermetically cast motor with enamel-insulated winding, resin-impregnated, self-lubricating bearing, with water-glycol filling.

Cooling
The motor is cooled by the fluid. The motor must always be operated in submerged state. The limit values for the max. fluid temperature and the minimum flow rate must not be exceeded. Vertical installation is possible optionally with or without cooling jacket. Cooling jacket is required for horizontal installation.

Options
- Motor versions for special voltages 3~230 V, 50 Hz; 3~500 V, 50 Hz; 1~230 V, 60 Hz; 3~230 V, 60 Hz; 3~380 V, 60 Hz; 3~460 V, 60 Hz

Scope of delivery
- Hydraulics + motor fully mounted
- 1.5/1.75/2.5 m connecting cable approved for potable water (cross-section: 4x1.5 mm^2)

Series description Wilo-Sub TWU 4

- Single-phase version including switchbox with capacitor, thermal motor protection and On/Off switch
- Installation and operating instructions

Accessories
- Cooling jacket pipes
- Diaphragm pressure vessel
- Cable kits for potable and process water
- Float switch
- Switchgears
- Connection and installation material

Configuration
- No suction mode is possible with these units!
- The unit must be fully immersed in water during operation.

General notes - ErP (ecological design-) directive
Minimum Efficiency Index (MEI) ≥ 0.1
- The benchmark for most efficient water pumps is MEI ≥ 0.70
- The efficiency of a pump with a trimmed impeller is usually lower than that of a pump with the full impeller diameter. The trimming of the impeller will adapt the pump to a fixed duty point, leading to reduced energy consumption. The minimum efficiency index (MEI) is based on the full impeller diameter.
- The operation of this water pump with variable duty points may be more efficient and economic when controlled, for example, by the use of a variable speed drive that matches the pump duty to the system.
- Information on benchmark efficiency is available at **www.europump.org/efficiencycharts**

Pump curves

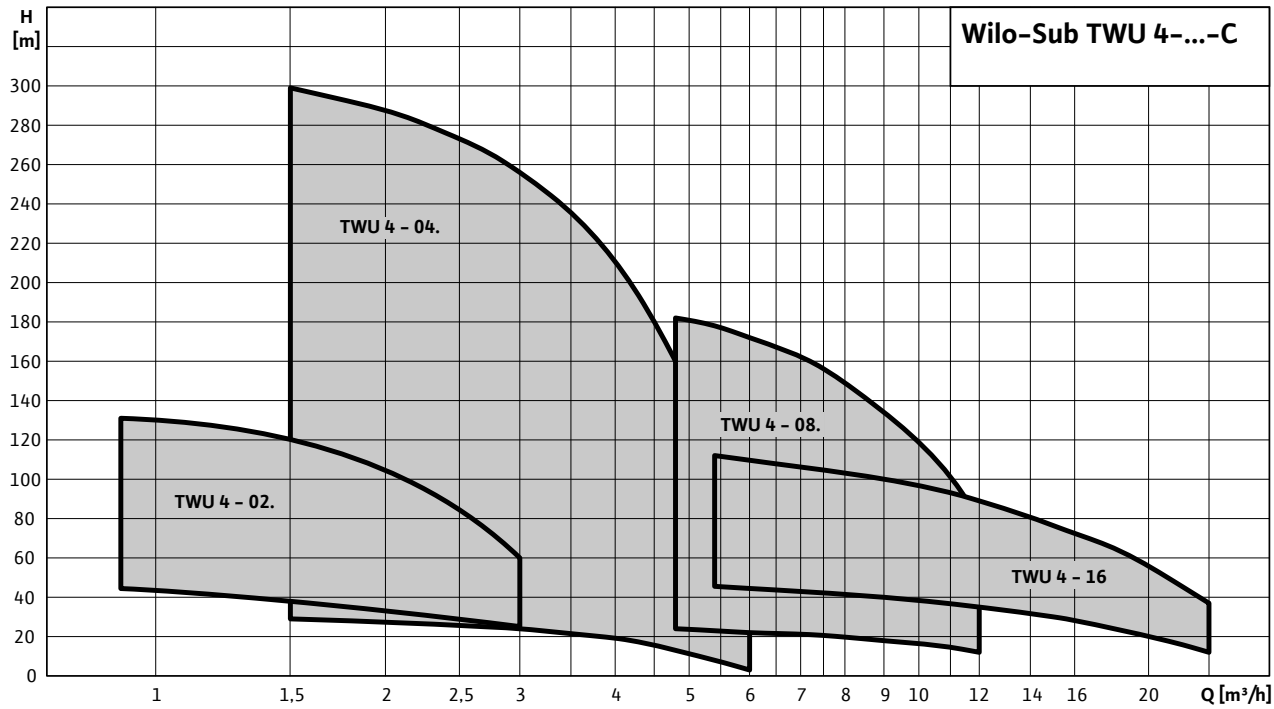

Wilo-Sub TWU 4-02..-C

Pump curves Wilo-Sub TWU 4-02..-C

Minimum Efficiency Index (MEI): ≥ 0.7

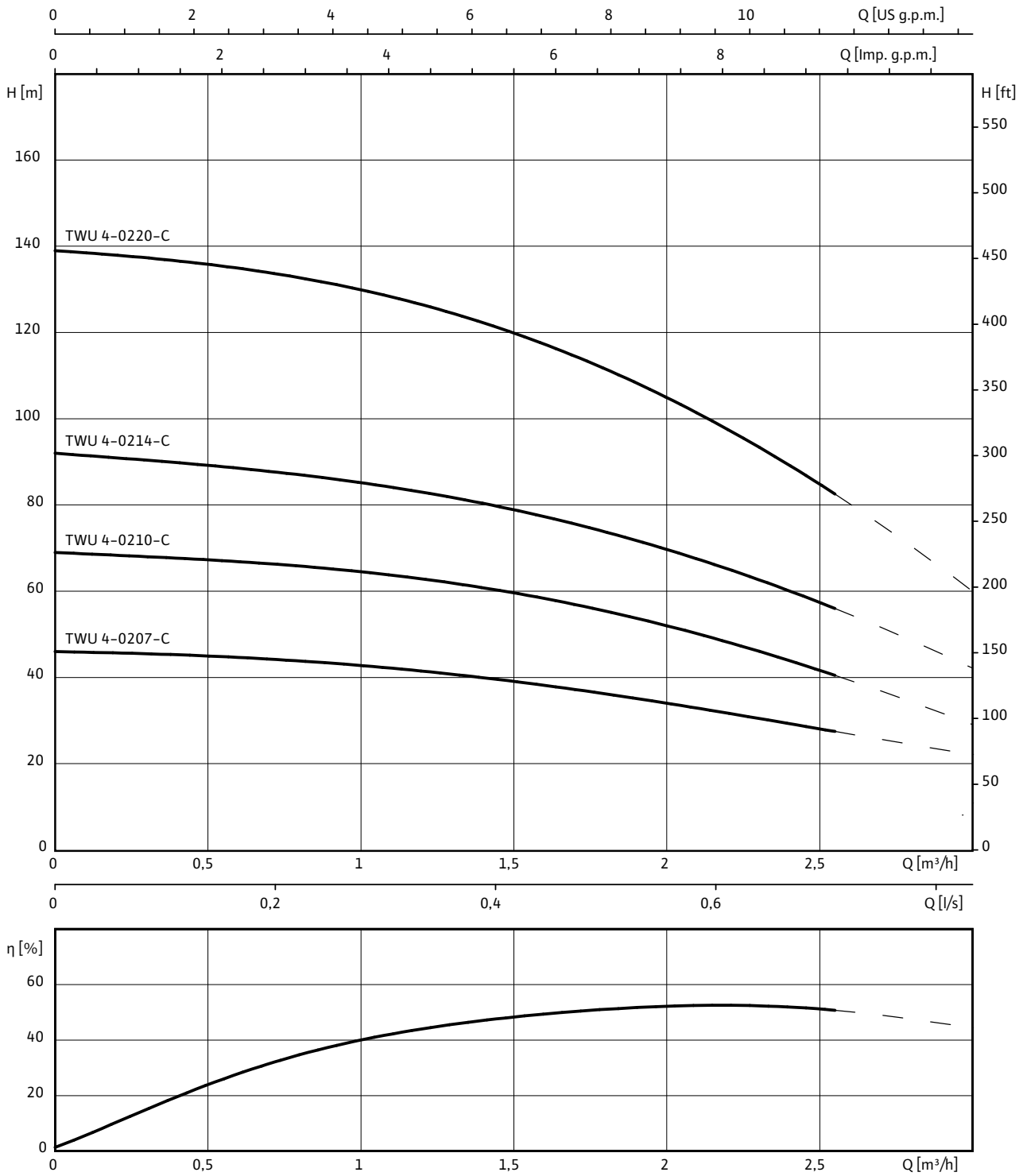

1~230 V or 3~400 V, 50 Hz, p = 1 kg/dm^3, v = 1x10^{-6} m^2/s, ISO 9906 Annex A, η = pump efficiency

Wilo-Sub TWU 4-02..-C

Motor data

Wilo-Sub...	Mains connection	Motor diameter	Nominal motor power	Nominal current	Length of connecting cable	Cable cross-section
		Ø	P_2	I_N		
		"	kW	A	m	mm^2
TWU 4-0207-C	3~400 V, 50 Hz	4	0.37	1.2	2.5	4x1.5
TWU 4-0207-C	1~230 V, 50 Hz	4	0.37	3.4	2.5	4x1.5
TWU 4-0210-C	3~400 V, 50 Hz	4	0.55	1.7	2.5	4x1.5
TWU 4-0210-C	1~230 V, 50 Hz	4	0.55	4.4	2.5	4x1.5
TWU 4-0214-C	3~400 V, 50 Hz	4	0.75	2.2	2.5	4x1.5
TWU 4-0214-C	1~230 V, 50 Hz	4	0.75	5.9	2.5	4x1.5
TWU 4-0220-C	3~400 V, 50 Hz	4	1.1	3	2.5	4x1.5
TWU 4-0220-C	1~230 V, 50 Hz	4	1.1	7.8	2.5	4x1.5

Information for order placements

Wilo-Sub...	Mains connection	🚚	Art no.	Art. no. for cooling jacket pipe	
				for vertical installation (B)	*for horizontal installation (D)*
TWU 4-0207-C	3~400 V, 50 Hz	L	6046688	4064430	6037935
TWU 4-0207-C	1~230 V, 50 Hz	L	6046661	4064430	6037935
TWU 4-0210-C	3~400 V, 50 Hz	L	6046687	4064430	6037935
TWU 4-0210-C	1~230 V, 50 Hz	L	6046690	4064430	6037935
TWU 4-0214-C	3~400 V, 50 Hz	L	6046686	4064430	6037935
TWU 4-0214-C	1~230 V, 50 Hz	L	6046689	4064430	6037935
TWU 4-0220-C	3~400 V, 50 Hz	L	6049347	4064430	6037935
TWU 4-0220-C	1~230 V, 50 Hz	L	6049336	4064430	6037935

Motor efficiency based on 400 V, 50 Hz

Wilo-Sub TWU 4-02..-C

Dimension drawing Wilo-Sub TWU 4

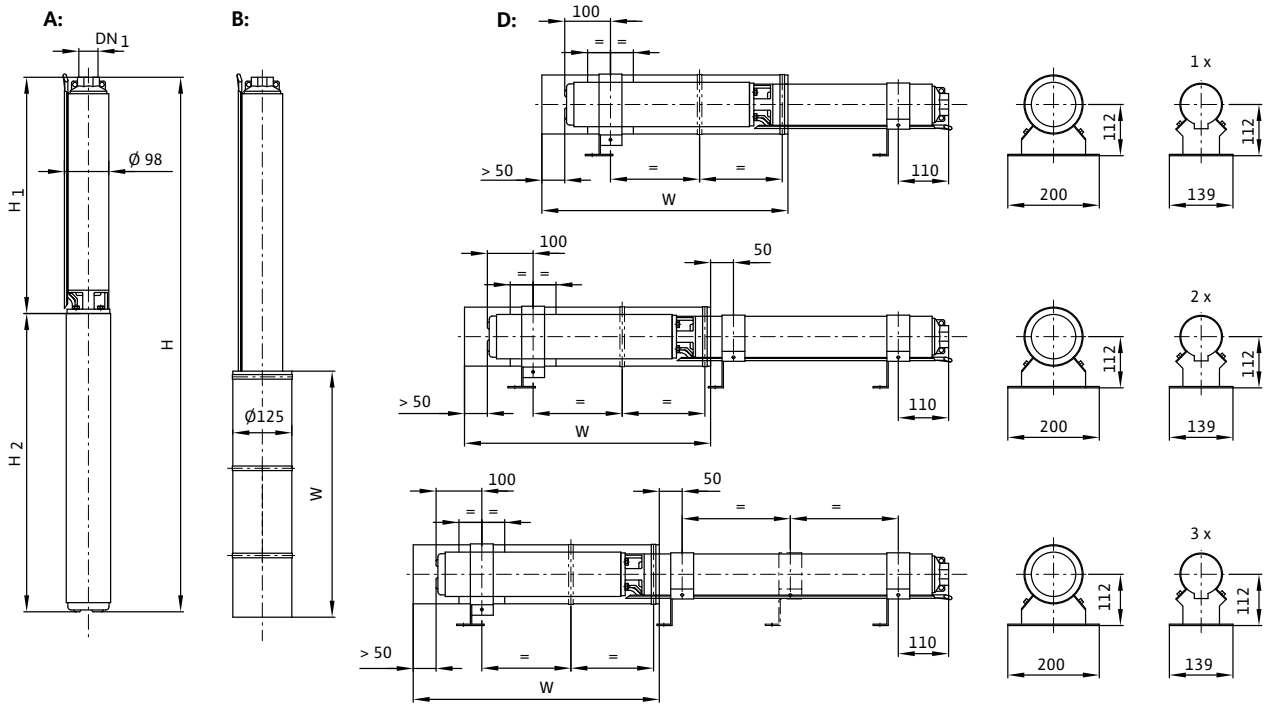

A = vertical, B = vertical with cooling jacket, D = horizontal with cooling jacket

Dimensions, weights

Wilo-Sub...	Mains connection	Pressure connection	Dimensions				Installation	Weight of unit
			H	*H1*	*H2*	*W*		*m*
			mm					kg
TWU 4-0207-C	3~400 V, 50 Hz	Rp 1¼	506	271	235	500	A, B, D	8.6
TWU 4-0207-C	1~230 V, 50 Hz	Rp 1¼	521	271	250	500	A, B, D	9.6
TWU 4-0210-C	3~400 V, 50 Hz	Rp 1¼	574	324	250	500	A, B, D	10.3
TWU 4-0210-C	1~230 V, 50 Hz	Rp 1¼	589	324	265	500	A, B, D	11.4
TWU 4-0214-C	3~400 V, 50 Hz	Rp 1¼	659	394	265	500	A, B, D	12.2
TWU 4-0214-C	1~230 V, 50 Hz	Rp 1¼	689	394	295	500	A, B, D	12.2
TWU 4-0220-C	3~400 V, 50 Hz	Rp 1¼	794	499	295	500	A, B, D	15.8
TWU 4-0220-C	1~230 V, 50 Hz	Rp 1¼	839	499	340	500	A, B, D	16.1

Wilo-Sub TWU 4-04..-C

Pump curves Wilo-Sub TWU 4-04..-C

Minimum Efficiency Index (MEI): ≥ 0.7

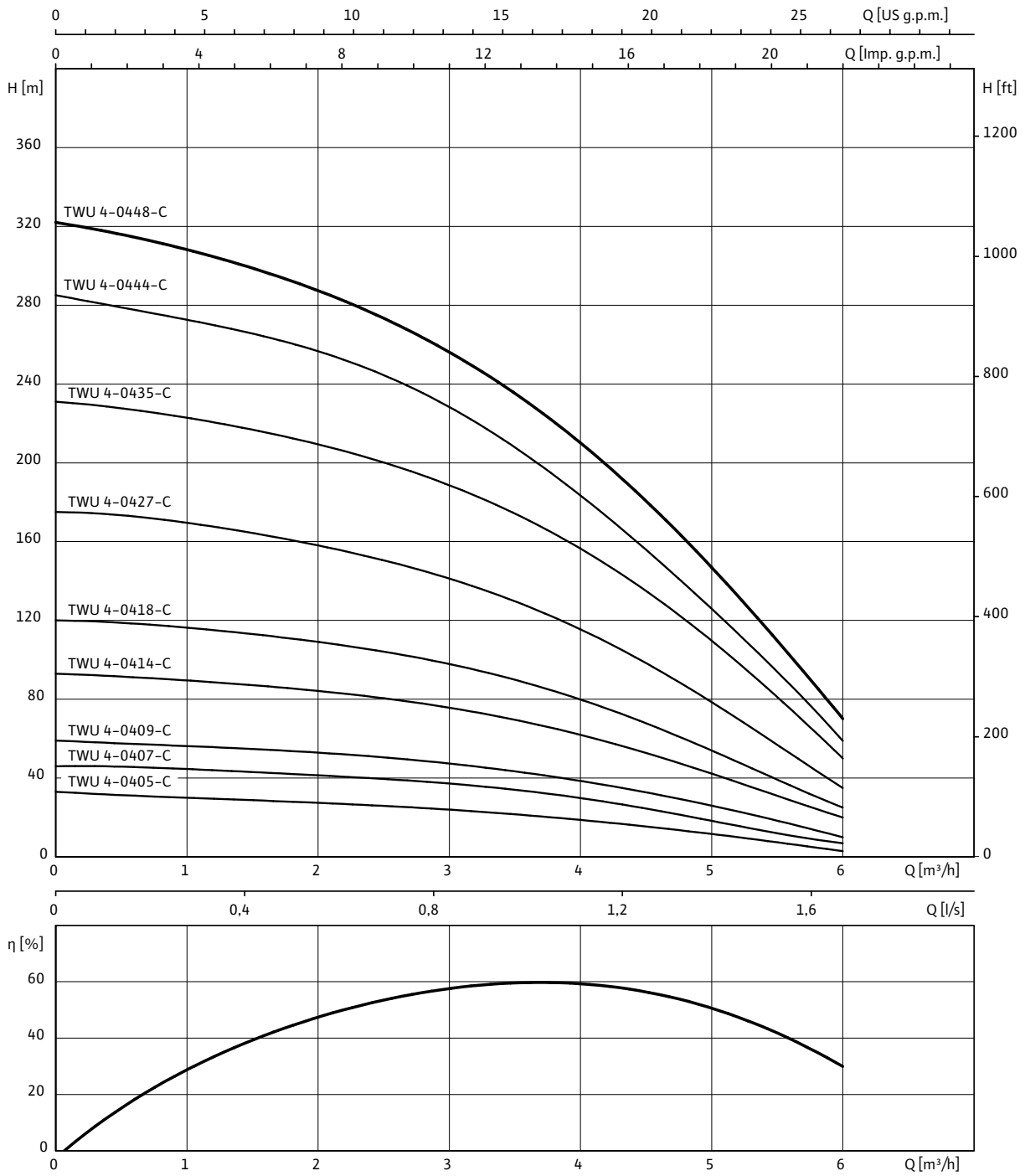

1~230 V or 3~400 V, 50 Hz, p = 1 kg/dm^3, v = 1x10^{-6} m^2/s, ISO 9906 Annex A, η = pump efficiency

Wilo-Sub TWU 4-04..-C

Motor data

Wilo-Sub...	Mains connection	Motor diameter	Nominal motor power	Nominal current	Length of connecting cable	Cable cross-section
		Ø	P_2	I_N		
		"	kW	A	m	mm^2
TWU 4-0405-C	1~230 V, 50 Hz	4	0.37	3.4	2.5	4x1.5
TWU 4-0405-C	3~400 V, 50 Hz	4	0.37	1.2	2.5	4x1.5
TWU 4-0407-C	1~230 V, 50 Hz	4	0.55	4.4	2.5	4x1.5
TWU 4-0407-C	3~400 V, 50 Hz	4	0.55	1.7	2.5	4x1.5
TWU 4-0409-C	1~230 V, 50 Hz	4	0.75	5.9	2.5	4x1.5
TWU 4-0409-C	3~400 V, 50 Hz	4	0.75	2.2	2.5	4x1.5
TWU 4-0414-C	1~230 V, 50 Hz	4	1.1	7.8	2.5	4x1.5
TWU 4-0414-C	3~400 V, 50 Hz	4	1.1	3	2.5	4x1.5
TWU 4-0418-C	1~230 V, 50 Hz	4	1.5	10.2	2.5	4x1.5
TWU 4-0418-C	3~400 V, 50 Hz	4	1.5	4	2.5	4x1.5
TWU 4-0427-C	1~230 V, 50 Hz	4	2.2	15	2.5	4x1.5
TWU 4-0427-C	3~400 V, 50 Hz	4	2.2	5.6	2.5	4x1.5
TWU 4-0435-C	3~400 V, 50 Hz	4	3	7.5	2.5	4x1.5
TWU 4-0444-C	3~400 V, 50 Hz	4	4	10.1	2.5	4x1.5
TWU 4-0448-C	3~400 V, 50 Hz	4	4	10.1	2.5	4x1.5

Information for order placements

Wilo-Sub...	Mains connection	🚚	Art no.	Art. no. for cooling jacket pipe	
				for vertical installation (B)	*for horizontal installation (D)*
TWU 4-0405-C	1~230 V, 50 Hz	L	6049337	4064430	6037935
TWU 4-0405-C	3~400 V, 50 Hz	L	6049348	4064430	6037935
TWU 4-0407-C	1~230 V, 50 Hz	L	6049338	4064430	6037935
TWU 4-0407-C	3~400 V, 50 Hz	L	6049349	4064430	6037935
TWU 4-0409-C	1~230 V, 50 Hz	L	6049339	4064430	6037935
TWU 4-0409-C	3~400 V, 50 Hz	L	6049350	4064430	6037935
TWU 4-0414-C	1~230 V, 50 Hz	L	6049340	4064430	6037935
TWU 4-0414-C	3~400 V, 50 Hz	L	6049351	4064430	6037935
TWU 4-0418-C	1~230 V, 50 Hz	L	6049341	4064430	6037935
TWU 4-0418-C	3~400 V, 50 Hz	L	6049352	4064430	6037935
TWU 4-0427-C	1~230 V, 50 Hz	L	6049342	4064430	6037935
TWU 4-0427-C	3~400 V, 50 Hz	L	6049353	4064430	6037935
TWU 4-0435-C	3~400 V, 50 Hz	L	6049354	4064431	6038901
TWU 4-0444-C	3~400 V, 50 Hz	L	6049355	4064431	6038901
TWU 4-0448-C	3~400 V, 50 Hz	L	6049356	4064431	6038901

Motor efficiency based on 400 V, 50 Hz

Wilo-Sub TWU 4-04..-C

Dimension drawing Wilo-Sub TWU 4

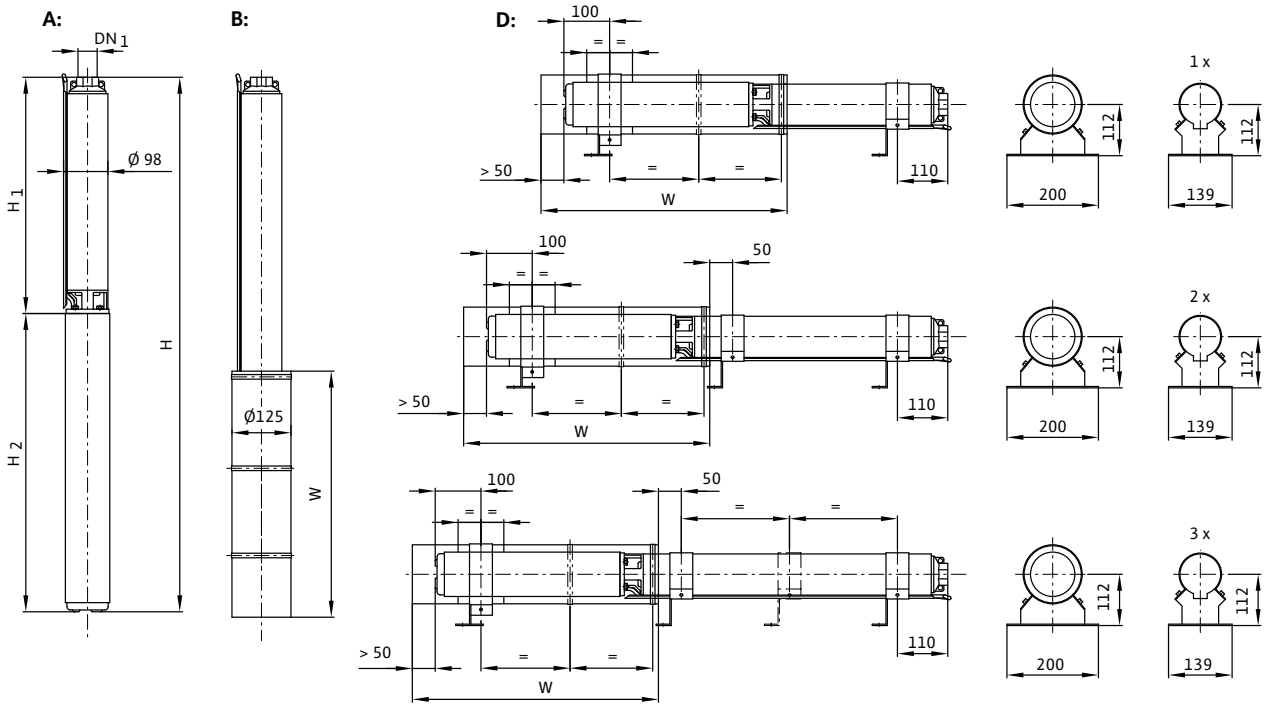

A = vertical, B = vertical with cooling jacket, D = horizontal with cooling jacket

Dimensions, weights

Wilo-Sub...	Mains connection	Pressure connection	Dimensions				Installation	Weight of unit
			H	*H1*	*H2*	*W*		*m*
			mm					kg
TWU 4-0405-C	1~230 V, 50 Hz	Rp 1¼	507	257	250	500	A, B, D	9.5
TWU 4-0405-C	3~400 V, 50 Hz	Rp 1¼	492	257	235	500	A, B, D	8.5
TWU 4-0407-C	1~230 V, 50 Hz	Rp 1¼	566	301	265	500	A, B, D	11.1
TWU 4-0407-C	3~400 V, 50 Hz	Rp 1¼	551	301	250	500	A, B, D	10
TWU 4-0409-C	1~230 V, 50 Hz	Rp 1¼	639	344	295	500	A, B, D	13.9
TWU 4-0409-C	3~400 V, 50 Hz	Rp 1¼	609	344	265	500	A, B, D	11.6
TWU 4-0414-C	1~230 V, 50 Hz	Rp 1¼	792	452	340	500	A, B, D	15.3
TWU 4-0414-C	3~400 V, 50 Hz	Rp 1¼	747	452	295	500	A, B, D	15
TWU 4-0418-C	1~230 V, 50 Hz	Rp 1¼	913	538	375	500	A, B, D	18.7
TWU 4-0418-C	3~400 V, 50 Hz	Rp 1¼	878	538	340	500	A, B, D	16.1
TWU 4-0427-C	1~230 V, 50 Hz	Rp 1¼	1197	767	430	500	A, B, D	22.6
TWU 4-0427-C	3~400 V, 50 Hz	Rp 1¼	1142	767	375	500	A, B, D	20.4
TWU 4-0435-C	3~400 V, 50 Hz	Rp 1¼	1414	934	480	750	A, B, D	26.2
TWU 4-0444-C	3~400 V, 50 Hz	Rp 1¼	1683	1128	555	750	A, B, D	32.7
TWU 4-0448-C	3~400 V, 50 Hz	Rp 1¼	1808	1253	555	750	A, B, D	33.3

Wilo-Sub TWU 4-08..-C

Pump curves Wilo-Sub TWU 4-08..-C

Minimum Efficiency Index (MEI): ≥ 0.1

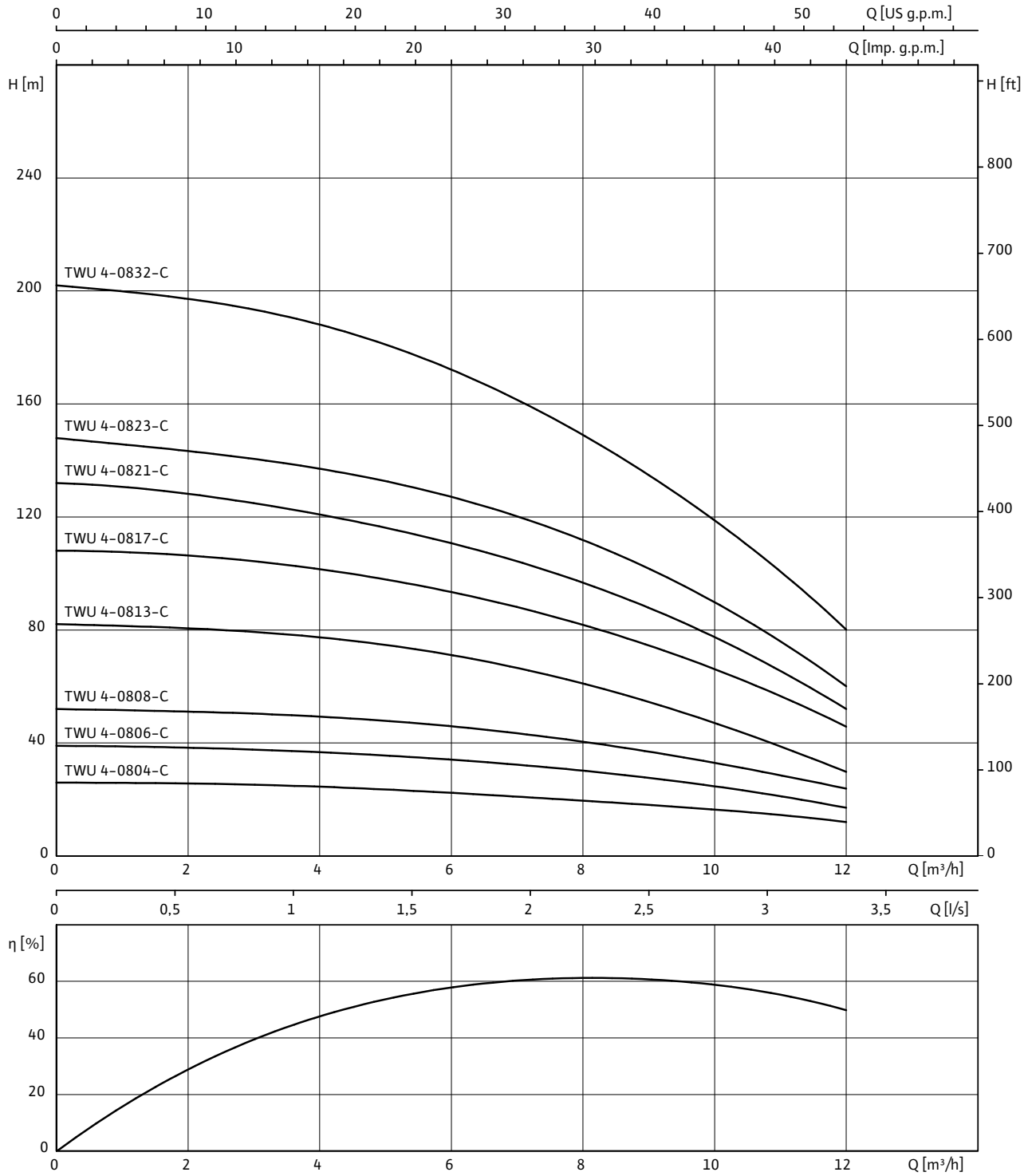

1~230 V or 3~400 V, 50 Hz, p = 1 kg/dm^3, v = 1x10^{-6} m^2/s, ISO 9906 Annex A, η = pump efficiency

Wilo-Sub TWU 4-08..-C

Motor data

Wilo-Sub...	Mains connection	Motor diameter	Nominal motor power	Nominal current	Length of connecting cable	Cable cross-section
		Ø	P_2	I_N		
		"	kW	A	m	mm^2
TWU 4-0804-C	1~230 V, 50 Hz	4	0.75	5.9	2.5	4x1.5
TWU 4-0804-C	3~400 V, 50 Hz	4	0.75	2.2	2.5	4x1.5
TWU 4-0806-C	1~230 V, 50 Hz	4	1.1	7.8	2.5	4x1.5
TWU 4-0806-C	3~400 V, 50 Hz	4	1.1	3	2.5	4x1.5
TWU 4-0808-C	1~230 V, 50 Hz	4	1.5	10.2	2.5	4x1.5
TWU 4-0808-C	3~400 V, 50 Hz	4	1.5	4	2.5	4x1.5
TWU 4-0813-C	1~230 V, 50 Hz	4	2.2	15	2.5	4x1.5
TWU 4-0813-C	3~400 V, 50 Hz	4	2.2	5.6	2.5	4x1.5
TWU 4-0817-C	3~400 V, 50 Hz	4	3	7.5	2.5	4x1.5
TWU 4-0821-C	3~400 V, 50 Hz	4	4	10.1	2.5	4x1.5
TWU 4-0823-C	3~400 V, 50 Hz	4	4	10.1	2.5	4x1.5
TWU 4-0832-C	3~400 V, 50 Hz	4	5.5	13.6	2.5	4x1.5

Information for order placements

Wilo-Sub...	Mains connection	🚚	Art no.	Art. no. for cooling jacket pipe	
				for vertical installation (B)	*for horizontal installation (D)*
TWU 4-0804-C	1~230 V, 50 Hz	L	6049343	4064430	6037935
TWU 4-0804-C	3~400 V, 50 Hz	L	6049357	4064430	6037935
TWU 4-0806-C	1~230 V, 50 Hz	L	6049344	4064430	6037935
TWU 4-0806-C	3~400 V, 50 Hz	L	6049358	4064430	6037935
TWU 4-0808-C	1~230 V, 50 Hz	L	6049345	4064430	6037935
TWU 4-0808-C	3~400 V, 50 Hz	L	6049359	4064430	6037935
TWU 4-0813-C	1~230 V, 50 Hz	L	6049346	4064430	6037935
TWU 4-0813-C	3~400 V, 50 Hz	L	6049360	4064430	6037935
TWU 4-0817-C	3~400 V, 50 Hz	L	6049361	4064431	6038901
TWU 4-0821-C	3~400 V, 50 Hz	L	6049362	4064431	6038901
TWU 4-0823-C	3~400 V, 50 Hz	L	6049363	4064431	6038901
TWU 4-0832-C	3~400 V, 50 Hz	L	6049364	4064431	6038901

Motor efficiency based on 400 V, 50 Hz

Wilo-Sub TWU 4-08..-C

Dimension drawing Wilo-Sub TWU 4

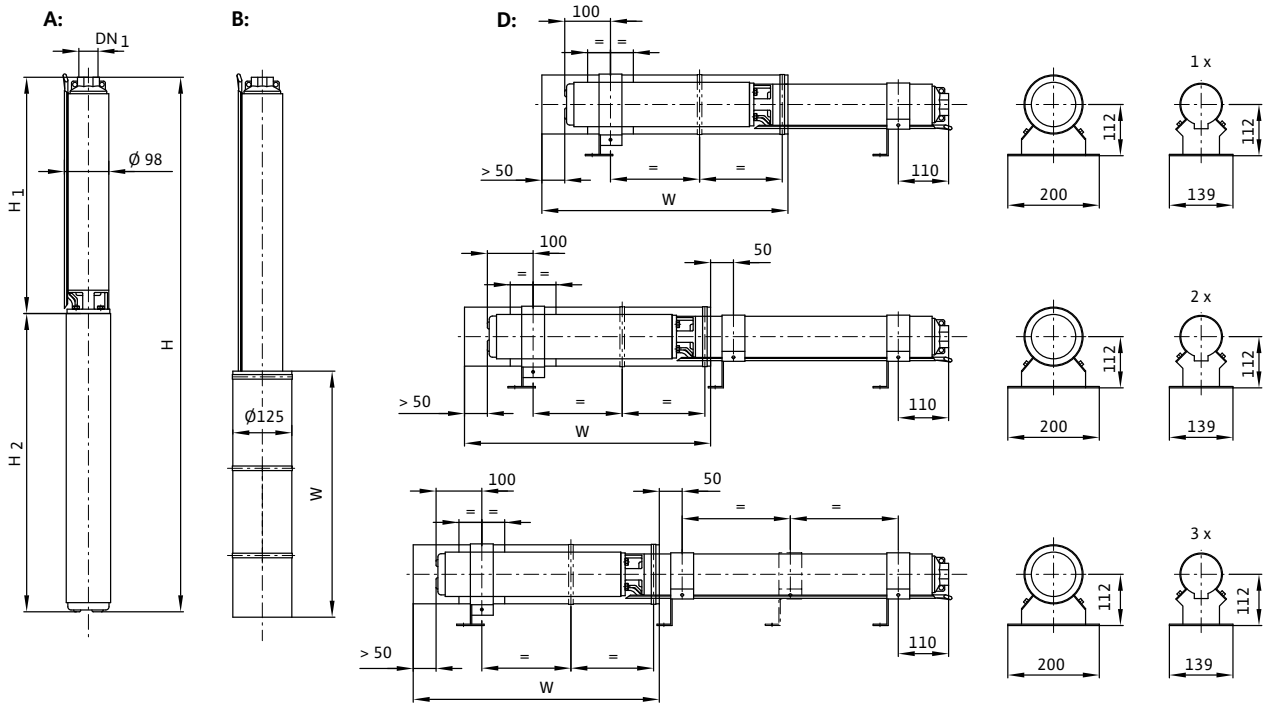

A = vertical, B = vertical with cooling jacket, D = horizontal with cooling jacket

Dimensions, weights

Wilo-Sub...	Mains connection	Pressure connection	Dimensions				Installation	Weight of unit
			H	*H1*	*H2*	*W*		*m*
			mm					kg
TWU 4-0804-C	1~230 V, 50 Hz	Rp 2	589	294	295	500	A, B, D	13.4
TWU 4-0804-C	3~400 V, 50 Hz	Rp 2	559	294	265	500	A, B, D	11.1
TWU 4-0806-C	1~230 V, 50 Hz	Rp 2	696	356	340	500	A, B, D	14.6
TWU 4-0806-C	3~400 V, 50 Hz	Rp 2	651	356	295	500	A, B, D	14.3
TWU 4-0808-C	1~230 V, 50 Hz	Rp 2	793	418	375	500	A, B, D	18
TWU 4-0808-C	3~400 V, 50 Hz	Rp 2	758	418	340	500	A, B, D	15.4
TWU 4-0813-C	1~230 V, 50 Hz	Rp 2	1003	573	430	500	A, B, D	21.9
TWU 4-0813-C	3~400 V, 50 Hz	Rp 2	948	573	375	500	A, B, D	19.7
TWU 4-0817-C	3~400 V, 50 Hz	Rp 2	1177	697	480	750	A, B, D	24.9
TWU 4-0821-C	3~400 V, 50 Hz	Rp 2	1414	859	555	750	A, B, D	31.2
TWU 4-0823-C	3~400 V, 50 Hz	Rp 2	1476	921	555	750	A, B, D	31.8
TWU 4-0832-C	3~400 V, 50 Hz	Rp 2	1913	1238	675	750	A, B, D	40.4

Wilo-Sub TWU 4-16..-C

Pump curves Wilo-Sub TWU 4-16..-C

Minimum Efficiency Index (MEI): ≥ 0.1

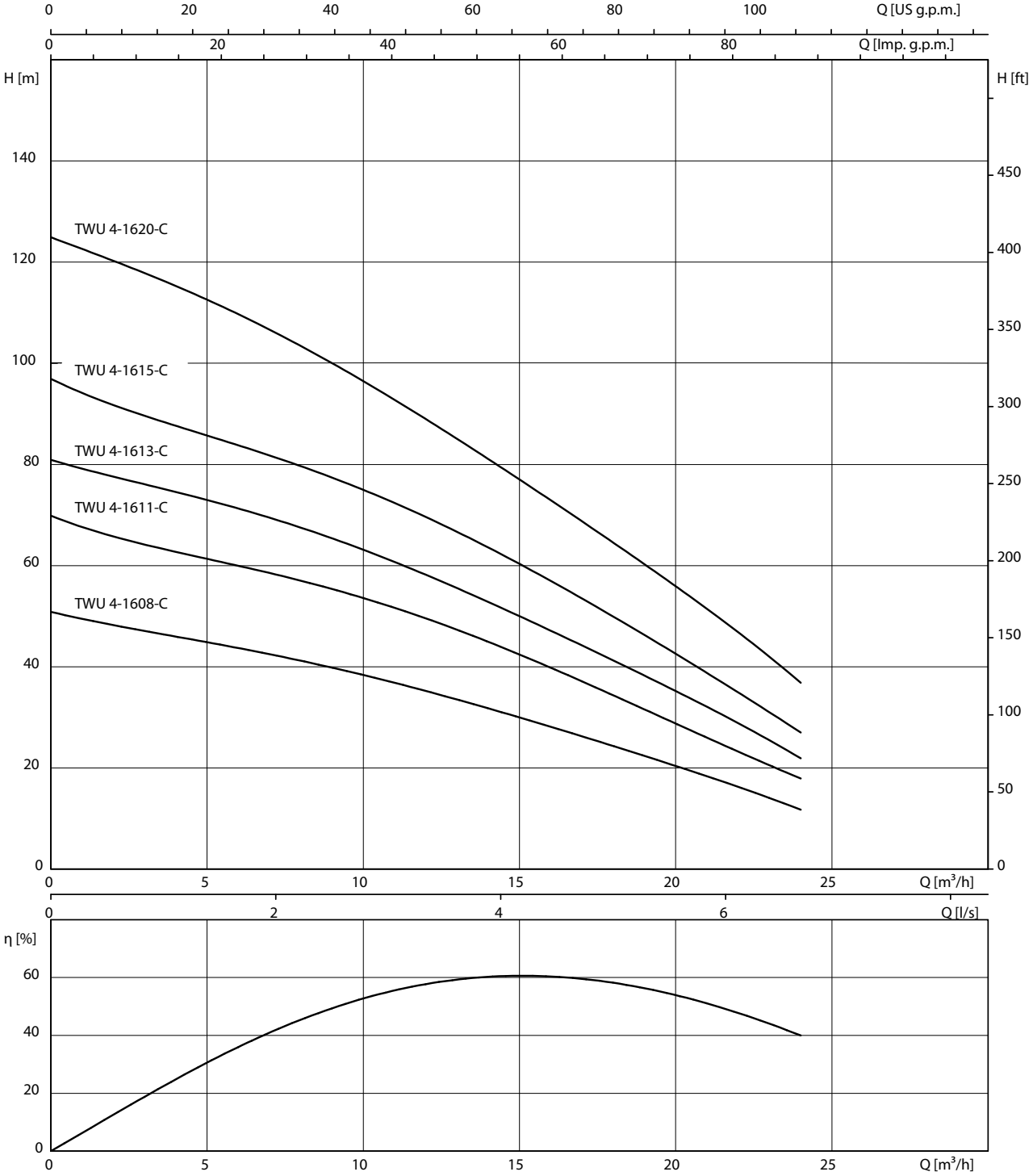

1~230 V or 3~400 V, 50 Hz, p = 1 kg/dm^3, v = 1x10^{-6} m^2/s, ISO 9906 Annex A, η = pump efficiency

Wilo-Sub TWU 4-16..-C

Motor data						
Wilo-Sub...	**Mains connection**	**Motor diameter**	**Nominal motor power**	**Nominal current**	**Length of connecting cable**	**Cable cross-section**
		Ø	P_2	I_N		
		"	kW	A	m	mm^2
TWU 4-1608-C	1~230 V, 50 Hz	4	2.2	15	2.5	4x1.5
TWU 4-1608-C	3~400 V, 50 Hz	4	2.2	5.6	2.5	4x1.5
TWU 4-1611-C	3~400 V, 50 Hz	4	3	7.5	2.5	4x1.5
TWU 4-1613-C	3~400 V, 50 Hz	4	4	10.1	2.5	4x1.5
TWU 4-1615-C	3~400 V, 50 Hz	4	4	10.1	2.5	4x1.5
TWU 4-1620-C	3~400 V, 50 Hz	4	5.5	13.6	2.5	4x1.5

Information for order placements					
Wilo-Sub...	**Mains connection**	🚚	**Art no.**	**Art. no. for cooling jacket pipe**	
				for vertical installation (B)	*for horizontal installation (D)*
TWU 4-1608-C	1~230 V, 50 Hz	L	6061422	4064430	6037935
TWU 4-1608-C	3~400 V, 50 Hz	L	6061423	4064430	6037935
TWU 4-1611-C	3~400 V, 50 Hz	L	6061427	4064431	6038901
TWU 4-1613-C	3~400 V, 50 Hz	L	6061424	4064431	6038901
TWU 4-1615-C	3~400 V, 50 Hz	L	6061425	4064431	6038901
TWU 4-1620-C	3~400 V, 50 Hz	L	6061426	4064431	6038901

Motor efficiency based on 400 V, 50 Hz

Wilo-Sub TWU 4-16..-C

Dimension drawing Wilo-Sub TWU 4

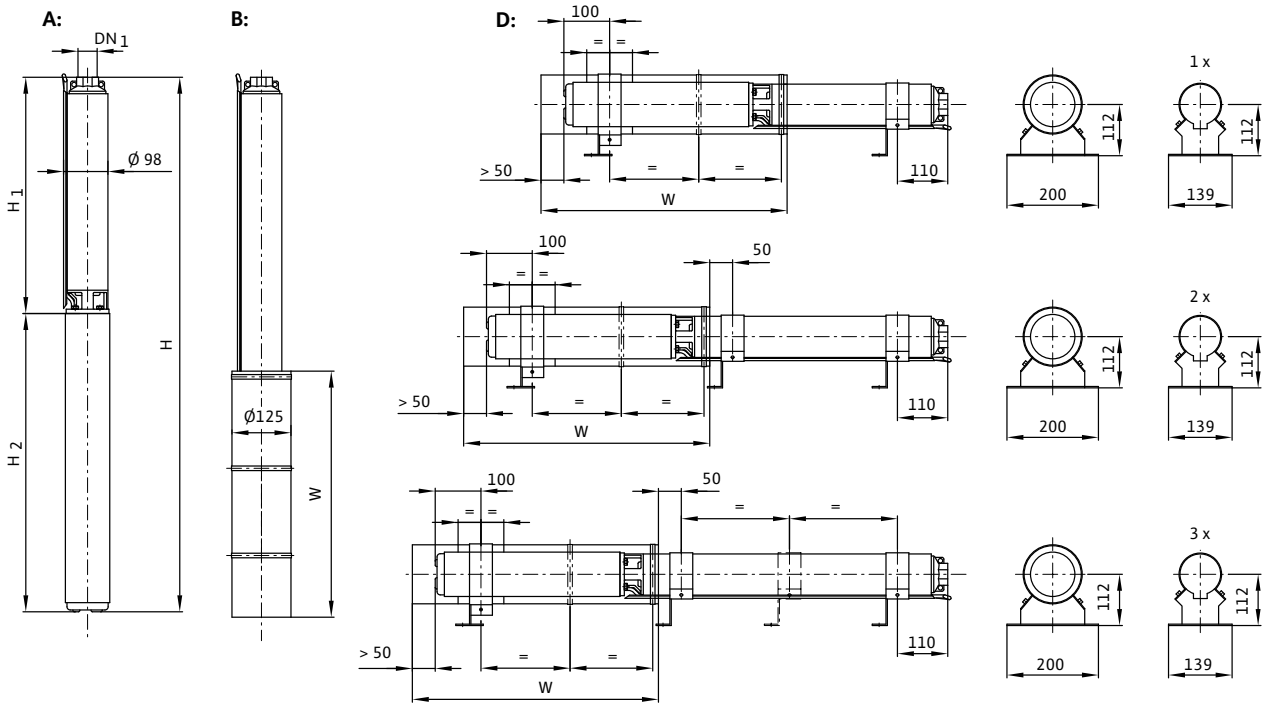

A = vertical, B = vertical with cooling jacket, D = horizontal with cooling jacket

Dimensions, weights

Wilo-Sub...	Mains connection	Pressure connection	Dimensions				Installation	Weight of unit
			H	*H1*	*H2*	*W*		*m*
			mm					kg
TWU 4-1608-C	1~230 V, 50 Hz	Rp 2	1106	676	430	500	A, B, D	22.7
TWU 4-1608-C	3~400 V, 50 Hz	Rp 2	1051	676	375	500	A, B, D	20.5
TWU 4-1611-C	3~400 V, 50 Hz	Rp 2	1360	880	480	750	A, B, D	26.4
TWU 4-1613-C	3~400 V, 50 Hz	Rp 2	1568	1013	555	750	A, B, D	32.7
TWU 4-1615-C	3~400 V, 50 Hz	Rp 2	1704	1149	555	750	A, B, D	33.9
TWU 4-1620-C	3~400 V, 50 Hz	Rp 2	2164	1489	675	750	A, B, D	42.9

Series description Wilo-Sub TWU 4-...-GT

ErP READY — APPLIES TO EUROPEAN DIRECTIVE FOR ENERGY RELATED PRODUCTS

New!

Design
Submersible-motor pump, multi-stage

Type key

e.g.	**Wilo-Sub TWU 4-0203-C-QC-GT**
TWU	Submersible pump
4	Diameter of the hydraulic unit in inches ["]
02	Nominal volume flow [m^3/h]
03	Number of hydraulic stages
C	Series generation
QC	Quick Connect Cable for simple and fast extension for the motor cable
GT	for geothermal applications

Application
- Geothermal applications
- For water supply from boreholes and rainwater storage tanks
- For domestic water supply, sprinkling and irrigation
- Pressure boosting
- Lowering the water level
- For pumping water without long-fibre and abrasive constituents

Special features/product advantages
- Parts that come in contact with fluids are corrosion-free
- Low-wearing due to floating impellers
- Integrated non-return valve
- Simple and quick extension of the motor cable without dismantling the pump (for QC version)
- Vertical and horizontal installation possible

Technical data
- Mains connection: 3~400 V, 50 Hz,
- Immersed operating mode: S1
- Fluid temperature: 3-30 °C
- Minimum flow rate at motor: 0.08 m/s
- Max. sand content: 50 g/m^3
- Max. number of starts: 20/h
- Max. immersion depth: 200 m
- Protection class: IP 68
- Pressure connection: Rp 1¼

Equipment/function
- Multi-stage submersible pump with radial or semi-axial impellers
- Hermetically cast motors
- Integrated non-return valve
- NEMA coupling
- Three-phase motor

Materials
- Hydraulic housing: Stainless steel 1.4301
- Impellers: Noryl
- Hydraulics shaft: Stainless steel 1.4104
- Motor housing: Stainless steel 1.4301
- Motor shaft: Stainless steel 1.4305

Description/design
Submersible pump for vertical or horizontal installation.

Hydraulics
Multi-stage submersible pump with radial or semi-axial impellers in sectional construction. Integrated non-return valve. All parts in contact with the fluid are made of corrosion-free materials.

Motor
Corrosion-free three-phase motor for direct starting. Sealed and hermetically cast motor with enamel-insulated winding, resin-impregnated, self-lubricating bearing, with water-glycol filling.

Cooling
The motor is cooled by the fluid. The motor must always be operated in submerged state. The limit values for the maximum fluid temperature and the minimum flow rate must not be exceeded. Vertical installation is possible optionally with or without cooling jacket. Cooling jacket is required for horizontal installation.

Options
- Motor versions for special voltages 3~380 V, 60 Hz; 3~460 V, 60 Hz

Series description Wilo-Sub TWU 4-...-GT

Scope of delivery
- Hydraulics and motor ready assembled
- Connecting cable approved for potable water (cross-section 4 x 1.5 mm^2)
- Installation and operating instructions

Accessories
- Cooling jacket pipes
- Diaphragm pressure vessel
- Cable kits for potable and process water
- Float switch
- Switchgears
- Connection and installation material

Configuration
- No suction mode is possible with these units!
- The unit must be fully immersed in water during operation.

General notes - ErP (ecological design-) directive
Minimum Efficiency Index (MEI) ≥ 0.7
- The benchmark for most efficient water pumps is MEI ≥ 0.70
- The efficiency of a pump with a trimmed impeller is usually lower than that of a pump with the full impeller diameter. The trimming of the impeller will adapt the pump to a fixed duty point, leading to reduced energy consumption. The minimum efficiency index (MEI) is based on the full impeller diameter.
- The operation of this water pump with variable duty points may be more efficient and economic when controlled, for example, by the use of a variable speed drive that matches the pump duty to the system.
- Information on benchmark efficiency is available at **www.europump.org/efficiencycharts**

Pump curves

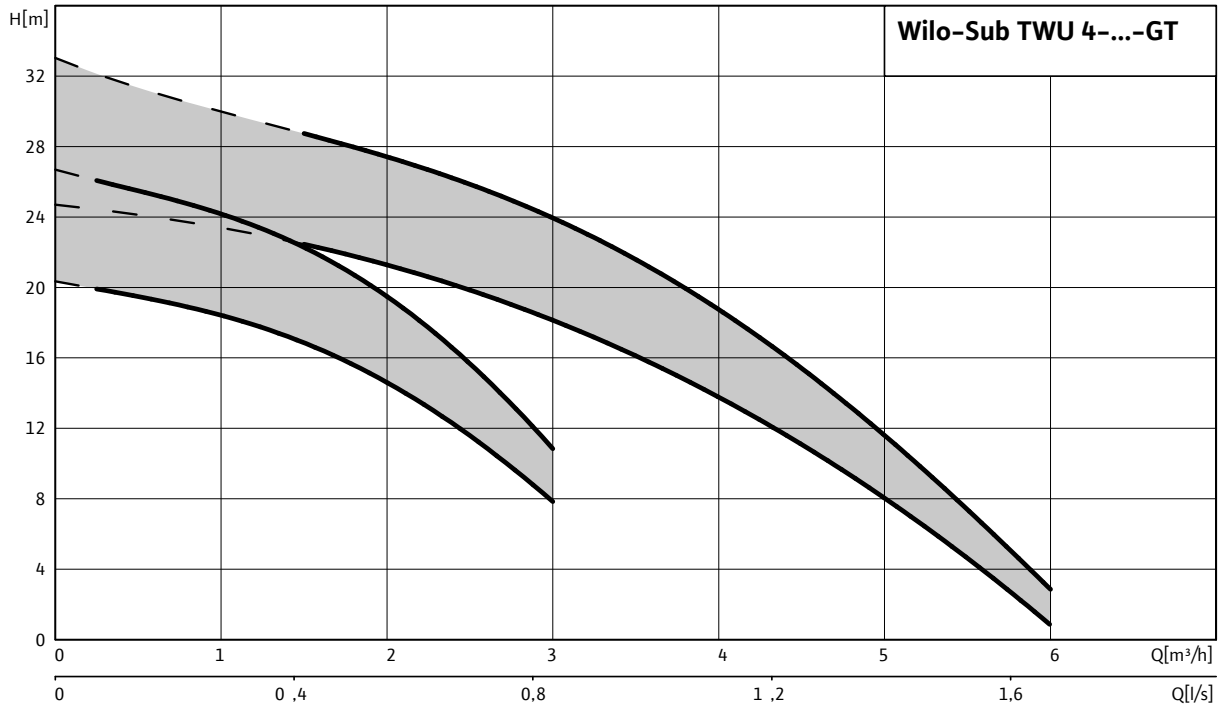

Wilo-Sub TWU 4-...-GT

Pump curves Wilo-Sub TWU 4-..-C..GT

Minimum Efficiency Index (MEI): ≥ 0.7

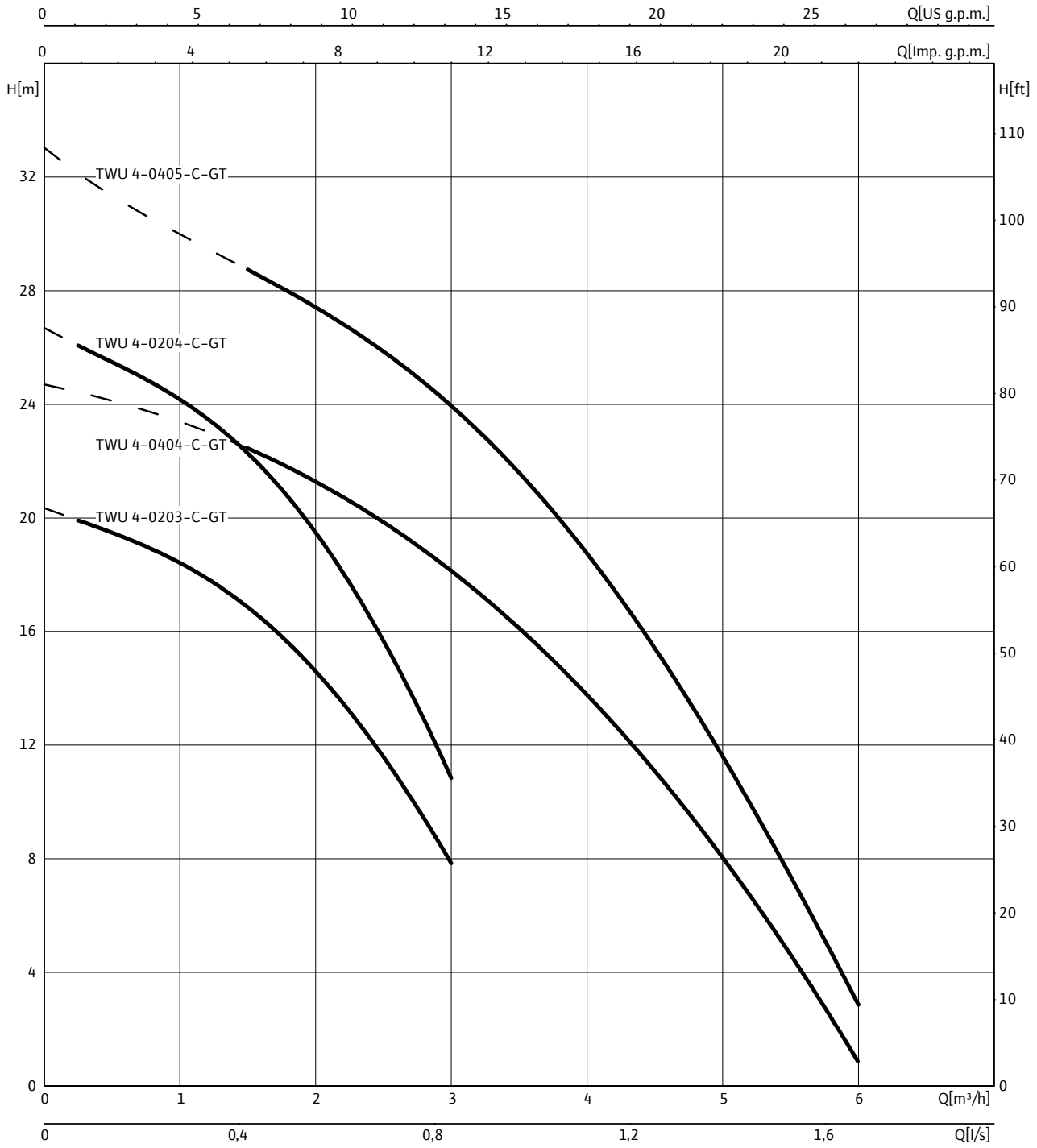

3~400 V, 50 Hz, p = 1 kg/dm^3, v = 1x10^{-6} m^2/s, ISO 9906 Annex A

Wilo-Sub TWU 4-...-GT

Motor data

Wilo-Sub...	Mains connection	Motor diameter	Nominal motor power	Nominal current	Length of connecting cable	Cable cross-section
		Ø	P_2	I_N		
		"	kW	A	m	mm^2
TWU 4-0203-C-GT	3~400 V, 50 Hz	4	0.25	0.7	15	4x1.5
TWU 4-0204-C-GT	3~400 V, 50 Hz	4	0.25	0.7	15	4x1.5
TWU 4-0404-C-GT	3~400 V, 50 Hz	4	0.25	0.7	15	4x1.5
TWU 4-0405-C-GT	3~400 V, 50 Hz	4	0.37	1.1	15	4x1.5
TWU 4-0203-C-QC-GT	3~400 V, 50 Hz	4	0.25	0.7	2.5	4x1.5
TWU 4-0204-C-QC-GT	3~400 V, 50 Hz	4	0.25	0.7	2.5	4x1.5
TWU 4-0404-C-QC-GT	3~400 V, 50 Hz	4	0.25	0.7	1.5	4x1.5
TWU 4-0405-C-QC-GT	3~400 V, 50 Hz	4	0.37	1.1	1.5	4x1.5

Information for order placements

Wilo-Sub...	Mains connection	🚚	Art no.	Art. no. for cooling jacket pipe	
				for vertical installation (B)	*for horizontal installation (D)*
TWU 4-0203-C-GT	3~400 V, 50 Hz	L	6060195	4064430	6037935
TWU 4-0204-C-GT	3~400 V, 50 Hz	L	6060196	4064430	6037935
TWU 4-0404-C-GT	3~400 V, 50 Hz	L	6065751	4064430	6037935
TWU 4-0405-C-GT	3~400 V, 50 Hz	L	6065752	4064430	6037935
TWU 4-0203-C-QC-GT	3~400 V, 50 Hz	L	6060197	4064430	6037935
TWU 4-0204-C-QC-GT	3~400 V, 50 Hz	L	6060194	4064430	6037935
TWU 4-0404-C-QC-GT	3~400 V, 50 Hz	L	6065753	4064430	6037935
TWU 4-0405-C-QC-GT	3~400 V, 50 Hz	L	6065754	4064430	6037935

Motor efficiency based on 400 V, 50 Hz

Wilo-Sub TWU 4-...-GT

Dimension drawing

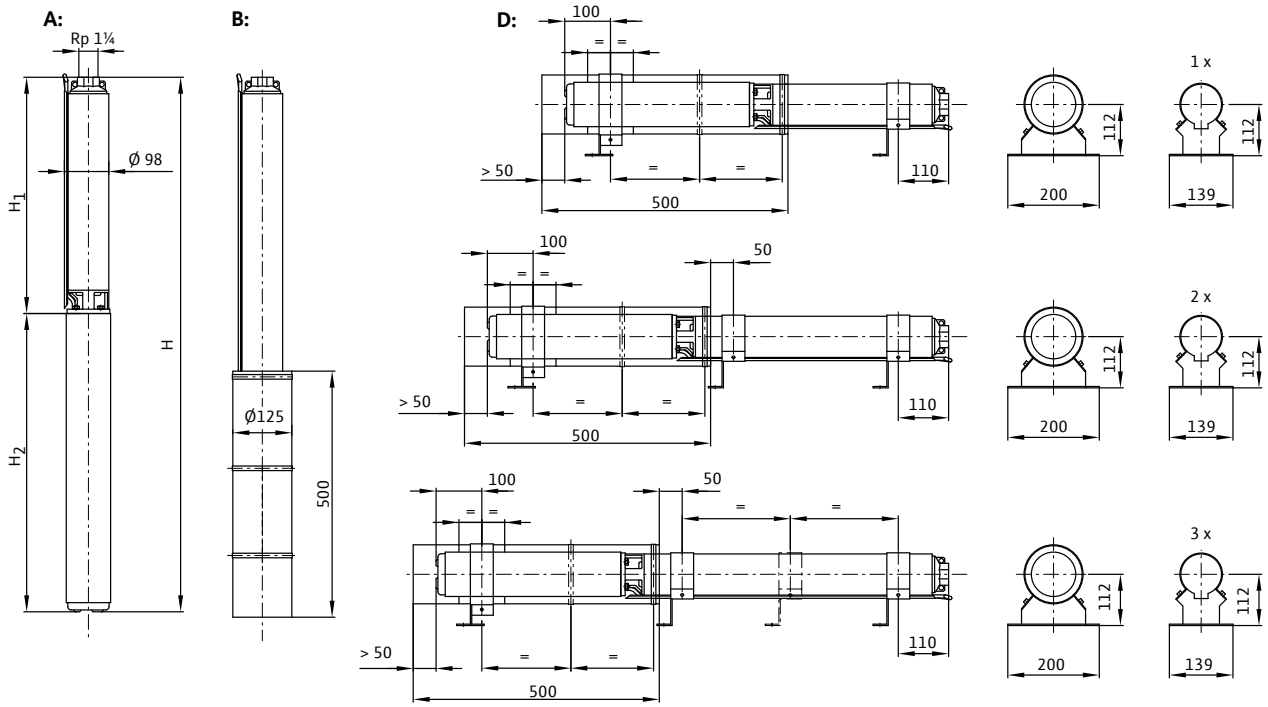

A = vertical, B = vertical with cooling jacket, D = horizontal with cooling jacket

Dimensions, weights

Wilo-Sub...	Mains connection	Pressure connection	Dimensions			Installation	Weight of unit
			H	*H1*	*H2*		*m*
			mm				kg
TWU 4-0203-C-GT	3~400 V, 50 Hz	Rp 1¼	425	202	223	A, B, D	9.5
TWU 4-0204-C-GT	3~400 V, 50 Hz	Rp 1¼	442	219	223	A, B, D	9.7
TWU 4-0404-C-GT	3~400 V, 50 Hz	Rp 1¼	521	271	250	A, B, D	10
TWU 4-0405-C-GT	3~400 V, 50 Hz	Rp 1¼	506	271	235	A, B, D	12
TWU 4-0203-C-QC-GT	3~400 V, 50 Hz	Rp 1¼	574	324	250	A, B, D	9.5
TWU 4-0204-C-QC-GT	3~400 V, 50 Hz	Rp 1¼	589	324	265	A, B, D	9.7
TWU 4-0404-C-QC-GT	3~400 V, 50 Hz	Rp 1¼	689	394	295	A, B, D	10
TWU 4-0405-C-QC-GT	3~400 V, 50 Hz	Rp 1¼	659	394	265	A, B, D	12

Series description Wilo-Sub TWU 4-QC

ErP READY — APPLIES TO EUROPEAN DIRECTIVE FOR ENERGY RELATED PRODUCTS

Design
Submersible pump, multistage

Type key

e.g.	**Wilo-Sub TWU 4-0203-C-QC**
TWU	Submersible pump
4	Diameter of the hydraulic unit in inches ["]
02	Nominal volume flow [m^3/h]
03	Number of hydraulic stages
C	Series generation
QC	Quick Connect Cable for simple and fast extension for the motor cable

Application
- For water supply from boreholes and rainwater storage tanks
- For domestic water supply, sprinkling and irrigation
- Pressure boosting
- Lowering the water level
- For pumping water without long-fibre and abrasive constituents

Special features/product advantages
- Parts that come in contact with fluids are corrosion-free
- Low-wearing due to floating impellers
- Integrated non-return valve
- Quick and easy extension of motor cable, without dismantling the pump
- Vertical and horizontal installation possible

Technical data
- Mains connection: 1~230 V, 50 Hz or 3~400 V, 50 Hz
- Immersed operating mode: S1
- Fluid temperature: 3-30 °C
- Minimum flow rate at motor: 0.08 m/s
- Max. sand content: 50 g/m^3
- Max. number of starts: 20/h
- Max. immersion depth: 200 m
- Protection class: IP 68
- Pressure connection: Rp 1¼ - Rp 2

Equipment/function
- Multistage submersible-motor pump with radial or semi-axial impellers
- Hermetically cast motors
- Integrated non-return valve
- NEMA coupling
- Single-phase or three-phase motor
- Integrated thermal motor protection for single-phase motor

Materials
- Hydraulic housing: 1.4301 stainless steel
- Impellers: Noryl
- Hydraulics shaft: 1.4104 stainless steel
- Motor housing: 1.4301 stainless steel
- Motor shaft: 1.4305 stainless steel

Description/design
Submersible-motor pump for vertical or horizontal installation.

Hydraulics
Multistage submersible-motor pump with radial or semi-axial impellers in sectional construction. Integrated non-return valve. All parts in contact with the fluid are made of corrosion-free materials.

Motor
Corrosion-free single-phase or three-phase AC motor for direct starting. Sealed and hermetically cast motor, resin-impregnated, with enamel-insulated winding, self-lubricating bearing, with water-glycol filling.

Cooling
The motor is cooled by the fluid. The motor must always be operated in submerged state. The limit values for the max. fluid temperature and the minimum flow rate must not be exceeded. Vertical installation is possible optionally with or without cooling jacket. Cooling jacket is required for horizontal installation.

Options
- Motor versions for special voltages 1~230 V, 60 Hz; 3~380 V, 60 Hz

Series description Wilo-Sub TWU 4-QC

Scope of delivery
- Hydraulics + motor fully mounted
- 1.5 or 1.75 m connecting cable approved for potable water (cross-section: 4x1.5 mm^2)
- Cable binders
- Retaining cable made of polypropylene
- 1x clamp for fixing the retaining cable to the unit
- Single-phase version including switchbox with capacitor, thermal motor protection and On/Off switch
- Installation and operating instructions

Accessories
- Quick Connect Cable: Quick-connection cable for fast and easy extension of the motor cable.
- Cooling jacket pipes
- Diaphragm pressure vessel
- Cable kits for potable and process water
- Float switch
- Switchgears
- Connection and installation material

Configuration
- No suction mode is possible with these units!
- The unit must be fully immersed in water during operation.

General notes - ErP (ecological design-) directive
Minimum Efficiency Index (MEI) ≥ 0.1
- The benchmark for most efficient water pumps is MEI ≥ 0.70
- The efficiency of a pump with a trimmed impeller is usually lower than that of a pump with the full impeller diameter. The trimming of the impeller will adapt the pump to a fixed duty point, leading to reduced energy consumption. The minimum efficiency index (MEI) is based on the full impeller diameter.
- The operation of this water pump with variable duty points may be more efficient and economic when controlled, for example, by the use of a variable speed drive that matches the pump duty to the system.
- Information on benchmark efficiency is available at **www.europump.org/efficiencycharts**

Pump curves

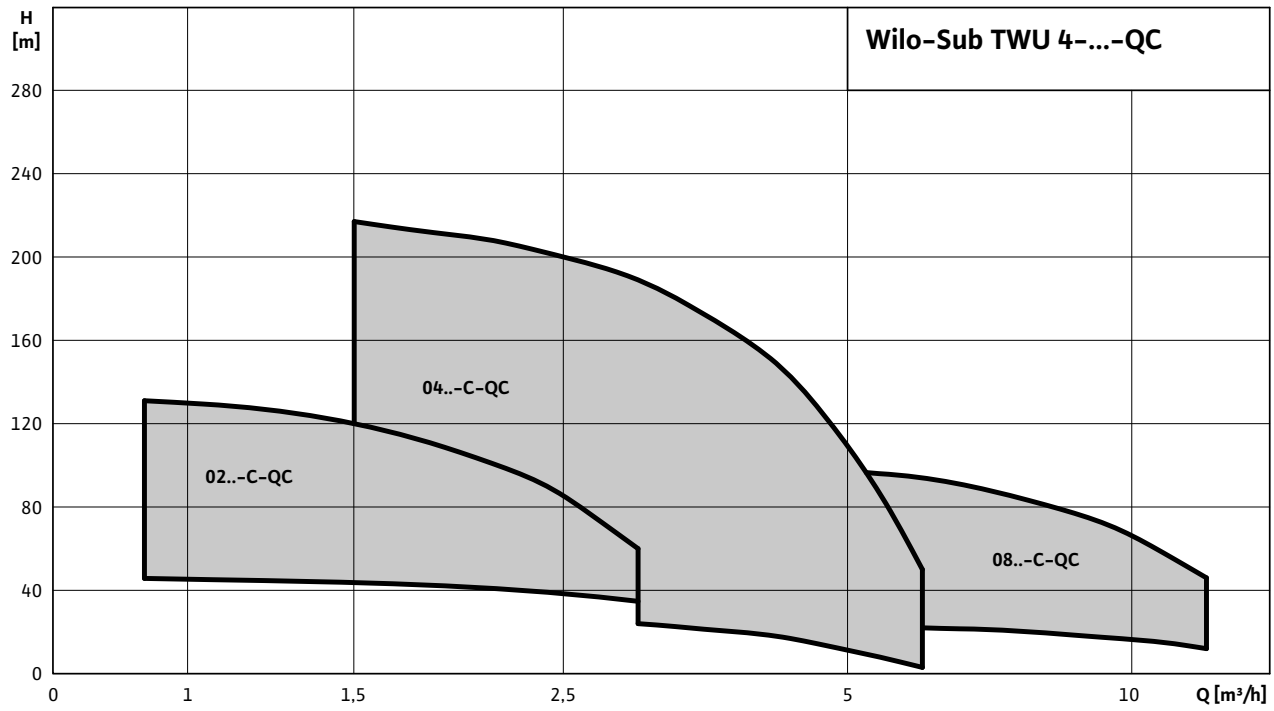

Wilo-Sub TWU 4-02..-C-QC

Pump curves Wilo-Sub TWU 4-02..-C-QC

Minimum Efficiency Index (MEI): ≥ 0.7

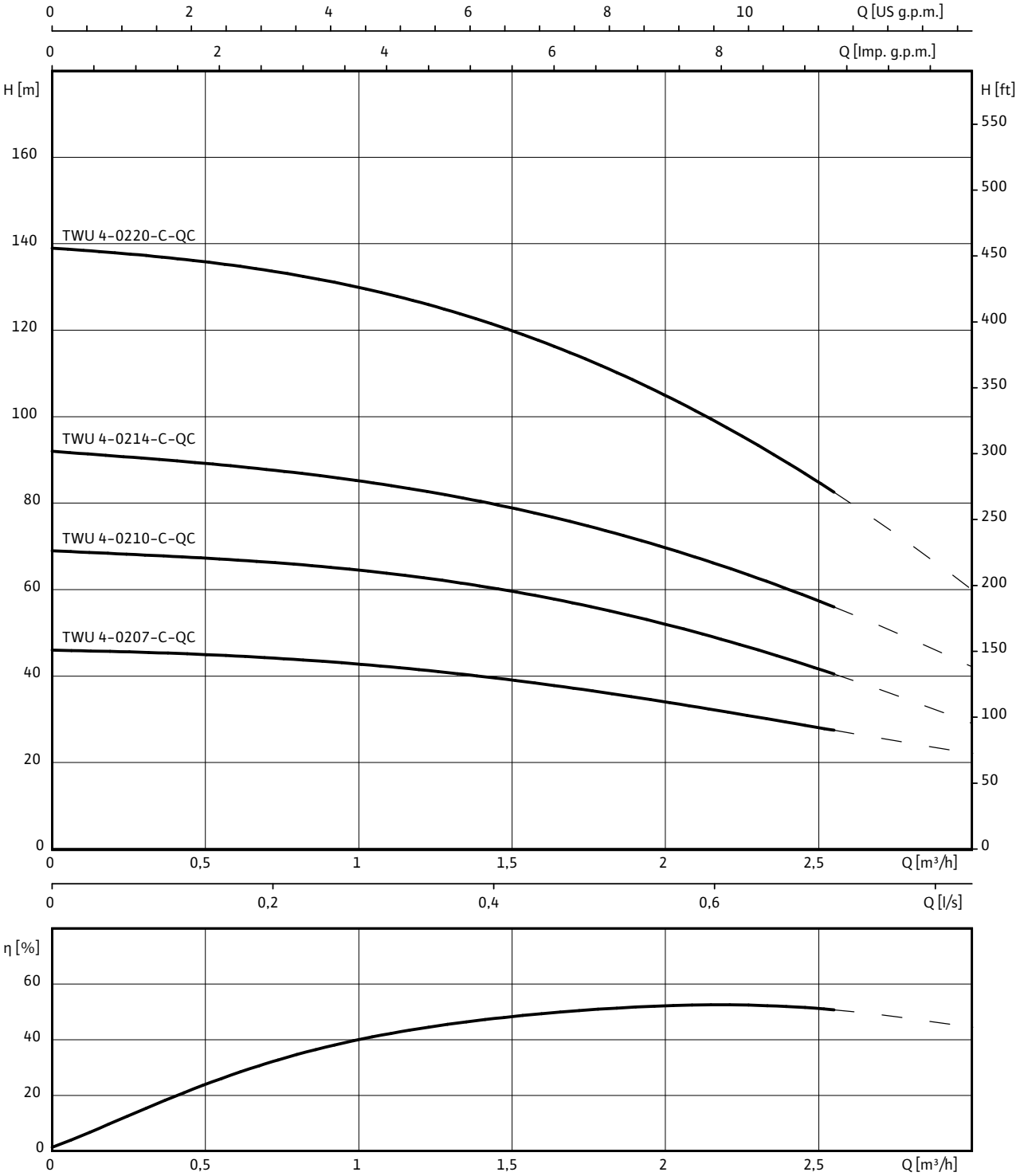

1~230 V or 3~400 V, 50 Hz, p = 1 kg/dm^3, v = 1x10^{-6} m^2/s, ISO 9906 Annex A, η = pump efficiency

Wilo-Sub TWU 4-02..-C-QC

Motor data

Wilo-Sub...	Mains connection	Motor diameter	Nominal motor power	Nominal current	Length of connecting cable	Cable cross-section
		Ø	P_2	I_N		
		"	kW	A	m	mm^2
TWU 4-0207-C-QC	1~230 V, 50 Hz	4	0.37	3.4	2.5	4x1.5
TWU 4-0207-C-QC	3~400 V, 50 Hz	4	0.37	1.2	2.5	4x1.5
TWU 4-0210-C-QC	1~230 V, 50 Hz	4	0.55	4.4	2.5	4x1.5
TWU 4-0210-C-QC	3~400 V, 50 Hz	4	0.55	1.7	2.5	4x1.5
TWU 4-0214-C-QC	1~230 V, 50 Hz	4	0.75	5.9	2.5	4x1.5
TWU 4-0214-C-QC	3~400 V, 50 Hz	4	0.75	2.2	2.5	4x1.5
TWU 4-0220-C-QC	1~230 V, 50 Hz	4	1.1	7.8	2.5	4x1.5
TWU 4-0220-C-QC	3~400 V, 50 Hz	4	1.1	3	2.5	4x1.5

Information for order placements

Wilo-Sub...	Mains connection		Art no.	Art. no. for cooling jacket pipe	
				for vertical installation (B)	*for horizontal installation (D)*
TWU 4-0207-C-QC	1~230 V, 50 Hz	L	6046685	4064430	6037935
TWU 4-0207-C-QC	3~400 V, 50 Hz	L	6046682	4064430	6037935
TWU 4-0210-C-QC	1~230 V, 50 Hz	L	6046684	4064430	6037935
TWU 4-0210-C-QC	3~400 V, 50 Hz	L	6046681	4064430	6037935
TWU 4-0214-C-QC	1~230 V, 50 Hz	L	6046683	4064430	6037935
TWU 4-0214-C-QC	3~400 V, 50 Hz	L	6046680	4064430	6037935
TWU 4-0220-C-QC	1~230 V, 50 Hz	L	6049365	4064430	6037935
TWU 4-0220-C-QC	3~400 V, 50 Hz	L	6049372	4064430	6037935

Motor efficiency based on 400 V, 50 Hz

Wilo-Sub TWU 4-02..-C-QC

Dimension drawing Wilo-Sub TWU 4

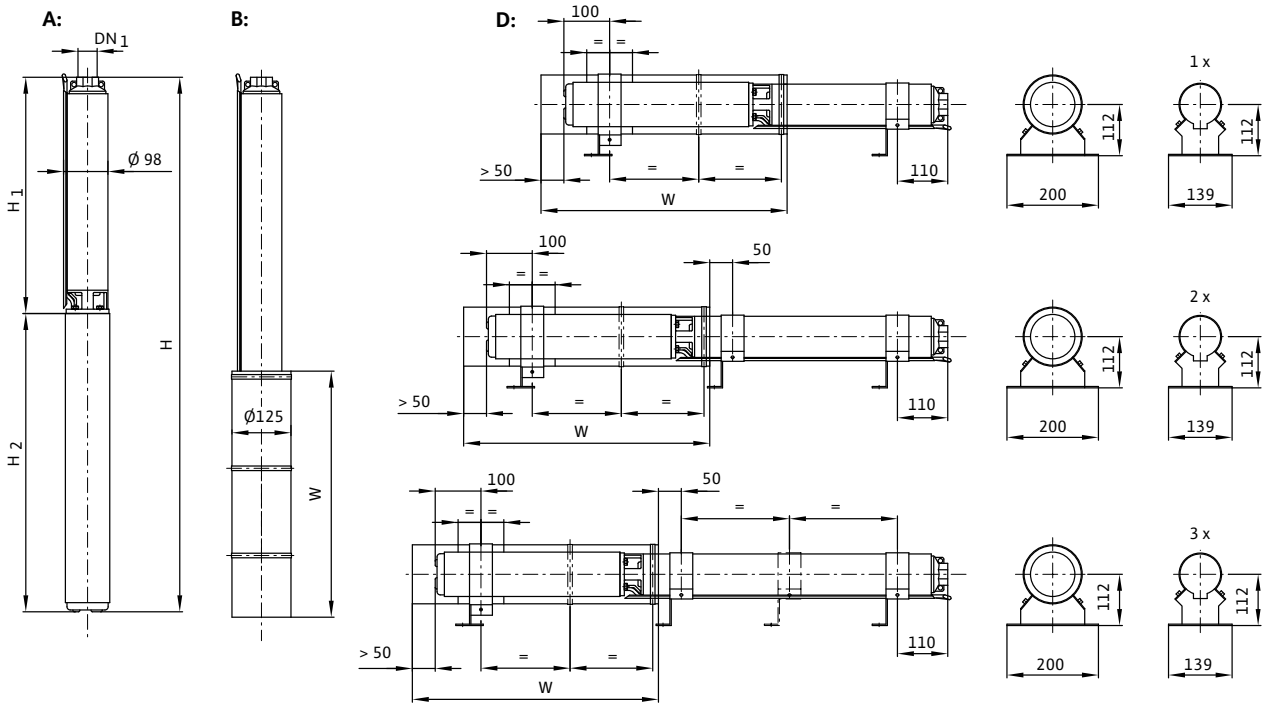

A = vertical, B = vertical with cooling jacket, D = horizontal with cooling jacket

Dimensions, weights

Wilo-Sub...	Mains connection	Pressure connection	Dimensions				Installation	Weight of unit
			H	*H1*	*H2*	*W*		*m*
			mm					kg
TWU 4-0207-C-QC	1~230 V, 50 Hz	Rp 1¼	521	271	250	500	A, B, D	9.6
TWU 4-0207-C-QC	3~400 V, 50 Hz	Rp 1¼	506	271	235	500	A, B, D	8.6
TWU 4-0210-C-QC	3~400 V, 50 Hz	Rp 1¼	574	324	250	500	A, B, D	10.3
TWU 4-0210-C-QC	1~230 V, 50 Hz	Rp 1¼	589	324	265	500	A, B, D	11.4
TWU 4-0214-C-QC	1~230 V, 50 Hz	Rp 1¼	689	394	295	500	A, B, D	12.2
TWU 4-0214-C-QC	3~400 V, 50 Hz	Rp 1¼	659	394	265	500	A, B, D	12.2
TWU 4-0220-C-QC	1~230 V, 50 Hz	Rp 1¼	839	499	340	500	A, B, D	16.1
TWU 4-0220-C-QC	3~400 V, 50 Hz	Rp 1¼	794	499	295	500	A, B, D	15.8

Wilo-Sub TWU 4-04..-C-QC

Pump curves Wilo-Sub TWU 4-04..-C-QC

Minimum Efficiency Index (MEI): ≥ 0.7

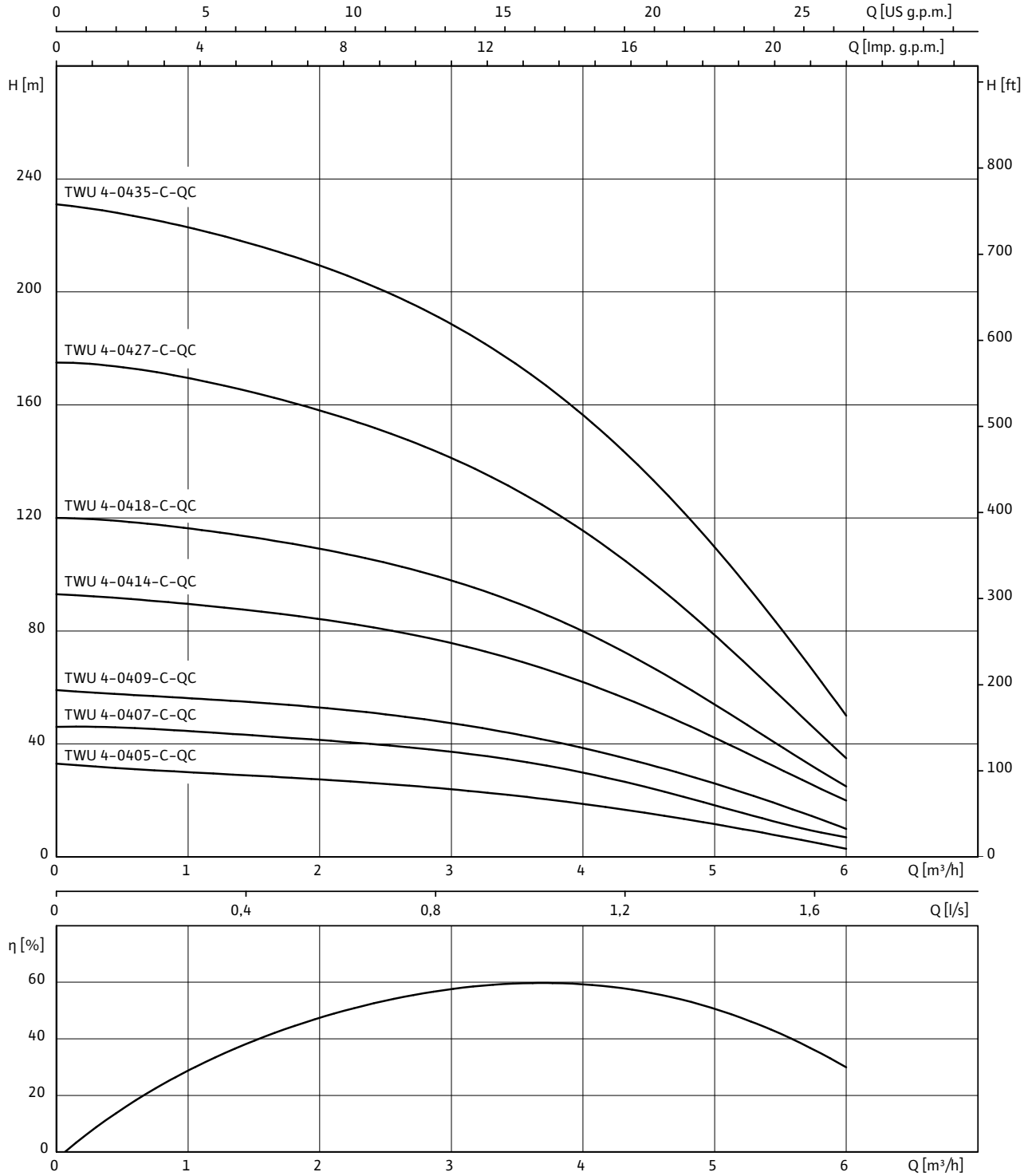

1~230 V or 3~400 V, 50 Hz, p = 1 kg/dm^3, v = 1x10^{-6} m^2/s, ISO 9906 Annex A, η = pump efficiency

Wilo-Sub TWU 4-04..-C-QC

Motor data

Wilo-Sub...	Mains connection	Motor diameter	Nominal motor power	Nominal current	Length of connecting cable	Cable cross-section
		Ø	P_2	I_N		
		"	kW	A	m	mm^2
TWU 4-0405-C-QC	1~230 V, 50 Hz	4	0.37	3.4	2.5	4x1.5
TWU 4-0405-C-QC	3~400 V, 50 Hz	4	0.37	1.2	2.5	4x1.5
TWU 4-0407-C-QC	1~230 V, 50 Hz	4	0.55	4.4	2.5	4x1.5
TWU 4-0407-C-QC	3~400 V, 50 Hz	4	0.55	1.7	2.5	4x1.5
TWU 4-0409-C-QC	1~230 V, 50 Hz	4	0.75	5.9	2.5	4x1.5
TWU 4-0409-C-QC	3~400 V, 50 Hz	4	0.75	2.2	2.5	4x1.5
TWU 4-0414-C-QC	1~230 V, 50 Hz	4	1.1	7.8	2.5	4x1.5
TWU 4-0414-C-QC	3~400 V, 50 Hz	4	1.1	3	2.5	4x1.5
TWU 4-0418-C-QC	3~400 V, 50 Hz	4	1.5	4	2.5	4x1.5
TWU 4-0427-C-QC	3~400 V, 50 Hz	4	2.2	5.6	2.5	4x1.5
TWU 4-0435-C-QC	3~400 V, 50 Hz	4	3	7.5	2.5	4x1.5

Information for order placements

Wilo-Sub...	Mains connection	🚚	Art no.	Art. no. for cooling jacket pipe	
				for vertical installation (B)	*for horizontal installation (D)*
TWU 4-0405-C-QC	1~230 V, 50 Hz	L	6049366	4064430	6037935
TWU 4-0405-C-QC	3~400 V, 50 Hz	L	6049373	4064430	6037935
TWU 4-0407-C-QC	1~230 V, 50 Hz	L	6049367	4064430	6037935
TWU 4-0407-C-QC	3~400 V, 50 Hz	L	6049374	4064430	6037935
TWU 4-0409-C-QC	1~230 V, 50 Hz	L	6049368	4064430	6037935
TWU 4-0409-C-QC	3~400 V, 50 Hz	L	6049375	4064430	6037935
TWU 4-0414-C-QC	1~230 V, 50 Hz	L	6049369	4064430	6037935
TWU 4-0414-C-QC	3~400 V, 50 Hz	L	6049376	4064430	6037935
TWU 4-0418-C-QC	3~400 V, 50 Hz	L	6049377	4064430	6037935
TWU 4-0427-C-QC	3~400 V, 50 Hz	L	6049378	4064430	6037935
TWU 4-0435-C-QC	3~400 V, 50 Hz	L	6049379	4064431	6038901

Motor efficiency based on 400 V, 50 Hz

Wilo-Sub TWU 4-04..-C-QC

Dimension drawing Wilo-Sub TWU 4

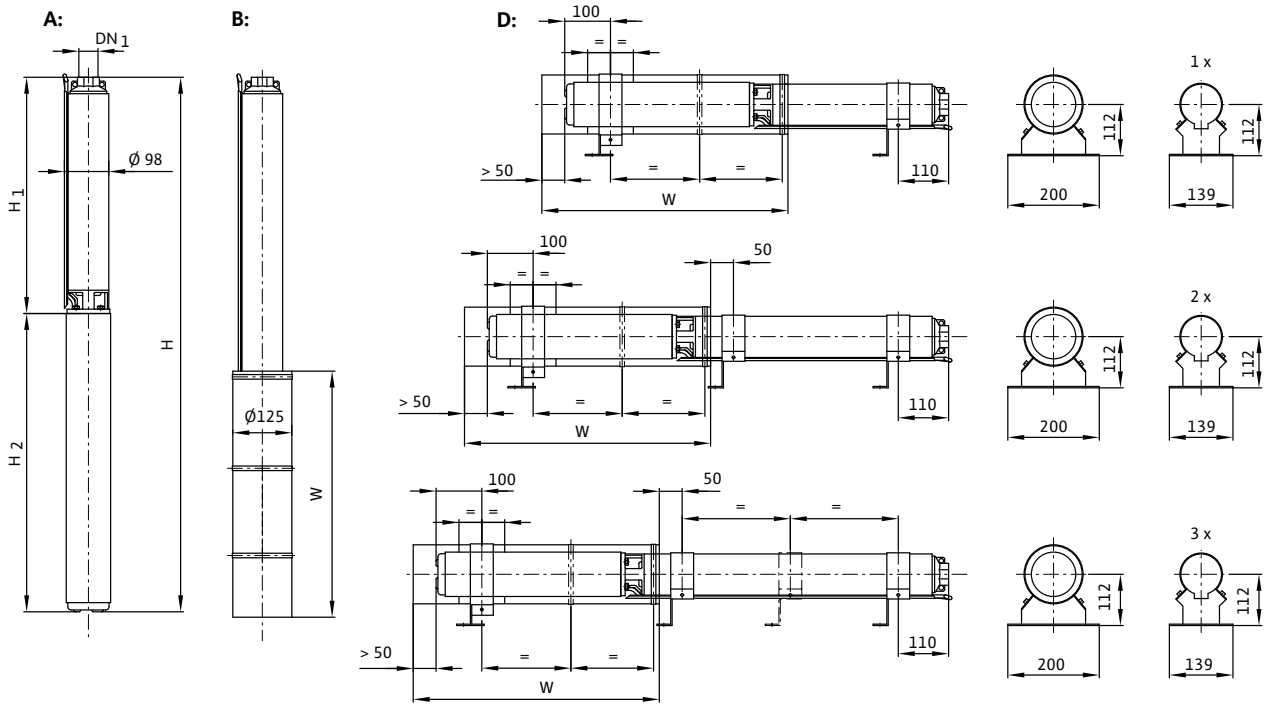

A = vertical, B = vertical with cooling jacket, D = horizontal with cooling jacket

Dimensions, weights

Wilo-Sub...	Mains connection	Pressure connection	Dimensions				Installation	Weight of unit
			H	*H1*	*H2*	*W*		*m*
			mm					kg
TWU 4-0405-C-QC	1~230 V, 50 Hz	Rp 1¼	507	257	250	500	A, B, D	9.5
TWU 4-0405-C-QC	3~400 V, 50 Hz	Rp 1¼	492	257	235	500	A, B, D	8.5
TWU 4-0407-C-QC	1~230 V, 50 Hz	Rp 1¼	566	301	265	500	A, B, D	11.1
TWU 4-0407-C-QC	3~400 V, 50 Hz	Rp 1¼	551	301	250	500	A, B, D	10
TWU 4-0409-C-QC	1~230 V, 50 Hz	Rp 1¼	639	344	295	500	A, B, D	13.9
TWU 4-0409-C-QC	3~400 V, 50 Hz	Rp 1¼	609	344	265	500	A, B, D	11.6
TWU 4-0414-C-QC	1~230 V, 50 Hz	Rp 1¼	792	452	340	500	A, B, D	15.3
TWU 4-0414-C-QC	3~400 V, 50 Hz	Rp 1¼	747	452	295	500	A, B, D	15
TWU 4-0418-C-QC	3~400 V, 50 Hz	Rp 1¼	878	538	340	500	A, B, D	16.1
TWU 4-0427-C-QC	3~400 V, 50 Hz	Rp 1¼	1142	767	375	500	A, B, D	20.4
TWU 4-0435-C-QC	3~400 V, 50 Hz	Rp 1¼	1414	934	480	750	A, B, D	26.2

Wilo-Sub TWU 4-08..-C-QC

Pump curves Wilo-Sub TWU 4-08..-C-QC

Minimum Efficiency Index (MEI): ≥ 0.1

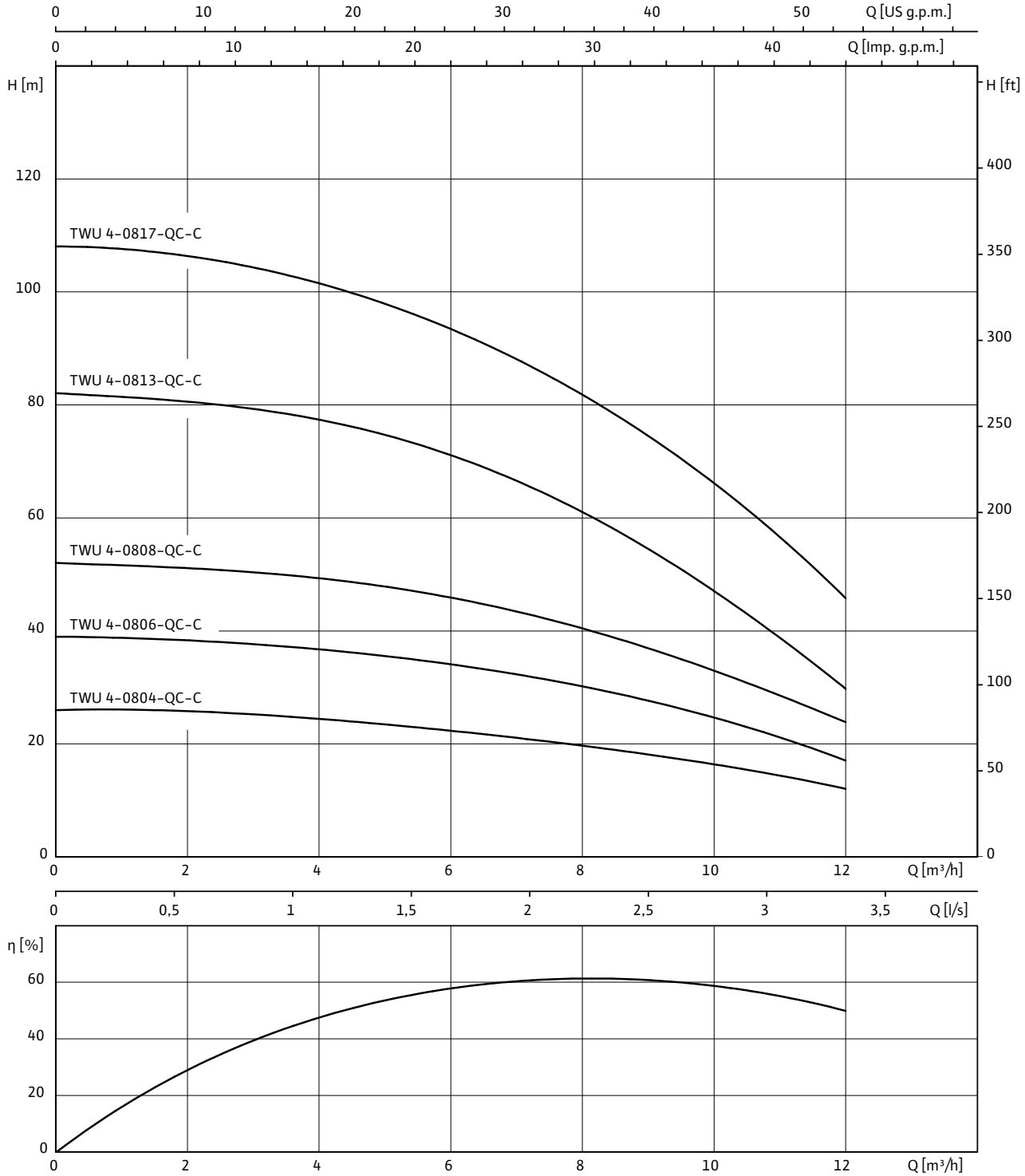

1~230 V or 3~400 V, 50 Hz, p = 1 kg/dm^3, v = 1x10^{-6} m^2/s, ISO 9906 Annex A, η = pump efficiency

Wilo-Sub TWU 4-08..-C-QC

Motor data						
Wilo-Sub...	**Mains connection**	**Motor diameter**	**Nominal motor power**	**Nominal current**	**Length of connecting cable**	**Cable cross-section**
		Ø	P_2	I_N		
		"	kW	A	m	mm^2
TWU 4-0804-C-QC	1~230 V, 50 Hz	4	0.75	5.9	2.5	4x1.5
TWU 4-0804-C-QC	3~400 V, 50 Hz	4	0.75	4	2.5	4x1.5
TWU 4-0806-C-QC	1~230 V, 50 Hz	4	1.1	7.8	2.5	4x1.5
TWU 4-0806-C-QC	3~400 V, 50 Hz	4	1.1	3	2.5	4x1.5
TWU 4-0808-C-QC	3~400 V, 50 Hz	4	1.5	4	2.5	4x1.5
TWU 4-0813-C-QC	3~400 V, 50 Hz	4	2.2	5.6	2.5	4x1.5
TWU 4-0817-C-QC	3~400 V, 50 Hz	4	3	7.5	2.5	4x1.5

Information for order placements					
Wilo-Sub...	**Mains connection**		**Art no.**	**Art. no. for cooling jacket pipe**	
				for vertical installation (B)	*for horizontal installation (D)*
TWU 4-0804-C-QC	1~230 V, 50 Hz	L	6049370	4064430	6037935
TWU 4-0804-C-QC	3~400 V, 50 Hz	L	6049380	4064430	6037935
TWU 4-0806-C-QC	1~230 V, 50 Hz	L	6049371	4064430	6037935
TWU 4-0806-C-QC	3~400 V, 50 Hz	L	6049381	4064430	6037935
TWU 4-0808-C-QC	3~400 V, 50 Hz	L	6049382	4064430	6037935
TWU 4-0813-C-QC	3~400 V, 50 Hz	L	6049383	4064430	6037935
TWU 4-0817-C-QC	3~400 V, 50 Hz	L	6049384	4064431	6038901

Motor efficiency based on 400 V, 50 Hz

Wilo-Sub TWU 4-08..-C-QC

Dimension drawing Wilo-Sub TWU 4

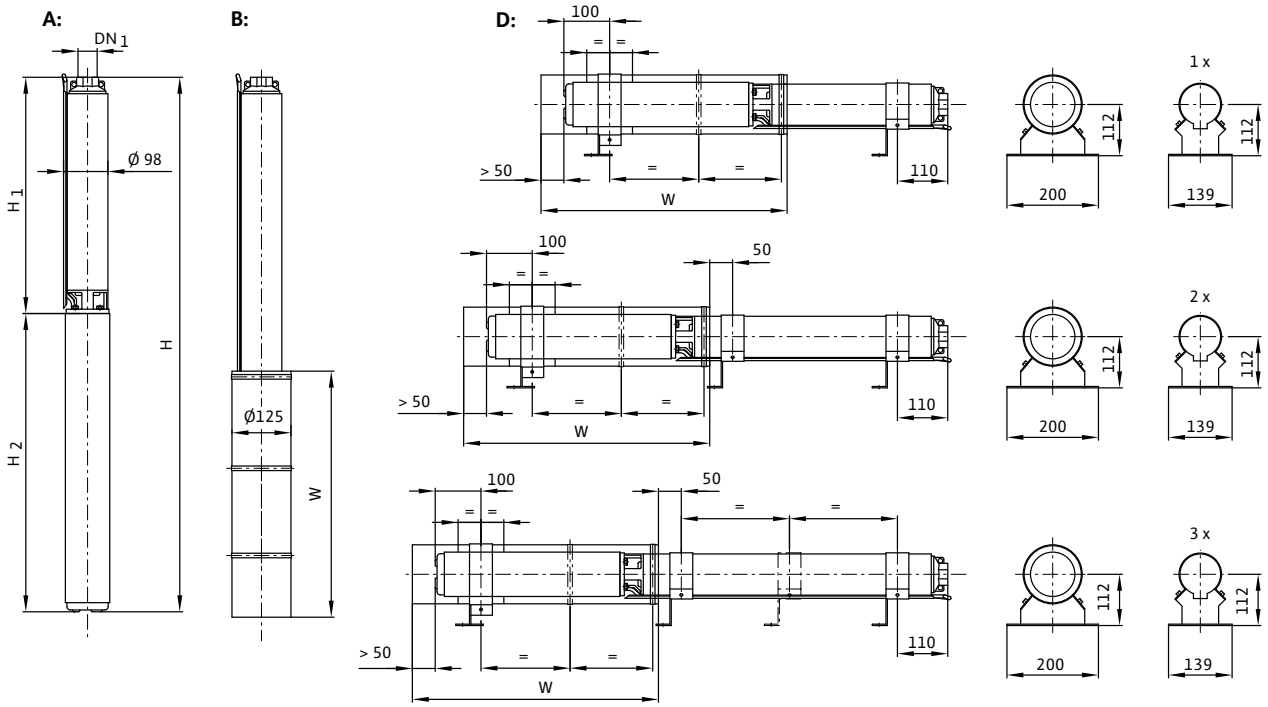

A = vertical, B = vertical with cooling jacket, D = horizontal with cooling jacket

Dimensions, weights

Wilo-Sub...	Mains connection	Pressure connection	Dimensions				Installation	Weight of unit
			H	*H1*	*H2*	*W*		*m*
			mm					kg
TWU 4-0804-C-QC	1~230 V, 50 Hz	Rp 2	589	294	295	500	A, B, D	13.4
TWU 4-0804-C-QC	3~400 V, 50 Hz	Rp 2	559	294	265	500	A, B, D	11.1
TWU 4-0806-C-QC	1~230 V, 50 Hz	Rp 2	696	356	340	500	A, B, D	14.6
TWU 4-0806-C-QC	3~400 V, 50 Hz	Rp 2	651	356	295	500	A, B, D	14.3
TWU 4-0808-C-QC	3~400 V, 50 Hz	Rp 2	758	418	340	500	A, B, D	15.4
TWU 4-0813-C-QC	3~400 V, 50 Hz	Rp 2	948	573	375	500	A, B, D	19.7
TWU 4-0817-C-QC	3~400 V, 50 Hz	Rp 2	1177	697	480	750	A, B, D	24.9

Domestic water supply

Submersible pumps

Series description Wilo-Sub TWI 4-..-B

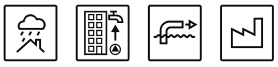

ErP READY — APPLIES TO EUROPEAN DIRECTIVE FOR ENERGY RELATED PRODUCTS

Design
Submersible pump, multistage

Type key

e.g.	**Wilo-Sub TWI 4.01-09-B**
TWI	Submersible pump
4	Diameter of the hydraulic unit in inches ["]
01	Nominal volume flow [m^3/h]
09	Number of hydraulic stages
B	Series generation

Application
- For water and potable water supply from boreholes and rainwater storage
- Process water supply
- For municipal water supply, sprinkling and irrigation
- Pressure boosting
- Lowering the water level
- For pumping water in industrial applications
- For pumping water without long-fibre and abrasive constituents

Special features/product advantages
- Easy maintenance due to rapid installation and dismantling
- Integrated non-return valve
- Vertical and horizontal installation possible

Technical data
- Mains connection: 1~230 V, 50 Hz or 3~400 V, 50 Hz
- Immersed operating mode: S1
- Fluid temperature: 3-30 °C
- Minimum flow rate at motor: 0.1 m/s
- Max. sand content: 50 g/m^3
- Max. number of starts: 20/h
- Max. immersion depth: 350 m
- Protection class: IP 68
- Pressure connection: Rp 1¼ - Rp 2

Equipment/function
- Multistage submersible-motor pump with radial impellers
- Integrated non-return valve
- NEMA coupling
- Single-phase or three-phase motor
- Hermetically cast motors

Materials
- Hydraulic housing: 1.4301 stainless steel
- Impellers: 1.4301 stainless steel
- Hydraulics shaft: 1.4057 stainless steel
- Motor housing: 1.4301 stainless steel
- Motor shaft: 1.4305 stainless steel

Description/design
Submersible-motor pump for vertical or horizontal installation.

Hydraulics
Multistage submersible-motor pump with 4" NEMA connection and radial or semi-axial impellers with sectional construction. Integrated non-return valve. All parts in contact with the fluid are made of corrosion-free materials.

Motor
Corrosion-free single-phase or three-phase AC motor for direct starting. Sealed and hermetically cast motor, resin-impregnated, with enamel-insulated winding, self-lubricating bearing, with water-glycol filling.

Cooling
The motor is cooled by the fluid. The motor must always be operated in submerged state. The limit values for the max. fluid temperature and the minimum flow rate must not be exceeded. Vertical installation is possible optionally with or without cooling jacket. Cooling jacket is required for horizontal installation.

Pressure shroud
The pressure shroud is used for direct installation of the unit in the pipe system. Standard models are without mounted non-return valves. The maximum inlet pressure is 10 bar.

Options
- Hydraulics in 1.4401 stainless steel
- Three-phase AC motor in 1.4401 stainless steel
- 60 Hz version

Series description Wilo-Sub TWI 4-..-B

- Single-phase motor without soft starter, with integrated lightning and overload protection up to 1.1 kW

Scope of delivery
- Hydraulics + motor fully assembled
- 1.5/2.5 m connecting cable approved for potable water (cross-section: 4x1.5 mm^2)
- Single-phase version including switchbox with capacitor, thermal motor protection and On/Off switch
- Installation and operating instructions

Accessories
- Cooling jacket pipes
- Pressure shroud (for configured units)
- Diaphragm pressure vessel
- Cable kits for potable water and process water
- Switchgears

Configuration
- No suction mode is possible with these units!
- The unit must be fully immersed in water during operation.

General notes - ErP (ecological design-) directive
Minimum Efficiency Index (MEI) ≥ 0.1
- The benchmark for most efficient water pumps is MEI ≥ 0.70
- The efficiency of a pump with a trimmed impeller is usually lower than that of a pump with the full impeller diameter. The trimming of the impeller will adapt the pump to a fixed duty point, leading to reduced energy consumption. The minimum efficiency index (MEI) is based on the full impeller diameter.
- The operation of this water pump with variable duty points may be more efficient and economic when controlled, for example, by the use of a variable speed drive that matches the pump duty to the system.
- Information on benchmark efficiency is available at **www.europump.org/efficiencycharts**

Pump curves

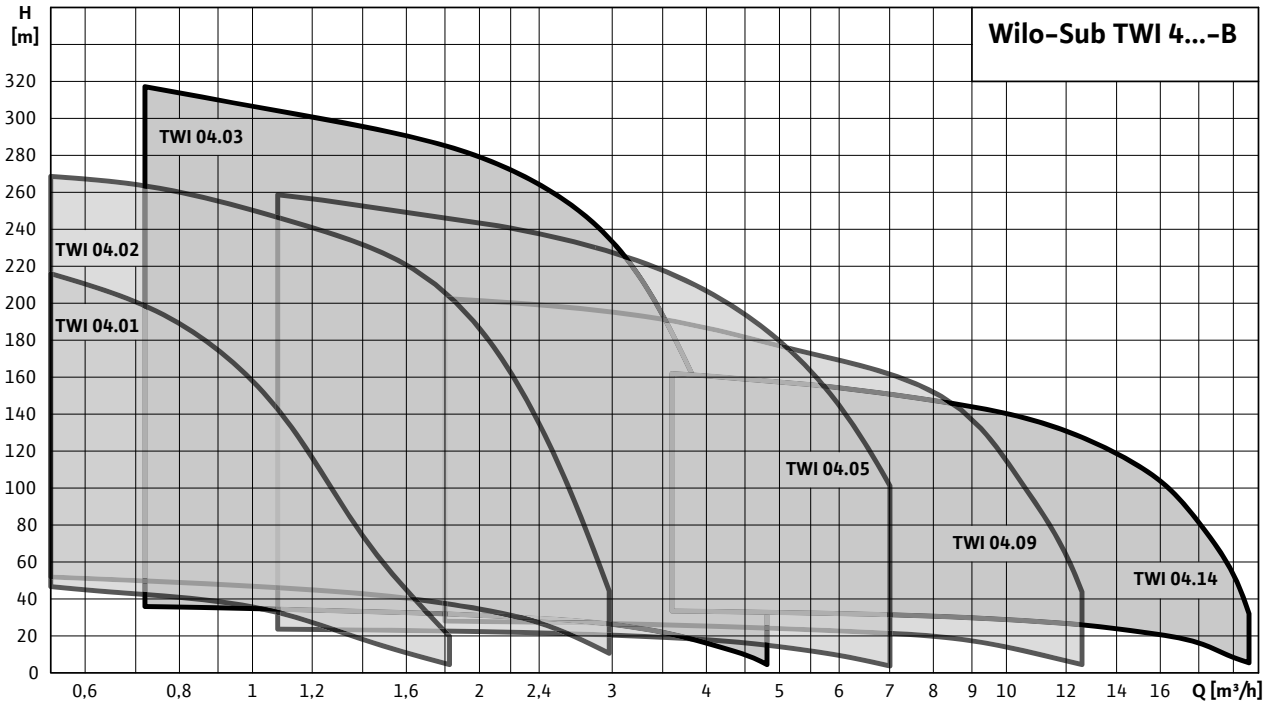

Wilo-Sub TWI 4.01..-B (1~230 V)

Pump curves Wilo-Sub TWI 4.01..-B (1~230 V)

Minimum Efficiency Index (MEI): ≥ 0.7

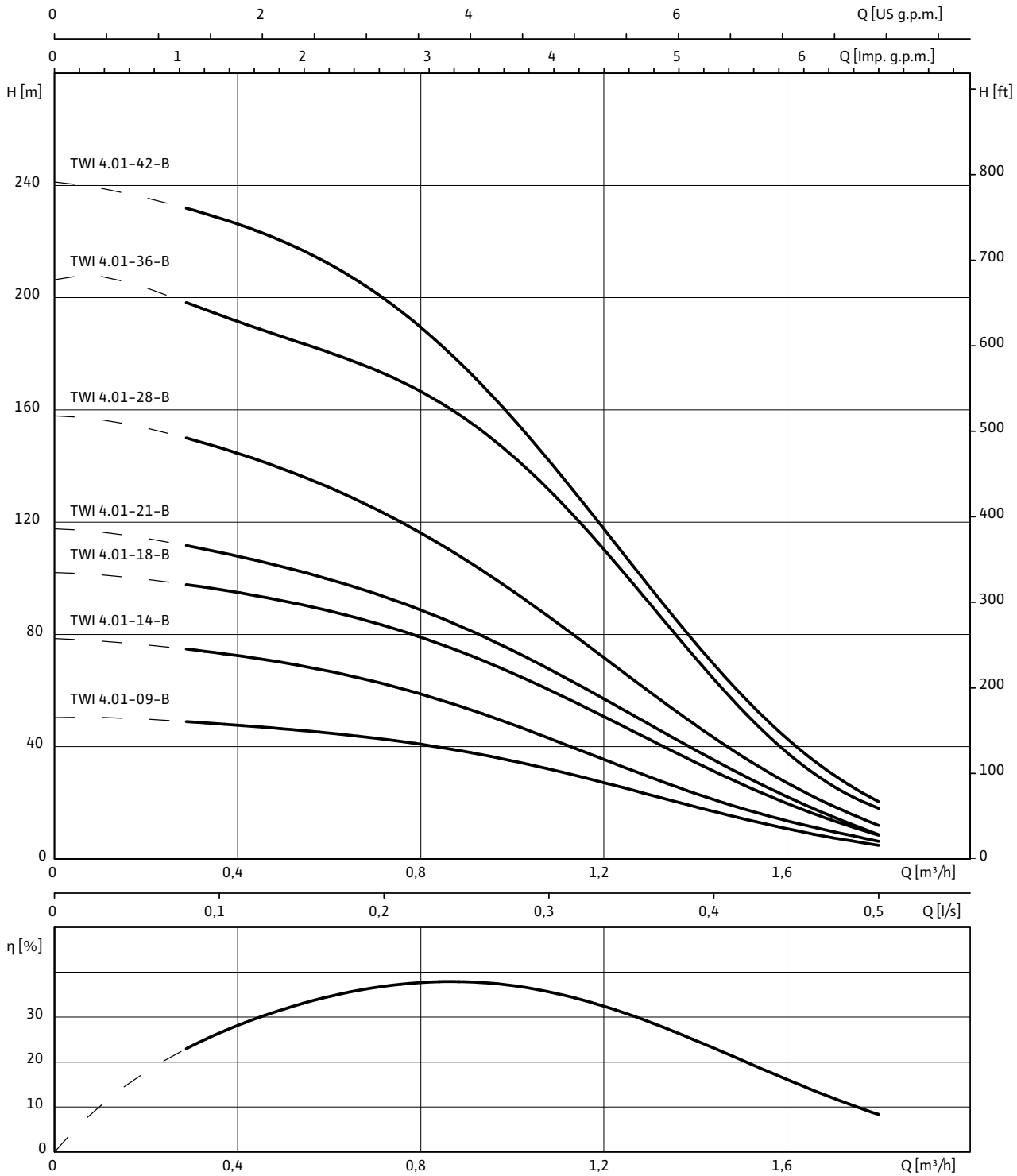

1~230 V, 50 Hz, p = 1 kg/dm^3, v = 1x10^{-6} m^2/s, ISO 9906 Annex A, η = pump efficiency

Wilo-Sub TWI 4.01..-B (1~230 V)

Motor data

Wilo-Sub...	Mains connection	Motor diameter	Nominal motor power	Nominal current	Length of connecting cable	Cable cross-section
		Ø	P_2	I_N		
		"	kW	A	m	mm^2
TWI 4.01-09-B	1~230 V, 50 Hz	4	0.37	3.2	2.5	4G1.5
TWI 4.01-14-B	1~230 V, 50 Hz	4	0.55	4.3	2.5	4G1.5
TWI 4.01-18-B	1~230 V, 50 Hz	4	0.55	4.3	2.5	4G1.5
TWI 4.01-21-B	1~230 V, 50 Hz	4	0.75	5.7	2.5	4G1.5
TWI 4.01-28-B	1~230 V, 50 Hz	4	1.1	8.6	2.5	4G1.5
TWI 4.01-36-B	1~230 V, 50 Hz	4	1.1	8.6	2.5	4G1.5
TWI 4.01-42-B	1~230 V, 50 Hz	4	1.5	10.6	2.5	4G1.5

Flange dimensions

Wilo-Sub...	Connection			Pressure class			Dimensions		
	DN1	*DN2*	*DN3*	PN_1	PN_2	PN_3	*D2*	*K*	*D*
	mm			bar			mm		
TWI 4.01...	Rp 1¼	–	–	10-40	–	–	–	–	–
TWI 4.01...	–	DN 50	DN 50	–	10-40	10	4x18	125	165

Information for order placements

Wilo-Sub...	Mains connection	🚚	Art no.	Art. no. for cooling jacket pipe	
				for vertical installation (B)	*for horizontal installation (D)*
TWI 4.01-09-B	1~230 V, 50 Hz	L	6043566	–	6037935
TWI 4.01-14-B	1~230 V, 50 Hz	L	6043567	4064430	6038901
TWI 4.01-18-B	1~230 V, 50 Hz	K	6043568	4064430	6038901
TWI 4.01-21-B	1~230 V, 50 Hz	K	6043569	4064430	6038901
TWI 4.01-28-B	1~230 V, 50 Hz	A	6043570	4064431	6037936
TWI 4.01-36-B	1~230 V, 50 Hz	A	6043571	4064431	6037936
TWI 4.01-42-B	1~230 V, 50 Hz	A	6043572	4064431	6037936

🚚= ready for delivery, L = stock article, C = order-specific production approx. 2 weeks, K = order-specific production approx. 4 weeks, A = delivery time on request

Wilo-Sub TWI 4.01..-B (1~230 V)

Dimension drawing Wilo-Sub TWI 4.01

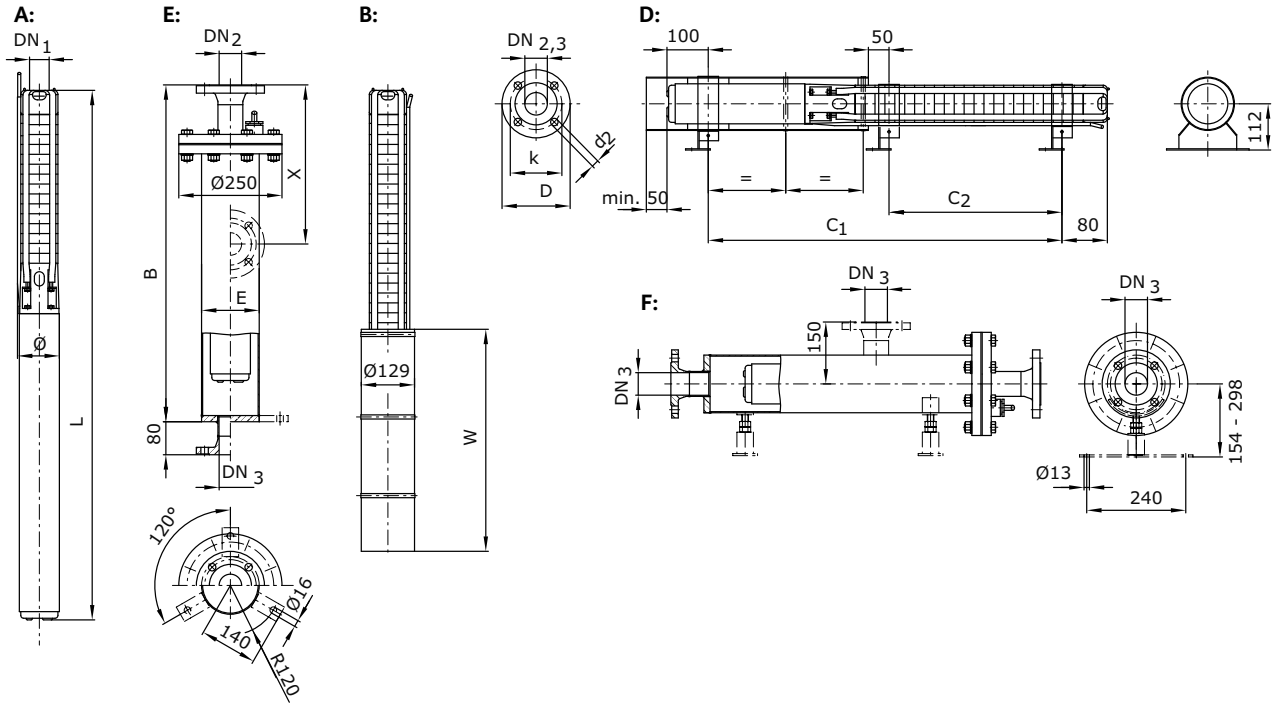

A = vertical, B = vertical with cooling jacket, D = horizontal with cooling jacket, E = vertical with pressure shroud, F = horizontal with pressure shroud

Dimensions, weights

Wilo-Sub...	Dimensions							Weight	Weight of unit	Installation
	B	*C1*	*C2*	*E*	*L*	*W*	*ø* [3]	*Jacket*[7]	*m*	
	mm							kg		
TWI 4.01-09-B	920	405	–	139.7	598	500	98	33	11.2	A, B, D, E, F
TWI 4.01-14-B	1220	539	208	139.7	732	500	98	36	13.3	A, B, D, E, F
TWI 4.01-18-B	1220	633	302	139.7	816	500	98	36	14	A, B, D, E, F
TWI 4.01-21-B	1220	714	355	139.7	907	500	98	36	15.8	A, B, D, E, F
TWI 4.01-28-B	1520	918	502	139.7	1082	750	98	38	18.3	A, B, D, E, F
TWI 4.01-36-B	1820	1121	705	139.7	1273	750	98	41	22	A, B, D, E, F
TWI 4.01-42-B	1820	1275	831	139.7	1428	750	98	41	24.8	A, B, D, E, F

[3] For power cable in accordance with I_N, max. ø for threaded connection, [7] Weight of pressure shroud

Wilo-Sub TWI 4.02..-B (1~230 V)

Pump curves Wilo-Sub TWI 4.02..-B (1~230 V)

Minimum Efficiency Index (MEI): ≥ 0.7

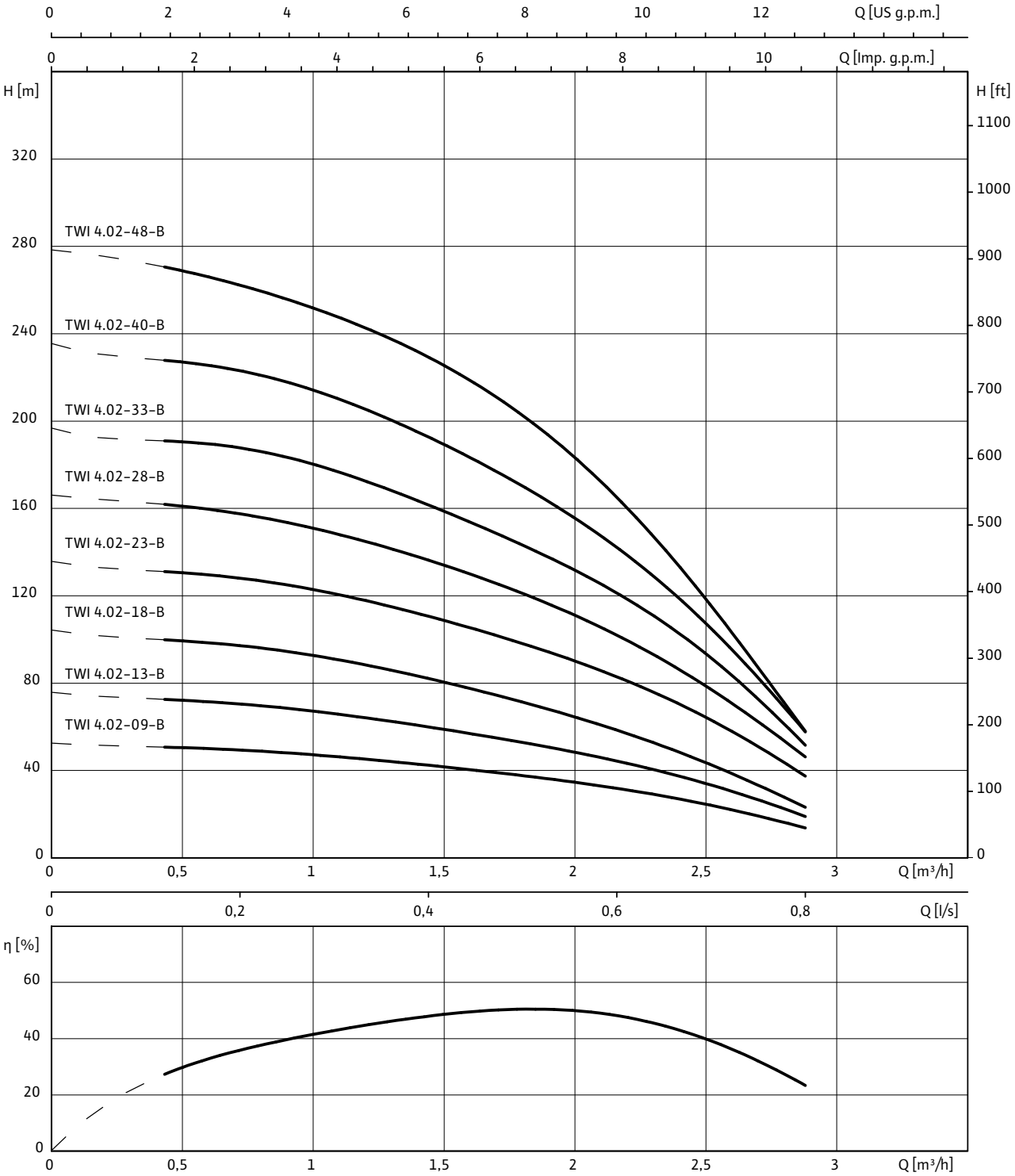

1~230 V, 50 Hz, p = 1 kg/dm^3, ν = 1x10^{-6} m^2/s, ISO 9906 Annex A, η = pump efficiency

Wilo-Sub TWI 4.02..-B (1~230 V)

Motor data

Wilo-Sub...	Mains connection	Motor diameter	Nominal motor power	Nominal current	Length of connecting cable	Cable cross-section
		Ø	*P_2*	*I_N*		
		"	kW	A	m	mm^2
TWI 4.02-09-B	1~230 V, 50 Hz	4	0.55	4.3	2.5	4G1.5
TWI 4.02-13-B	1~230 V, 50 Hz	4	0.75	5.7	2.5	4G1.5
TWI 4.02-18-B	1~230 V, 50 Hz	4	1.1	8.6	2.5	4G1.5
TWI 4.02-23-B	1~230 V, 50 Hz	4	1.1	8.6	2.5	4G1.5
TWI 4.02-28-B	1~230 V, 50 Hz	4	1.5	10.6	2.5	4G1.5
TWI 4.02-33-B	1~230 V, 50 Hz	4	1.5	10.6	2.5	4G1.5
TWI 4.02-40-B	1~230 V, 50 Hz	4	2.2	15.5	2.5	4G1.5
TWI 4.02-48-B	1~230 V, 50 Hz	4	2.2	15.5	2.5	4G1.5

Flange dimensions

Wilo-Sub...	Connection			Pressure class			Dimensions		
	DN1	*DN2*	*DN3*	*PN_1*	*PN_2*	*PN_3*	*D2*	*K*	*D*
	mm			bar			mm		
TWI 4.02...	Rp 1¼	–	–	10-40	–	–	–	–	–
TWI 4.02...	–	DN 50	DN 50	–	10-40	10	4x18	125	165

[3)] For power cable in accordance with I_N, max. ø for threaded connection, [7)] Weight of pressure shroud

Information for order placements

Wilo-Sub...	Mains connection	🚚	Art no.	Art. no. for cooling jacket pipe	
				for vertical installation (B)	*for horizontal installation (D)*
TWI 4.02-09-B	1~230 V, 50 Hz	L	6042682	4064430	6037935
TWI 4.02-13-B	1~230 V, 50 Hz	L	6042684	4064430	6037935
TWI 4.02-18-B	1~230 V, 50 Hz	L	6042685	4064431	6037936
TWI 4.02-23-B	1~230 V, 50 Hz	L	6042686	4064431	6037936
TWI 4.02-28-B	1~230 V, 50 Hz	K	6042687	4064431	6037936
TWI 4.02-33-B	1~230 V, 50 Hz	K	6042688	4064431	6037936
TWI 4.02-40-B	1~230 V, 50 Hz	A	6042693	4064431	6037936
TWI 4.02-48-B	1~230 V, 50 Hz	A	6042695	4064431	6037936

🚚= ready for delivery, L = stock article, C = order-specific production approx. 2 weeks, K = order-specific production approx. 4 weeks, A = delivery time on request

Wilo-Sub TWI 4.02..-B (1~230 V)

Dimension drawing Wilo-Sub TWI 4.02

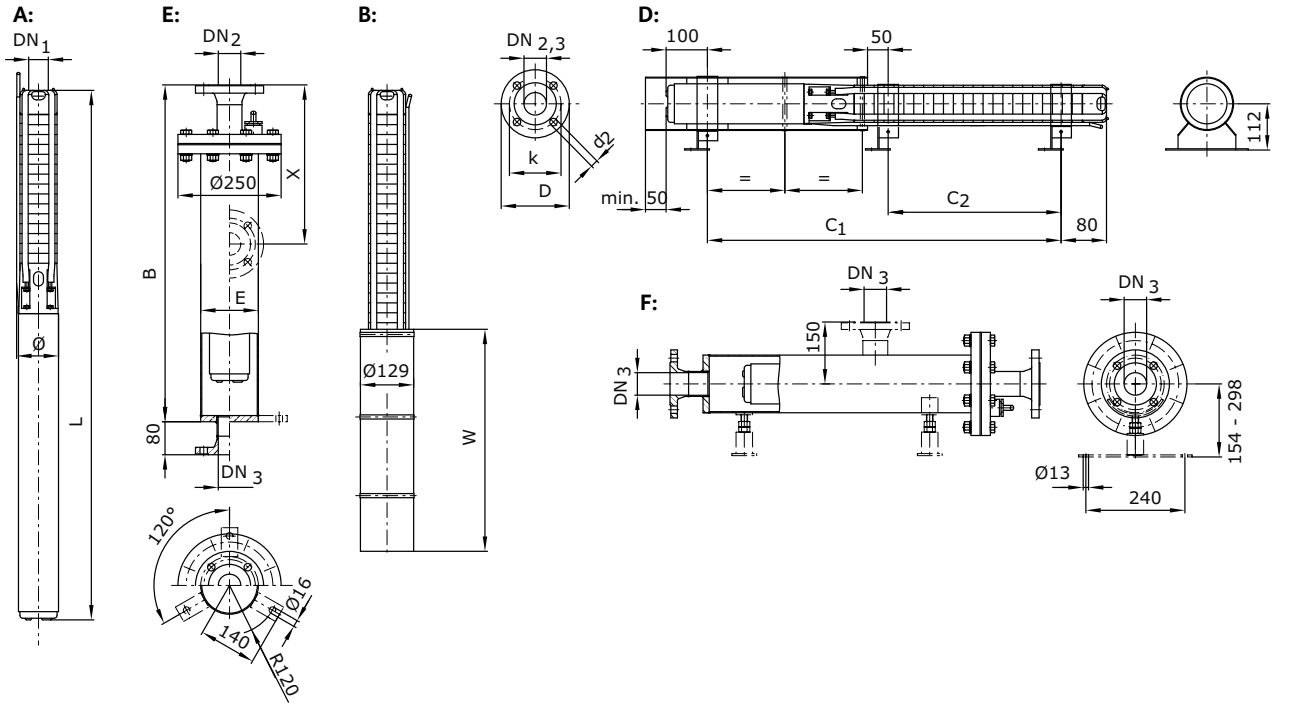

A = vertical, B = vertical with cooling jacket, D = horizontal with cooling jacket, E = vertical with pressure shroud, F = horizontal with pressure shroud

Dimensions, weights

Wilo-Sub...	Dimensions							Weight	Weight of unit	Installation
	B	*C1*	*C2*	*E*	*L*	*W*	*ø* [3]	*Jacket*[7]	*m*	
	mm							kg		
TWI 4.02-09-B	920	434	–	139.7	627	500	98	33	12.6	A, B, D, E, F
TWI 4.02-13-B	1220	546	–	139.7	739	500	98	36	14.6	A, B, D, E, F
TWI 4.02-18-B	1220	708	292	139.7	872	750	98	36	16.8	A, B, D, E, F
TWI 4.02-23-B	1520	813	397	139.7	977	750	98	38	17.8	A, B, D, E, F
TWI 4.02-28-B	1520	946	502	139.7	1111	750	98	38	20.1	A, B, D, E, F
TWI 4.02-33-B	1520	1051	607	139.7	1239	750	98	38	23.2	A, B, D, E, F
TWI 4.02-40-B	1820	1309	789	139.7	1490	750	98	41	29.5	A, B, D, E, F
TWI 4.02-48-B	2120	1477	957	139.7	1658	750	98	44	31.5	A, B, D, E, F

[3] For power cable in accordance with I_N, max. ø for threaded connection, [7] Weight of pressure shroud

Wilo-Sub TWI 4.03..-B (1~230 V)

Pump curves Wilo-Sub TWI 4.03..-B (1~230 V)

Minimum Efficiency Index (MEI): ≥ 0.7

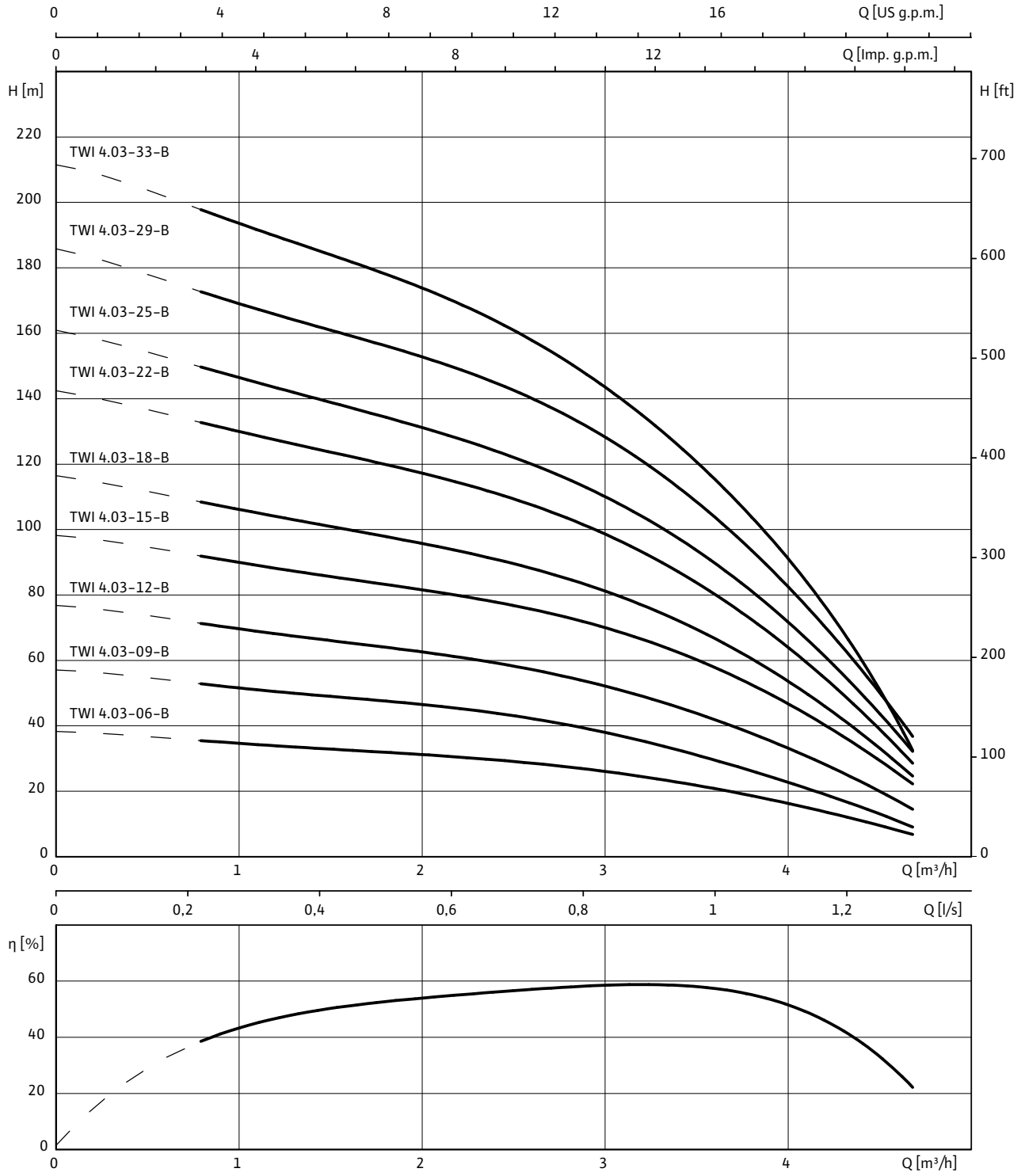

1~230 V, 50 Hz, p = 1 kg/dm^3, v = 1x10^{-6} m^2/s, ISO 9906 Annex A, η = pump efficiency

Wilo-Sub TWI 4.03..-B (1~230 V)

Motor data

Wilo-Sub...	Mains connection	Motor diameter	Nominal motor power	Nominal current	Length of connecting cable	Cable cross-section
		Ø	P_2	I_N		
		"	kW	A	m	mm^2
TWI 4.03-06-B	1~230 V, 50 Hz	4	0.55	4.3	2.5	4G1.5
TWI 4.03-09-B	1~230 V, 50 Hz	4	0.75	5.7	2.5	4G1.5
TWI 4.03-12-B	1~230 V, 50 Hz	4	1.1	8.6	2.5	4G1.5
TWI 4.03-15-B	1~230 V, 50 Hz	4	1.1	8.6	2.5	4G1.5
TWI 4.03-18-B	1~230 V, 50 Hz	4	1.5	10.6	2.5	4G1.5
TWI 4.03-22-B	1~230 V, 50 Hz	4	1.5	10.6	2.5	4G1.5
TWI 4.03-25-B	1~230 V, 50 Hz	4	2.2	15.5	2.5	4G1.5
TWI 4.03-29-B	1~230 V, 50 Hz	4	2.2	15.5	2.5	4G1.5
TWI 4.03-33-B	1~230 V, 50 Hz	4	2.2	15.5	2.5	4G1.5

Flange dimensions

Wilo-Sub...	Connection			Pressure class			Dimensions		
	DN1	*DN2*	*DN3*	PN_1	PN_2	PN_3	*D2*	*K*	*D*
	mm			bar			mm		
TWI 4.03...	Rp 1¼	–	–	10-40	–	–	–	–	–
TWI 4.03...	–	DN 50	DN 50	–	10-40	10	4x18	125	165

[3)] For power cable in accordance with I_N, max. ø for threaded connection, [7)] Weight of pressure shroud

Information for order placements

Wilo-Sub...	Mains connection	🚚	Art no.	Art. no. for cooling jacket pipe	
				for vertical installation (B)	*for horizontal installation (D)*
TWI 4.03-06-B	1~230 V, 50 Hz	L	6042696	4064430	6037935
TWI 4.03-09-B	1~230 V, 50 Hz	L	6042697	4064430	6037935
TWI 4.03-12-B	1~230 V, 50 Hz	L	6042698	4064431	6037937
TWI 4.03-15-B	1~230 V, 50 Hz	L	6042699	4064431	6037936
TWI 4.03-18-B	1~230 V, 50 Hz	L	6042900	4064431	6037936
TWI 4.03-22-B	1~230 V, 50 Hz	L	6042901	4064431	6037936
TWI 4.03-25-B	1~230 V, 50 Hz	L	6042902	4064431	6037936
TWI 4.03-29-B	1~230 V, 50 Hz	K	6042903	4064431	6037936
TWI 4.03-33-B	1~230 V, 50 Hz	A	6042904	4064431	6037936

🚚= ready for delivery, L = stock article, C = order-specific production approx. 2 weeks, K = order-specific production approx. 4 weeks, A = delivery time on request

Wilo-Sub TWI 4.03..-B (1~230 V)

Dimension drawing Wilo-Sub TWI 4.03

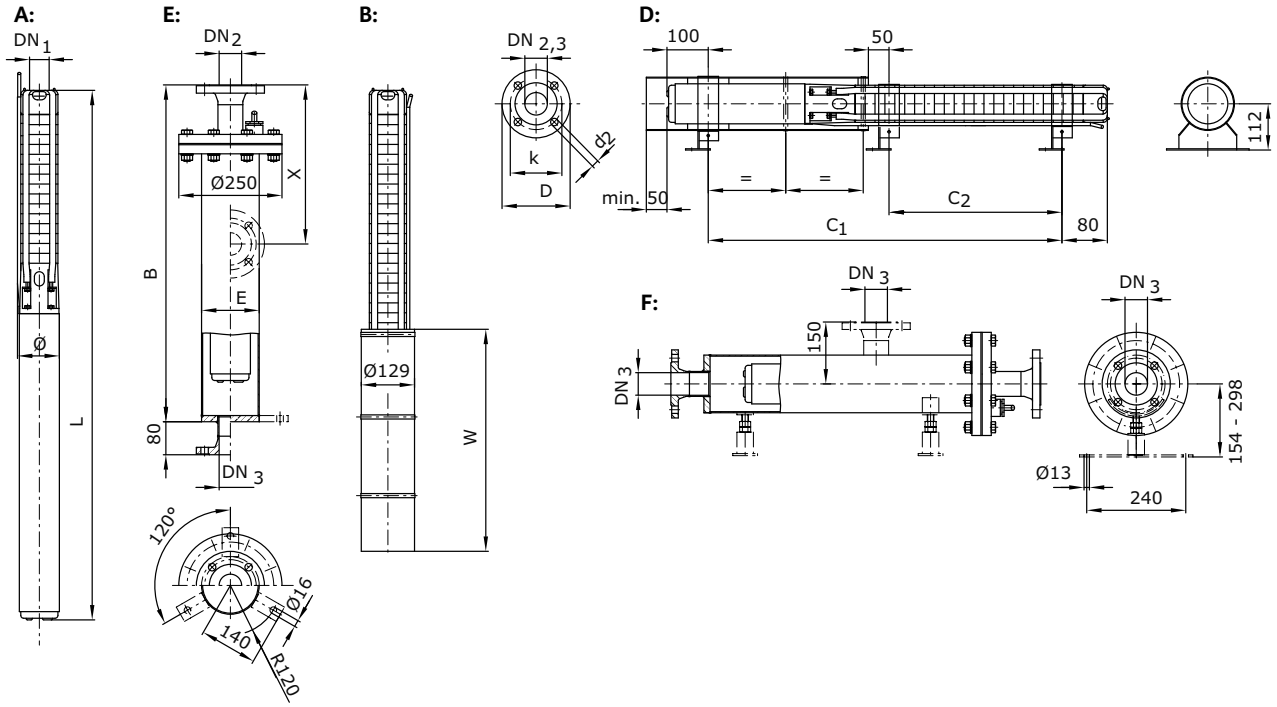

A = vertical, B = vertical with cooling jacket, D = horizontal with cooling jacket, E = vertical with pressure shroud, F = horizontal with pressure shroud

Dimensions, weights

Wilo-Sub...	Dimensions							Weight	Weight of unit	Installation
	B	*C1*	*C2*	*E*	*L*	*W*	*ø* [3]	*Jacket*[7]	*m*	
	mm							kg		
TWI 4.03-06-B	920	371	–	139.7	564	500	98	33	12	A, B, D, E, F
TWI 4.03-09-B	920	462	–	139.7	655	500	98	33	13.8	A, B, D, E, F
TWI 4.03-12-B	1220	582	–	139.7	746	750	98	36	15.7	A, B, D, E, F
TWI 4.03-15-B	1220	645	229	139.7	809	750	98	36	16.3	A, B, D, E, F
TWI 4.03-18-B	1220	736	292	139.7	901	750	98	36	18.2	A, B, D, E, F
TWI 4.03-22-B	1520	820	376	139.7	985	750	98	38	19	A, B, D, E, F
TWI 4.03-25-B	1520	959	439	139.7	1152	750	98	38	24.1	A, B, D, E, F
TWI 4.03-29-B	1520	1043	523	139.7	1236	750	98	38	24.8	A, B, D, E, F
TWI 4.03-33-B	1820	1127	607	139.7	1343	750	98	41	27.7	A, B, D, E, F

[3] For power cable in accordance with I_N, max. ø for threaded connection, [7] Weight of pressure shroud

Wilo-Sub TWI 4.05..-B (1~230 V)

Pump curves Wilo-Sub TWI 4.05..-B (1~230 V)

Minimum Efficiency Index (MEI): ≥ 0.4

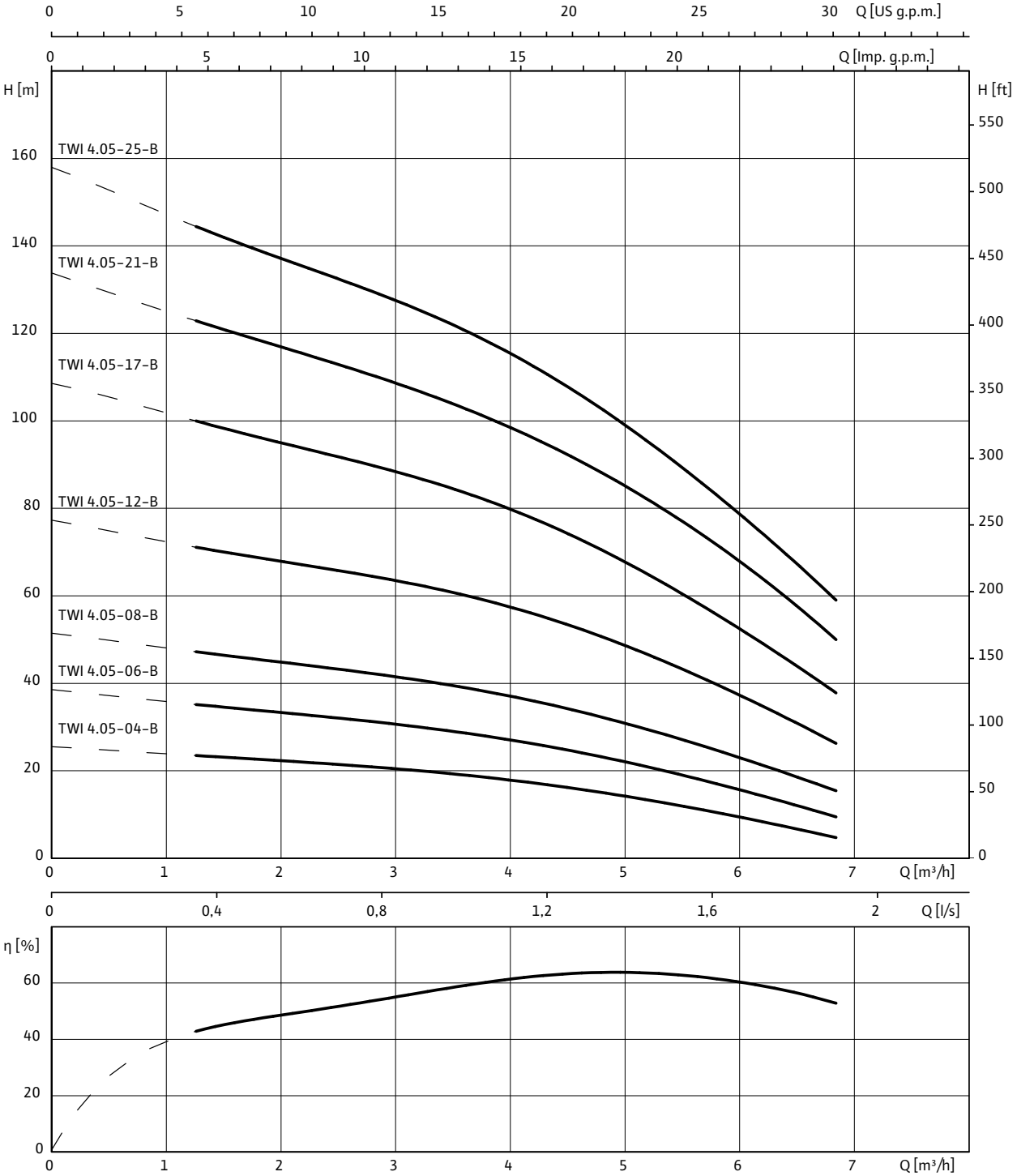

1~230 V, 50 Hz, p = 1 kg/dm^3, ν = 1x10^{-6} m^2/s, ISO 9906 Annex A, η = pump efficiency

Wilo-Sub TWI 4.05..-B (1~230 V)

Motor data

Wilo-Sub...	Mains connection	Motor diameter	Nominal motor power	Nominal current	Length of connecting cable	Cable cross-section
		Ø	P_2	I_N		
		"	kW	A	m	mm^2
TWI 4.05-04-B	1~230 V, 50 Hz	4	0.55	4.3	2.5	4G1.5
TWI 4.05-06-B	1~230 V, 50 Hz	4	0.55	4.3	2.5	4G1.5
TWI 4.05-08-B	1~230 V, 50 Hz	4	0.75	5.7	2.5	4G1.5
TWI 4.05-12-B	1~230 V, 50 Hz	4	1.5	10.6	2.5	4G1.5
TWI 4.05-17-B	1~230 V, 50 Hz	4	2.2	15.5	2.5	4G1.5
TWI 4.05-21-B	1~230 V, 50 Hz	4	2.2	15.5	2.5	4G1.5
TWI 4.05-25-B	1~230 V, 50 Hz	4	2.2	15.5	2.5	4G1.5

Flange dimensions

Wilo-Sub...	Connection			Pressure class			Dimensions		
	DN1	*DN2*	*DN3*	PN_1	PN_2	PN_3	*D2*	*K*	*D*
	mm			bar			mm		
TWI 4.05...	Rp 1½	–	–	10-40	–	–	–	–	–
TWI 4.05...	–	DN 50	DN 50	–	10-40	10	4x18	125	165

Information for order placements

Wilo-Sub...	Mains connection	🚚	Art no.	Art. no. for cooling jacket pipe	
				for vertical installation (B)	*for horizontal installation (D)*
TWI 4.05-04-B	1~230 V, 50 Hz	L	6042905	4064430	6037935
TWI 4.05-06-B	1~230 V, 50 Hz	L	6043573	4064430	6037935
TWI 4.05-08-B	1~230 V, 50 Hz	L	6042906	4064430	6037935
TWI 4.05-12-B	1~230 V, 50 Hz	L	6043574	4064431	6037937
TWI 4.05-17-B	1~230 V, 50 Hz	L	6042907	4064431	6037937
TWI 4.05-21-B	1~230 V, 50 Hz	L	6042908	4064431	6037936
TWI 4.05-25-B	1~230 V, 50 Hz	L	6042909	4064431	6037936

🚚= ready for delivery, L = stock article, C = order-specific production approx. 2 weeks, K = order-specific production approx. 4 weeks, A = delivery time on request

Wilo-Sub TWI 4.05..-B (1~230 V)

Dimension drawing Wilo-Sub TWI 4.05

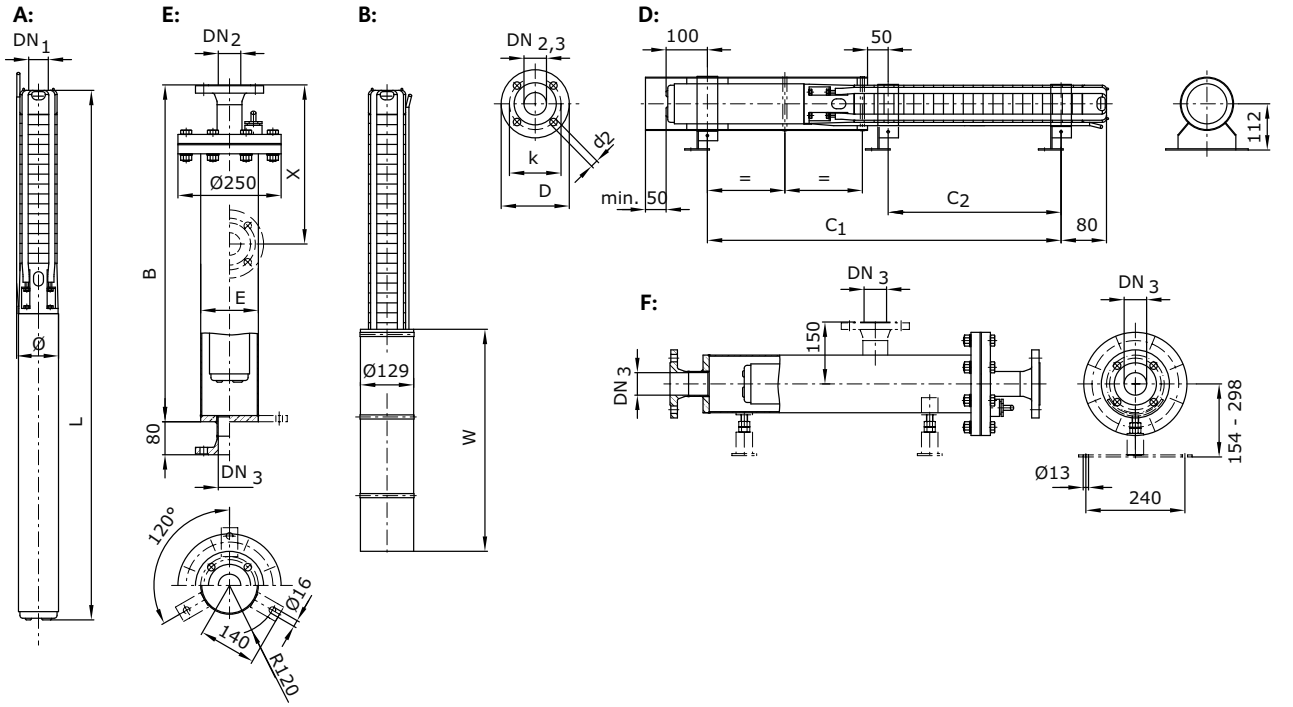

A = vertical, B = vertical with cooling jacket, D = horizontal with cooling jacket, E = vertical with pressure shroud, F = horizontal with pressure shroud

Dimensions, weights

Wilo-Sub...	Dimensions							Weight	Weight of unit	Installation
	B	*C1*	*C2*	*E*	*L*	*W*	*ø* [3]	*Jacket*[7]	*m*	
	mm							kg		
TWI 4.05-04-B	920	329	–	139.7	522	500	98	33	11.6	A, B, D, E, F
TWI 4.05-06-B	920	371	–	139.7	564	500	98	33	12	A, B, D, E, F
TWI 4.05-08-B	920	441	–	139.7	634	500	98	33	13.6	A, B, D, E, F
TWI 4.05-12-B	1220	610	–	139.7	775	750	98	36	17.1	A, B, D, E, F
TWI 4.05-17-B	1220	791	–	139.7	984	750	98	36	22.5	A, B, D, E, F
TWI 4.05-21-B	1520	875	355	139.7	1068	750	98	38	23.3	A, B, D, E, F
TWI 4.05-25-B	1520	959	439	139.7	1152	750	98	38	24	A, B, D, E, F

[3] For power cable in accordance with I_N, max. ø for threaded connection, [7] Weight of pressure shroud

Wilo-Sub TWI 4.09..-B (1~230 V)

Pump curves Wilo-Sub TWI 4.09..-B (1~230 V)

Minimum Efficiency Index (MEI): ≥ 0.4

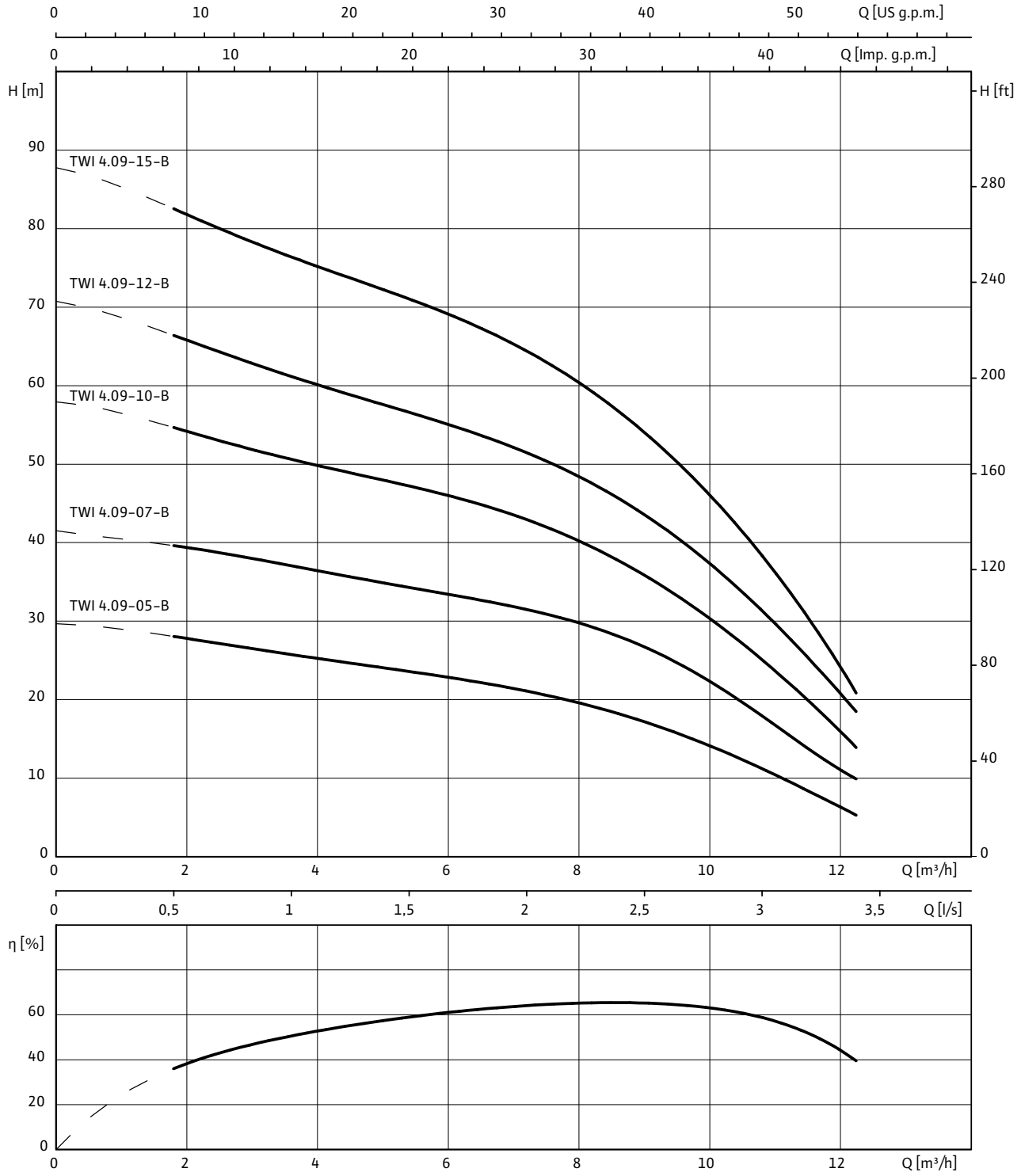

1~230 V, 50 Hz, p = 1 kg/dm^3, v = 1x10^{-6} m^2/s, ISO 9906 Annex A, η = pump efficiency

Wilo-Sub TWI 4.09..-B (1~230 V)

Motor data

Wilo-Sub...	Mains connection	Motor diameter	Nominal motor power	Nominal current	Length of connecting cable	Cable cross-section
		Ø	P_2	I_N		
		"	kW	A	m	mm^2
TWI 4.09-05-B	1~230 V, 50 Hz	4	1.1	8.6	2.5	4G1.5
TWI 4.09-07-B	1~230 V, 50 Hz	4	1.1	8.6	2.5	4G1.5
TWI 4.09-10-B	1~230 V, 50 Hz	4	1.5	10.6	2.5	4G1.5
TWI 4.09-12-B	1~230 V, 50 Hz	4	2.2	15.5	2.5	4G1.5
TWI 4.09-15-B	1~230 V, 50 Hz	4	2.2	15.5	2.5	4G1.5

Flange dimensions

Wilo-Sub...	Connection			Pressure class			Dimensions		
	DN1	*DN2*	*DN3*	PN_1	PN_2	PN_3	*D2*	*K*	*D*
	mm			bar			mm		
TWI 4.09...	Rp 2	–	–	10-40	–	–	–	–	–
TWI 4.09...	–	DN 50	DN 50	–	10-40	10	4x18	125	165

3) For power cable in accordance with I_N, max. ø for threaded connection, 7) Weight of pressure shroud

Information for order placements

Wilo-Sub...	Mains connection	🚚	Art no.	Art. no. for cooling jacket pipe	
				for vertical installation (B)	*for horizontal installation (D)*
TWI 4.09-05-B	1~230 V, 50 Hz	L	6042910	4064431	6037937
TWI 4.09-07-B	1~230 V, 50 Hz	L	6042911	4064431	6037937
TWI 4.09-10-B	1~230 V, 50 Hz	L	6042912	4064431	6037936
TWI 4.09-12-B	1~230 V, 50 Hz	L	6043575	4064431	6037936
TWI 4.09-15-B	1~230 V, 50 Hz	L	6042913	4064431	6037936

🚚= ready for delivery, L = stock article, C = order-specific production approx. 2 weeks, K = order-specific production approx. 4 weeks, A = delivery time on request

Wilo-Sub TWI 4.09..-B (1~230 V)

Dimension drawing Wilo-Sub TWI 4.09

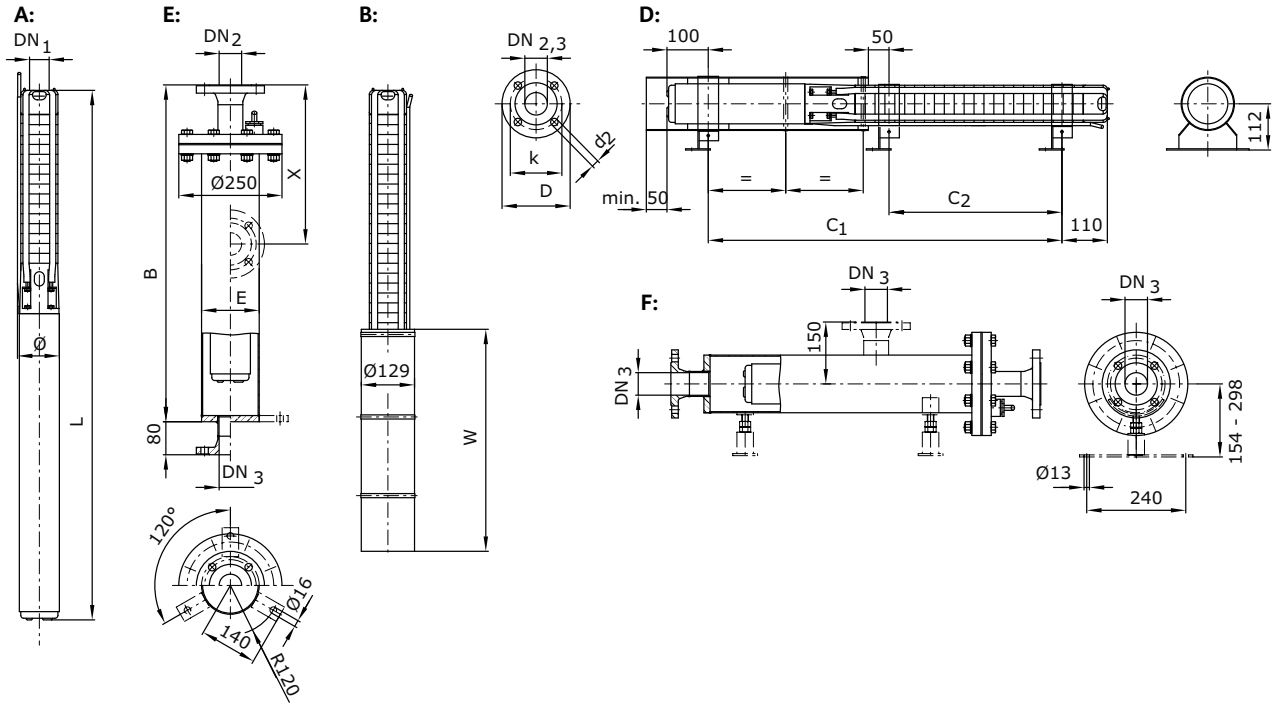

A = vertical, B = vertical with cooling jacket, D = horizontal with cooling jacket, E = vertical with pressure shroud, F = horizontal with pressure shroud

Dimensions, weights

Wilo-Sub...	Dimensions							Weight	Weight of unit	Installation
	B	*C1*	*C2*	*E*	*L*	*W*	*ø* [3]	*Jacket*[7]	*m*	
	mm							kg		
TWI 4.09-05-B	1220	553	–	139.7	742	750	98	36	16.4	A, B, D, E, F
TWI 4.09-07-B	1220	637	–	139.7	823	750	98	36	17.4	A, B, D, E, F
TWI 4.09-10-B	1520	791	292	139.7	978	750	98	38	20.3	A, B, D, E, F
TWI 4.09-12-B	1520	951	376	139.7	1166	750	98	38	25.8	A, B, D, E, F
TWI 4.09-15-B	1820	1077	502	139.7	1292	750	98	41	27.3	A, B, D, E, F

[3] For power cable in accordance with I_N, max. ø for threaded connection, [7] Weight of pressure shroud

Wilo-Sub TWI 4.14..-B (1~230 V)

Pump curves Wilo-Sub TWI 4.14..-B (1~230 V)

Minimum Efficiency Index (MEI): ≥ 0.1

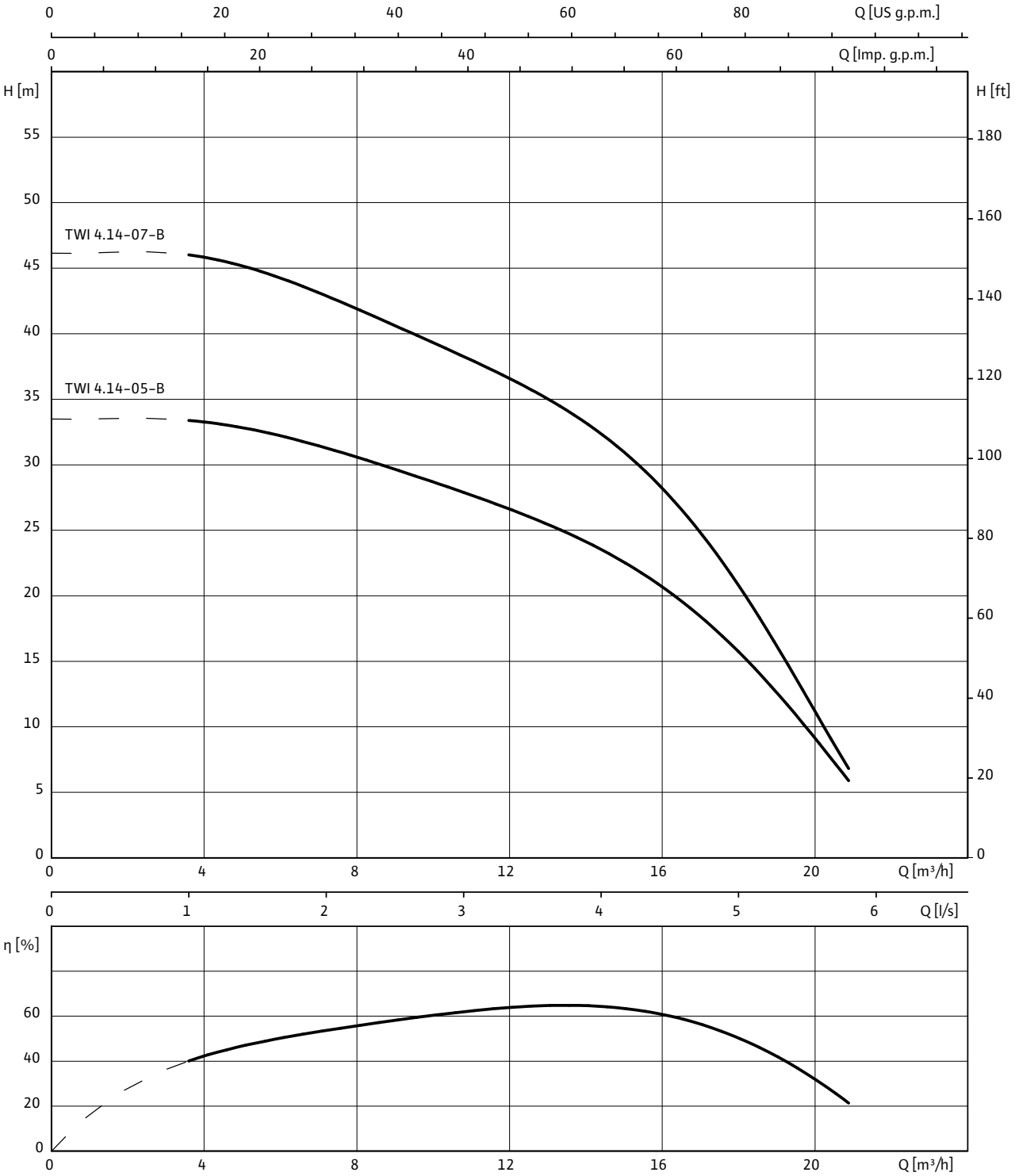

1~230 V, 50 Hz, p = 1 kg/dm^3, ν = 1x10^{-6} m^2/s, ISO 9906 Annex A, η = pump efficiency

Wilo-Sub TWI 4.14..-B (1~230 V)

Motor data						
Wilo-Sub...	**Mains connection**	**Motor diameter**	**Nominal motor power**	**Nominal current**	**Length of connecting cable**	**Cable cross-section**
		Ø	P_2	I_N		
		"	kW	A	m	mm^2
TWI 4.14-05-B	1~230 V, 50 Hz	4	2.2	15.5	2.5	4G1.5
TWI 4.14-07-B	1~230 V, 50 Hz	4	2.2	15.5	2.5	4G1.5

Flange dimensions									
Wilo-Sub...	**Connection**			**Pressure class**			**Dimensions**		
	DN1	*DN2*	*DN3*	PN_1	PN_2	PN_3	*D2*	*K*	*D*
	mm			bar			mm		
TWI 4.14...	Rp 2	–	–	10-40	–	–	–	–	–
TWI 4.14...	–	DN 50	DN 50	–	10-40	10	4x18	125	165

Information for order placements					
Wilo-Sub...	**Mains connection**	🚚	**Art no.**	**Art. no. for cooling jacket pipe**	
				for vertical installation (B)	*for horizontal installation (D)*
TWI 4.14-05-B	1~230 V, 50 Hz	L	6042914	4064431	6037937
TWI 4.14-07-B	1~230 V, 50 Hz	L	6042915	4064431	6037937

🚚= ready for delivery, L = stock article, C = order-specific production approx. 2 weeks, K = order-specific production approx. 4 weeks, A = delivery time on request

Wilo-Sub TWI 4.14..-B (1~230 V)

Dimension drawing Wilo-Sub TWI 4.14

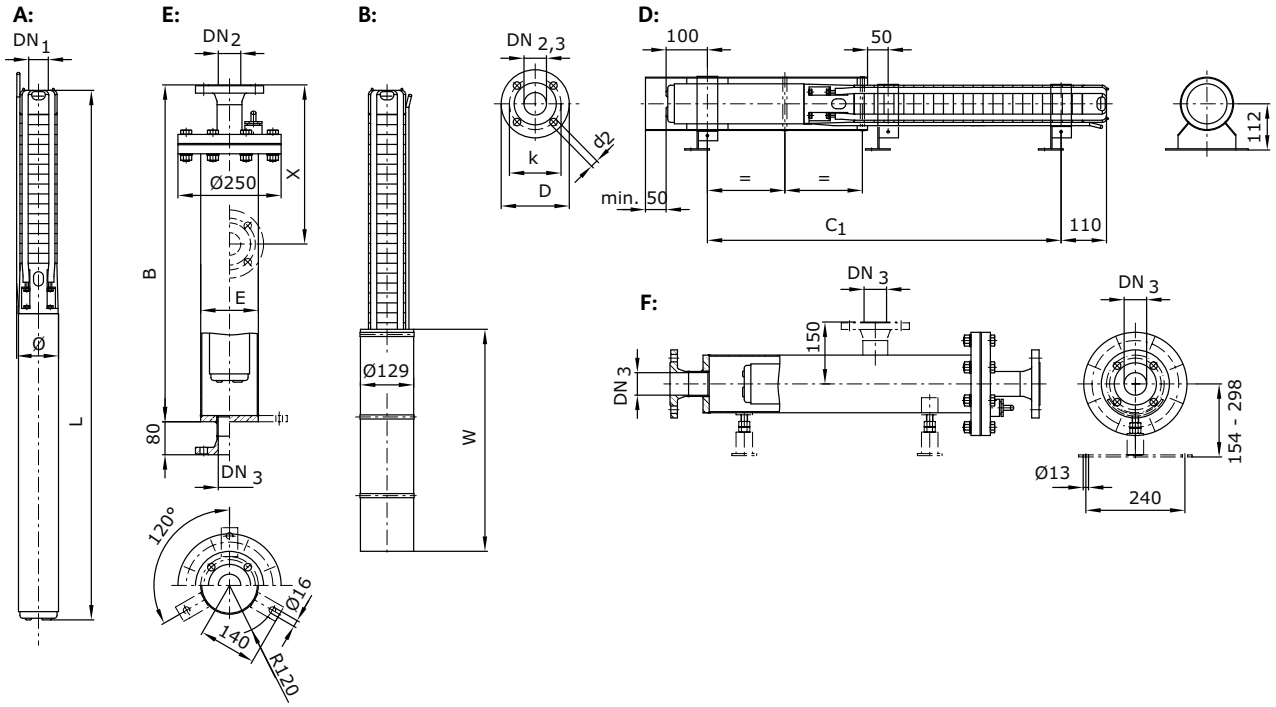

A = vertical, B = vertical with cooling jacket, D = horizontal with cooling jacket, E = vertical with pressure shroud, F = horizontal with pressure shroud

Dimensions, weights

Wilo-Sub...	Dimensions						Weight	Weight of unit	Installation
	B	*C1*	*E*	*L*	*W*	*ø* [3]	*Jacket*[7]	*m*	
	mm						kg		
TWI 4.14-05-B	1220	756	139.7	965	750	98	36	23	A, B, D, E, F
TWI 4.14-07-B	1520	886	139.7	1095	750	98	38	24.3	A, B, D, E, F

[3] For power cable in accordance with I_N, max. ø for threaded connection, [7] Weight of pressure shroud

Wilo-Sub TWI 4.01..-B

Pump curves Wilo-Sub TWI 4.01..-B

Minimum Efficiency Index (MEI): ≥ 0.7

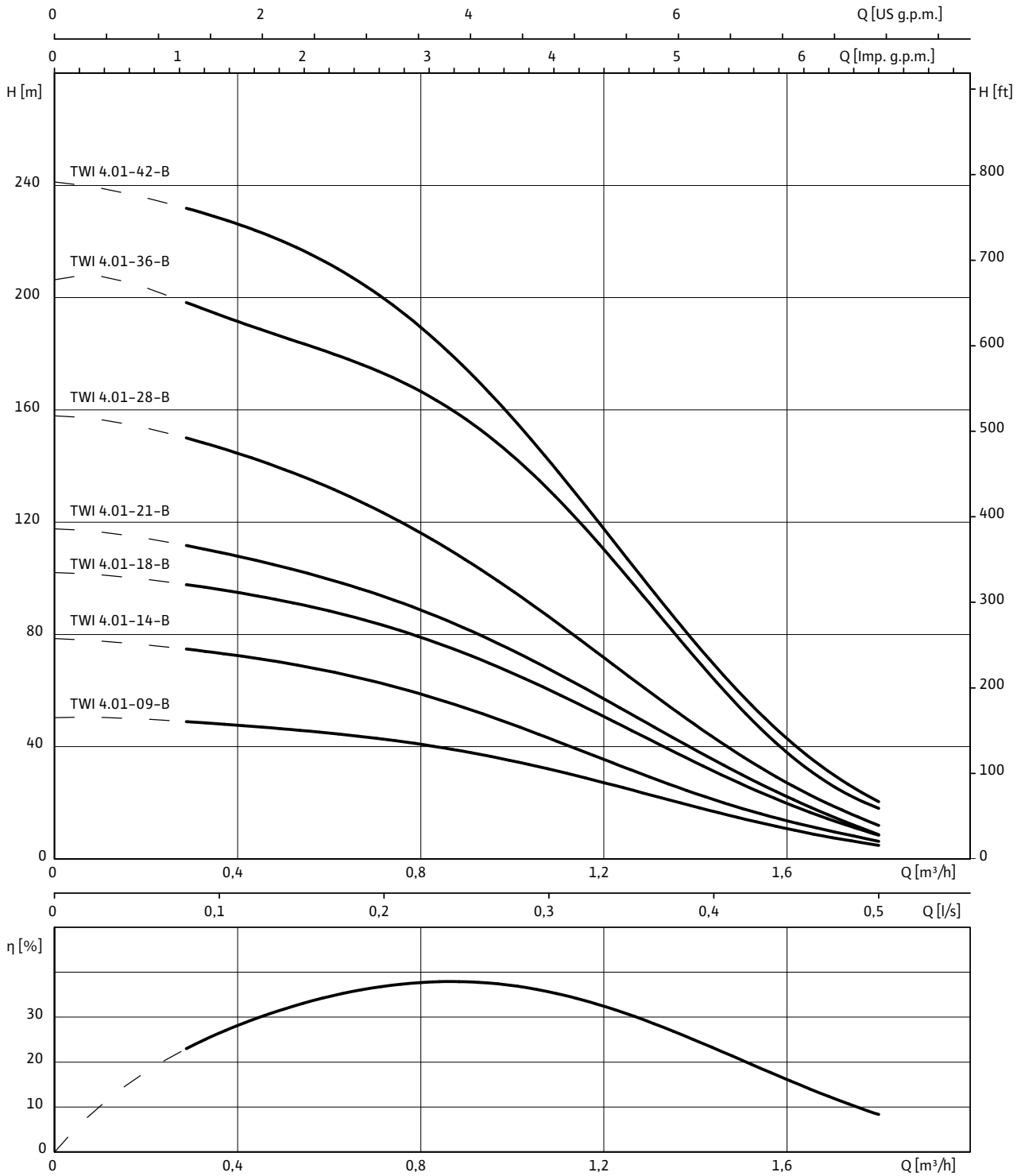

3~400 V, 50 Hz, p = 1 kg/dm^3, v = 1x10^{-6} m^2/s, ISO 9906 Annex A, η = pump efficiency

Wilo-Sub TWI 4.01..-B

Motor data

Wilo-Sub...	Mains connection	Motor diameter	Nominal motor power	Nominal current	Length of connecting cable	Cable cross-section
		Ø	P_2	I_N		
		"	kW	A	m	mm^2
TWI 4.01-09-B	3~400 V, 50 Hz	4	0.37	1.1	2.5	4G1.5
TWI 4.01-14-B	3~400 V, 50 Hz	4	0.55	1.6	2.5	4G1.5
TWI 4.01-18-B	3~400 V, 50 Hz	4	0.55	1.6	2.5	4G1.5
TWI 4.01-21-B	3~400 V, 50 Hz	4	0.75	2.1	2.5	4G1.5
TWI 4.01-28-B	3~400 V, 50 Hz	4	1.1	3	2.5	4G1.5
TWI 4.01-36-B	3~400 V, 50 Hz	4	1.1	3	2.5	4G1.5
TWI 4.01-42-B	3~400 V, 50 Hz	4	1.5	4	2.5	4G1.5

Flange dimensions

Wilo-Sub...	Connection			Pressure class			Dimensions		
	DN1	*DN2*	*DN3*	PN_1	PN_2	PN_3	*D2*	*K*	*D*
	mm			bar			mm		
TWI 4.01...	Rp 1¼	–	–	10-40	–	–	–	–	–
TWI 4.01...	–	DN 50	DN 50	–	10-40	10	4x18	125	165

[3)] For power cable in accordance with I_N, max. ø for threaded connection, [7)] Weight of pressure shroud

Information for order placements

Wilo-Sub...	Mains connection	🚚	Art no.	Art. no. for cooling jacket pipe	
				for vertical installation (B)	*for horizontal installation (D)*
TWI 4.01-09-B	3~400 V, 50 Hz	L	6043546	4064430	6037935
TWI 4.01-14-B	3~400 V, 50 Hz	L	6043547	4064430	6038901
TWI 4.01-18-B	3~400 V, 50 Hz	K	6043548	4064430	6038901
TWI 4.01-21-B	3~400 V, 50 Hz	K	6043549	4064430	6038901
TWI 4.01-28-B	3~400 V, 50 Hz	A	6043550	4064430	6038901
TWI 4.01-36-B	3~400 V, 50 Hz	A	6043551	4064430	6038901
TWI 4.01-42-B	3~400 V, 50 Hz	A	6043552	4064430	6038901

🚚= ready for delivery, L = stock article, C = order-specific production approx. 2 weeks, K = order-specific production approx. 4 weeks, A = delivery time on request

Wilo-Sub TWI 4.01..-B

Dimension drawing Wilo-Sub TWI 4.01

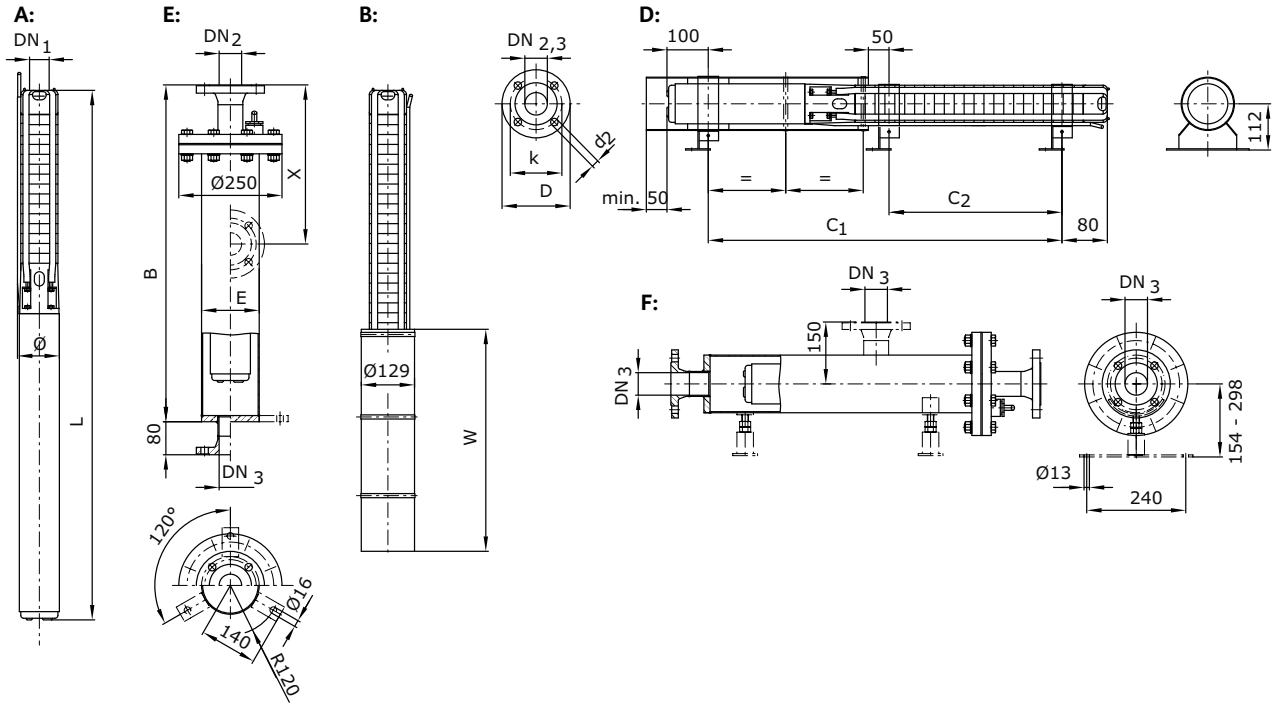

A = vertical, B = vertical with cooling jacket, D = horizontal with cooling jacket, E = vertical with pressure shroud, F = horizontal with pressure shroud

Dimensions, weights

Wilo-Sub...	Dimensions							Weight	Weight of unit	Installation
	B	*C1*	*C2*	*E*	*L*	*W*	*ø* [3]	*Jacket*[7]	*m*	
	mm							kg		
TWI 4.01-09-B	920	393	–	139.7	586	500	98	33	10.8	A, B, D, E, F
TWI 4.01-14-B	1220	539	230	139.7	710	500	98	36	12.5	A, B, D, E, F
TWI 4.01-18-B	1220	633	324	139.7	794	500	98	36	13.2	A, B, D, E, F
TWI 4.01-21-B	1220	692	355	139.7	885	500	98	36	15	A, B, D, E, F
TWI 4.01-28-B	1520	867	502	139.7	1060	500	98	38	17.6	A, B, D, E, F
TWI 4.01-36-B	1520	1070	705	139.7	1251	500	98	38	21.3	A, B, D, E, F
TWI 4.01-42-B	1820	1225	831	139.7	1406	500	98	41	23.9	A, B, D, E, F

[3] For power cable in accordance with I_N, max. ø for threaded connection, [7] Weight of pressure shroud

Wilo-Sub TWI 4.02..-B

Pump curves Wilo-Sub TWI 4.02..-B

Minimum Efficiency Index (MEI): ≥ 0.7

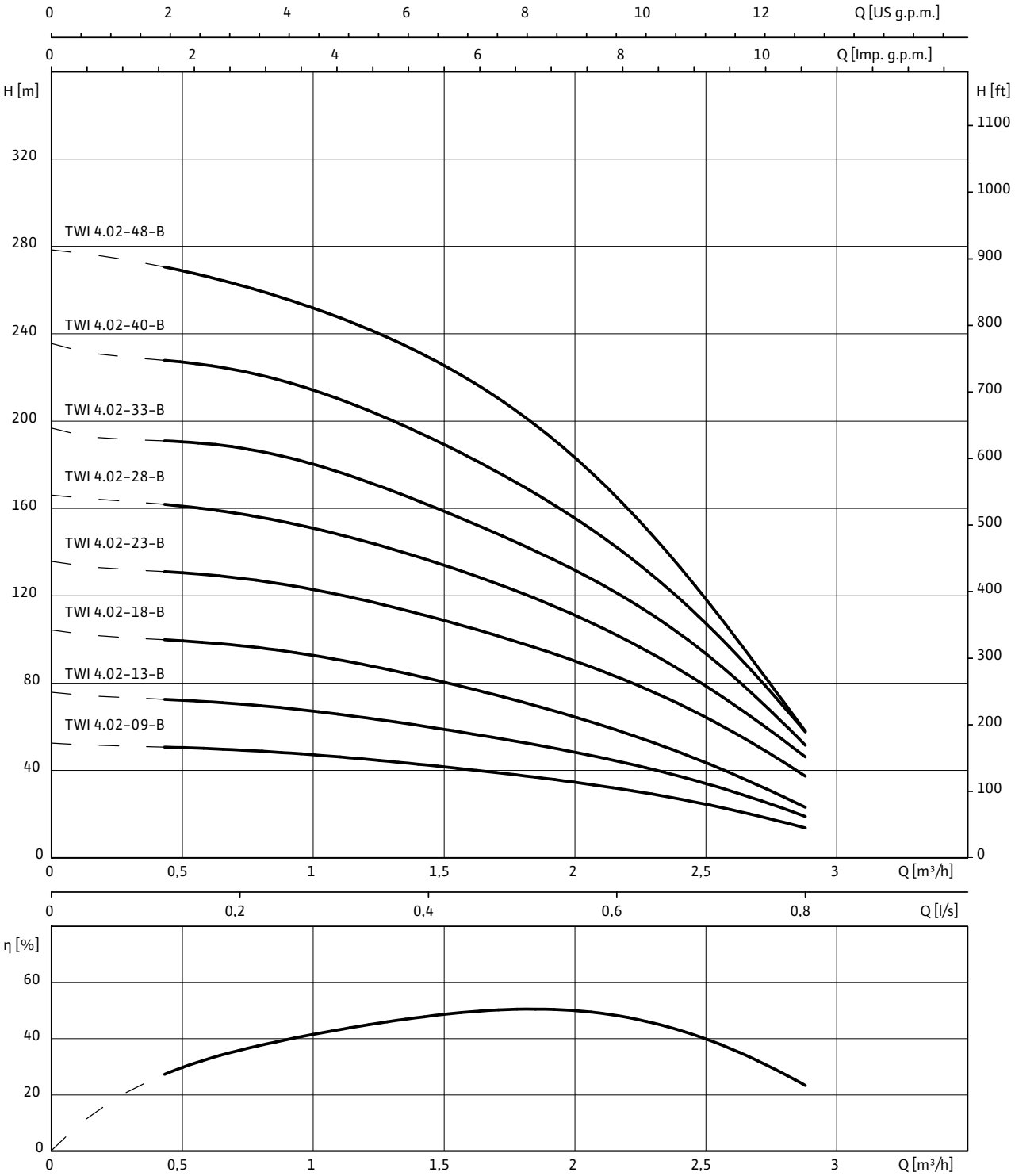

3~400 V, 50 Hz, p = 1 kg/dm^3, ν = 1x10^{-6} m^2/s, ISO 9906 Annex A, η = pump efficiency

Wilo-Sub TWI 4.02..-B

Motor data

Wilo-Sub...	Mains connection	Motor diameter	Nominal motor power	Nominal current	Length of connecting cable	Cable cross-section
		Ø	*P_2*	*I_N*		
		"	kW	A	m	mm^2
TWI 4.02-09-B	3~400 V, 50 Hz	4	0.55	1.6	2.5	4G1.5
TWI 4.02-13-B	3~400 V, 50 Hz	4	0.75	2.1	2.5	4G1.5
TWI 4.02-18-B	3~400 V, 50 Hz	4	1.1	3	2.5	4G1.5
TWI 4.02-23-B	3~400 V, 50 Hz	4	1.1	3	2.5	4G1.5
TWI 4.02-28-B	3~400 V, 50 Hz	4	1.5	4	2.5	4G1.5
TWI 4.02-33-B	3~400 V, 50 Hz	4	1.5	4	2.5	4G1.5
TWI 4.02-40-B	3~400 V, 50 Hz	4	2.2	5.9	2.5	4G1.5
TWI 4.02-48-B	3~400 V, 50 Hz	4	2.2	5.9	2.5	4G1.5

Flange dimensions

Wilo-Sub...	Connection			Pressure class			Dimensions		
	DN1	*DN2*	*DN3*	*PN_1*	*PN_2*	*PN_3*	*D2*	*K*	*D*
	mm			bar			mm		
TWI 4.02...	Rp 1¼	–	–	10-40	–	–	–	–	–
TWI 4.02...	–	DN 50	DN 50	–	10-40	10	4x18	125	165

[3)] For power cable in accordance with I_N, max. ø for threaded connection, [7)] Weight of pressure shroud

Information for order placements

Wilo-Sub...	Mains connection	🚚	Art no.	Art. no. for cooling jacket pipe	
				for vertical installation (B)	*for horizontal installation (D)*
TWI 4.02-09-B	3~400 V, 50 Hz	L	6042944	4064430	6037935
TWI 4.02-13-B	3~400 V, 50 Hz	L	6042945	4064430	6038901
TWI 4.02-18-B	3~400 V, 50 Hz	L	6042946	4064430	6038901
TWI 4.02-23-B	3~400 V, 50 Hz	K	6042947	4064430	6038901
TWI 4.02-28-B	3~400 V, 50 Hz	K	6042948	4064430	6038901
TWI 4.02-33-B	3~400 V, 50 Hz	K	6042949	4064430	6038901
TWI 4.02-40-B	3~400 V, 50 Hz	A	6042950	4064431	6037936
TWI 4.02-48-B	3~400 V, 50 Hz	A	6042951	4064431	6037936

🚚= ready for delivery, L = stock article, C = order-specific production approx. 2 weeks, K = order-specific production approx. 4 weeks, A = delivery time on request

Wilo-Sub TWI 4.02..-B

Dimension drawing Wilo-Sub TWI 4.02

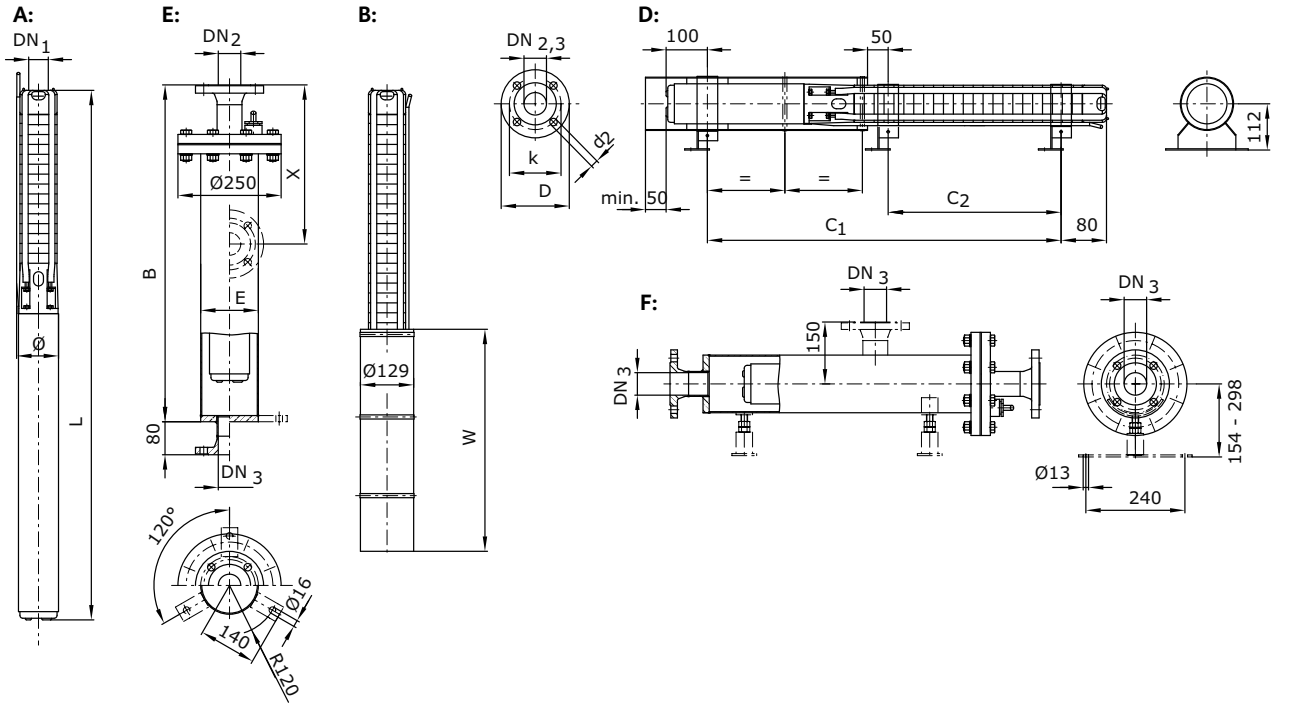

A = vertical, B = vertical with cooling jacket, D = horizontal with cooling jacket, E = vertical with pressure shroud, F = horizontal with pressure shroud

Dimensions, weights

Wilo-Sub...	Dimensions							Weight	Weight of unit	Installation
	B	*C1*	*C2*	*E*	*L*	*W*	*ø* [3]	*Jacket*[7]	*m*	
	mm							kg		
TWI 4.02-09-B	920	434	–	139.7	605	500	98	33	11.8	A, B, D, E, F
TWI 4.02-13-B	1220	524	187	139.7	717	500	98	36	13.8	A, B, D, E, F
TWI 4.02-18-B	1220	657	292	139.7	850	500	98	36	16.1	A, B, D, E, F
TWI 4.02-23-B	1220	762	397	139.7	955	500	98	36	17.1	A, B, D, E, F
TWI 4.02-28-B	1520	896	502	139.7	1089	500	98	38	19.2	A, B, D, E, F
TWI 4.02-33-B	1520	1001	607	139.7	1217	500	98	38	22.3	A, B, D, E, F
TWI 4.02-40-B	1820	1211	789	139.7	1392	750	98	41	25.5	A, B, D, E, F
TWI 4.02-48-B	1820	1379	957	139.7	1560	750	98	41	27.5	A, B, D, E, F

[3] For power cable in accordance with I_N, max. ø for threaded connection, [7] Weight of pressure shroud

Wilo-Sub TWI 4.03..-B

Pump curves Wilo-Sub TWI 4.03..-B

Minimum Efficiency Index (MEI): ≥ 0.7

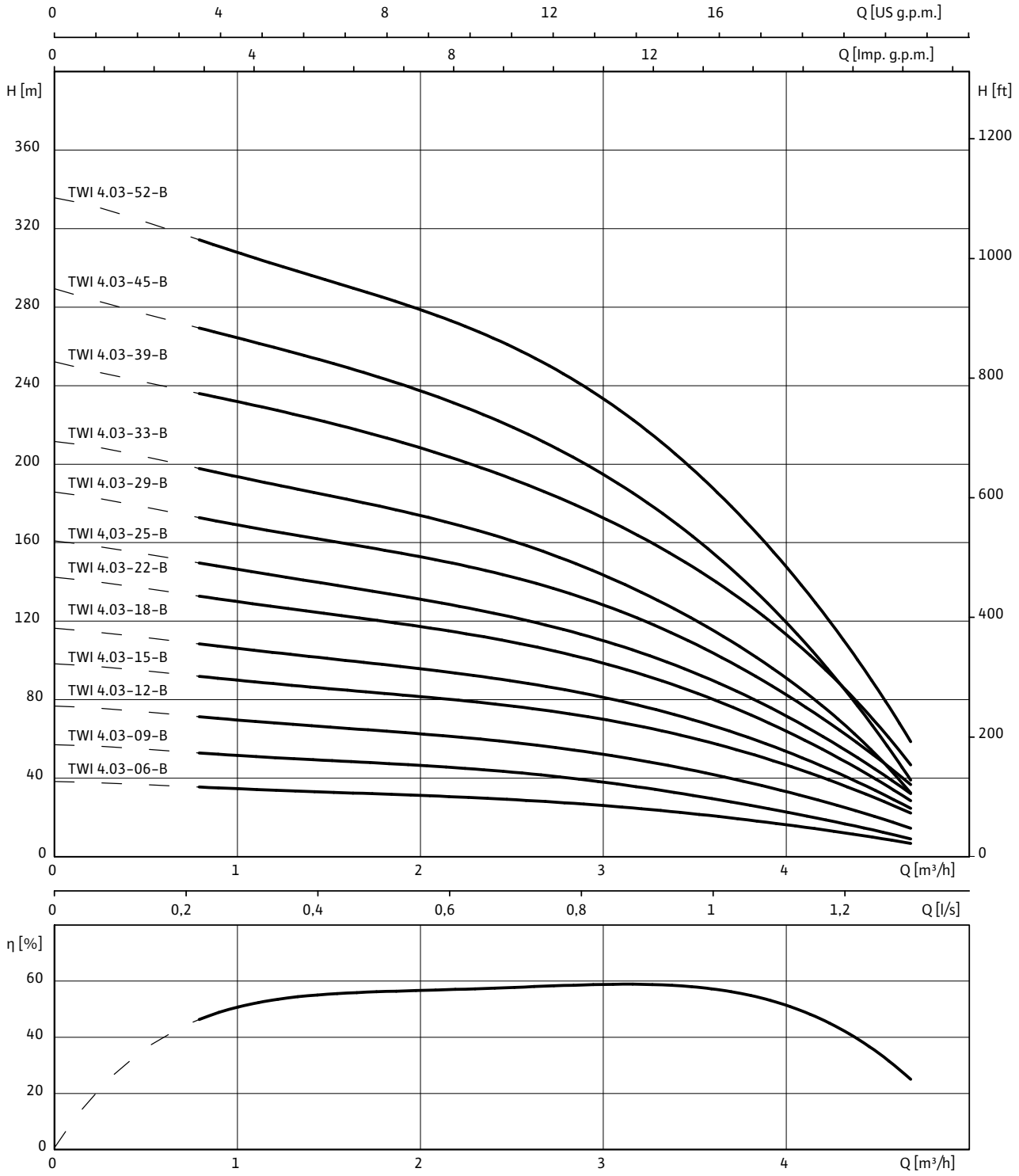

3~400 V, 50 Hz, p = 1 kg/dm^3, v = 1x10^{-6} m^2/s, ISO 9906 Annex A, η = pump efficiency

Wilo-Sub TWI 4.03..-B

Motor data

Wilo-Sub...	Mains connection	Motor diameter	Nominal motor power	Nominal current	Length of connecting cable	Cable cross-section
		Ø	P_2	I_N		
		"	kW	A	m	mm^2
TWI 4.03-06-B	3~400 V, 50 Hz	4	0.55	1.6	2.5	4G1.5
TWI 4.03-09-B	3~400 V, 50 Hz	4	0.75	2.1	2.5	4G1.5
TWI 4.03-12-B	3~400 V, 50 Hz	4	1.1	3	2.5	4G1.5
TWI 4.03-15-B	3~400 V, 50 Hz	4	1.1	3	2.5	4G1.5
TWI 4.03-18-B	3~400 V, 50 Hz	4	1.5	4	2.5	4G1.5
TWI 4.03-22-B	3~400 V, 50 Hz	4	1.5	4	2.5	4G1.5
TWI 4.03-25-B	3~400 V, 50 Hz	4	2.2	5.9	2.5	4G1.5
TWI 4.03-29-B	3~400 V, 50 Hz	4	2.2	5.9	2.5	4G1.5
TWI 4.03-33-B	3~400 V, 50 Hz	4	2.2	5.9	2.5	4G1.5
TWI 4.03-39-B	3~400 V, 50 Hz	4	3	7.8	2.5	4G1.5
TWI 4.03-45-B	3~400 V, 50 Hz	4	3	7.8	2.5	4G1.5
TWI 4.03-52-B	3~400 V, 50 Hz	4	3.7	9.1	2.5	4G1.5

Flange dimensions

Wilo-Sub...	Connection			Pressure class			Dimensions		
	DN1	*DN2*	*DN3*	PN_1	PN_2	PN_3	*D2*	*K*	*D*
	mm			bar			mm		
TWI 4.03...	Rp 1¼	–	–	10-40	–	–	–	–	–
TWI 4.03...	–	DN 50	DN 50	–	10-40	10	4x18	125	165

Information for order placements

Wilo-Sub...	Mains connection	🚚	Art no.	Art. no. for cooling jacket pipe	
				for vertical installation (B)	*for horizontal installation (D)*
TWI 4.03-06-B	3~400 V, 50 Hz	L	6042952	4064430	6037935
TWI 4.03-09-B	3~400 V, 50 Hz	L	6042953	4064430	6037935
TWI 4.03-12-B	3~400 V, 50 Hz	L	6042954	4064430	6037935
TWI 4.03-15-B	3~400 V, 50 Hz	L	6042955	4064430	6038901
TWI 4.03-18-B	3~400 V, 50 Hz	L	6042956	4064430	6038901
TWI 4.03-22-B	3~400 V, 50 Hz	L	6042957	4064430	6038901
TWI 4.03-25-B	3~400 V, 50 Hz	L	6042958	4064431	6037936
TWI 4.03-29-B	3~400 V, 50 Hz	K	6042959	4064431	6037936
TWI 4.03-33-B	3~400 V, 50 Hz	A	6042960	4064431	6037936
TWI 4.03-39-B	3~400 V, 50 Hz	A	6042961	4064431	6037936
TWI 4.03-45-B	3~400 V, 50 Hz	A	6042962	4064431	6037936
TWI 4.03-52-B	3~400 V, 50 Hz	A	6042963	4064431	6037936

🚚= ready for delivery, L = stock article, C = order-specific production approx. 2 weeks, K = order-specific production approx. 4 weeks, A = delivery time on request

Wilo-Sub TWI 4.03..-B

Dimension drawing Wilo-Sub TWI 4.03

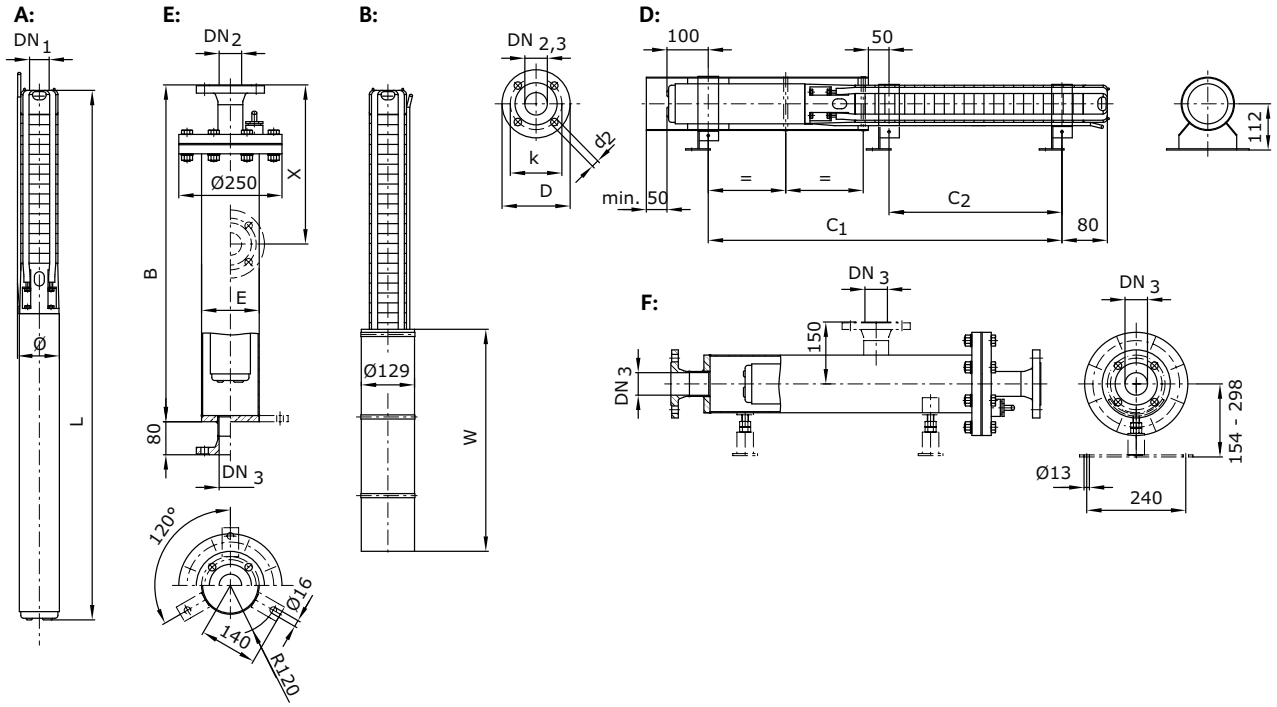

A = vertical, B = vertical with cooling jacket, D = horizontal with cooling jacket, E = vertical with pressure shroud, F = horizontal with pressure shroud

Dimensions, weights

Wilo-Sub...	Dimensions							Weight	Weight of unit	Installation
	B	*C1*	*C2*	*E*	*L*	*W*	*ø* [3]	*Jacket*[7]	*m*	
	mm							kg		
TWI 4.03-06-B	920	371	–	139.7	542	500	98	33	11.2	A, B, D, E, F
TWI 4.03-09-B	920	440	–	139.7	633	500	98	33	13	A, B, D, E, F
TWI 4.03-12-B	1220	531	–	139.7	724	500	98	36	15	A, B, D, E, F
TWI 4.03-15-B	1220	594	229	139.7	787	500	98	36	15.6	A, B, D, E, F
TWI 4.03-18-B	1220	686	292	139.7	879	500	98	36	17.3	A, B, D, E, F
TWI 4.03-22-B	1220	770	376	139.7	963	500	98	36	18.1	A, B, D, E, F
TWI 4.03-25-B	1520	861	439	139.7	1054	750	98	38	20.1	A, B, D, E, F
TWI 4.03-29-B	1520	945	523	139.7	1138	750	98	38	20.8	A, B, D, E, F
TWI 4.03-33-B	1520	1029	607	139.7	1245	750	98	38	23.7	A, B, D, E, F
TWI 4.03-39-B	1820	1327	753	139.7	1523	750	98	41	31.1	A, B, D, E, F
TWI 4.03-45-B	2120	1468	894	139.7	1649	750	98	44	32.6	A, B, D, E, F
TWI 4.03-52-B	2120	1655	1041	139.7	1834	750	98	44	37.2	A, B, D, E, F

[3] For power cable in accordance with I_N, max. ø for threaded connection, [7] Weight of pressure shroud

Wilo-Sub TWI 4.05..-B

Pump curves Wilo-Sub TWI 4.05..-B

Minimum Efficiency Index (MEI): ≥ 0.4

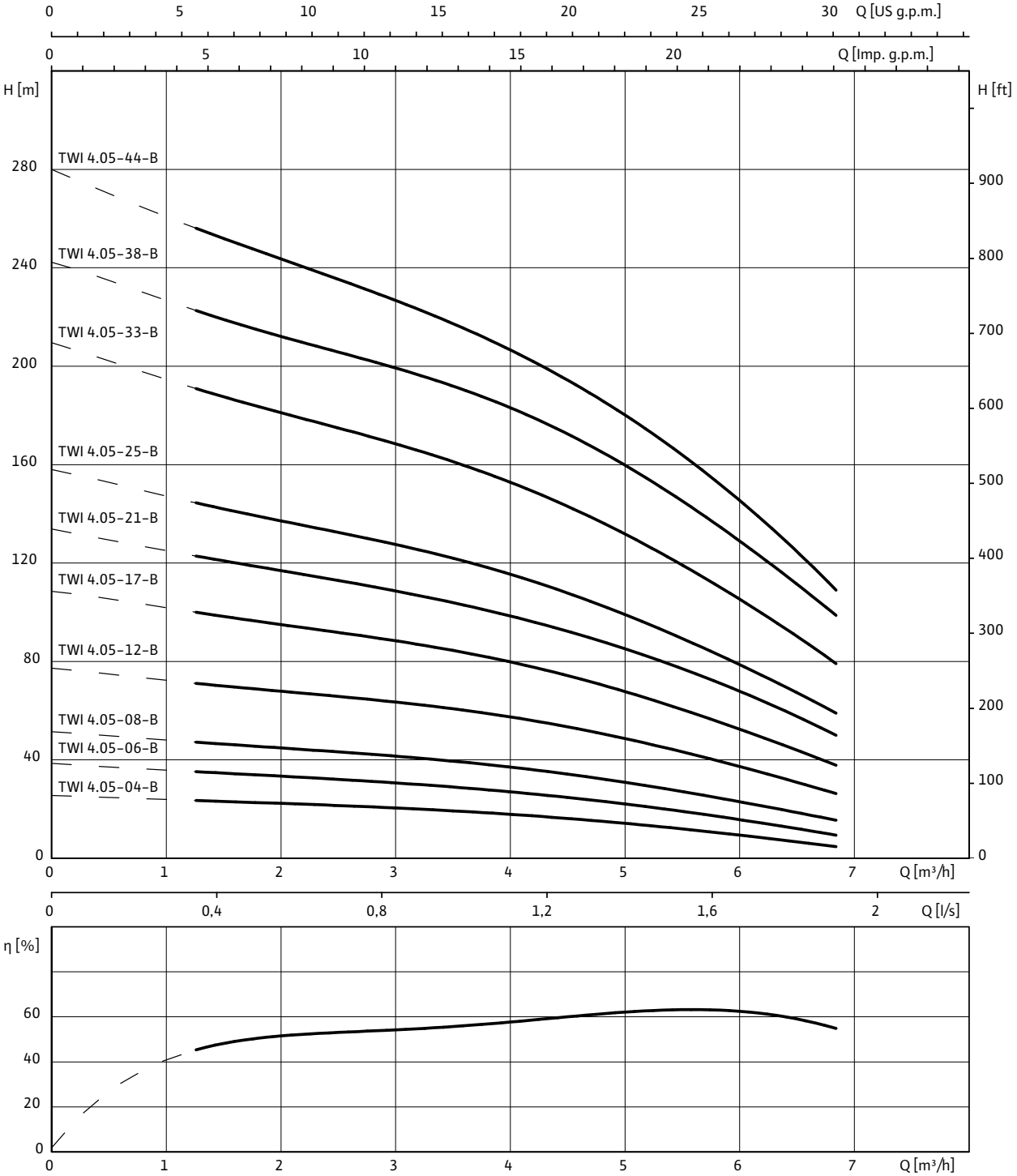

3~400 V, 50 Hz, p = 1 kg/dm^3, ν = 1x10^{-6} m^2/s, ISO 9906 Annex A, η = pump efficiency

Wilo-Sub TWI 4.05..-B

Motor data

Wilo-Sub...	Mains connection	Motor diameter	Nominal motor power	Nominal current	Length of connecting cable	Cable cross-section
		Ø	P_2	I_N		
		"	kW	A	m	mm^2
TWI 4.05-04-B	3~400 V, 50 Hz	4	0.55	1.6	2.5	4G1.5
TWI 4.05-06-B	3~400 V, 50 Hz	4	0.55	1.6	2.5	4G1.5
TWI 4.05-08-B	3~400 V, 50 Hz	4	0.75	2.1	2.5	4G1.5
TWI 4.05-12-B	3~400 V, 50 Hz	4	1.5	4	2.5	4G1.5
TWI 4.05-17-B	3~400 V, 50 Hz	4	2.2	5.9	2.5	4G1.5
TWI 4.05-21-B	3~400 V, 50 Hz	4	2.2	5.9	2.5	4G1.5
TWI 4.05-25-B	3~400 V, 50 Hz	4	2.2	5.9	2.5	4G1.5
TWI 4.05-33-B	3~400 V, 50 Hz	4	3	7.8	2.5	4G1.5
TWI 4.05-38-B	3~400 V, 50 Hz	4	3.7	9.1	2.5	4G1.5
TWI 4.05-44-B	3~400 V, 50 Hz	4	4	10	2.5	4G1.5

Flange dimensions

Wilo-Sub...	Connection			Pressure class			Dimensions		
	DN1	*DN2*	*DN3*	PN_1	PN_2	PN_3	*D2*	*K*	*D*
	mm			bar			mm		
TWI 4.05...	Rp 1½	–	–	10-40	–	–	–	–	–
TWI 4.05...	–	DN 50	DN 50	–	10-40	10	4x18	125	165

[3)] For power cable in accordance with I_N, max. ø for threaded connection, [7)] Weight of pressure shroud

Information for order placements

Wilo-Sub...	Mains connection	🚚	Art no.	Art. no. for cooling jacket pipe	
				for vertical installation (B)	*for horizontal installation (D)*
TWI 4.05-04-B	3~400 V, 50 Hz	L	6042964	4064430	6037935
TWI 4.05-06-B	3~400 V, 50 Hz	L	6043553	4064430	6037935
TWI 4.05-08-B	3~400 V, 50 Hz	L	6042965	4064430	6037935
TWI 4.05-12-B	3~400 V, 50 Hz	L	6043554	4064430	6037935
TWI 4.05-17-B	3~400 V, 50 Hz	L	6042966	4064431	6037936
TWI 4.05-21-B	3~400 V, 50 Hz	L	6042967	4064431	6037936
TWI 4.05-25-B	3~400 V, 50 Hz	L	6042968	4064431	6037936
TWI 4.05-33-B	3~400 V, 50 Hz	K	6042969	4064431	6037936
TWI 4.05-38-B	3~400 V, 50 Hz	K	6042970	4064431	6037936
TWI 4.05-44-B	3~400 V, 50 Hz	K	6042971	4064431	6037936

🚚= ready for delivery, L = stock article, C = order-specific production approx. 2 weeks, K = order-specific production approx. 4 weeks, A = delivery time on request

Wilo-Sub TWI 4.05..-B

Dimension drawing Wilo-Sub TWI 4.05

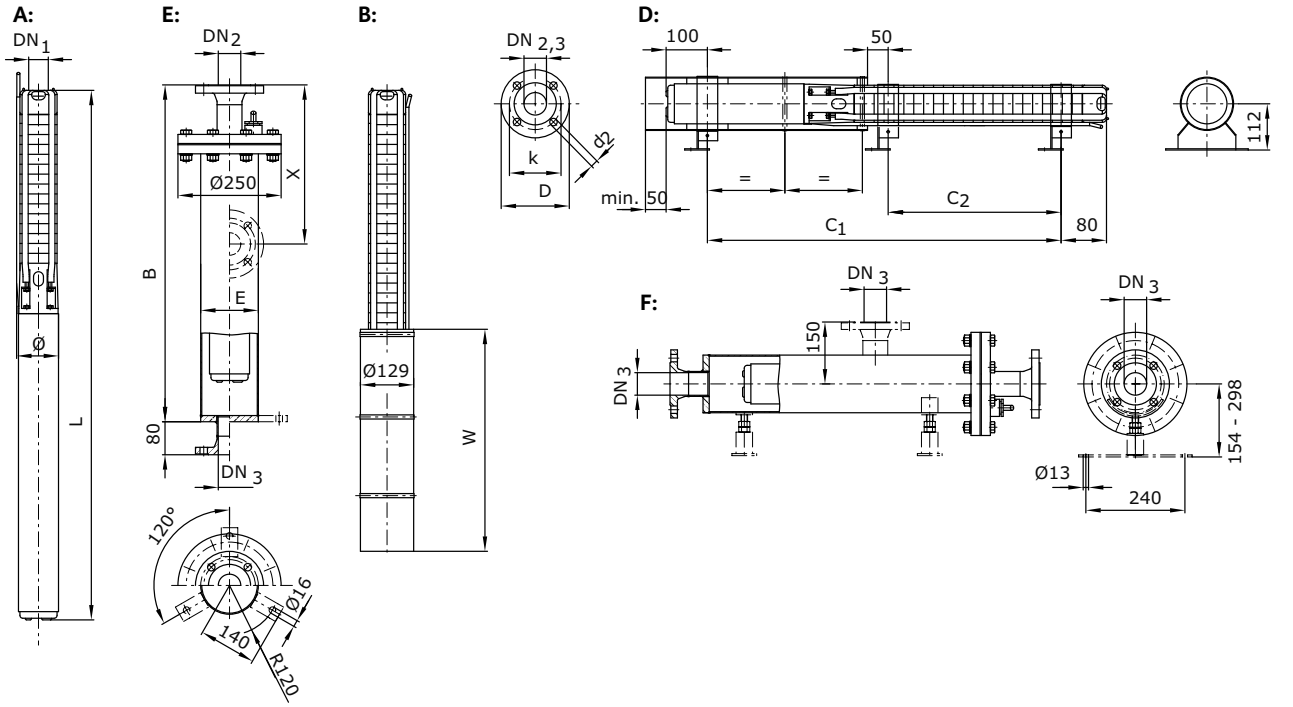

A = vertical, B = vertical with cooling jacket, D = horizontal with cooling jacket, E = vertical with pressure shroud, F = horizontal with pressure shroud

Dimensions, weights

Wilo-Sub...	Dimensions							Weight	Weight of unit	Installation
	B	*C1*	*C2*	*E*	*L*	*W*	*ø* [3]	*Jacket*[7]	*m*	
	mm							kg		
TWI 4.05-04-B	920	329	–	139.7	500	500	98	33	10.8	A, B, D, E, F
TWI 4.05-06-B	920	371	–	139.7	542	500	98	33	11.2	A, B, D, E, F
TWI 4.05-08-B	920	419	–	139.7	612	500	98	33	12.8	A, B, D, E, F
TWI 4.05-12-B	1220	560	–	139.7	753	500	98	36	16.2	A, B, D, E, F
TWI 4.05-17-B	1220	693	271	139.7	886	750	98	36	18.5	A, B, D, E, F
TWI 4.05-21-B	1220	777	355	139.7	970	750	98	36	19.3	A, B, D, E, F
TWI 4.05-25-B	1520	861	439	139.7	1054	750	98	38	20	A, B, D, E, F
TWI 4.05-33-B	1820	1181	607	139.7	1382	750	98	41	29.5	A, B, D, E, F
TWI 4.05-38-B	1820	1367	753	139.7	1525	750	98	41	33.6	A, B, D, E, F
TWI 4.05-44-B	2120	1508	858	139.7	1689	750	98	44	36.9	A, B, D, E, F

[3] For power cable in accordance with I_N, max. ø for threaded connection, [7] Weight of pressure shroud

Wilo-Sub TWI 4.09..-B

Pump curves Wilo-Sub TWI 4.09..-B

Minimum Efficiency Index (MEI): ≥ 0.4

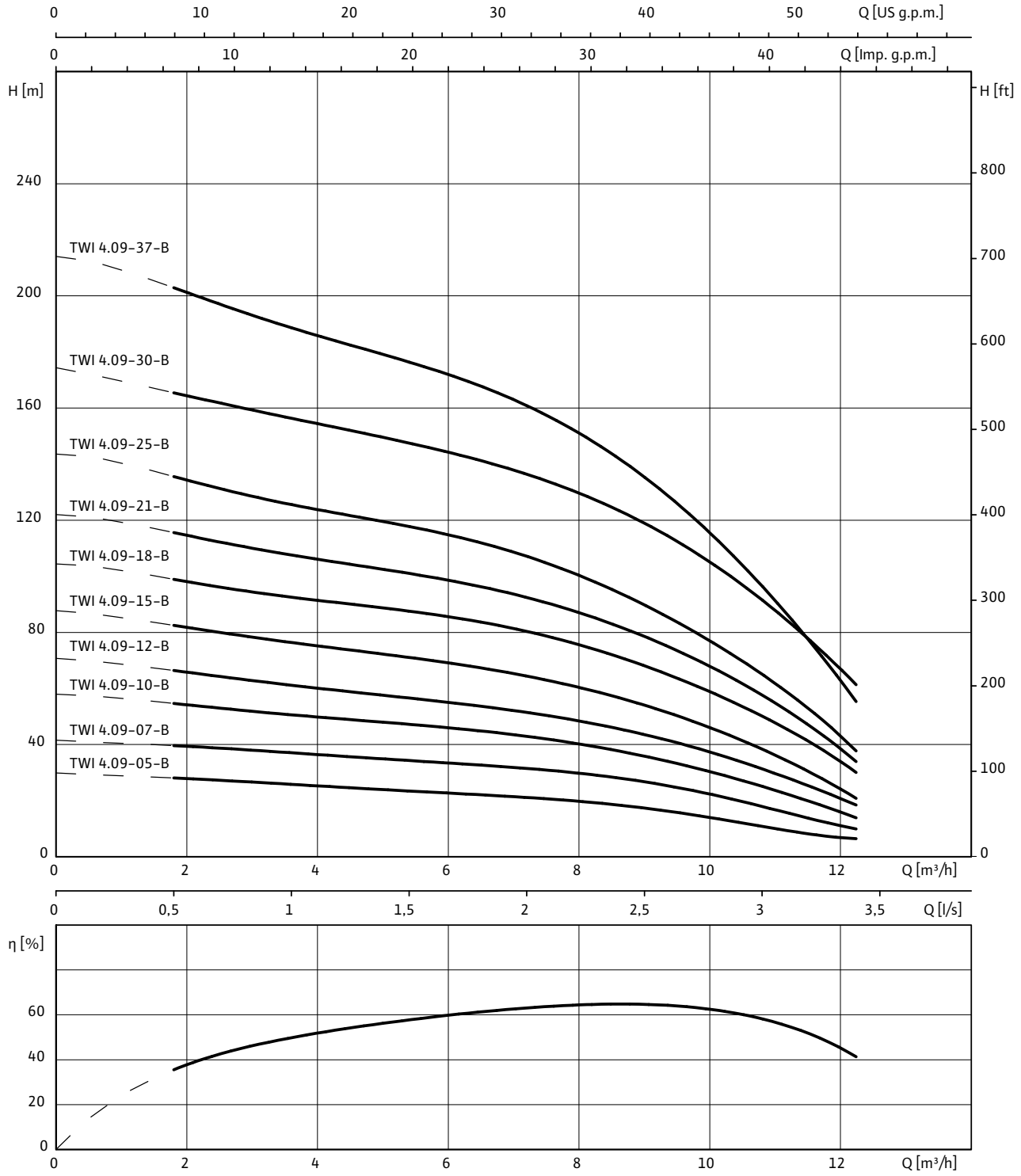

3~400 V, 50 Hz, p = 1 kg/dm^3, v = 1x10^{-6} m^2/s, ISO 9906 Annex A, η = pump efficiency

Wilo-Sub TWI 4.09..-B

Motor data

Wilo-Sub...	Mains connection	Motor diameter	Nominal motor power	Nominal current	Length of connecting cable	Cable cross-section
		Ø	P_2	I_N		
		"	kW	A	m	mm^2
TWI 4.09-05-B	3~400 V, 50 Hz	4	1.1	3	2.5	4G1.5
TWI 4.09-07-B	3~400 V, 50 Hz	4	1.1	3	2.5	4G1.5
TWI 4.09-10-B	3~400 V, 50 Hz	4	1.5	4	2.5	4G1.5
TWI 4.09-12-B	3~400 V, 50 Hz	4	2.2	5.9	2.5	4G1.5
TWI 4.09-15-B	3~400 V, 50 Hz	4	2.2	5.9	2.5	4G1.5
TWI 4.09-18-B	3~400 V, 50 Hz	4	3	7.8	2.5	4G1.5
TWI 4.09-21-B	3~400 V, 50 Hz	4	3.7	9.1	2.5	4G1.5
TWI 4.09-25-B	3~400 V, 50 Hz	4	3.7	9.1	2.5	4G1.5
TWI 4.09-30-B	3~400 V, 50 Hz	4	5.5	13.7	2.5	4G1.5
TWI 4.09-37-B	3~400 V, 50 Hz	4	5.5	13.7	2.5	4G1.5

Flange dimensions

Wilo-Sub...	Connection			Pressure class			Dimensions		
	DN1	*DN2*	*DN3*	PN_1	PN_2	PN_3	*D2*	*K*	*D*
	mm			bar			mm		
TWI 4.09...	Rp 2	–	–	10-40	–	–	–	–	–
TWI 4.09...	–	DN 50	DN 50	–	10-40	10	4x18	125	165

[3)] For power cable in accordance with I_N, max. ø for threaded connection, [7)] Weight of pressure shroud

Information for order placements

Wilo-Sub...	Mains connection	🚚	Art no.	Art. no. for cooling jacket pipe	
				for vertical installation (B)	*for horizontal installation (D)*
TWI 4.09-05-B	3~400 V, 50 Hz	L	6042972	4064431	6037937
TWI 4.09-07-B	3~400 V, 50 Hz	L	6042973	4064431	6037937
TWI 4.09-10-B	3~400 V, 50 Hz	L	6042974	4064431	6037936
TWI 4.09-12-B	3~400 V, 50 Hz	L	6043555	4064431	6037936
TWI 4.09-15-B	3~400 V, 50 Hz	L	6042975	4064431	6037936
TWI 4.09-18-B	3~400 V, 50 Hz	L	6042976	4064431	6037936
TWI 4.09-21-B	3~400 V, 50 Hz	L	6042977	4064432	6038903
TWI 4.09-25-B	3~400 V, 50 Hz	L	6042978	4064432	6038903
TWI 4.09-30-B	3~400 V, 50 Hz	K	6042979	4064432	6038904
TWI 4.09-37-B	3~400 V, 50 Hz	K	6042980	4064432	6038904

🚚= ready for delivery, L = stock article, C = order-specific production approx. 2 weeks, K = order-specific production approx. 4 weeks, A = delivery time on request

Wilo-Sub TWI 4.09..-B

Dimension drawing Wilo-Sub TWI 4.09

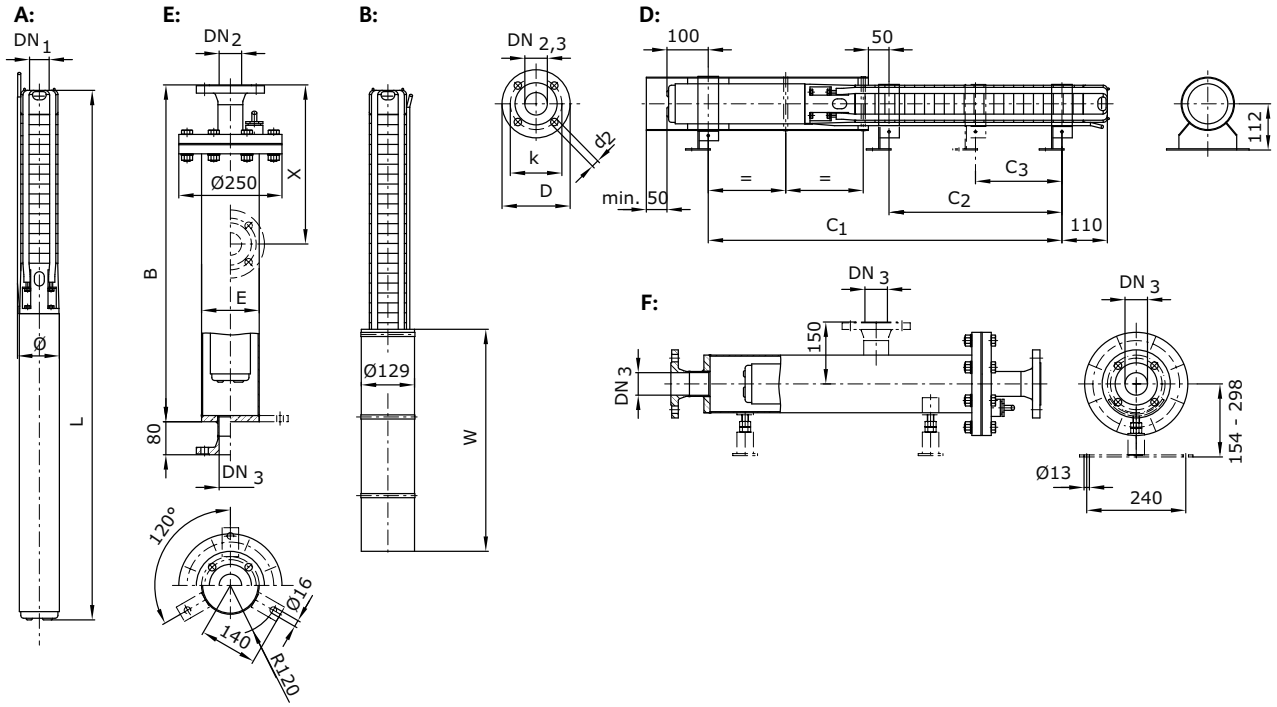

A = vertical, B = vertical with cooling jacket, D = horizontal with cooling jacket, E = vertical with pressure shroud, F = horizontal with pressure shroud

Dimensions, weights

Wilo-Sub...	Dimensions								Weight	Weight of unit	Installation
	B	*C1*	*C2*	*C3*	*E*	*L*	*W*	*ø* [3]	*Jacket* [7]	*m*	
	mm								kg		
TWI 4.09-05-B	1220	502	–	–	139.7	717	750	98	36	15.7	A, B, D, E, F
TWI 4.09-07-B	1220	586	–	–	139.7	801	750	98	36	16.7	A, B, D, E, F
TWI 4.09-10-B	1220	741	292	–	139.7	956	750	98	36	19.4	A, B, D, E, F
TWI 4.09-12-B	1520	853	376	–	139.7	1068	750	98	38	21.8	A, B, D, E, F
TWI 4.09-15-B	1520	979	502	–	139.7	1194	750	98	38	23.3	A, B, D, E, F
TWI 4.09-18-B	1820	1257	628	–	139.7	1472	750	98	41	30.7	A, B, D, E, F
TWI 4.09-21-B	2120	1423	754	–	139.7	1636	1000	98	44	25	A, B, D, E, F
TWI 4.09-25-B	2120	1591	922	–	139.7	1804	1000	98	44	37	A, B, D, E, F
TWI 4.09-30-B	2420	1951	1132	566	139.7	2166	1000	98	46	46.7	A, B, D, E, F
TWI 4.09-37-B	2720	2245	1426	713	139.7	2457	1000	98	49	50.2	A, B, D, E, F

[3] For power cable in accordance with I_N, max. ø for threaded connection, [7] Weight of pressure shroud

Wilo-Sub TWI 4.14..-B

Pump curves Wilo-Sub TWI 4.14..-B

Minimum Efficiency Index (MEI): ≥ 0.1

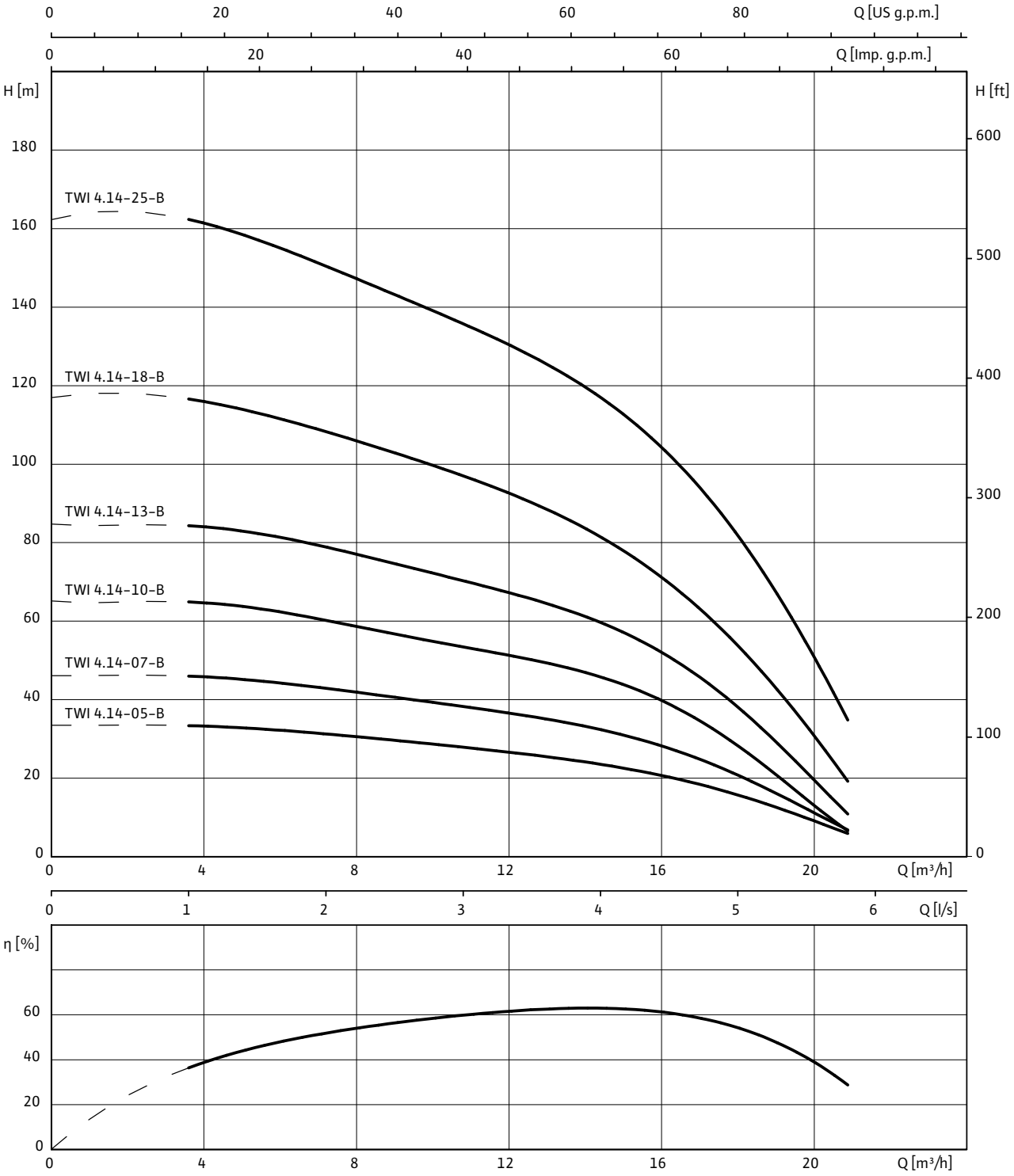

3~400 V, 50 Hz, p = 1 kg/dm^3, ν = 1x10^{-6} m^2/s, ISO 9906 Annex A, η = pump efficiency

Wilo-Sub TWI 4.14..-B

Motor data

Wilo-Sub...	Mains connection	Motor diameter	Nominal motor power	Nominal current	Length of connecting cable	Cable cross-section
		Ø	*P_2*	*I_N*		
		"	kW	A	m	mm^2
TWI 4.14-05-B	3~400 V, 50 Hz	4	2.2	5.9	2.5	4G1.5
TWI 4.14-07-B	3~400 V, 50 Hz	4	2.2	5.9	2.5	4G1.5
TWI 4.14-10-B	3~400 V, 50 Hz	4	3	7.8	2.5	4G1.5
TWI 4.14-13-B	3~400 V, 50 Hz	4	4	10	2.5	4G1.5
TWI 4.14-18-B	3~400 V, 50 Hz	4	5.5	13.7	2.5	4G1.5
TWI 4.14-25-B	3~400 V, 50 Hz	4	7.5	18.4	2.5	4G1.5

Flange dimensions

Wilo-Sub...	Connection			Pressure class			Dimensions		
	DN1	*DN2*	*DN3*	*PN_1*	*PN_2*	*PN_3*	*D2*	*K*	*D*
	mm			bar			mm		
TWI 4.14...	Rp 2	–	–	10-40	–	–	–	–	–
TWI 4.14...	–	DN 50	DN 50	–	10-40	10	4x18	125	165

[3)] For power cable in accordance with I_N, max. ø for threaded connection, [7)] Weight of pressure shroud

Information for order placements

Wilo-Sub...	Mains connection	🚚	Art no.	Art. no. for cooling jacket pipe	
				for vertical installation (B)	*for horizontal installation (D)*
TWI 4.14-05-B	3~400 V, 50 Hz	L	6042981	4064431	6037937
TWI 4.14-07-B	3~400 V, 50 Hz	L	6042982	4064431	6037936
TWI 4.14-10-B	3~400 V, 50 Hz	L	6042983	4064431	6037936
TWI 4.14-13-B	3~400 V, 50 Hz	L	6042984	4064432	6038903
TWI 4.14-18-B	3~400 V, 50 Hz	L	6042985	4064432	6038903
TWI 4.14-25-B	3~400 V, 50 Hz	L	6042986	4064432	6038904

🚚= ready for delivery, L = stock article, C = order-specific production approx. 2 weeks, K = order-specific production approx. 4 weeks, A = delivery time on request

Wilo-Sub TWI 4.14..-B

Dimension drawing Wilo-Sub TWI 4.14

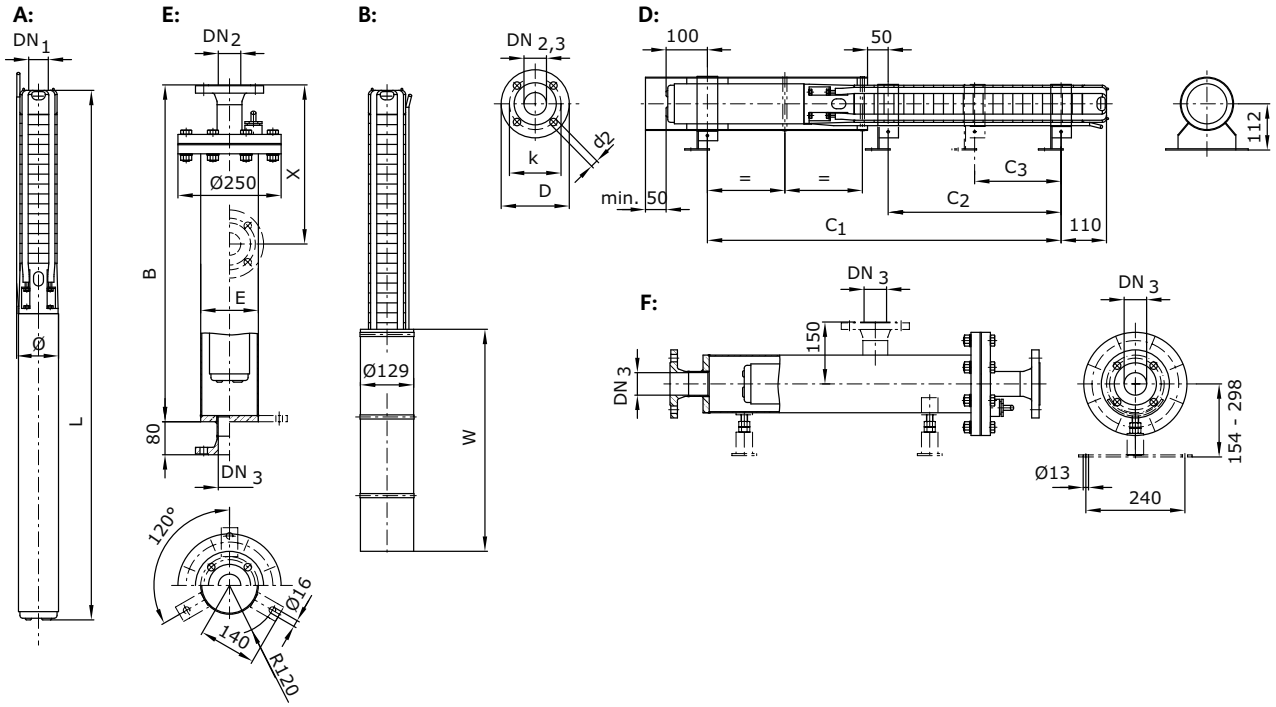

A = vertical, B = vertical with cooling jacket, D = horizontal with cooling jacket, E = vertical with pressure shroud, F = horizontal with pressure shroud

Dimensions, weights

Wilo-Sub...	Dimensions								Weight	Weight of unit	Installation
	B	*C1*	*C2*	*C3*	*E*	*L*	*W*	*ø* [3]	*Jacket* [7]	*m*	
	mm								kg		
TWI 4.14-05-B	1220	658	–	–	139.7	867	750	98	36	19	A, B, D, E, F
TWI 4.14-07-B	1520	788	291	–	139.7	997	750	98	38	20.3	A, B, D, E, F
TWI 4.14-10-B	1820	1135	486	–	139.7	1344	750	98	41	28.1	A, B, D, E, F
TWI 4.14-13-B	2120	1406	681	–	139.7	1615	1000	98	44	34.7	A, B, D, E, F
TWI 4.14-18-B	2420	1845	1006	–	139.7	2054	1000	98	46	43.3	A, B, D, E, F
TWI 4.14-25-B	2920	2376	1461	731	139.7	2585	1000	98	51	51.4	A, B, D, E, F

[3] For power cable in accordance with I_N, max. ø for threaded connection, [7] Weight of pressure shroud

Pressure boosting

Single pumps

Series overview

Series	**Wilo-Helix EXCEL**	**Wilo-Helix VE**
Product photo		
Duty chart	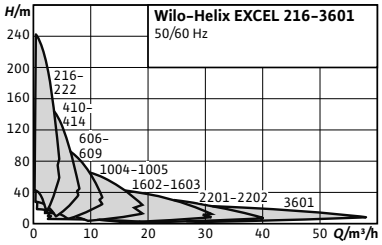	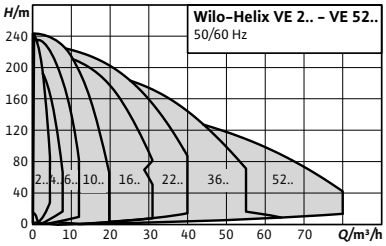
Design	Non-self-priming, highly efficient fully stainless-steel high-pressure multistage centrifugal pump with EC motor in vertical design with integrated high-efficiency drive and in-line connections	Electronically controlled, non-self-priming high-pressure multistage centrifugal pump in vertical design, with in-line connections
Application	• Water supply and pressure boosting • Industrial circulation systems • Process water • Cooling water circulation systems • Fire extinguishing systems • Washing systems • Irrigation	• Water supply and pressure boosting • Industrial circulation systems • Process water • Cooling water circuits • Fire extinguishing systems • Washing systems • Irrigation Version in stainless steel 1.44XX for aggressive media
H_{max}	240 m	240 m
Q_{max}	58 m^3/h	80 m^3/h
Special features/ product advantages	• Highly efficient EC motor (efficiency higher than IE4 limit values in accordance with IEC TS 60034-31 Ed.1) • Efficiency-optimised, laser-welded 2D/3D high-efficiency hydraulics • High Efficiency Drive with wide control range • Optional interfaces for BUS communication via plug-in IF-modules • Control modes: Speed control, constant pressure and PID • The HELIX series is available with a user-friendly "X-Seal" cartridge mechanical seal (with standard gasket) which enables quick and easy maintenance • The spacer coupling allows the mechanical seal to be replaced without removing the motor (from 7.5 kW) • WRAS/KTW/ACS approval for all parts that come in contact with the fluid (EPDM version)	• Energy savings due to integrated frequency converter with wide control range • IEC three-phase AC motor (level IE2) • Control modes: Speed control, constant pressure and PID • Optional interfaces for BUS communication via plug-in IF-modules • Efficiency-optimised, laser-welded 2D/3D high-efficiency hydraulics • The entire Helix series is equipped with a user-friendly X-Seal cartridge mechanical seal (with standard gasket) which allows fast and easy maintenance • The spacer coupling allows the mechanical seal to be replaced without removing the motor (from 7.5 kW) • WRAS/ACS approval for all parts that come in contact with the fluid (EPDM version)
Further information	Series information from page 202 Wilo online catalogue at www.wilo.com	Series information from page 231 Wilo online catalogue at www.wilo.com

Series overview

Series	**Wilo-Helix V**	**Wilo-Helix X-Care**
Product photo		
Duty chart	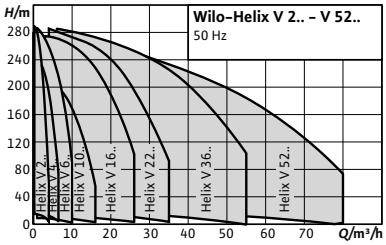	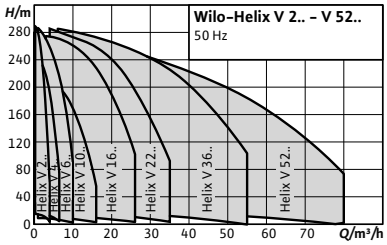
Design	Non-self-priming, high-efficiency multistage high-pressure centrifugal pump in vertical design with in-line connections	Non self-priming, highly efficient high-pressure multistage centrifugal pump in vertical design with in-line connections with "X-Care" additional module (sensor system for monitoring the pump with building automation connection option)
Application	• Water supply and pressure boosting • Industrial circulation systems • Process water • Cooling water circulation systems • Fire extinguishing systems • Washing systems • Irrigation Versions with stainless steel 1.44xx for aggressive media	• Water supply and pressure boosting • Industrial circulation systems • Process water • Cooling water circulation systems • Fire extinguishing systems • Washing systems • Irrigation Versions with stainless steel 1.44xx for aggressive media
H_{max}	280 m	280 m
Q_{max}	80 m^3/h	80 m^3/h
Special features/ product advantages	• Efficiency-optimised, laser-welded, optimised 2D/3D hydraulics • IE2 IEC standard motor, 3-phase, 2 pole (IE3 motor on request) • Thanks to their modular pump housing (height and flanges can be adjusted), Helix pumps can be installed in existing piping. • Helix V 22-52: Pressure sensor connections on the pump housing allow simple monitoring and control of the pump operation (optional for the standard version and included in versions for aggressive media) • The entire HELIX series is available with a user-friendly "X-Seal" cartridge mechanical seal (with standard gasket) which enables quick and easy maintenance. • The spacer coupling (from ≥ 7.5 kW) allows the mechanical seal to be replaced without removing the motor. • In its standard position, the terminal box is aligned with the suction flange, but this can be changed if necessary. • Intermediate bearings (Al203/CW) ensure a long service life • Corrosion-resistant shaft thanks to stainless steel sleeve • WRAS/ACS approval for all parts that come in contact with the fluid	Helix pumps with an X-Care module combine the advantages of the Helix V series with those of constant monitoring of the pump parameters. • Integrated dry-running protection • Integrated pump monitoring - Speed - Direction of rotation - Operating pressure - Operating temperature - Operating hours counter - Start/stop counter - Overpressure protection • LED display • Interfaces - IR - CAN
Further information	Series information from page 354 Wilo online catalogue at www.wilo.com	Series information from page 389 Wilo online catalogue at www.wilo.com

Pressure boosting

Single pumps

Series overview

Series	**Wilo-Multivert MVIE**	**Wilo-Multivert MVI**
Product photo		
Duty chart	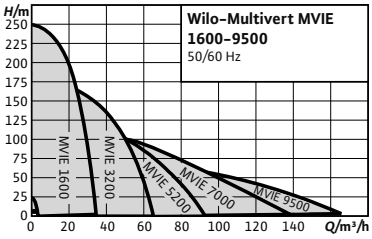	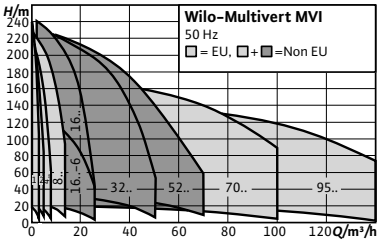
Design	Non-self-priming multistage pump with integrated frequency converter	Non-self-priming multistage pump
Application	• Water supply and pressure boosting • Fire extinguishing systems • Industrial circulation systems • Process engineering • Cooling water circulation systems • Washing and sprinkling systems	• Water supply and pressure boosting • Fire extinguishing systems • Boiler feed • Industrial circulation systems • Process engineering • Cooling water circulation systems • Washing and sprinkling systems
H_{max}	250 m	230 m
Q_{max}	165 m^3/h	140 m^3/h
Special features/ product advantages	• Easy commissioning • IEC three-phase AC motor (level IE2) • Integrated frequency converter • Full motor protection • Large control range • Hydraulics made of stainless steel 1.4301 (AISI 304) or 1.4404 (AISI 316 L) • All relevant components are KTW and WRAS certified	• All parts that come in contact with the fluid are corrosion-resistant • Materials: Stainless steel 1.4301 (AISI 304) or 1.4404 (AISI 316L), pump housing EN-GJL-250 cataphoretic-coated (MVI 70/95) • EPDM seals. • All relevant components are KTW and WRAS approved • IE2-IEC three-phase AC motor (≥ 0.75 kW, IE3 on request)
Further information	Series information from page 391 Wilo online catalogue at www.wilo.com	Series information from page 434 Wilo online catalogue at www.wilo.com

Series overview

Series	**Wilo-Multivert MVISE**	**Wilo-Multivert MVIS**
Product photo		
Duty chart	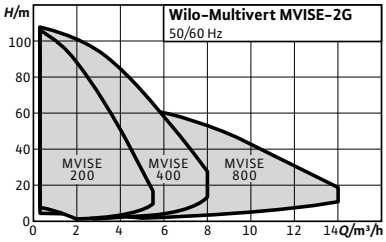	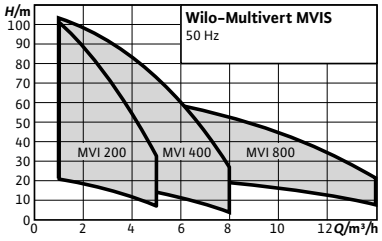
Design	Non-self-priming multistage pump with glandless pump motor and integrated frequency converter	Non-self-priming multistage pump with glandless pump motor
Application	• Water supply and pressure boosting	• Water supply and pressure boosting systems
H_{max}	110 m	114 m
Q_{max}	14 m^3/h	14 m^3/h
Special features/ product advantages	• Easy commissioning • Glandless pump technology • Low-noise (up to 20 dB [A] quieter than conventional pumps) • Integrated frequency converter • All parts that come in contact with the fluid are made of stainless steel 1.4301 (AISI 304) • All relevant components are KTW- and WRAS-certified	• Low-noise (up to 20 dB [A] quieter than conventional pumps) • All parts that come in contact with the fluid are made of stainless steel 1.4301 (AISI 304) • Glandless pump technology • All relevant components are KTW- and WRAS-certified
Further information	Series information from page 468 Wilo online catalogue at www.wilo.com	Series information from page 480 Wilo online catalogue at www.wilo.com

Pressure boosting

Single pumps

Series overview

Series	**Wilo-Economy MHIE**	**Wilo-Economy MHI**
Product photo		
Duty chart	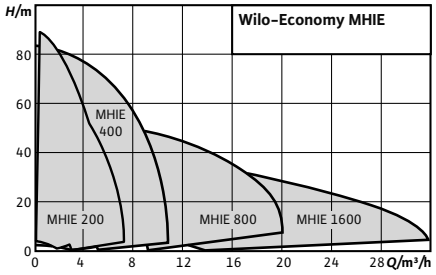	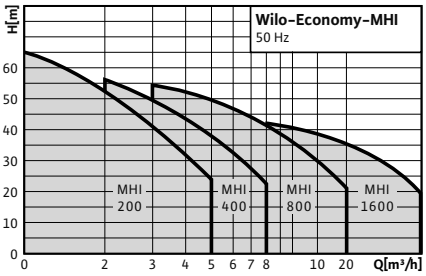
Design	Non-self-priming multistage pump with integrated frequency converter	Non-self-priming multistage pump
Application	• Water supply and pressure boosting • Fire extinguishing systems • Industrial circulation systems • Process engineering • Cooling water circulation systems • Washing and sprinkling systems	• Water supply and pressure boosting • Commerce and industry • Cooling water circulation systems • Washing and sprinkling systems
H_{max}	84 m	70 m
Q_{max}	36 m^3/h	25 m^3/h
Special features/ product advantages	• Easy commissioning • All parts that come in contact with the fluid are made of stainless steel 1.4301 (AISI 304) or 1.4404 (AISI 316 L) • Compact design • IEC three-phase AC motor (level IE2) • Integrated frequency converter – With optional interfaces for bus communication using plug-in IF-Modules in the case of 3~ motors • Full motor protection • All relevant components are KTW and WRAS certified	• IE2-IEC three-phase AC motor (≥ 0.75 kW) • All parts that come in contact with the fluid are made of stainless steel 1.4301 (AISI 304) or 1.4404 (AISI 316 L) • Compact design • All relevant components are KTW and WRAS certified
Further information	Series information from page 491 Wilo online catalogue at www.wilo.com	Series information from page 507 Wilo online catalogue at www.wilo.com

Series overview

Series	**Wilo-Economy MHIL**	**Wilo-Multivert MVIL**
Product photo		
Duty chart	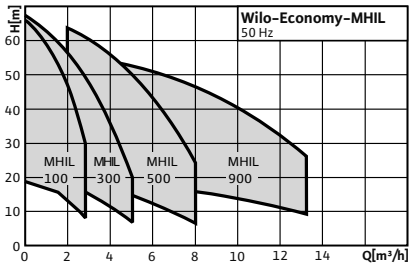	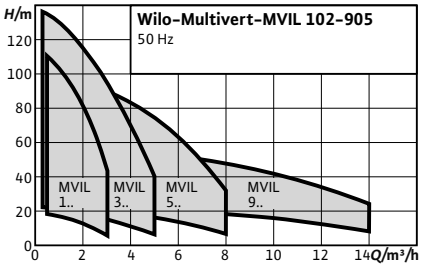
Design	Non-self-priming multistage pump	Non-self-priming multistage pump
Application	• Water supply and pressure boosting • Commerce and industry • Washing and spraying systems • Rainwater utilisation • Cooling and cold water circuits	• Water supply and pressure boosting • Commerce and industry • Washing and spraying systems • Rainwater utilisation • Cooling and cold water circuits
H_{max}	68 m	136 m
Q_{max}	13 m^3/h	14 m^3/h
Special features/ product advan-tages	• IE2-IEC three-phase AC motor (≥ 0.75 kW) • Impellers and stage chambers made of 1.4301 stainless steel (AISI 304) • Pump housing made of EN-GJL-250 cast iron, cataphoretic coated • All relevant components are KTW, WRAS, ACS certified • Single-phase AC and three-phase AC versions	• IE2-IEC three-phase AC motor (≥ 0.75 kW) • Stainless steel hydraulics 1.4301 (AISI 304) • Pump housing made of cast iron EN-GJL-250, cataphoretic coated • All relevant components are KTW, WRAS, ACS certified • Single-phase AC and three-phase AC versions
Further information	Series information from page 511 Wilo online catalogue at www.wilo.com	Series information from page 514 Wilo online catalogue at www.wilo.com

Series description Wilo-Helix EXCEL

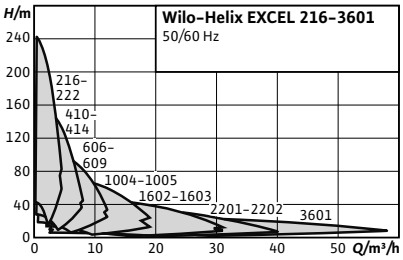

ErP READY APPLIES TO EUROPEAN DIRECTIVE FOR ENERGY RELATED PRODUCTS

Design
Non-self-priming, highly efficient fully stainless-steel high-pressure multistage centrifugal pump with EC motor in vertical design with integrated high-efficiency drive and in-line connections

Application
- Water supply and pressure boosting
- Industrial circulation systems
- Process water
- Cooling water circulation systems
- Fire extinguishing systems
- Washing systems
- Irrigation

Type key

Example:	**Helix EXCEL 22 02 - 2 / 16 / E / KS**
Helix EXCEL	Vertical high-pressure multistage centrifugal pump in in-line design (electronically controlled)
4	Flow rate in m^3/h
14	Number of impellers
1	Pump material
	1 = Pump housing 1.4301 (AISI 304) Hydraulics 1.4307 (AISI 304L); Baseplate EN-GJL 250, cataphoretic coated; [only Helix EXCEL 16.. and smaller]
	2 = Pump housing 1.4404 (AISI 316L) Hydraulics 1.4404 (AISI 316L) Baseplate EN-GJL 250, cataphoric coated
	3 = Pump housing EN-GJL-250 (cataphoretic-coated) Hydraulics 1.4307 (AISI 304L); [only Helix EXCEL 22.. and larger]
16	Maximum operating pressure in bar
	16 = 16 bar (PN 16 flange)
	25 = 25 bar (PN 25 flange)
E	Gasket type E = EPDM V = FKM
K	Cartridge mechanical seal
S	System alignment of the lantern (position of filling and venting screw 90 ° to direction of flow)

Special features/product advantages
- Highly efficient EC motor (efficiency higher than IE4 limit values in accordance with IEC TS 60034-31 Ed.1)
- Efficiency-optimised, laser-welded 2D/3D high-efficiency hydraulics
- High Efficiency Drive with wide control range
- Optional interfaces for BUS communication via plug-in IF-modules
- Control modes: Speed control, constant pressure and PID
- The HELIX series is available with a user-friendly "X-Seal" cartridge mechanical seal (with standard gasket) which enables quick and easy maintenance

Series description Wilo-Helix EXCEL

- The spacer coupling allows the mechanical seal to be replaced without removing the motor (from 7.5 kW)
- WRAS/KTW/ACS approval for all parts that come in contact with the fluid (EPDM version)

Equipment/function
- Impellers, diffusors and stage housings made of corrosion-resistant material

Technical data
- Electrical connection: 3~400V/480 V (±10 %), 50/60 Hz, 3~380 V (±10 %), 60 Hz
- Fluid temperature range:
  - Helix EXCEL 2 – 16 (EPDM): -30 to 120 °C
  - Helix EXCEL 2 – 16 (FKM): -15 to 90 °C
  - Helix EXCEL22 – 36 (EPDM): -20 to 120 °C
  - Helix EXCEL22 – 36 for aggressive media (FKM): -15 to 90 °C (-30 to 120 °C with EPDM gasket on request)
- Max. operating pressure: 16/25 bar
- Protection class: IP 55
- Max. ambient temperature: +40 °C (extended temperature ranges on request)
- Available versions:
  - Helix EXCEL 2 – 16: PN 16 with oval flanges, PN 25 with round flanges in accordance with ISO 2531 and ISO 7005
  - Helix EXCEL 22 – 36: PN 16 and PN 25 with round flanges in accordance with ISO 2531 and ISO 7005

Materials
Helix EXCEL 2, 4, 6, 10, 16:
Standard version
- Impellers, stage housings and diffusors of stainless steel 1.4307
- Pump housing of stainless steel 1.4301
- Baseplate and lantern EN-GJL-250 (cataphoretic coated)
- Shaft of stainless steel 1.4301 or 1.4462 (depending on version)
- Sleeve under the mechanical seal 1.4404
- O-ring of EPDM (FKM gasket on request)
- Jacket pipe of stainless steel 1.4301

For aggressive media
- Impellers, stage housings and diffusors of stainless steel 1.4404
- Pump housing of stainless steel 1.4404
- Shaft of stainless steel 1.4404 or 1.4462 (depending on version)
- Sleeve under the mechanical seal 1.4404
- O-ring of EPDM (FKM gasket on request)
- Jacket pipe of stainless steel 1.4404

Helix EXCEL 22, 36:
Standard version
- Stage housings, impellers, diffusors of stainless steel 1.4307
- Pump housing of cataphoretic-coated grey cast iron EN-GJL 250, loose flanges of EN-GJS 400 for Helix EXCEL 36-52.
- Shaft of stainless steel 1.4057
- Sleeve under the mechanical seal 1.4404
- O-ring of EPDM (FKM gasket on request)
- Jacket pipe of stainless steel 1.4301

For aggressive media
- Stage housings, impellers, diffusors of stainless steel 1.4404 with passivation for highest possible resistance to corrosion
- Pump housing: all parts which come in contact with the media are made of cast stainless steel 1.4409; loose flanges of cataphoretic-coated grey cast iron EN-GJL 250 for Helix EXCEL 22 / EN-GJS 400 for Helix EXCEL 36-52.
- Baseplate of stainless steel 1.4301
- Shaft of stainless steel 1.4404 or 1.4462 (depending on version)
- Sleeve under the mechanical seal 1.4404
- O-ring of FKM (EPDM gasket on request)
- Pressure shroud of stainless steel 1.4404

Scope of delivery
- Helix EXCEL high-pressure multistage centrifugal pump
- Helix EXCEL 2 – 16: Oval counter flanges with corresponding screws and O-rings (PN16 variant) or bolts and gaskets if a counter flange is used (PN25 variant with round flanges)
- Helix EXCEL 22 – 52: Bolts and gaskets if a counter flange is used (PN16 and PN25 with round flanges)
- Installation and operating instructions
- Integrated funnel to make it easier to fill the pump (Helix EXCEL 2 – 16 only)

General notes - ErP (ecological design-) directive
- The benchmark for most efficient water pumps is MEI ≥ 0.70
- The efficiency of a pump with a trimmed impeller is usually lower than that of a pump with the full impeller diameter. The trimming of the impeller will adapt the pump to a fixed duty point, leading to reduced energy consumption. The minimum efficiency index (MEI) is based on the full impeller diameter.
- The operation of this water pump with variable duty points may be more efficient and economic when controlled, for example, by the use of a variable speed drive that matches the pump duty to the system.
- Information on benchmark efficiency is available at **www.europump.org/efficiencycharts**

Series description Wilo-Helix EXCEL

Electrical connection

3~400 V ≤7.5 kW

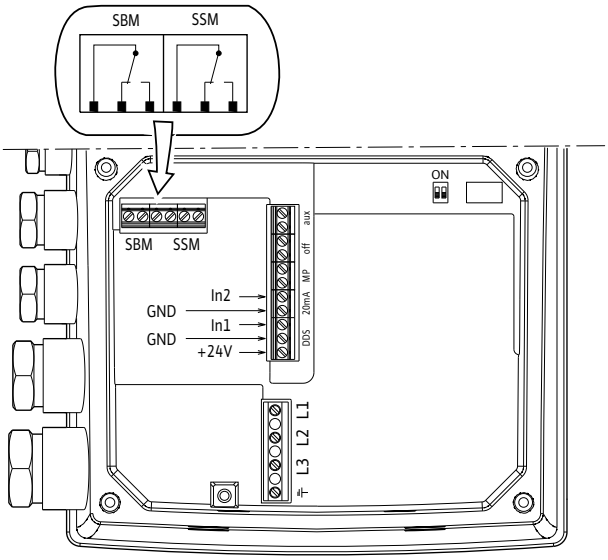

Pump curves, motor data Wilo-Helix EXCEL 2

Wilo-Helix EXCEL 216

Minimum Efficiency Index (MEI): ≥ 0.7

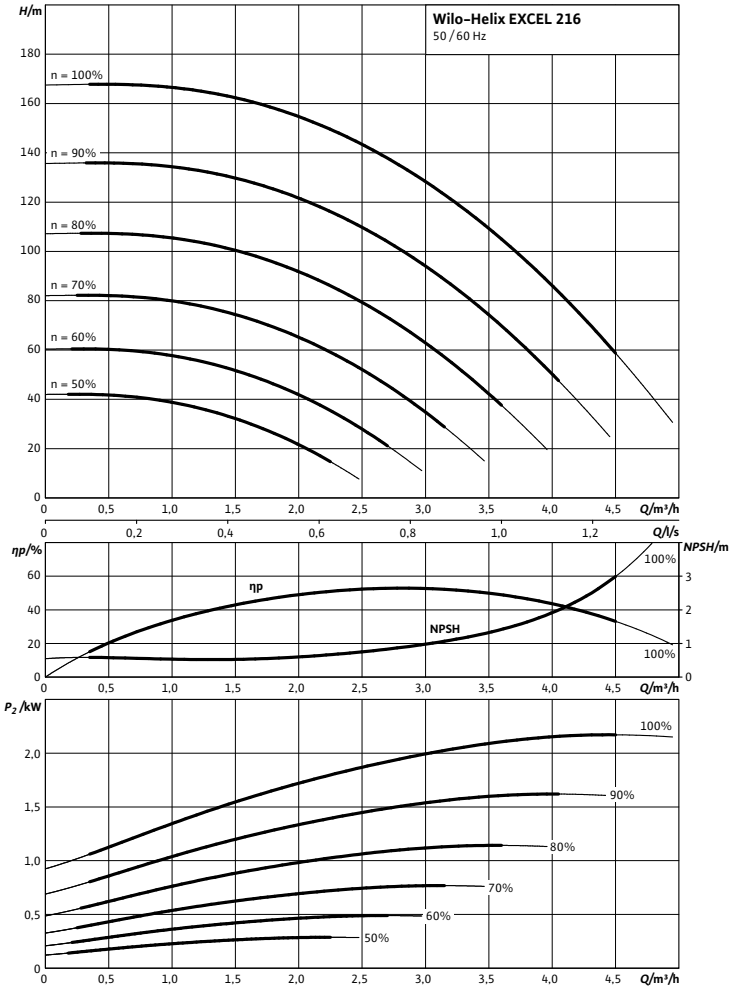

Motor data			
Wilo-...	**Nominal motor power**	**Nominal current 3~400 V, 50 Hz**	**Motor efficiency**
	P_2	I_N	$\eta_{m\,100\%}$
	kW	A	%
Helix EXCEL 216	2.20	4.80	93.0

Motor efficiency based on 400 V, 50 Hz

Dimensions, weights Wilo-Helix EXCEL 2

Dimension drawing

Helix EXCEL 2-4, PN 25

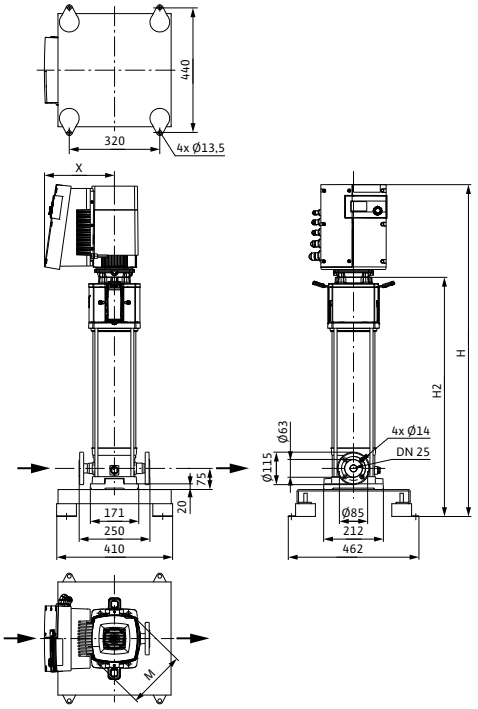

Dimensions, weights						
Wilo-...	**Maximum operating pressure**	**Dimensions**				**Weight approx.**
	p_{max}	*H*	*H2*	*Ø M*	*X*	*m*
	bar	mm				kg
Helix EXCEL 216	25	1175	847	206	248	58.5

Pump curves, motor data Wilo-Helix EXCEL 2

Wilo-Helix EXCEL 222

Minimum Efficiency Index (MEI): ≥ 0.7

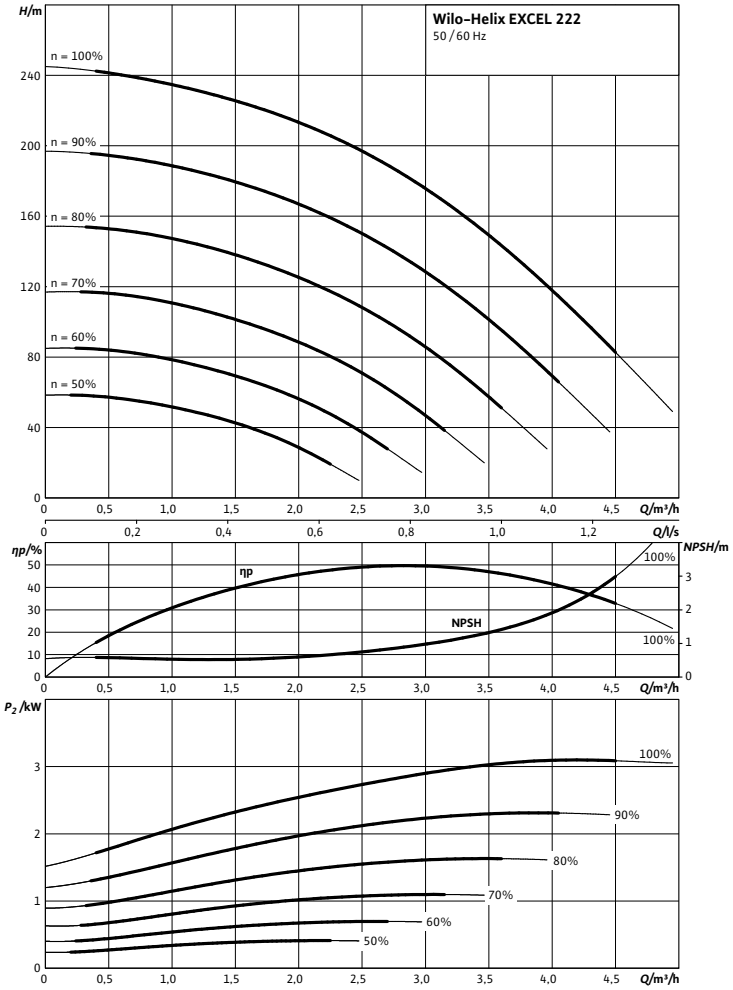

Motor data				
Wilo-...	**Nominal motor power**	**Nominal current 3~230 V, 50 Hz**	**Nominal current 3~400 V, 50 Hz**	**Motor efficiency**
	P_2	I_N		$\eta_{m\ 100\%}$
	kW	A		%
Helix EXCEL 222	3.20	–	6.40	93.0

Motor efficiency based on 400 V, 50 Hz

Dimensions, weights Wilo-Helix EXCEL 2

Dimension drawing

Helix EXCEL 2-4, PN 25

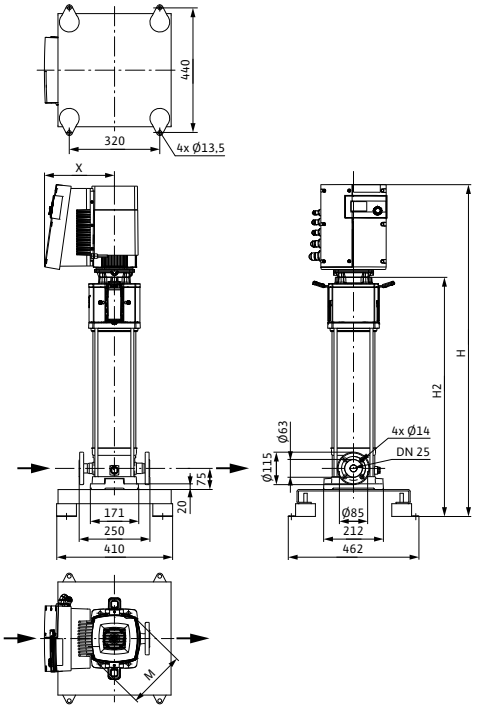

Dimensions, weights						
Wilo-...	**Maximum operating pressure**	**Dimensions**				**Weight approx.**
	p_{max}	*H*	*H2*	*Ø M*	*X*	*m*
	bar	mm				kg
Helix EXCEL 222	25	1385	1057	206	248	61.9

Pump curves, motor data Wilo-Helix EXCEL 4

Wilo-Helix EXCEL 410

Minimum Efficiency Index (MEI): ≥ 0.7

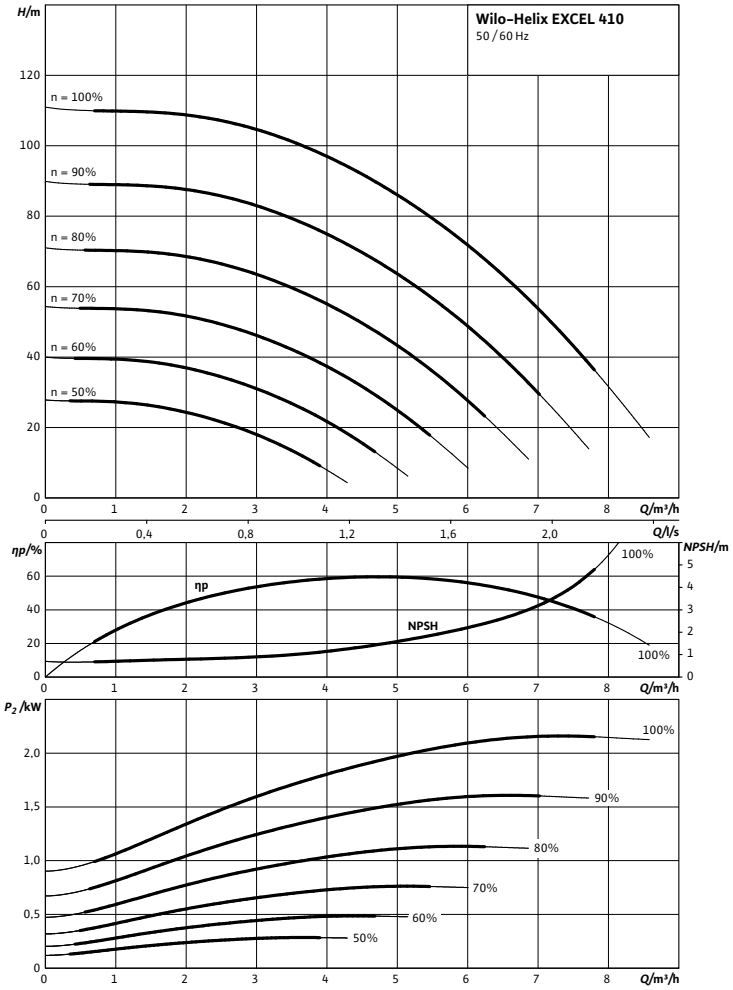

Motor data			
Wilo-...	**Nominal motor power**	**Nominal current 3~400 V, 50 Hz**	**Motor efficiency**
	P_2	I_N	$\eta_{m\,100\%}$
	kW	A	%
Helix EXCEL 410	2.20	4.80	93.0

Motor efficiency based on 400 V, 50 Hz

Dimensions, weights Wilo-Helix EXCEL 4

Dimension drawing

Helix EXCEL 2-4, PN 16

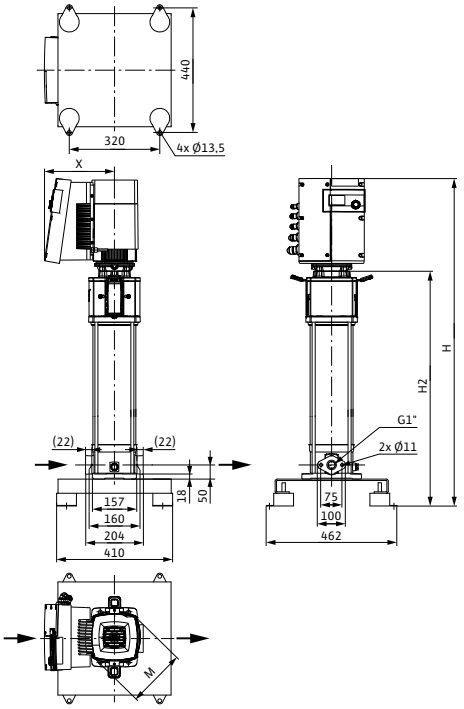

Dimension drawing

Helix EXCEL 2-4, PN 25

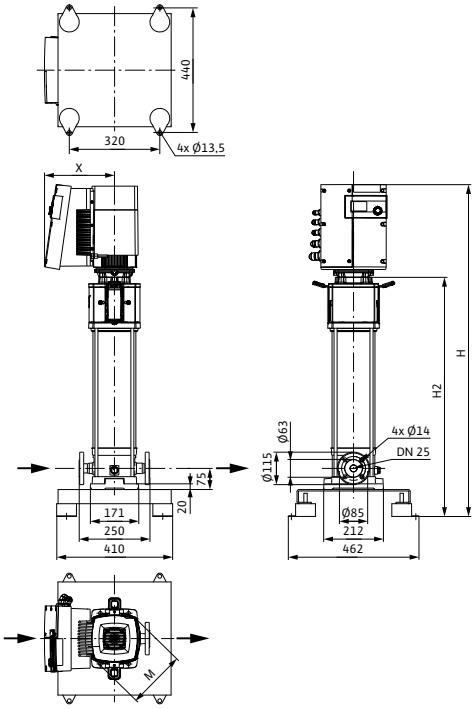

Dimensions, weights						
Wilo-...	**Maximum operating pressure**	**Dimensions**				**Weight approx.**
	p_{max}	*H*	*H2*	*Ø M*	*X*	*m*
	bar	mm				kg
Helix EXCEL 410	16	1004	676	206	248	52.5
Helix EXCEL 410	25	1029	701			55.5

Pump curves, motor data Wilo-Helix EXCEL 4

Wilo-Helix EXCEL 414

Minimum Efficiency Index (MEI): ≥ 0.7

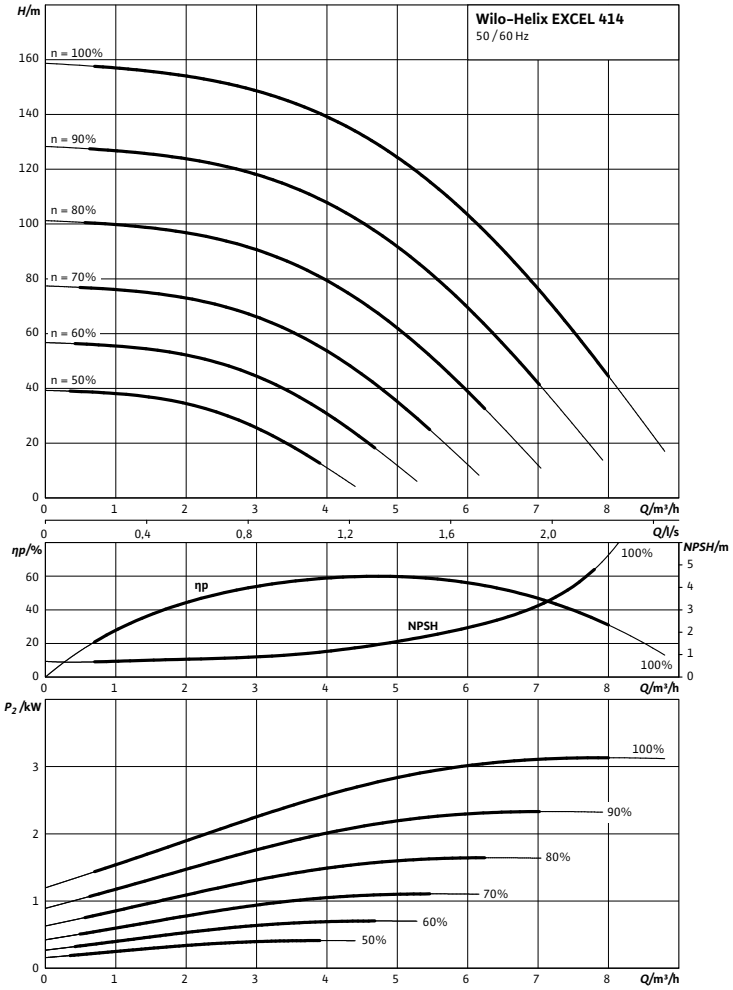

Motor data			
Wilo-...	**Nominal motor power**	**Nominal current 3~400 V, 50 Hz**	**Motor efficiency**
	P_2	I_N	$\eta_{m\,100\%}$
	kW	A	%
Helix EXCEL 414	3.20	6.40	93.0

Motor efficiency based on 400 V, 50 Hz

Dimensions, weights Wilo-Helix EXCEL 4

Dimension drawing

Helix EXCEL 2-4, PN 16

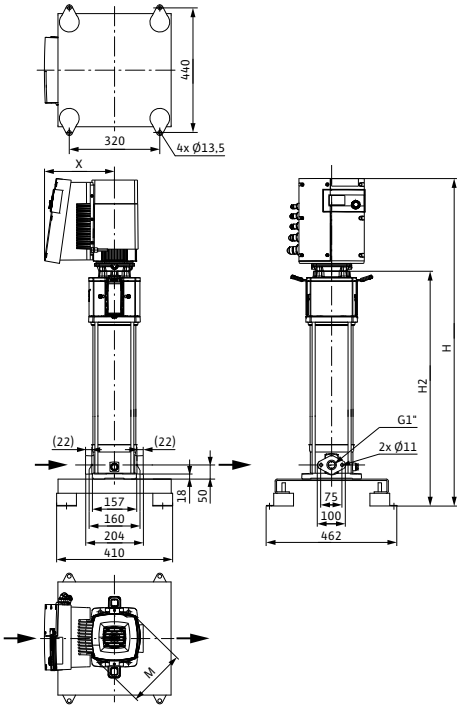

Dimension drawing

Helix EXCEL 2-4, PN 25

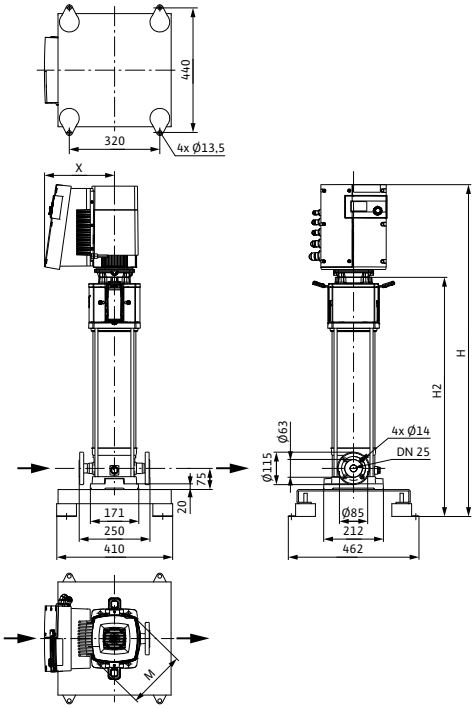

Dimensions, weights						
Wilo-...	**Maximum operating pressure**	**Dimensions**				**Weight approx.**
	p_{max}	*H*	*H2*	*Ø M*	*X*	*m*
	bar	mm				kg
Helix EXCEL 414	16	1104	776	206	248	54.9
Helix EXCEL 414	25	1129	801			56.9

Pump curves, motor data Wilo-Helix EXCEL 6

Wilo-Helix EXCEL 606

Minimum Efficiency Index (MEI): ≥ 0.7

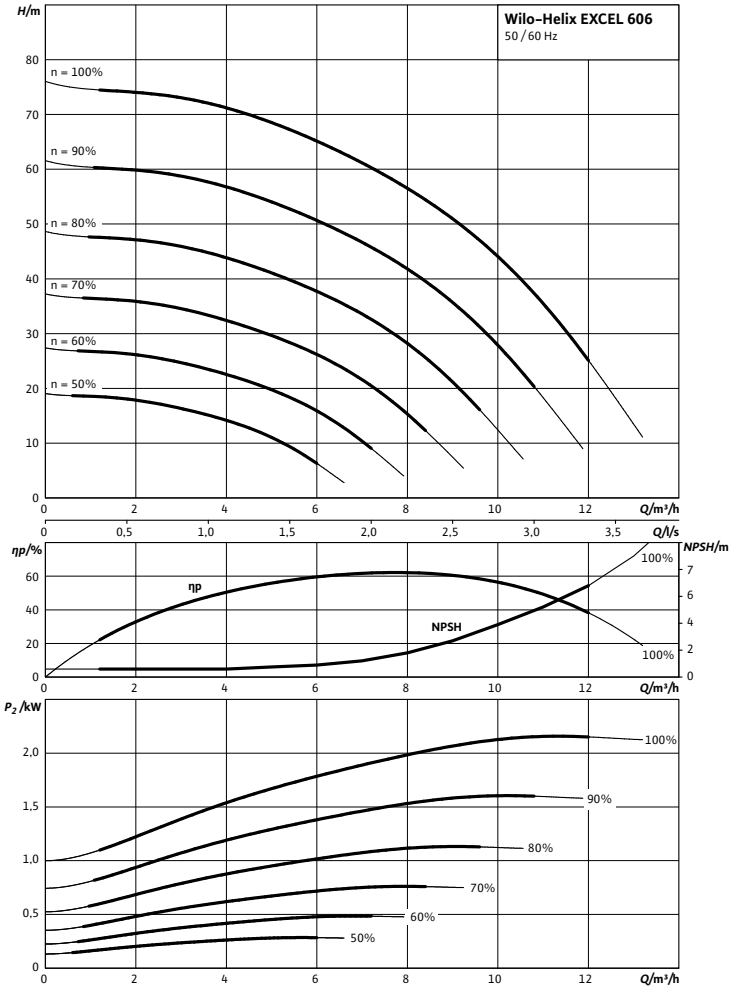

Motor data			
Wilo-...	**Nominal motor power**	**Nominal current 3~400 V, 50 Hz**	**Motor efficiency**
	P_2	I_N	$\eta_{m\,100\%}$
	kW	A	%
Helix EXCEL 606	2.20	4.80	93.0

Motor efficiency based on 400 V, 50 Hz

Dimensions, weights Wilo-Helix EXCEL 6

Dimension drawing

Helix EXCEL 6, PN 16

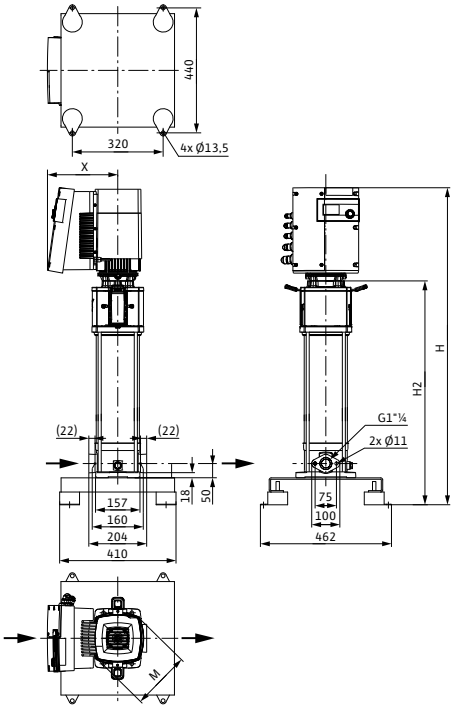

Dimension drawing

Helix EXCEL 6, PN 25

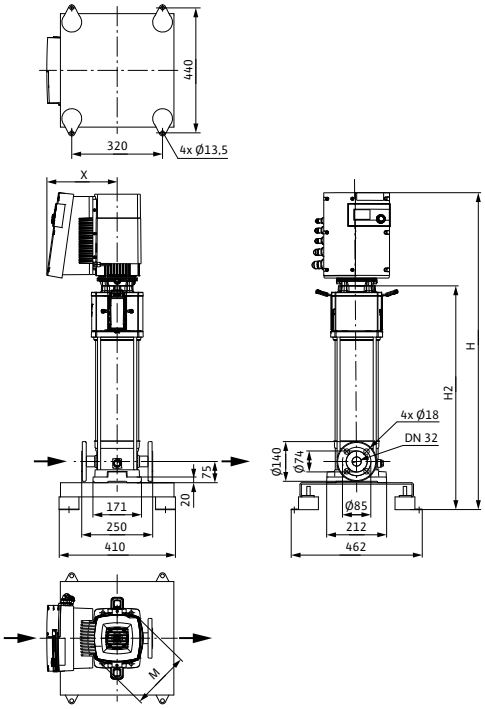

Dimensions, weights						
Wilo-...	**Maximum operating pressure**	**Dimensions**				**Weight approx.**
	p_{max}	*H*	*H2*	*Ø M*	*X*	*m*
	bar	mm				kg
Helix EXCEL 606	16	969	641	206	248	52.5
Helix EXCEL 606	25	1004	676			53.5

Pump curves, motor data Wilo-Helix EXCEL 6

Wilo-Helix EXCEL 609

Minimum Efficiency Index (MEI): ≥ 0.7

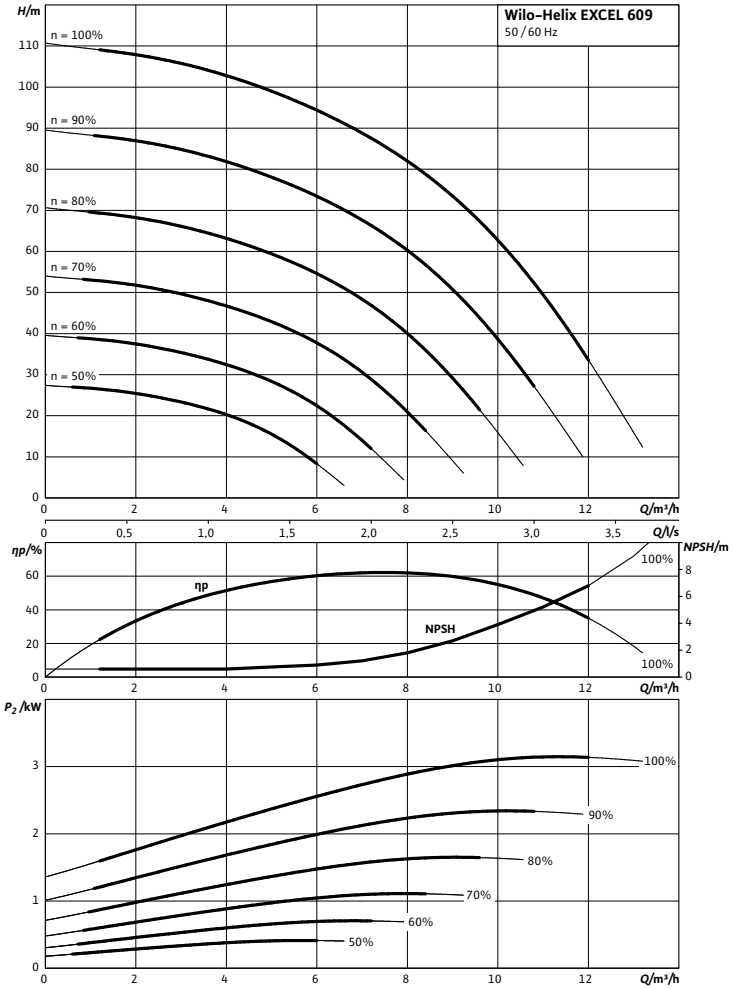

Motor data			
Wilo-...	**Nominal motor power**	**Nominal current 3~400 V, 50 Hz**	**Motor efficiency**
	P_2	I_N	$\eta_{m\,100\%}$
	kW	A	%
Helix EXCEL 609	3.20	6.40	93.0

Motor efficiency based on 400 V, 50 Hz

Dimensions, weights Wilo-Helix EXCEL 6

Dimension drawing

Helix EXCEL 6, PN 16

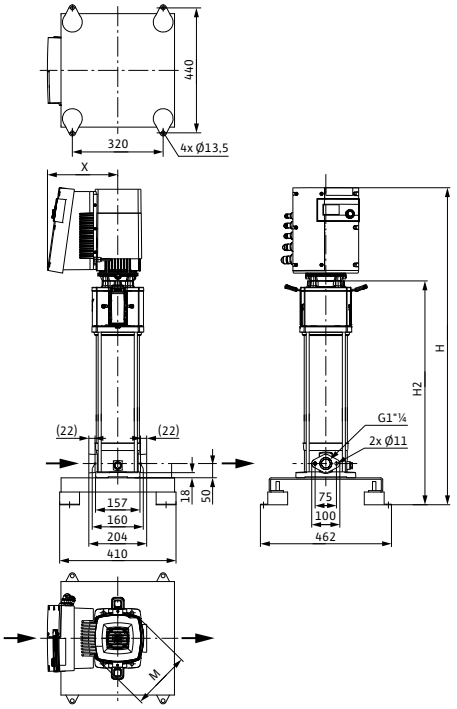

Dimension drawing

Helix EXCEL 6, PN 25

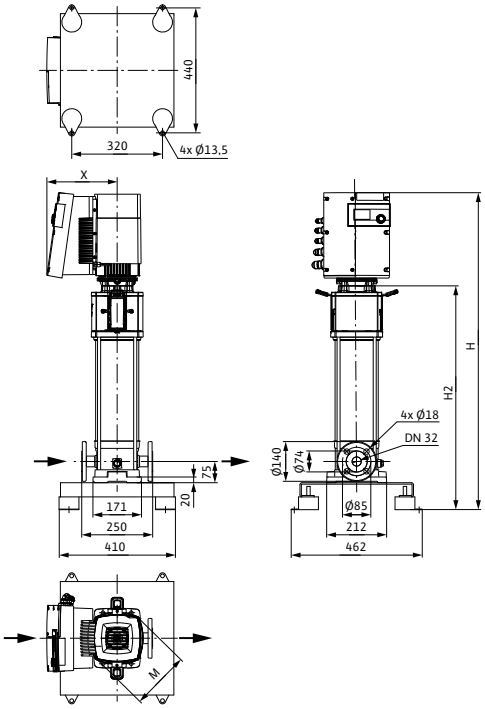

Dimensions, weights						
Wilo-...	**Maximum operating pressure**	**Dimensions**				**Weight approx.**
	p_{max}	*H*	*H2*	*Ø M*	*X*	*m*
	bar	mm				kg
Helix EXCEL 609	16	1092	764	206	248	54.9
Helix EXCEL 609	25	1117	789			56.9

Pump curves, motor data Wilo-Helix EXCEL 10

Wilo-Helix EXCEL 1004

Minimum Efficiency Index (MEI): ≥ 0.7

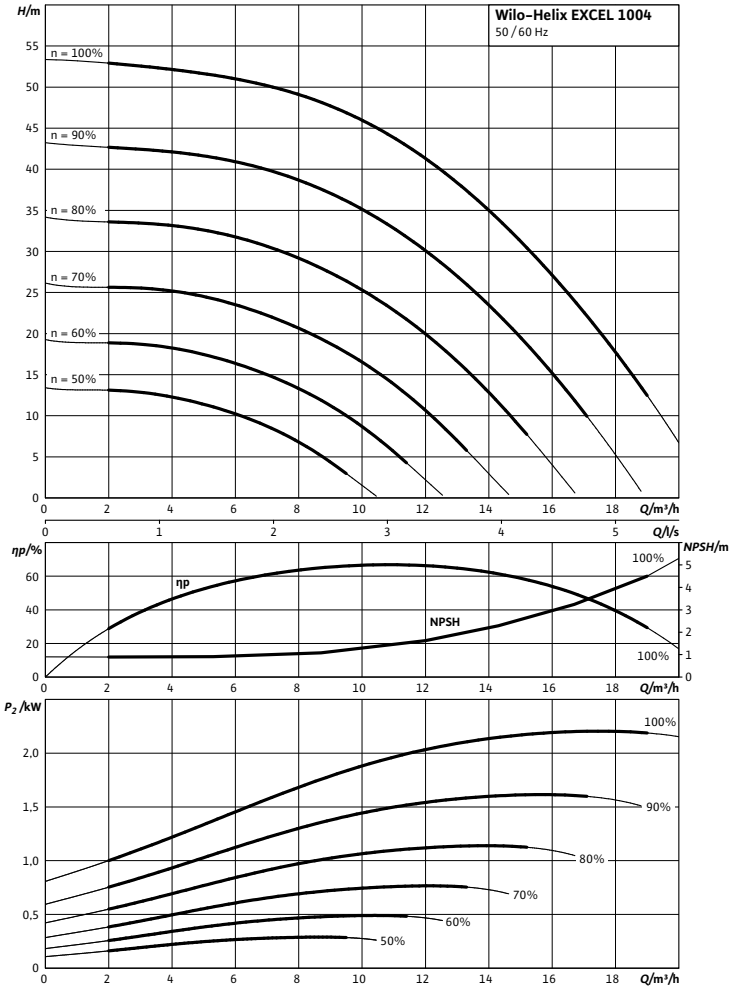

Motor data			
Wilo-...	**Nominal motor power**	**Nominal current 3~400 V, 50 Hz**	**Motor efficiency**
	P_2	I_N	$\eta_{m\,100\%}$
	kW	A	%
Helix EXCEL 1004	2.20	4.80	93.0

Motor efficiency based on 400 V, 50 Hz

Dimensions, weights Wilo-Helix EXCEL 10

Dimension drawing

Helix EXCEL 10, PN 16

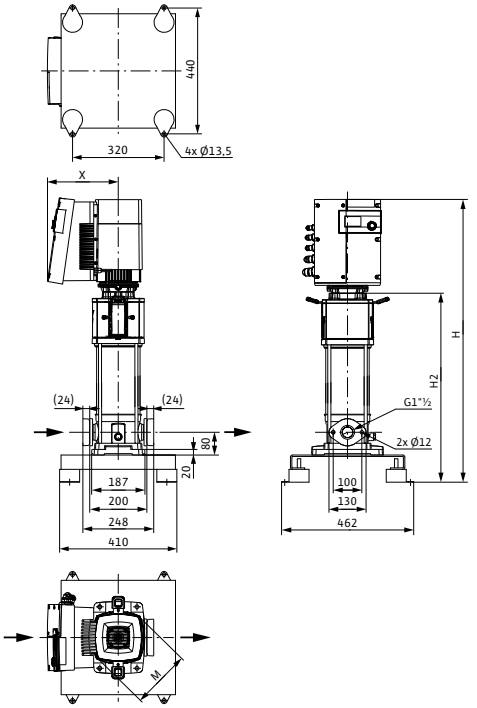

Dimension drawing

Helix EXCEL 10, PN 25

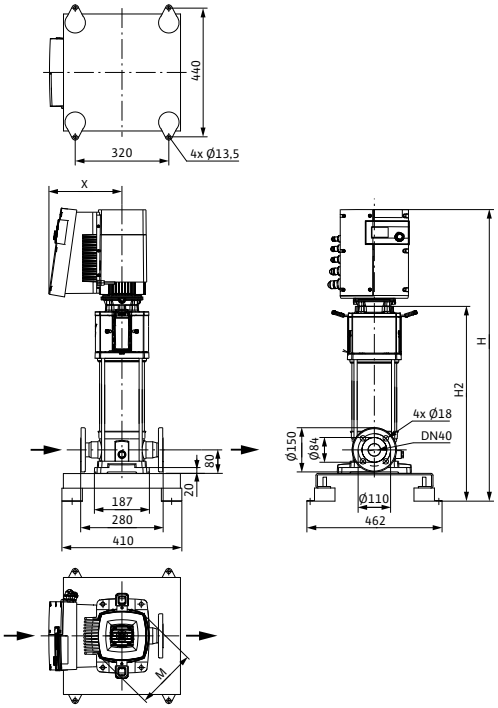

Dimensions, weights						
Wilo-...	**Maximum operating pressure**	**Dimensions**				**Weight approx.**
	p_{max}	*H*	*H2*	*Ø M*	*X*	*m*
	bar	mm				kg
Helix EXCEL 1004	16	925	597	206	248	53.9
Helix EXCEL 1004	25	925	597			53.9

Pump curves, motor data Wilo-Helix EXCEL 10

Wilo-Helix EXCEL 1005

Minimum Efficiency Index (MEI): ≥ 0.7

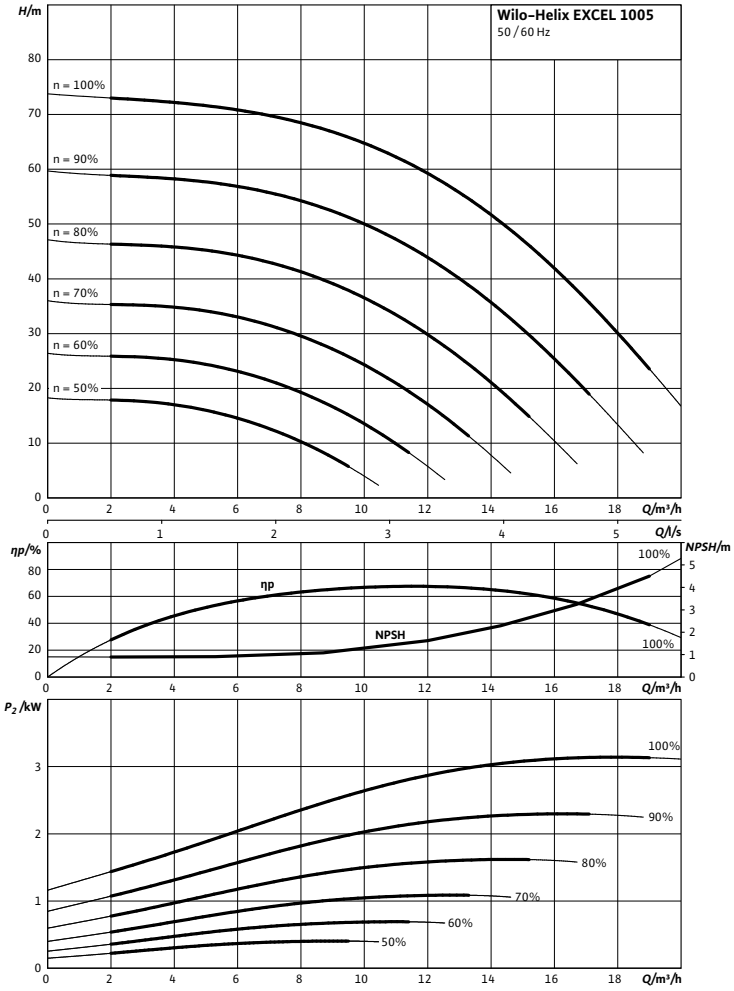

Motor data			
Wilo-...	**Nominal motor power**	**Nominal current 3~400 V, 50 Hz**	**Motor efficiency**
	P_2	I_N	$\eta_{m\,100\%}$
	kW	A	%
Helix EXCEL 1005	3.20	6.40	93.0

Motor efficiency based on 400 V, 50 Hz

Dimensions, weights Wilo-Helix EXCEL 10

Dimension drawing

Helix EXCEL 10, PN 16

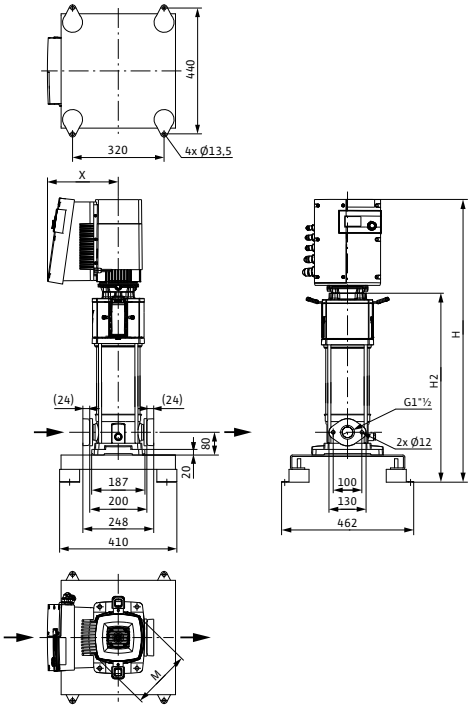

Dimension drawing

Helix EXCEL 10, PN 25

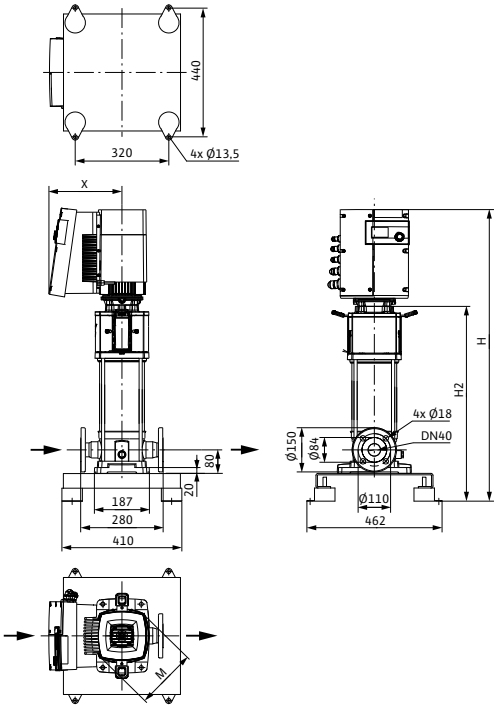

Dimensions, weights

Wilo-...	Maximum operating pressure	Dimensions				Weight approx.
	p_{max}	*H*	*H2*	*Ø M*	*X*	*m*
	bar	mm				kg
Helix EXCEL 1005	16	963	635	206	248	55.2
Helix EXCEL 1005	25	963	635			55.2

Pump curves, motor data Wilo-Helix EXCEL 16

Wilo-Helix EXCEL 1602

Minimum Efficiency Index (MEI): ≥ 0.7

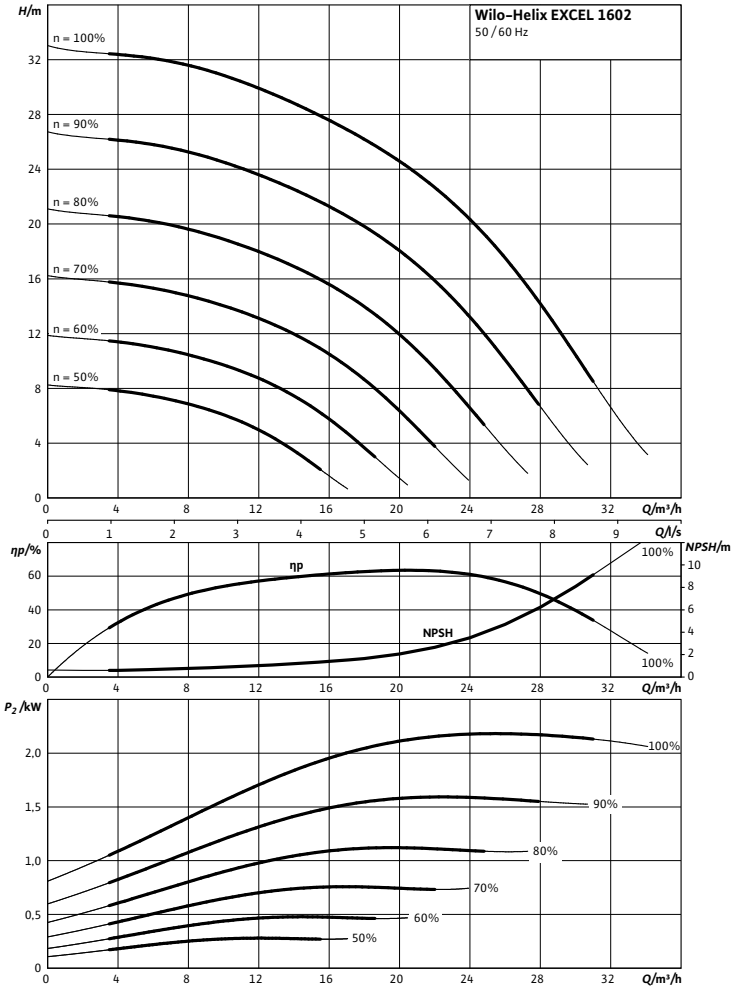

Motor data			
Wilo-...	**Nominal motor power**	**Nominal current 3~400 V, 50 Hz**	**Motor efficiency**
	P_2	I_N	$\eta_{m\,100\%}$
	kW	A	%
Helix EXCEL 1602	2.20	4.80	93.0

Motor efficiency based on 400 V, 50 Hz

Dimensions, weights Wilo-Helix EXCEL 16

Dimension drawing

Helix EXCEL 16, PN 16

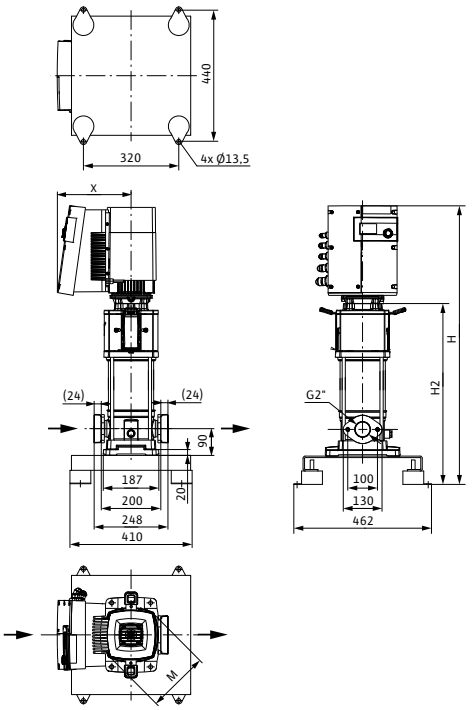

Dimension drawing

Helix EXCEL 16, PN 25

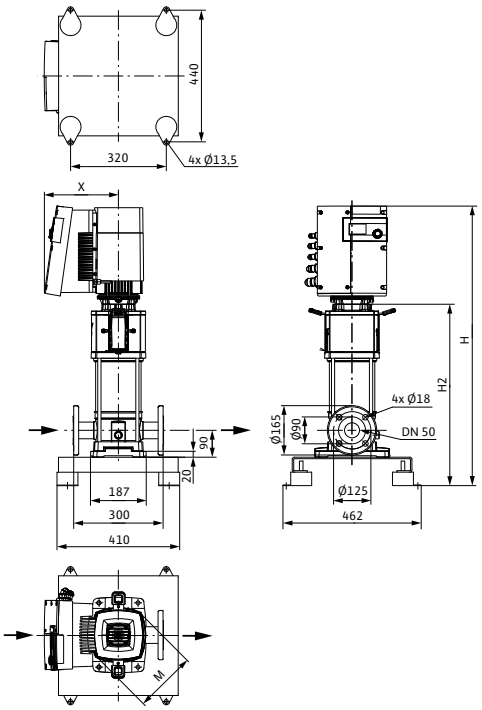

Dimensions, weights						
Wilo-...	**Maximum operating pressure**	**Dimensions**				**Weight approx.**
	p_{max}	*H*	*H2*	*Ø M*	*X*	*m*
	bar	mm				kg
Helix EXCEL 1602	16	885	557	206	248	55.5
Helix EXCEL 1602	25	885	557			55.5

Pump curves, motor data Wilo-Helix EXCEL 16

Wilo-Helix EXCEL 1603

Minimum Efficiency Index (MEI): ≥ 0.7

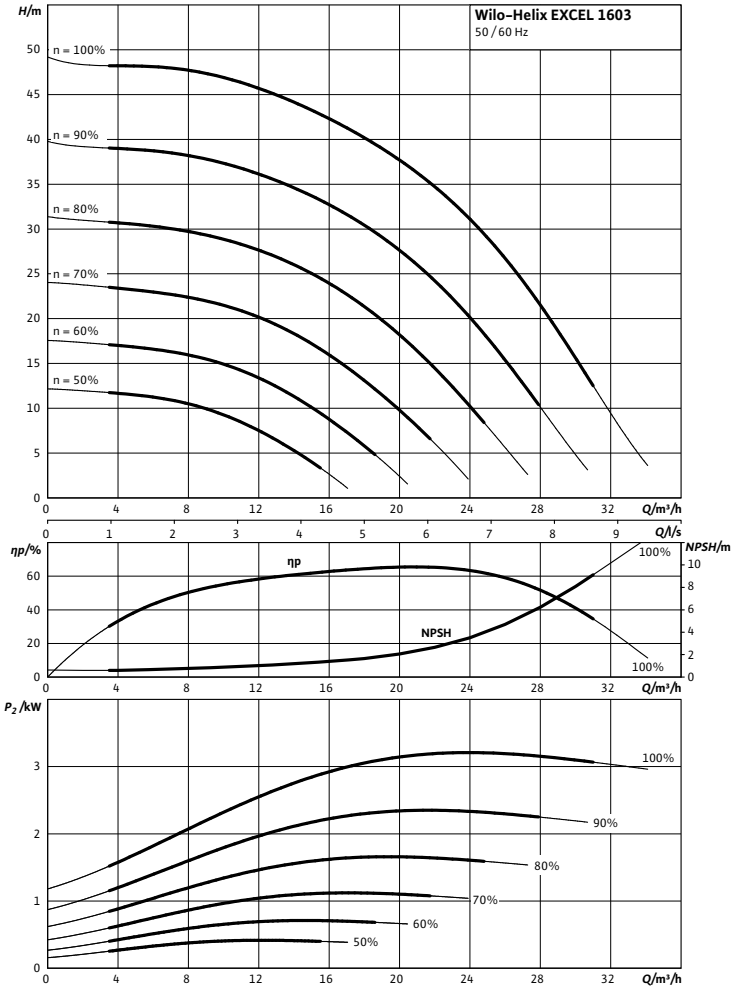

Motor data			
Wilo-...	**Nominal motor power**	**Nominal current 3~400 V, 50 Hz**	**Motor efficiency**
	P_2	I_N	$\eta_{m\,100\%}$
	kW	A	%
Helix EXCEL 1603	3.20	6.40	93.0

Motor efficiency based on 400 V, 50 Hz

Dimensions, weights Wilo-Helix EXCEL 16

Dimension drawing

Helix EXCEL 16, PN 16

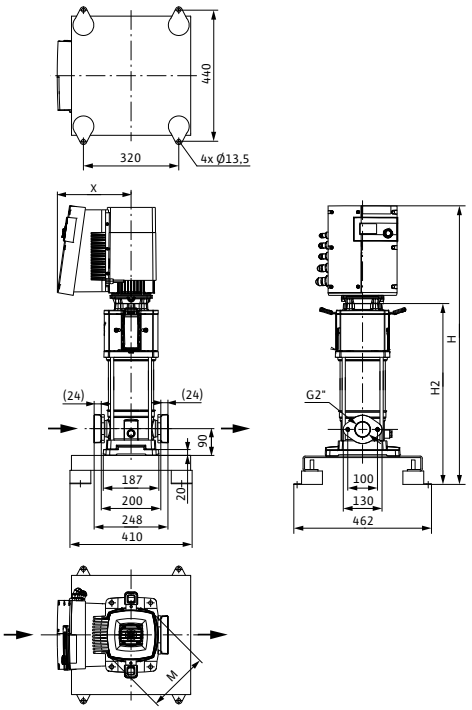

Dimension drawing

Helix EXCEL 16, PN 25

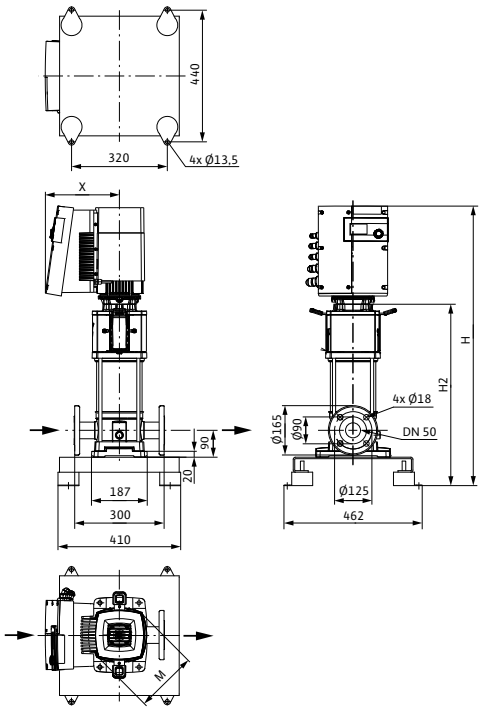

Dimensions, weights						
Wilo-...	**Maximum operating pressure**	**Dimensions**				**Weight approx.**
	p_{max}	*H*	*H2*	*Ø M*	*X*	*m*
	bar	mm				kg
Helix EXCEL 1603	16	935	607	206	248	56.9
Helix EXCEL 1603	25	935	607			56.9

Pump curves, motor data Wilo-Helix EXCEL 22

Wilo-Helix EXCEL 2201

Minimum Efficiency Index (MEI): ≥ 0.7

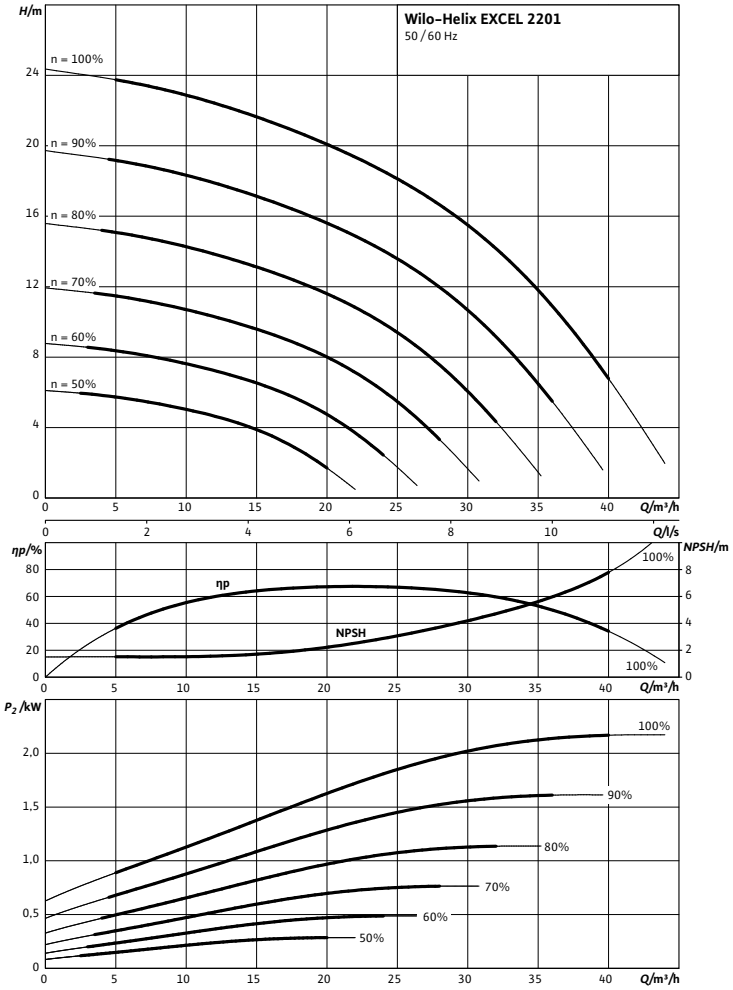

Motor data			
Wilo-...	**Nominal motor power**	**Nominal current 3~400 V, 50 Hz**	**Motor efficiency**
	P_2	I_N	$\eta_{m\,100\%}$
	kW	A	%
Helix EXCEL 2201	2.20	4.80	93.0

Motor efficiency based on 400 V, 50 Hz

Dimensions, weights Wilo-Helix EXCEL 22

Dimension drawing

Helix EXCEL 22

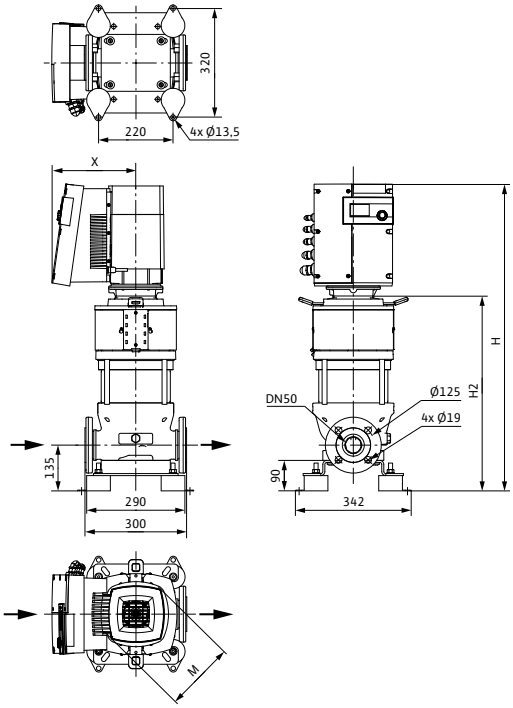

Dimensions, weights						
Wilo-...	**Maximum operating pressure**	**Dimensions**				**Weight approx.**
	p_{max}	*H*	*H2*	*Ø M*	*X*	*m*
	bar	mm				kg
Helix EXCEL 2201	16	913	586	206	248	67.5

Pump curves, motor data Wilo-Helix EXCEL 22

Wilo-Helix EXCEL 2202

Minimum Efficiency Index (MEI): ≥ 0.7

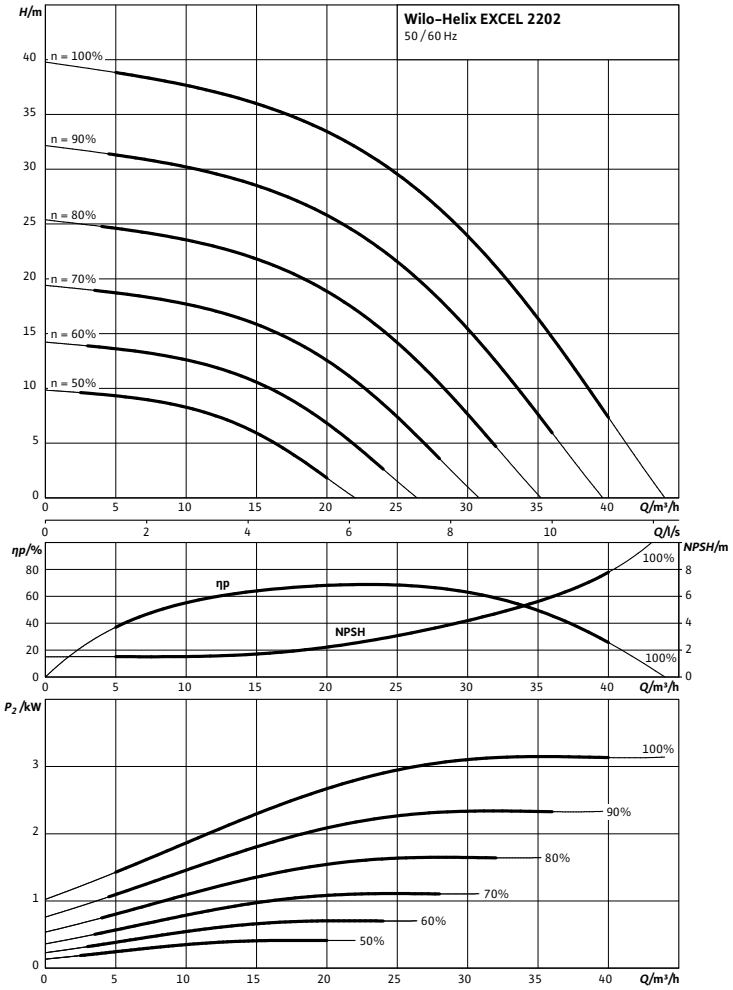

Motor data			
Wilo-...	**Nominal motor power**	**Nominal current 3~400 V, 50 Hz**	**Motor efficiency**
	P_2	I_N	$\eta_{m\,100\%}$
	kW	A	%
Helix EXCEL 2202	3.20	6.40	93.0

Motor efficiency based on 400 V, 50 Hz

Dimensions, weights Wilo-Helix EXCEL 22

Dimension drawing

Helix EXCEL 22

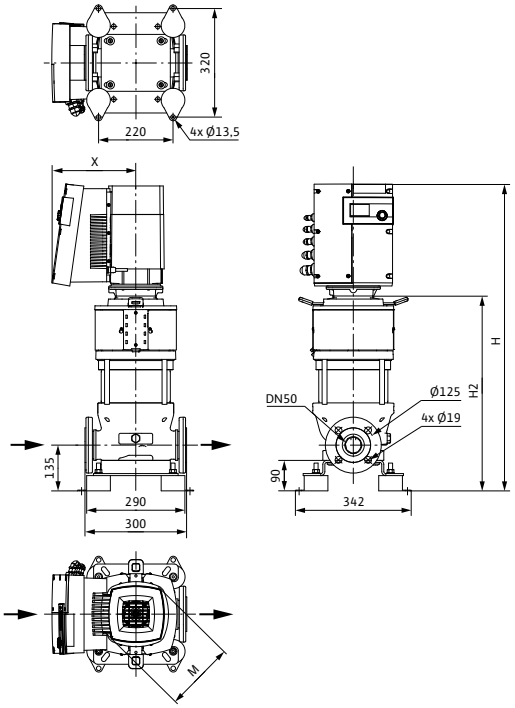

Dimensions, weights						
Wilo-...	**Maximum operating pressure**	**Dimensions**				**Weight approx.**
	p_{max}	*H*	*H2*	*Ø M*	*X*	*m*
	bar	mm				kg
Helix EXCEL 2202	16	913	585	206	248	77.1

Pump curves, motor data Wilo-Helix EXCEL 36

Wilo-Helix EXCEL 3601

Minimum Efficiency Index (MEI): ≥ 0.7

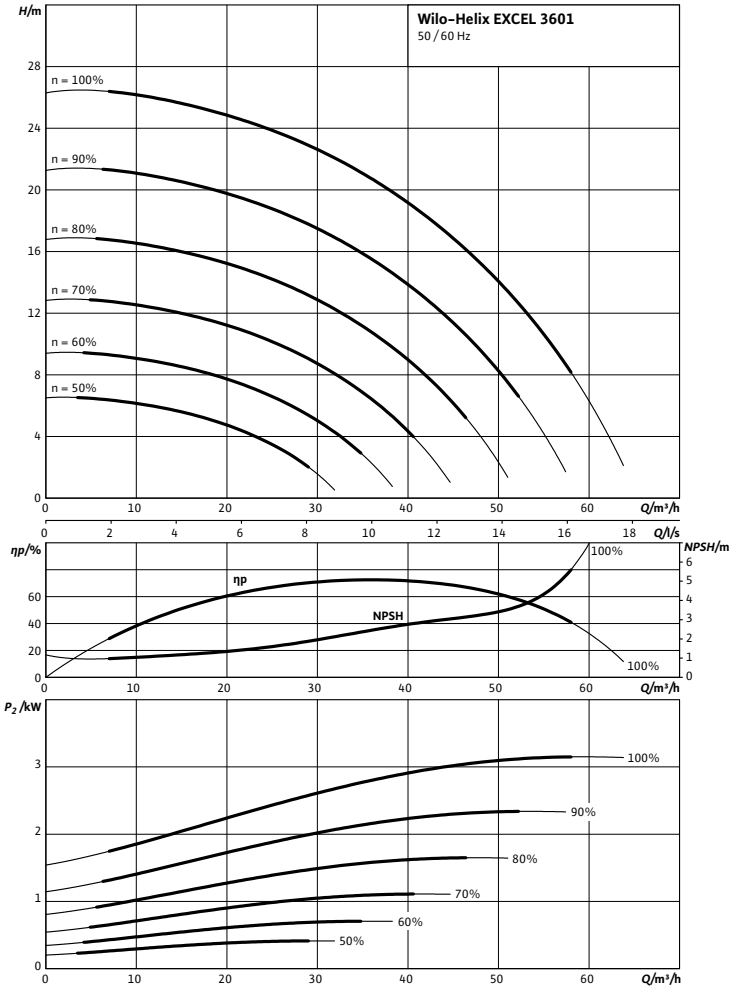

Motor data			
Wilo-...	**Nominal motor power**	**Nominal current 3~400 V, 50 Hz**	**Motor efficiency**
	P_2	I_N	$\eta_{m\,100\%}$
	kW	A	%
Helix EXCEL 3601	3.20	6.40	93.0

Motor efficiency based on 400 V, 50 Hz

Dimensions, weights Wilo-Helix EXCEL 36

Dimension drawing

Helix EXCEL 36

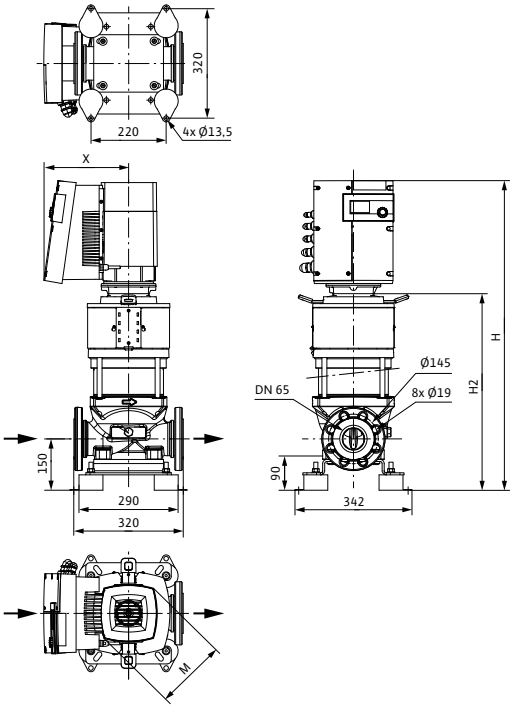

Dimensions, weights						
Wilo-...	**Maximum operating pressure**	**Dimensions**				**Weight approx.**
	p_{max}	*H*	*H2*	*Ø M*	*X*	*m*
	bar	mm				kg
Helix EXCEL 3601	16	895	567	206	248	75.9

Series description Wilo-Helix VE

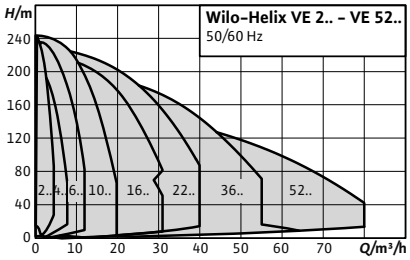

ErP READY APPLIES TO EUROPEAN DIRECTIVE FOR ENERGY RELATED PRODUCTS

Design
Electronically controlled, non-self-priming high-pressure multistage centrifugal pump in vertical design, with in-line connections

Application
- Water supply and pressure boosting
- Industrial circulation systems
- Process water
- Cooling water circuits
- Fire extinguishing systems
- Washing systems
- Irrigation

Version in stainless steel 1.44XX for aggressive media

Type key

Example:	**Helix VE 2202/2-3/16/E/3-2-2G**
Helix VE	Vertical high-pressure multistage centrifugal pump in in-line design (electronically controlled)
22	Flow rate in m^3/h
02	Number of impellers
2	Number of trimmed impellers (optional)
3	Pump material
	1 = Pump housing 1.4301 (AISI 304) Hydraulics 1.4307 (AISI 304L); [only Helix VE 16.. and smaller]
	2 = Pump housing 1.4409 (AISI 316L) Hydraulics 1.4404 (AISI 316L)
	3 = Pump housing EN-GJL-250 (cataphoretic-coated) Hydraulics 1.4307 (AISI 304L); [only Helix VE 22.. and larger]
16	Maximum operating pressure in bar
	16 = 16 bar (PN 16 flange)
	25 = 25 bar (PN 25 flange)
E	Gasket type E = EPDM V = FKM
3	3~
2	2-pole
2G	Frequency converter, second generation

Special features/product advantages
- Energy savings due to integrated frequency converter with wide control range
- IEC three-phase AC motor (level IE2)
- Control modes: Speed control, constant pressure and PID
- Optional interfaces for BUS communication via plug-in IF-modules
- Efficiency-optimised, laser-welded 2D/3D high-efficiency hydraulics
- The entire Helix series is equipped with a user-friendly X-Seal cartridge mechanical seal (with standard gasket) which allows fast and easy maintenance

Series description Wilo-Helix VE

- The spacer coupling allows the mechanical seal to be replaced without removing the motor (from 7.5 kW)
- WRAS/ACS approval for all parts that come in contact with the fluid (EPDM version)

Equipment/function
- Impellers, diffusors and stage housings made of corrosion-resistant material

Technical data
- Electrical connection: 3~400V/480 V (±10 %), 50/60 Hz, 3~380 V (±10 %), 60 Hz
- Fluid temperature range:
  - Helix VE 2 – 16 (EPDM): -30 to 120 °C
  - Helix VE 2 – 16 (FKM): -15 to 90 °C
  - Helix VE22 – 52 (EPDM): -20 to 120 °C
  - Helix VE22 – 52 for aggressive media (FKM): -15 to 90 °C (-30 to 120 °C with EPDM gasket on request)
- Max. operating pressure: 16/25 bar
- Protection class: IP 55
- Max. ambient temperature: +40°C (extended temperature ranges on request)
- Available versions:
  - Helix VE 2 – 16: PN 16 with oval flanges, PN 25 with round flanges in accordance with ISO 2531 and ISO 7005
  - Helix VE 22 – 52: PN 16 and PN 25 with round flanges in accordance with ISO 2531 and ISO 7005

Materials
Helix VE 2, 4, 6, 10, 16:
Standard version
- Impellers, stage housings and diffusors of stainless steel 1.4307
- Pump housing of stainless steel 1.4301
- Baseplate and lantern EN-GJL-250 (cataphoretic coated)
- Shaft of stainless steel 1.4301 or 1.4462 (depending on version)
- Sleeve under the mechanical seal 1.4404
- O-ring of EPDM (FKM gasket on request)
- Jacket pipe of stainless steel 1.4301

For aggressive media
- Impellers, stage housings and diffusors of stainless steel 1.4404
- Pump housing of stainless steel 1.4404
- Shaft of stainless steel 1.4404 or 1.4462 (depending on version)
- Sleeve under the mechanical seal 1.4404
- O-ring of EPDM (FKM gasket on request)
- Jacket pipe of stainless steel 1.4404

Helix VE 22, 36, 52:
Standard version
- Stage housings, impellers, diffusors of stainless steel 1.4307
- Pump housing of cataphoretic-coated grey cast iron EN-GJL 250, loose flanges of EN-GJS 400 for Helix VE 36-52.
- Shaft of stainless steel 1.4057
- Sleeve under the mechanical seal 1.4404
- O-ring of EPDM (FKM gasket on request)
- Jacket pipe of stainless steel 1.4301

For aggressive media
- Stage housings, impellers, diffusors of stainless steel 1.4404 with passivation for highest possible resistance to corrosion
- Pump housing: all parts which come in contact with the media are made of cast stainless steel 1.4409; loose flanges of cataphoretic-coated grey cast iron EN-GJL 250 for Helix VE 22 / EN-GJS 400 for Helix EXCEL 36-52.
- Baseplate of stainless steel 1.4301
- Shaft of stainless steel 1.4404 or 1.4462 (depending on version)
- Sleeve under the mechanical seal 1.4404
- O-ring of FKM (EPDM gasket on request)
- Pressure shroud of stainless steel 1.4404

Scope of delivery
- Helix VE high-pressure multistage centrifugal pump
- Helix VE 2 – 16: Oval counter flanges with corresponding screws and O-rings (PN16 variant) or bolts and gaskets if a counter flange is used (PN25 variant with round flanges)
- Helix VE 22 – 52: Bolts and gaskets if a counter flange is used (PN16 and PN25 with round flanges)
- Installation and operating instructions
- Integrated funnel to make it easier to fill the pump (Helix VE 2 – 16 only)

General notes - ErP (ecological design-) directive
- The benchmark for most efficient water pumps is MEI ≥ 0.70
- The efficiency of a pump with a trimmed impeller is usually lower than that of a pump with the full impeller diameter. The trimming of the impeller will adapt the pump to a fixed duty point, leading to reduced energy consumption. The minimum efficiency index (MEI) is based on the full impeller diameter.
- The operation of this water pump with variable duty points may be more efficient and economic when controlled, for example, by the use of a variable speed drive that matches the pump duty to the system.
- Information on benchmark efficiency is available at **www.europump.org/efficiencycharts**

Series description Wilo-Helix VE

Electrical connection

3~400 V ≤ 7.5 kW

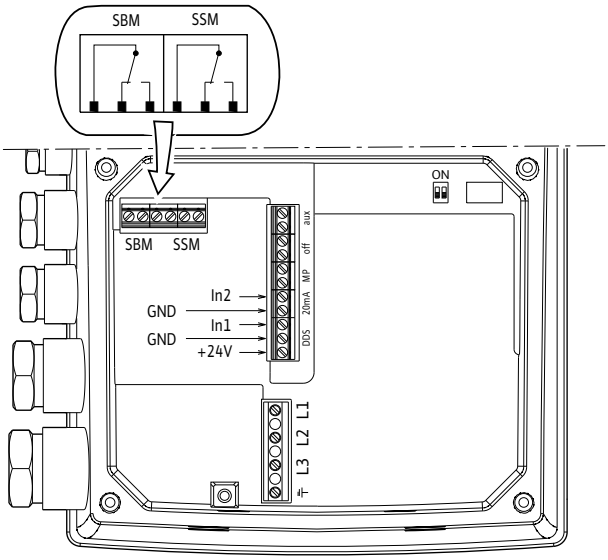

Electrical connection

3~400 V ≤ 11 kW

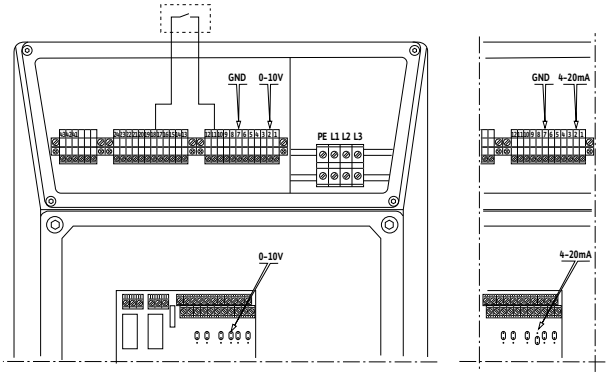

Pump curves, motor data Wilo-Helix VE

Wilo-Helix VE 204

Minimum Efficiency Index (MEI): ≥ 0.7

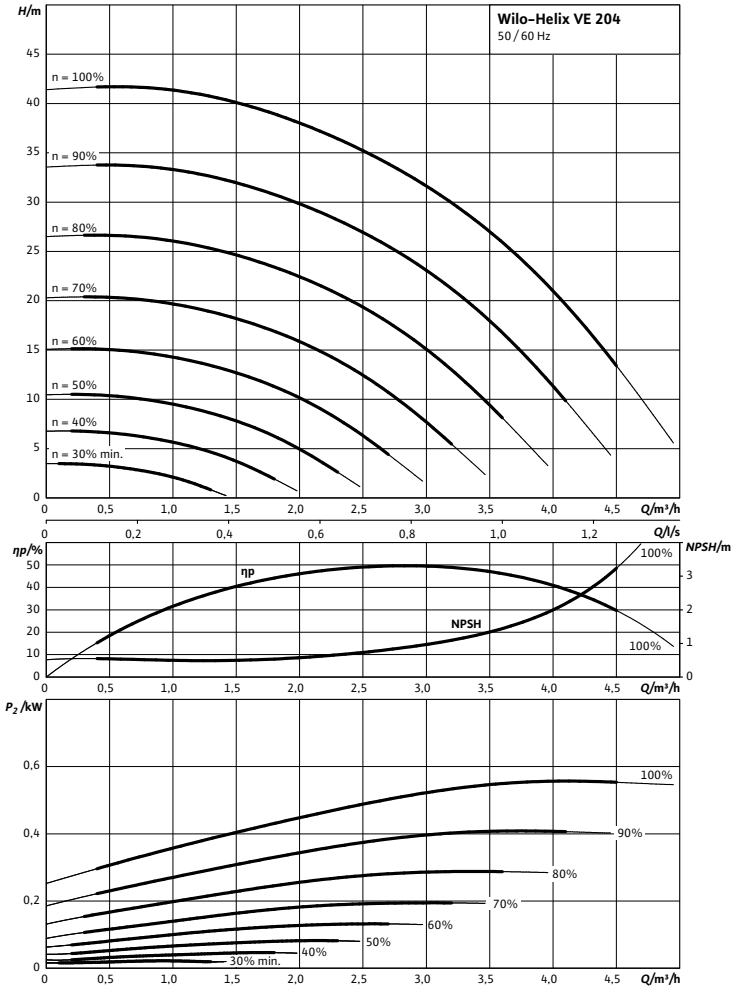

Pump curves in accordance with ISO 9906, class 2

Motor data					
Wilo-Helix...	**Nominal motor power**	**Nominal current 3~400 V, 50 Hz**	**Motor efficiency**		
	P_2	I_N	$\eta_{m\ 50\%}$	$\eta_{m\ 75\%}$	$\eta_{m\ 100\%}$
	kW	A	%		
Helix VE 204	0.55	1.70	74.0	78.0	79.0

Motor efficiency based on 400 V, 50 Hz

Dimensions, weights Wilo-Helix VE

Dimension drawing

Helix VE 2-4, PN 16

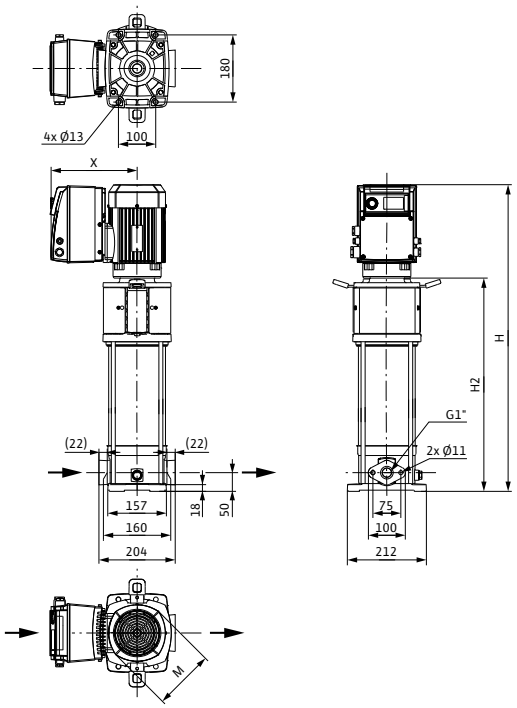

Dimension drawing

Helix VE 2-4, PN 25

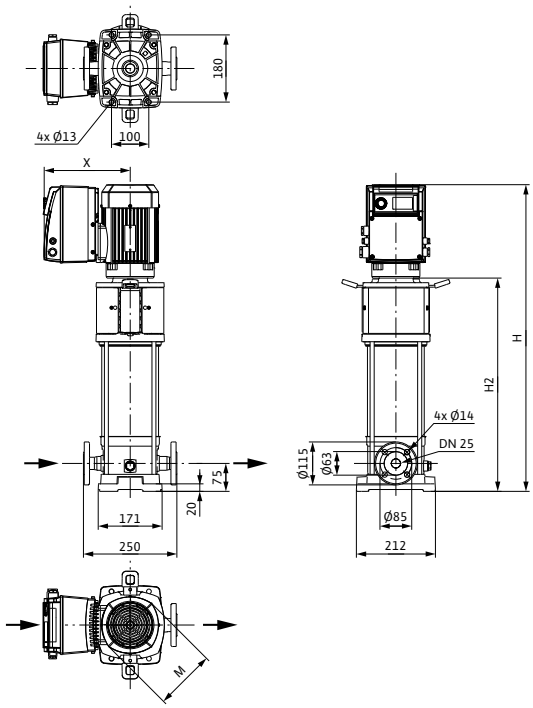

Dimensions, weights						
Wilo-Helix...	**Maximum operating pressure**	**Dimensions**				**Weight approx.**
	p_{max}	*H*	*H2*	*Ø M*	*X*	*m*
	bar	mm				kg
Helix VE 204	16	645	421	130	229	31
Helix VE 204	25	666	442			33

Pump curves, motor data Wilo-Helix VE

Wilo-Helix VE 206

Minimum Efficiency Index (MEI): ≥ 0.7

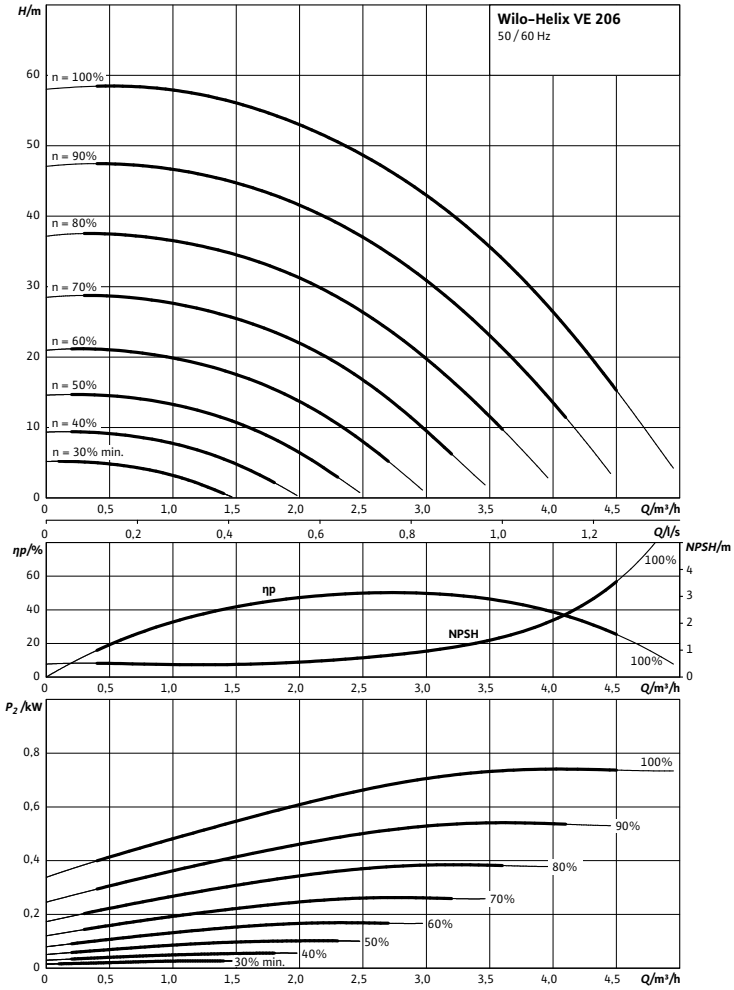

Pump curves in accordance with ISO 9906, class 2

Motor data					
Wilo-Helix...	**Nominal motor power**	**Nominal current 3~400 V, 50 Hz**	**Motor efficiency**		
	P_2	I_N	$\eta_{m\ 50\%}$	$\eta_{m\ 75\%}$	$\eta_{m\ 100\%}$
	kW	A	%		
Helix VE 206	0.75	3.20	74.0	78.0	79.0

Motor efficiency based on 400 V, 50 Hz

Dimensions, weights Wilo-Helix VE

Dimension drawing

Helix VE 2-4, PN 16

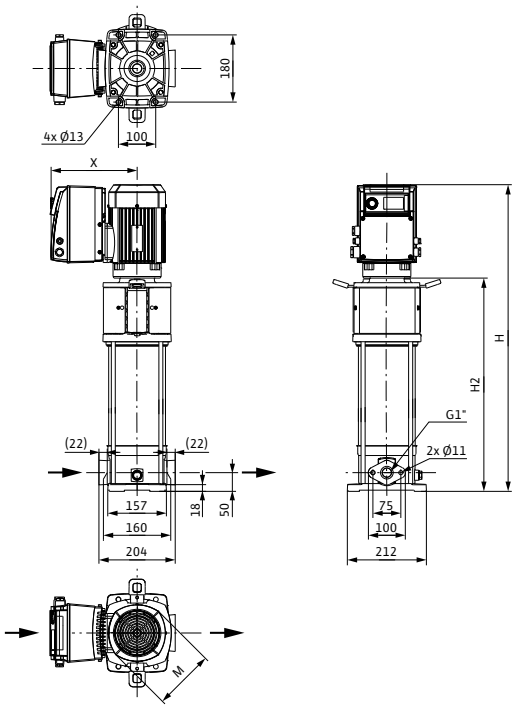

Dimension drawing

Helix VE 2-4, PN 25

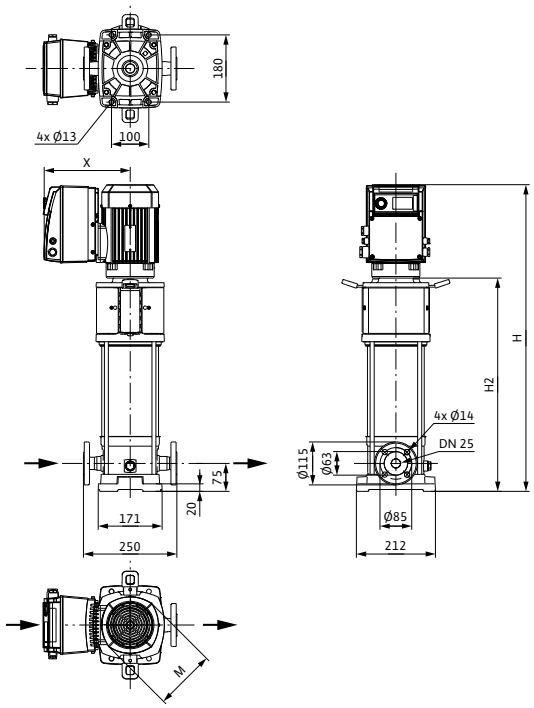

Dimensions, weights						
Wilo-Helix...	**Maximum operating pressure**	**Dimensions**				**Weight approx.**
	p_{max}	*H*	*H2*	*Ø M*	*X*	*m*
	bar	mm				kg
Helix VE 206	16	715	471	146	237	33
Helix VE 206	25	736	492			36

Pump curves, motor data Wilo-Helix VE

Wilo-Helix VE 208

Minimum Efficiency Index (MEI): ≥ 0.7

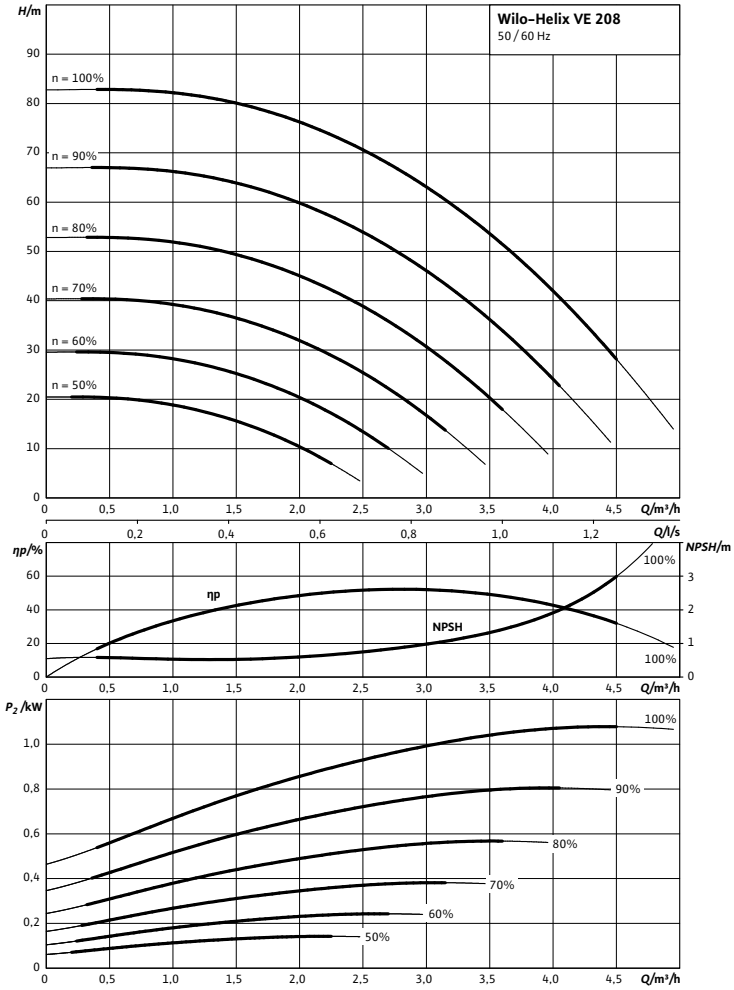

Pump curves in accordance with ISO 9906, class 2

Motor data					
Wilo-Helix...	**Nominal motor power**	**Nominal current 3~400 V, 50 Hz**	**Motor efficiency**		
	P_2	I_N	$\eta_{m\ 50\%}$	$\eta_{m\ 75\%}$	$\eta_{m\ 100\%}$
	kW	A	%		
Helix VE 208	1.10	3.20	79.0	82.0	82.5

Motor efficiency based on 400 V, 50 Hz

Dimensions, weights Wilo-Helix VE

Dimension drawing

Helix VE 2-4, PN 16

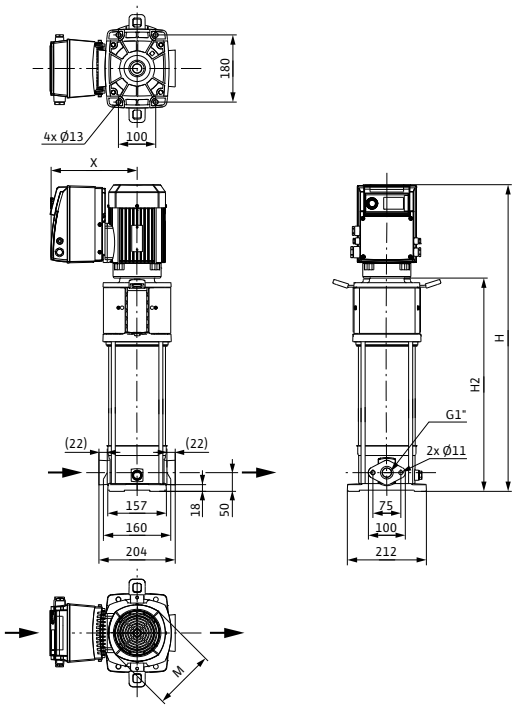

Dimension drawing

Helix VE 2-4, PN 25

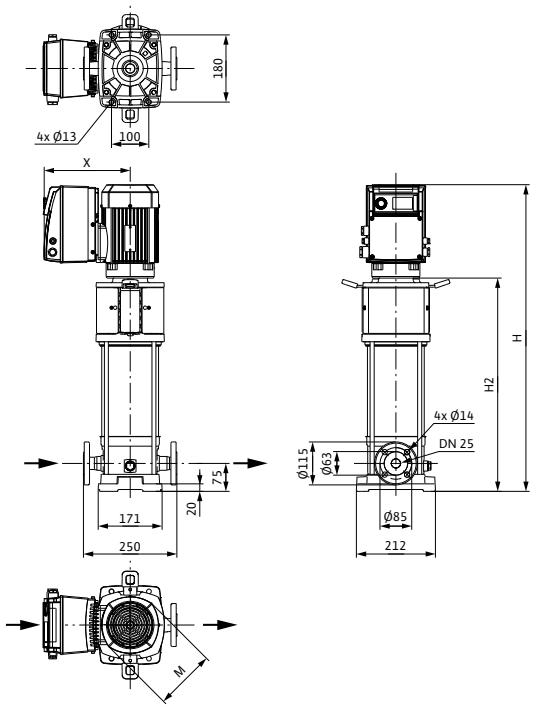

Dimensions, weights						
Wilo-Helix...	**Maximum operating pressure**	**Dimensions**				**Weight approx.**
	p_{max}	*H*	*H2*	*Ø M*	*X*	*m*
	bar	mm				kg
Helix VE 208	16	761	521	146	237	34
Helix VE 208	25	782	542			37

Pump curves, motor data Wilo-Helix VE

Wilo-Helix VE 211

Minimum Efficiency Index (MEI): ≥ 0.7

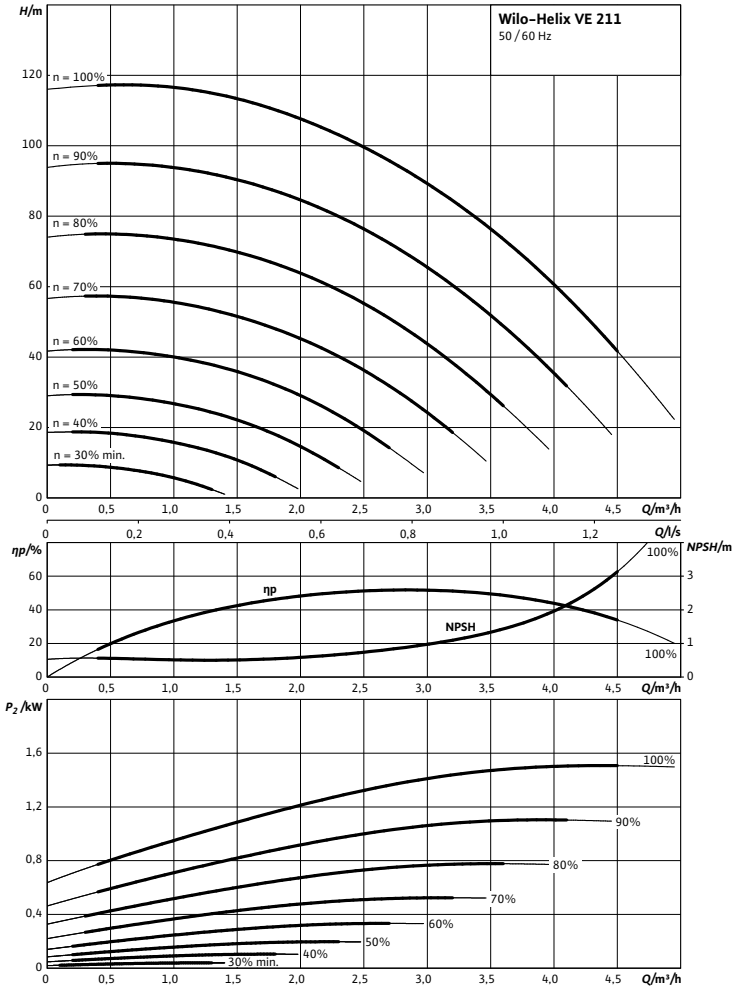

Pump curves in accordance with ISO 9906, class 2

Motor data					
Wilo-Helix...	**Nominal motor power**	**Nominal current 3~400 V, 50 Hz**	**Motor efficiency**		
	P_2	I_N	$\eta_{m\ 50\%}$	$\eta_{m\ 75\%}$	$\eta_{m\ 100\%}$
	kW	A	%		
Helix VE 211	1.50	5.60	79.0	82.0	84.0

Motor efficiency based on 400 V, 50 Hz

Dimensions, weights Wilo-Helix VE

Dimension drawing

Helix VE 2-4, PN 16

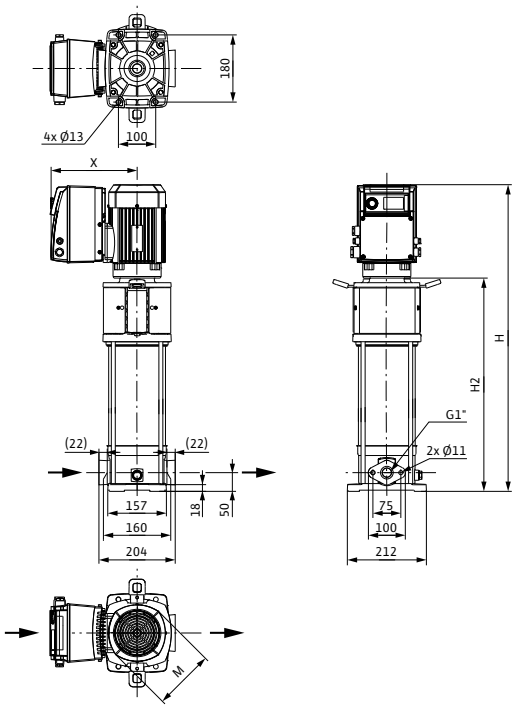

Dimension drawing

Helix VE 2-4, PN 25

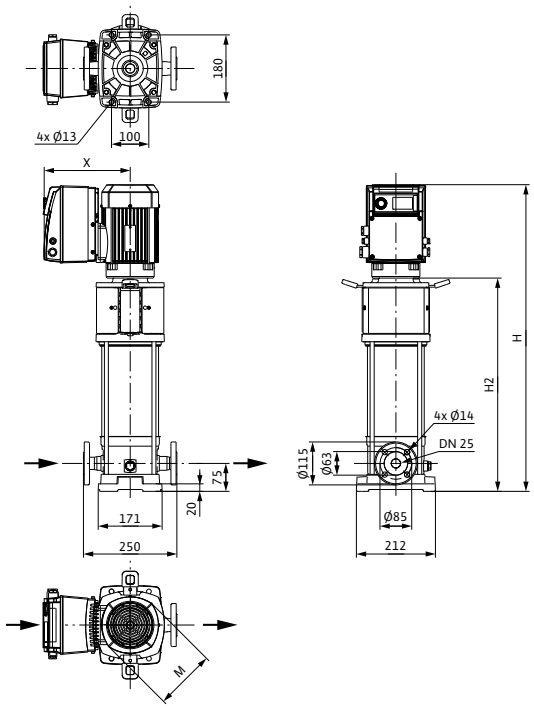

Dimensions, weights						
Wilo-Helix...	**Maximum operating pressure**	**Dimensions**				**Weight approx.**
	p_{max}	*H*	*H2*	*Ø M*	*X*	*m*
	bar	mm				kg
Helix VE 211	16	885	606	193	254	45
Helix VE 211	25	906	627			47

Pump curves, motor data Wilo-Helix VE

Wilo-Helix VE 216

Minimum Efficiency Index (MEI): ≥ 0.7

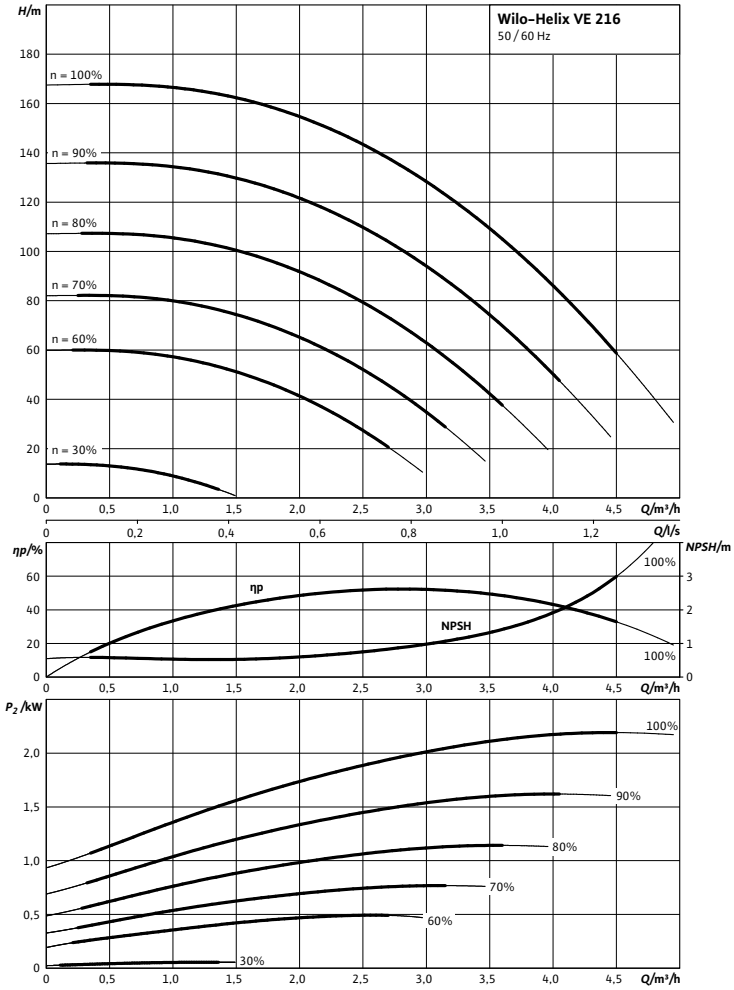

Pump curves in accordance with ISO 9906, class 2

Motor data					
Wilo-Helix...	**Nominal motor power**	**Nominal current 3~400 V, 50 Hz**	**Motor efficiency**		
	P_2	I_N	$\eta_{m\ 50\%}$	$\eta_{m\ 75\%}$	$\eta_{m\ 100\%}$
	kW	A	%		
Helix VE 216	2.20	5.60	81.0	84.0	85.5

Motor efficiency based on 400 V, 50 Hz

Dimensions, weights Wilo-Helix VE

Dimension drawing

Helix VE 2-4, PN 25

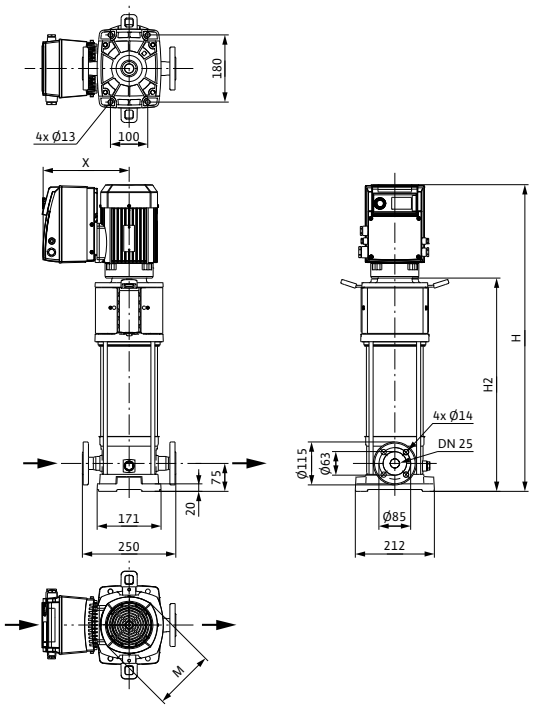

Dimensions, weights						
Wilo-Helix...	**Maximum operating pressure**	**Dimensions**				**Weight approx.**
	p_{max}	*H*	*H2*	*Ø M*	*X*	*m*
	bar	mm				kg
Helix VE 216	25	1036	752	170	254	50

Pump curves, motor data Wilo-Helix VE

Wilo-Helix VE 220

Minimum Efficiency Index (MEI): ≥ 0.7

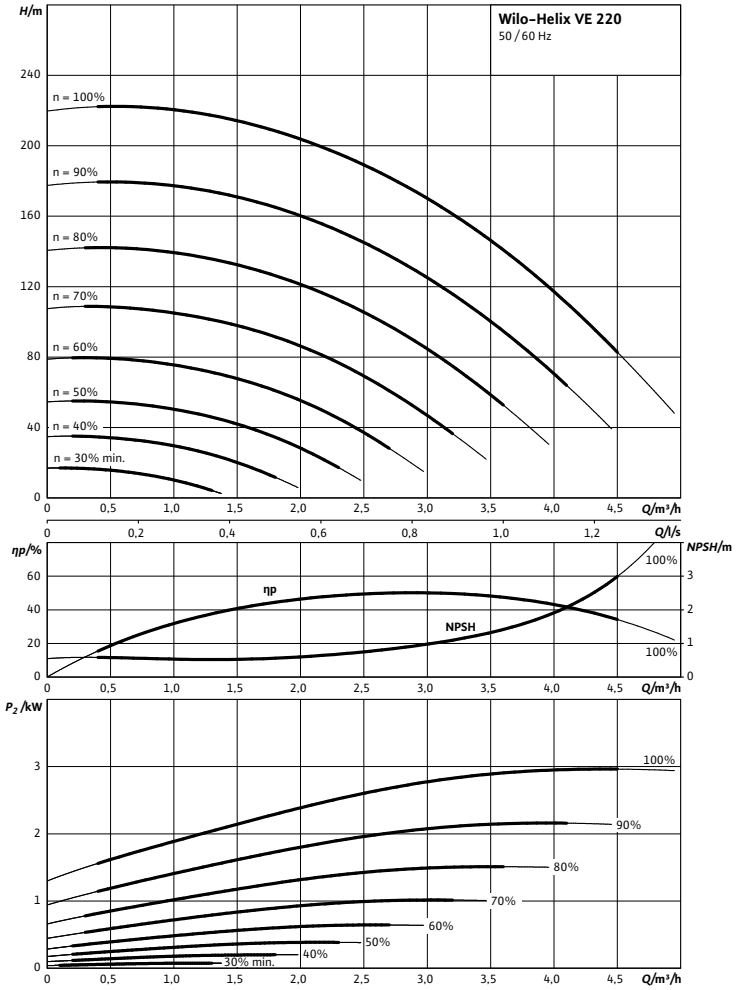

Pump curves in accordance with ISO 9906, class 2

Motor data					
Wilo-Helix...	**Nominal motor power**	**Nominal current 3~400 V, 50 Hz**	**Motor efficiency**		
	P_2	I_N	$\eta_{m\ 50\%}$	$\eta_{m\ 75\%}$	$\eta_{m\ 100\%}$
	kW	A	%		
Helix VE 220	3.00	9.00	84.2	87.5	87.5

Motor efficiency based on 400 V, 50 Hz

Dimensions, weights Wilo-Helix VE

Dimension drawing

Helix VE 2-4, PN 25

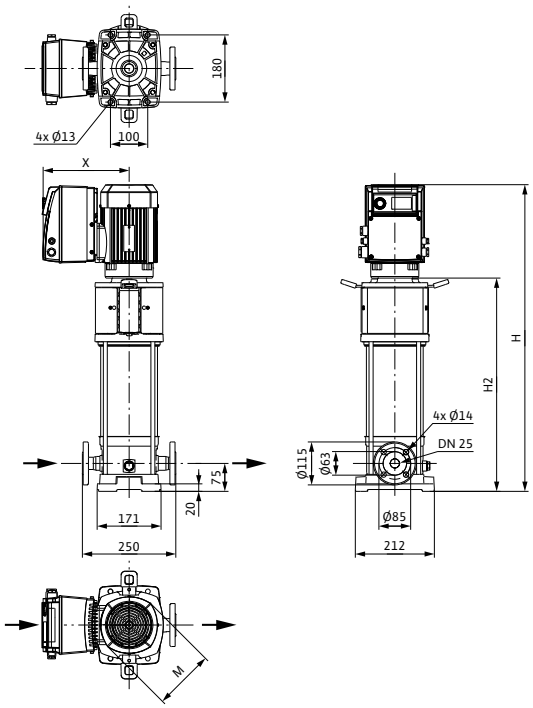

Dimensions, weights						
Wilo-Helix...	**Maximum operating pressure**	**Dimensions**				**Weight approx.**
	p_{max}	*H*	*H2*	*Ø M*	*X*	*m*
	bar	mm				kg
Helix VE 220	25	1179	862	194	265	73

Pump curves, motor data Wilo-Helix VE

Wilo-Helix VE 222

Minimum Efficiency Index (MEI): ≥ 0.7

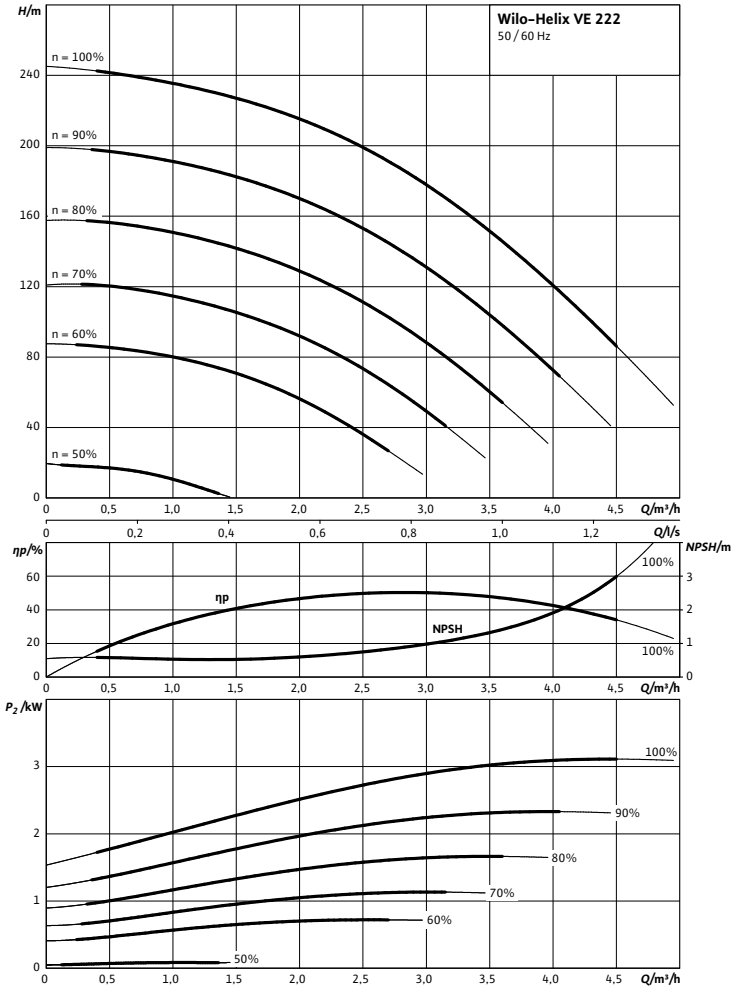

Pump curves in accordance with ISO 9906, class 2

Motor data					
Wilo-Helix...	**Nominal motor power**	**Nominal current 3~400 V, 50 Hz**	**Motor efficiency**		
	P_2	I_N	$\eta_{m\ 50\%}$	$\eta_{m\ 75\%}$	$\eta_{m\ 100\%}$
	kW	A	%		
Helix VE 222	4.00	9.70	84.5	87.1	87.5

Motor efficiency based on 400 V, 50 Hz

Dimensions, weights Wilo-Helix VE

Dimension drawing

Helix VE 2-4, PN 25

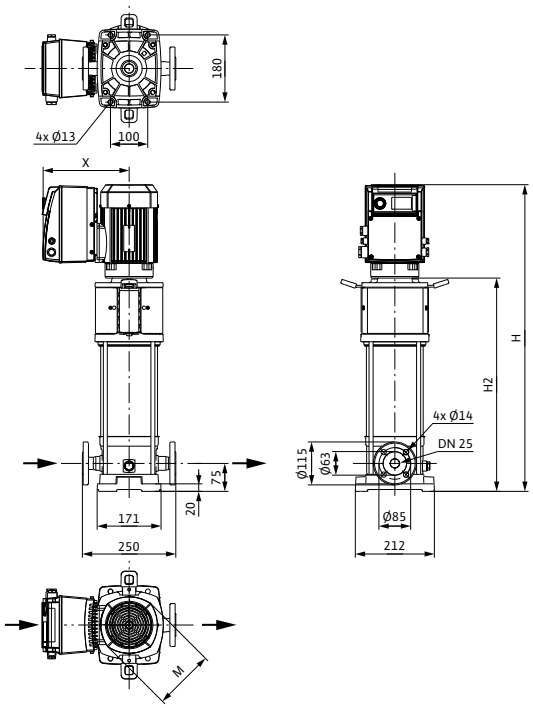

Dimensions, weights						
Wilo-Helix...	**Maximum operating pressure**	**Dimensions**				**Weight approx.**
	p_{max}	*H*	*H2*	*Ø M*	*X*	*m*
	bar	mm				kg
Helix VE 222	25	1296	962	220	284	74

Pump curves, motor data Wilo-Helix VE

Wilo-Helix VE 403

Minimum Efficiency Index (MEI): ≥0.7

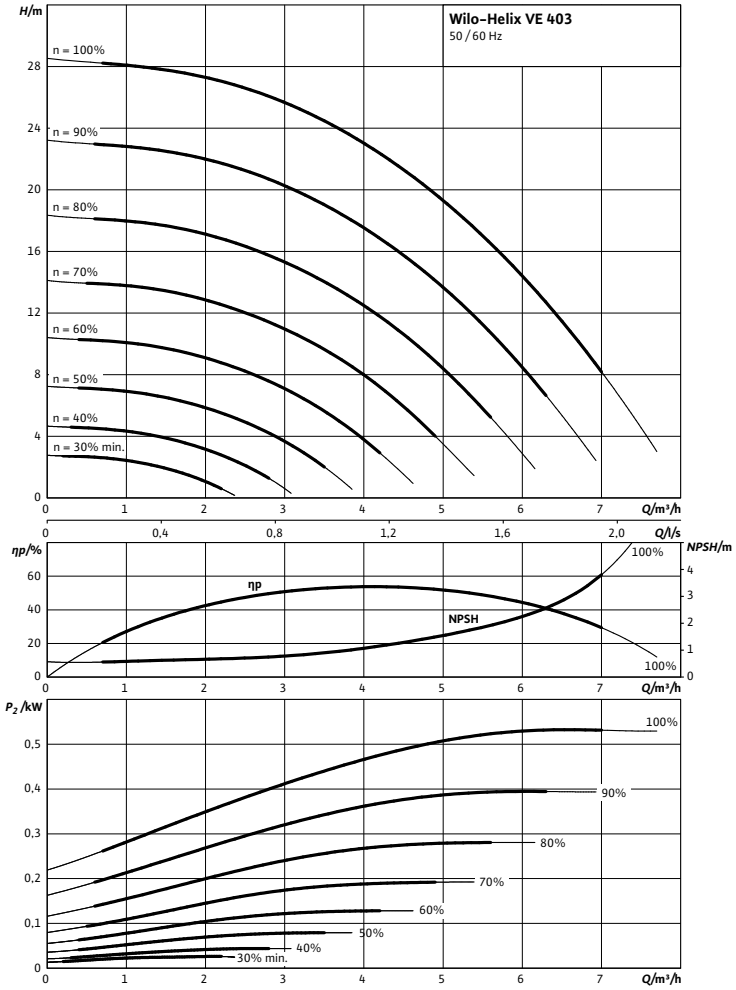

Pump curves in accordance with ISO 9906, class 2

Motor data					
Wilo-Helix...	**Nominal motor power**	**Nominal current 3~400 V, 50 Hz**	**Motor efficiency**		
	P_2	I_N	$\eta_{m\ 50\%}$	$\eta_{m\ 75\%}$	$\eta_{m\ 100\%}$
	kW	A	%		
Helix VE 403	0.55	1.70	74.0	78.0	79.0

Motor efficiency based on 400 V, 50 Hz

Dimensions, weights Wilo-Helix VE

Dimension drawing

Helix VE 2-4, PN 16

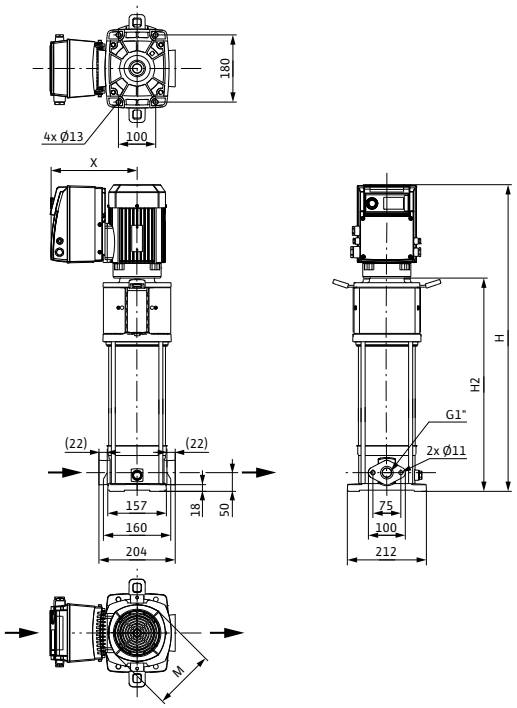

Dimension drawing

Helix VE 2-4, PN 25

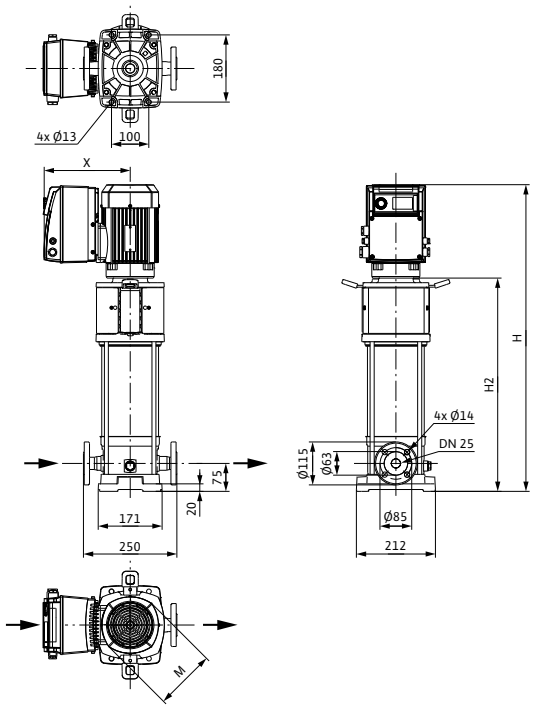

Dimensions, weights

Wilo-Helix...	Maximum operating pressure	Dimensions				Weight approx.
	p_{max}	*H*	*H2*	*Ø M*	*X*	*m*
	bar	mm				kg
Helix VE 403	16	620	396	130	229	30
Helix VE 403	25	645	421		229	32

Pump curves, motor data Wilo-Helix VE

Wilo-Helix VE 404

Minimum Efficiency Index (MEI): ≥0.7

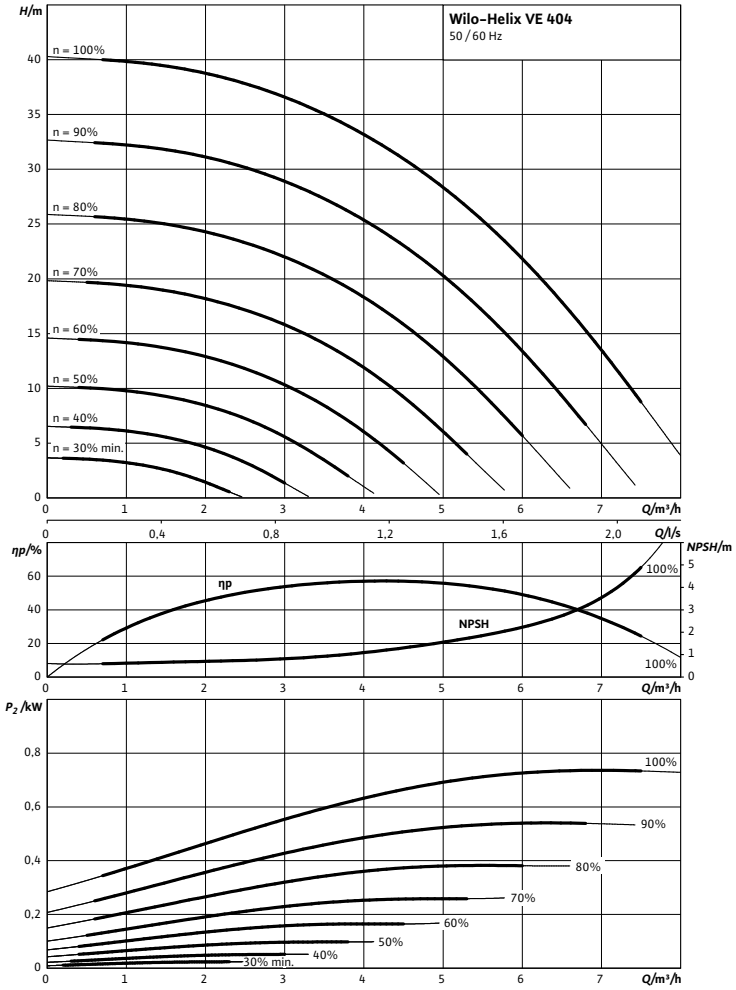

Pump curves in accordance with ISO 9906, class 2

Motor data					
Wilo-Helix...	**Nominal motor power**	**Nominal current 3~400 V, 50 Hz**	**Motor efficiency**		
	P_2	I_N	$\eta_{m\ 50\%}$	$\eta_{m\ 75\%}$	$\eta_{m\ 100\%}$
	kW	A	%		
Helix VE 404	0.75	3.20	74.0	78.0	79.0

Motor efficiency based on 400 V, 50 Hz

Dimensions, weights Wilo-Helix VE

Dimension drawing

Helix VE 2-4, PN 16

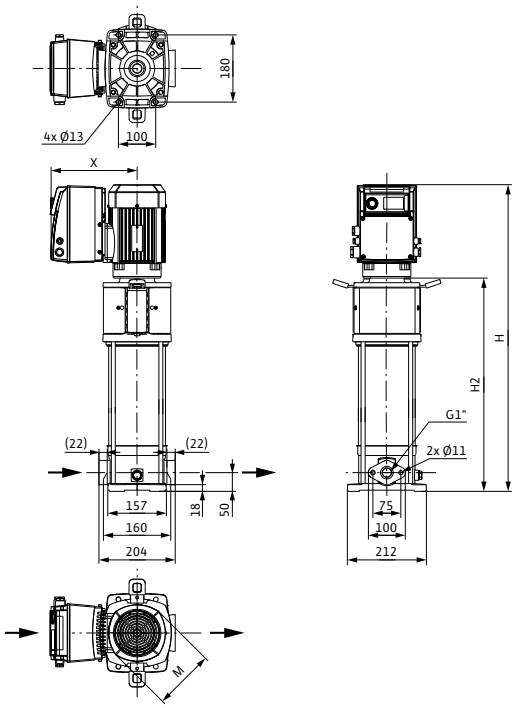

Dimension drawing

Helix VE 2-4, PN 25

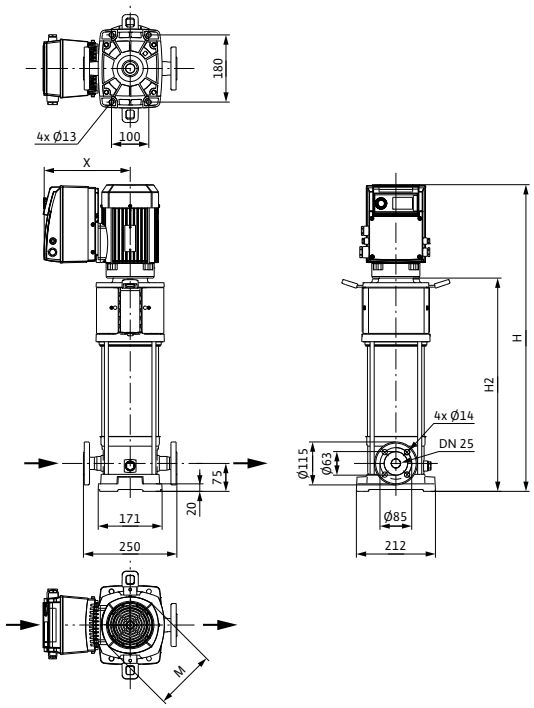

Dimensions, weights						
Wilo-Helix...	**Maximum operating pressure**	**Dimensions**				**Weight approx.**
	p_{max}	*H*	*H2*	*Ø M*	*X*	*m*
	bar	mm				kg
Helix VE 404	16	665	421	146	237	33
Helix VE 404	25	690	446		237	35

Pump curves, motor data Wilo-Helix VE

Wilo-Helix VE 405

Minimum Efficiency Index (MEI): ≥0.7

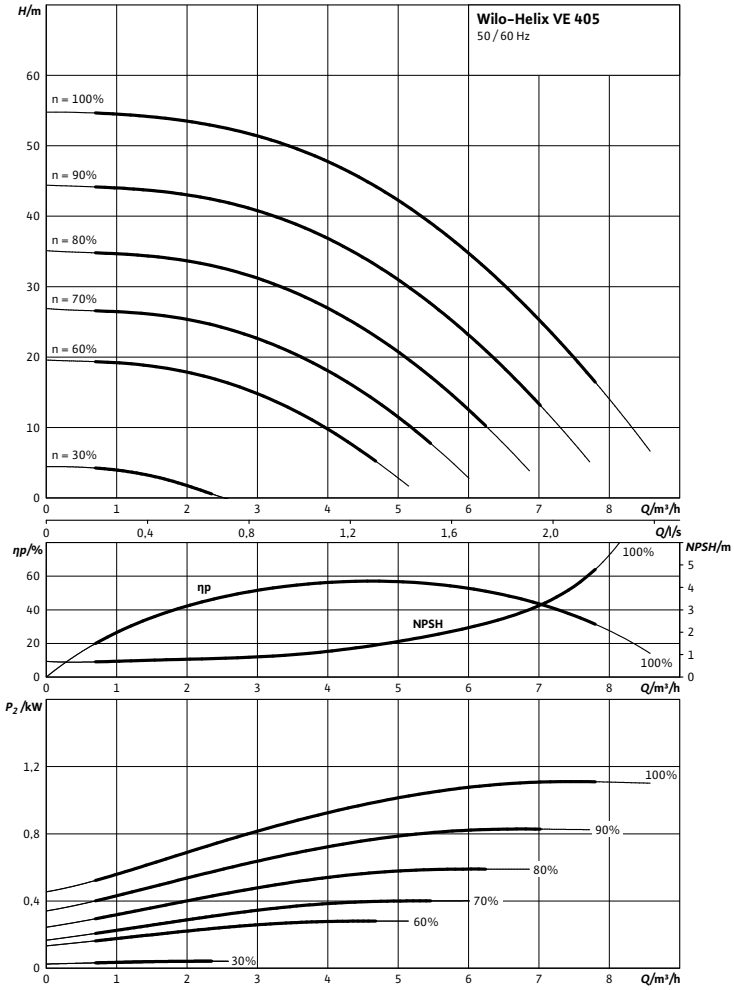

Pump curves in accordance with ISO 9906, class 2

Motor data					
Wilo-Helix...	**Nominal motor power**	**Nominal current 3~400 V, 50 Hz**	**Motor efficiency**		
	P_2	I_N	$\eta_{m\ 50\%}$	$\eta_{m\ 75\%}$	$\eta_{m\ 100\%}$
	kW	A	%		
Helix VE 405	1.10	3.20	79.0	82.0	82.5

Motor efficiency based on 400 V, 50 Hz

Dimensions, weights Wilo-Helix VE

Dimension drawing

Helix VE 2-4, PN 16

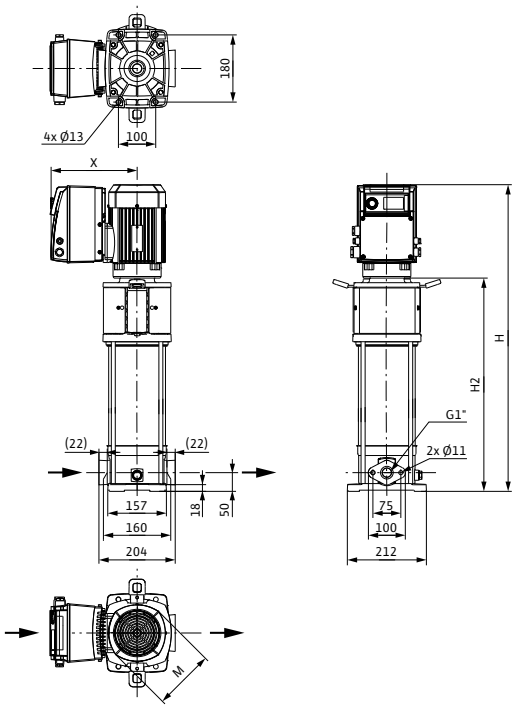

Dimension drawing

Helix VE 2-4, PN 25

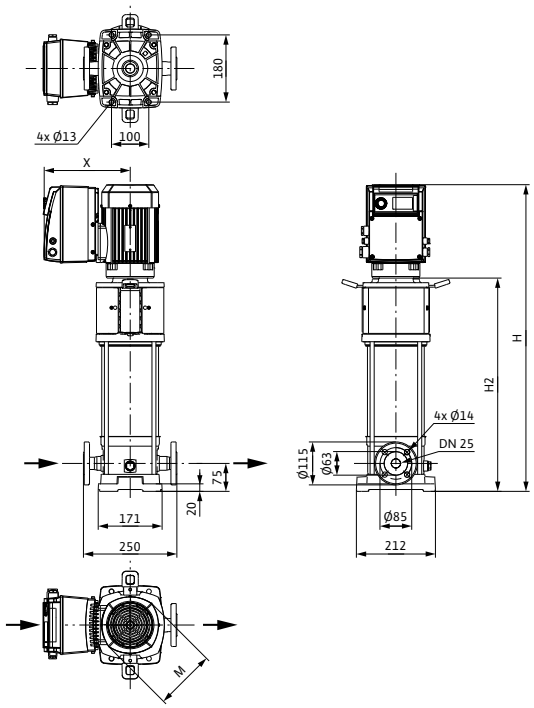

Dimensions, weights						
Wilo-Helix...	**Maximum operating pressure**	**Dimensions**				**Weight approx.**
	p_{max}	*H*	*H2*	*Ø M*	*X*	*m*
	bar	mm				kg
Helix VE 405	16	686	446	146	237	33
Helix VE 405	25	711	471		237	35

Pump curves, motor data Wilo-Helix VE

Wilo-Helix VE 407

Minimum Efficiency Index (MEI): ≥0.7

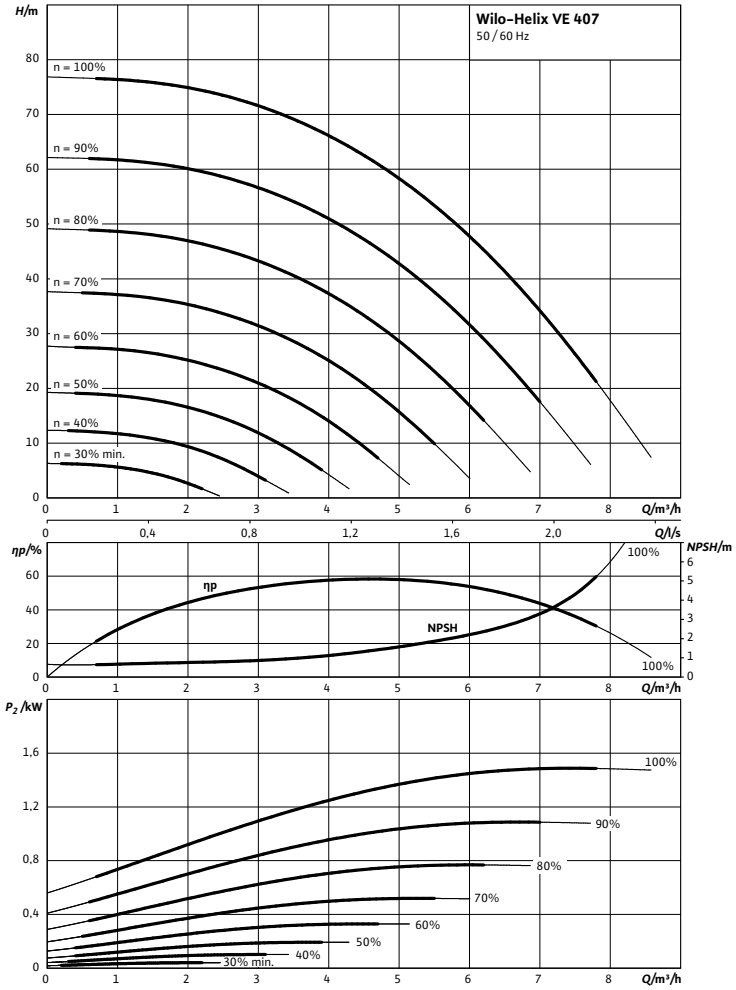

Pump curves in accordance with ISO 9906, class 2

Motor data

Wilo-Helix...	Nominal motor power	Nominal current 3~400 V, 50 Hz	Motor efficiency		
	P_2	I_N	$\eta_{m\ 50\%}$	$\eta_{m\ 75\%}$	$\eta_{m\ 100\%}$
	kW	A	%		
Helix VE 407	1.50	5.60	79.0	82.0	84.0

Motor efficiency based on 400 V, 50 Hz

Dimensions, weights Wilo-Helix VE

Dimension drawing

Helix VE 2-4, PN 16

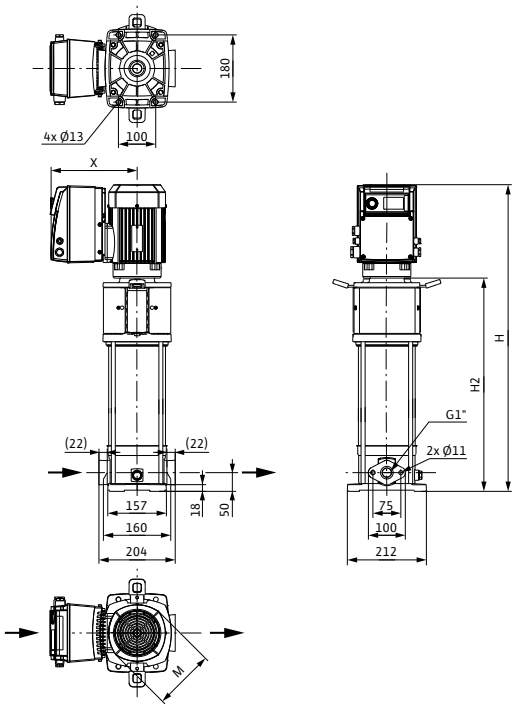

Dimension drawing

Helix VE 2-4, PN 25

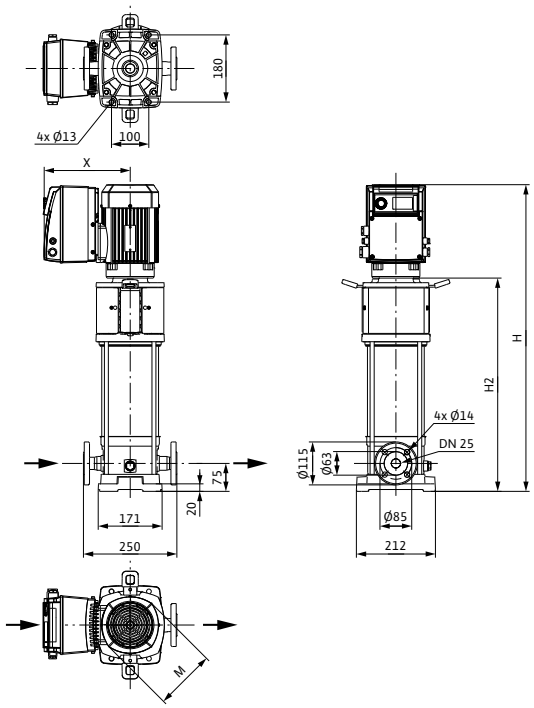

Dimensions, weights

Wilo-Helix...	Maximum operating pressure	Dimensions				Weight approx.
	p_{max}	*H*	*H2*	*Ø M*	*X*	*m*
	bar	mm				kg
Helix VE 407	16	785	506	193	254	43
Helix VE 407	25	810	531		254	45

Pump curves, motor data Wilo-Helix VE

Wilo-Helix VE 410

Minimum Efficiency Index (MEI): ≥0.7

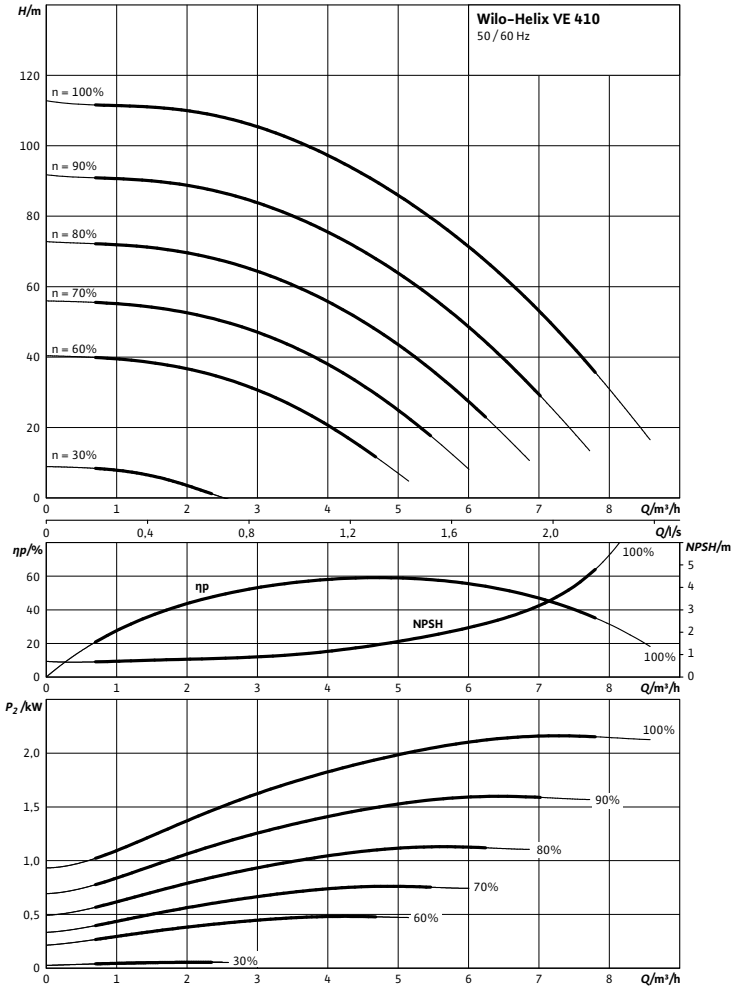

Pump curves in accordance with ISO 9906, class 2

Motor data

Wilo-Helix...	Nominal motor power	Nominal current 3~400 V, 50 Hz	Motor efficiency		
	P_2	I_N	$\eta_{m\ 50\%}$	$\eta_{m\ 75\%}$	$\eta_{m\ 100\%}$
	kW	A	%		
Helix VE 410	2.20	5.60	81.0	84.0	85.5

Motor efficiency based on 400 V, 50 Hz

Dimensions, weights Wilo-Helix VE

Dimension drawing

Helix VE 2-4, PN 16

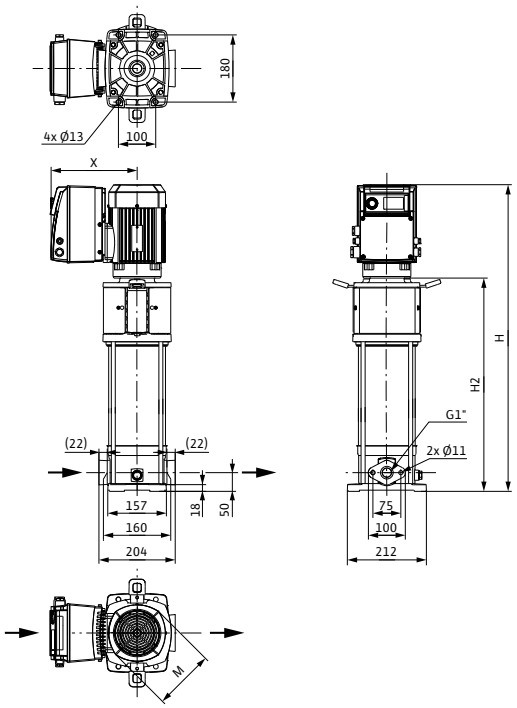

Dimension drawing

Helix VE 2-4, PN 25

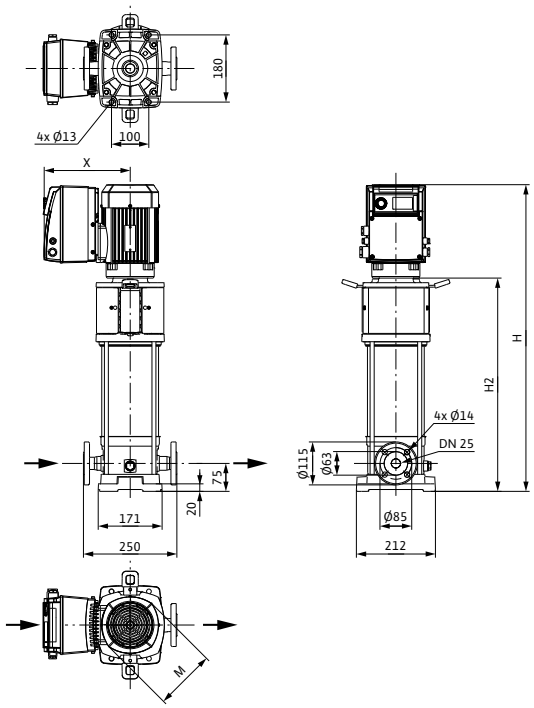

Dimensions, weights						
Wilo-Helix...	**Maximum operating pressure**	**Dimensions**				**Weight approx.**
	p_{max}	*H*	*H2*	*Ø M*	*X*	*m*
	bar	mm				kg
Helix VE 410	16	865	581	170	254	45
Helix VE 410	25	890	606		254	47

Pump curves, motor data Wilo-Helix VE

Wilo-Helix VE 413

Minimum Efficiency Index (MEI): ≥0.7

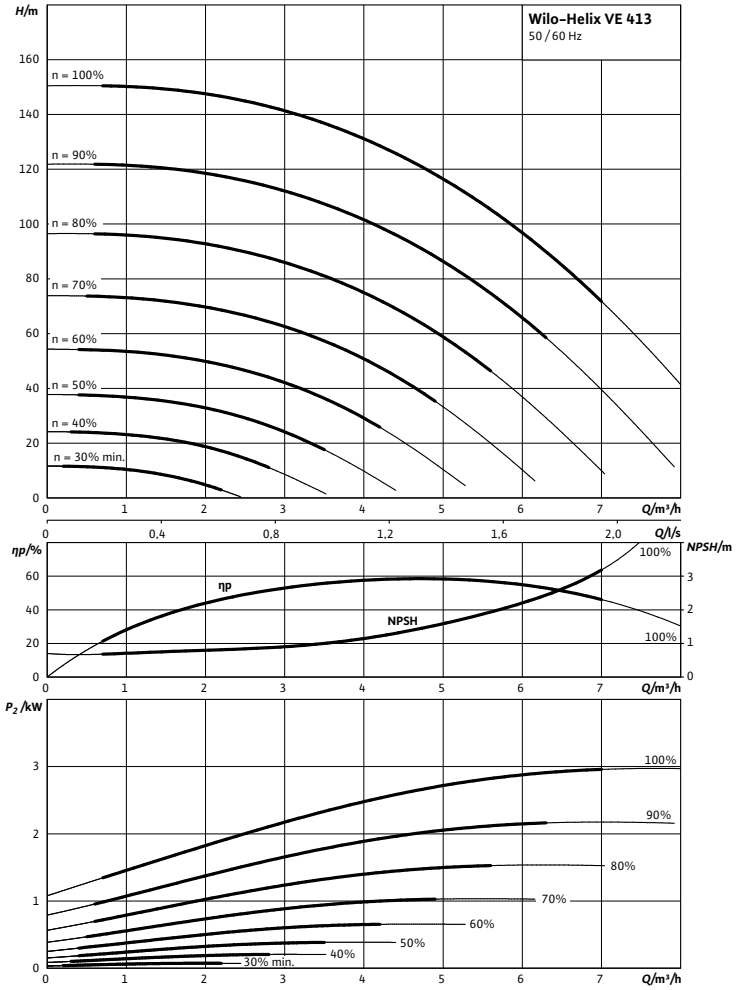

Pump curves in accordance with ISO 9906, class 2

Motor data					
Wilo-Helix...	**Nominal motor power**	**Nominal current 3~400 V, 50 Hz**	**Motor efficiency**		
	P_2	I_N	$\eta_{m\ 50\%}$	$\eta_{m\ 75\%}$	$\eta_{m\ 100\%}$
	kW	A	%		
Helix VE 413	3.00	9.00	84.2	87.5	87.5

Motor efficiency based on 400 V, 50 Hz

Dimensions, weights Wilo-Helix VE

Dimension drawing

Helix VE 2-4, PN 25

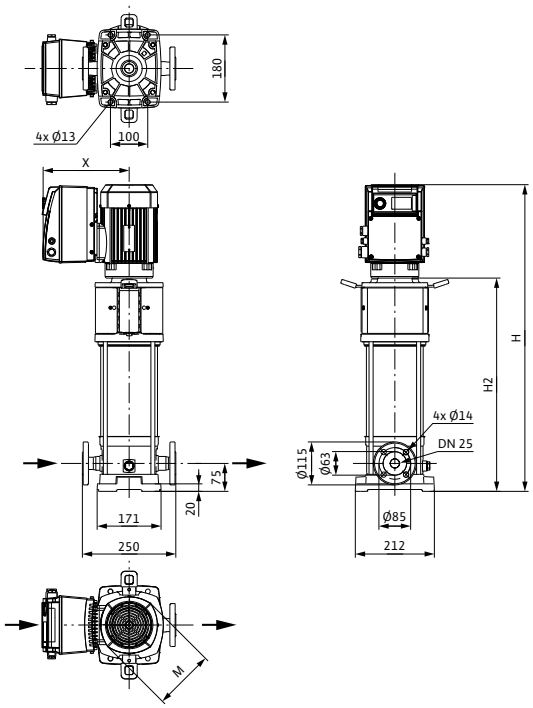

Dimensions, weights						
Wilo-Helix...	**Maximum operating pressure**	**Dimensions**				**Weight approx.**
	p_{max}	*H*	*H2*	*Ø M*	*X*	*m*
	bar	mm				kg
Helix VE 413	25	1033	716	194	265	71

Pump curves, motor data Wilo-Helix VE

Wilo-Helix VE 418

Minimum Efficiency Index (MEI): ≥0.7

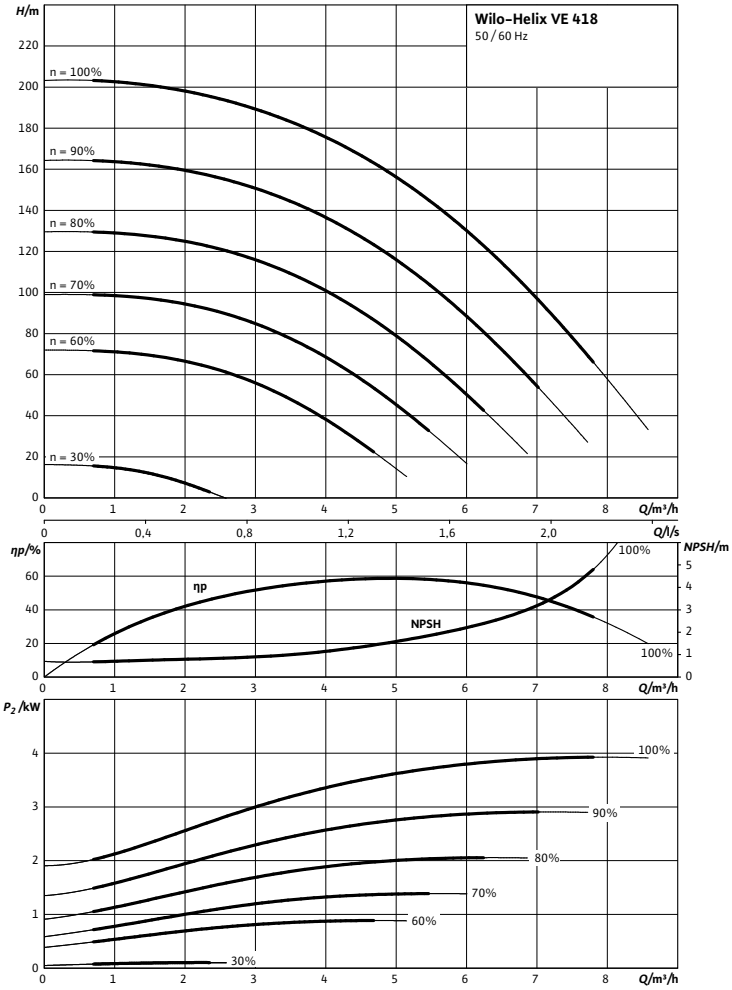

Pump curves in accordance with ISO 9906, class 2

Motor data

Wilo-Helix...	Nominal motor power	Nominal current 3~400 V, 50 Hz	Motor efficiency		
	P_2	I_N	$\eta_{m\ 50\%}$	$\eta_{m\ 75\%}$	$\eta_{m\ 100\%}$
	kW	A	%		
Helix VE 418	4.00	9.70	84.5	87.1	87.5

Motor efficiency based on 400 V, 50 Hz

Dimensions, weights Wilo-Helix VE

Dimension drawing

Helix VE 2-4, PN 25

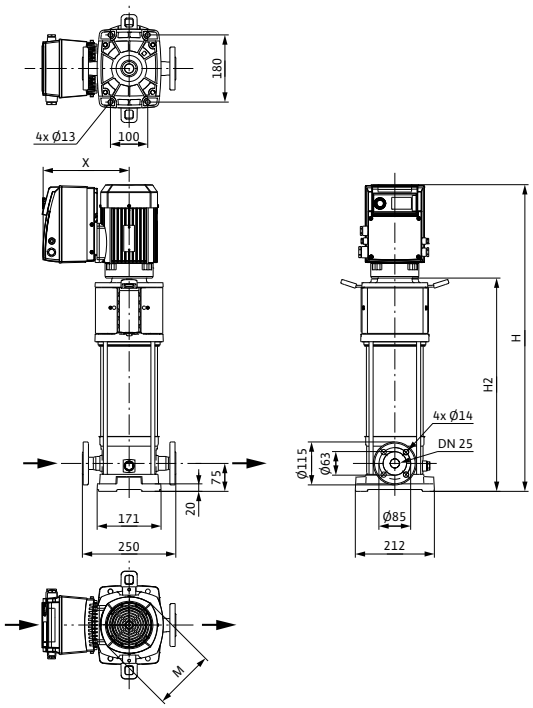

Dimensions, weights						
Wilo-Helix...	**Maximum operating pressure**	**Dimensions**				**Weight approx.**
	p_{max}	*H*	*H2*	*Ø M*	*X*	*m*
	bar	mm				kg
Helix VE 418	25	1150	816	220	284	73

Pump curves, motor data Wilo-Helix VE

Wilo-Helix VE 601

Minimum Efficiency Index (MEI): ≥ 0.7

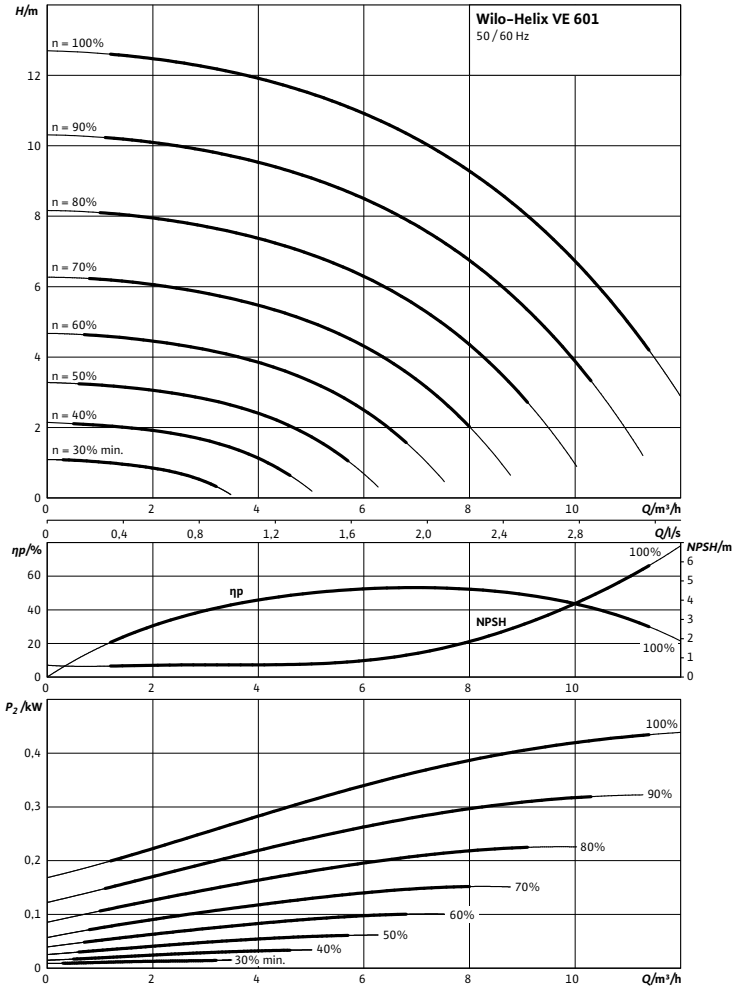

Pump curves in accordance with ISO 9906, class 2

Motor data					
Wilo-Helix...	**Nominal motor power**	**Nominal current 3~400 V, 50 Hz**	**Motor efficiency**		
	P_2	I_N	$\eta_{m\ 50\%}$	$\eta_{m\ 75\%}$	$\eta_{m\ 100\%}$
	kW	A	%		
Helix VE 601	0.55	1.70	74.0	78.0	79.0

Motor efficiency based on 400 V, 50 Hz

Dimensions, weights Wilo-Helix VE

Dimension drawing

Helix VE 6, PN 16

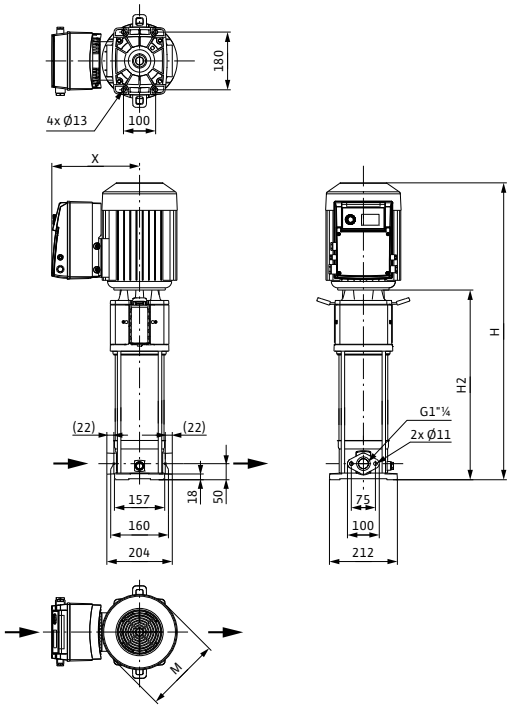

Dimension drawing

Helix VE 6, PN 25

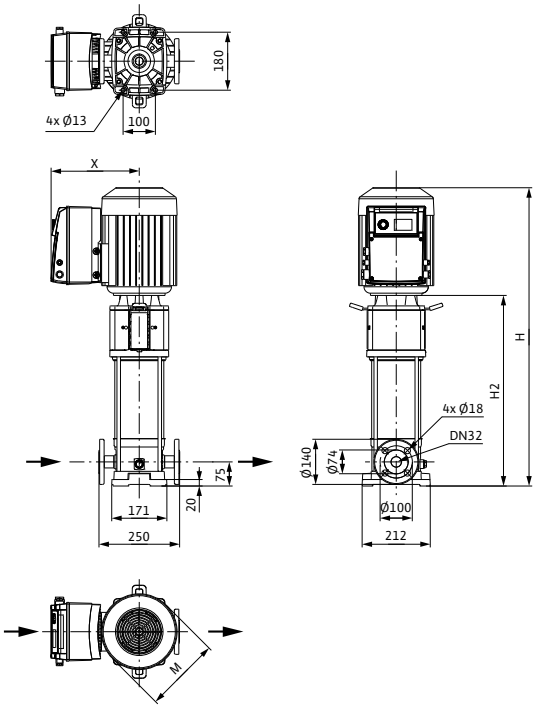

Dimensions, weights						
Wilo-Helix...	**Maximum operating pressure**	**Dimensions**				**Weight approx.**
	p_{max}	*H*	*H2*	*Ø M*	*X*	*m*
	bar	mm				kg
Helix VE 601	16	620	396	130	229	31
Helix VE 601	25	645	421			33

Pump curves, motor data Wilo-Helix VE

Wilo-Helix VE 602

Minimum Efficiency Index (MEI): ≥ 0.7

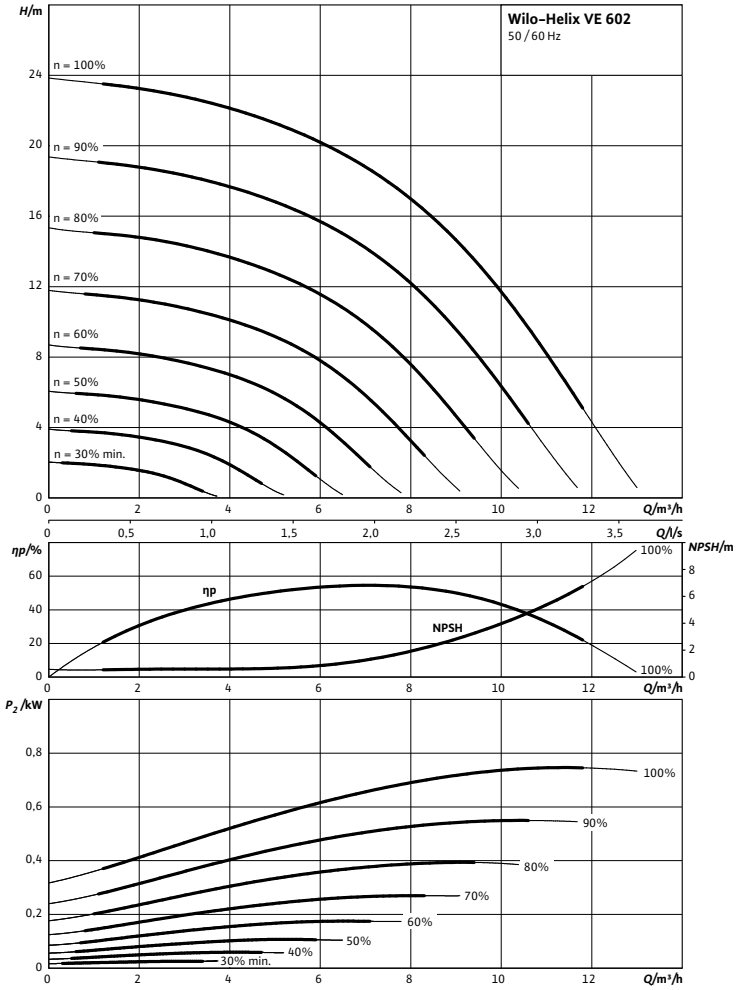

Pump curves in accordance with ISO 9906, class 2

Motor data					
Wilo-Helix...	**Nominal motor power**	**Nominal current 3~400 V, 50 Hz**	**Motor efficiency**		
	P_2	I_N	$\eta_{m\ 50\%}$	$\eta_{m\ 75\%}$	$\eta_{m\ 100\%}$
	kW	A	%		
Helix VE 602	0.75	3.20	74.0	78.0	79.0

Motor efficiency based on 400 V, 50 Hz

Dimensions, weights Wilo-Helix VE

Dimension drawing

Helix VE 6, PN 16

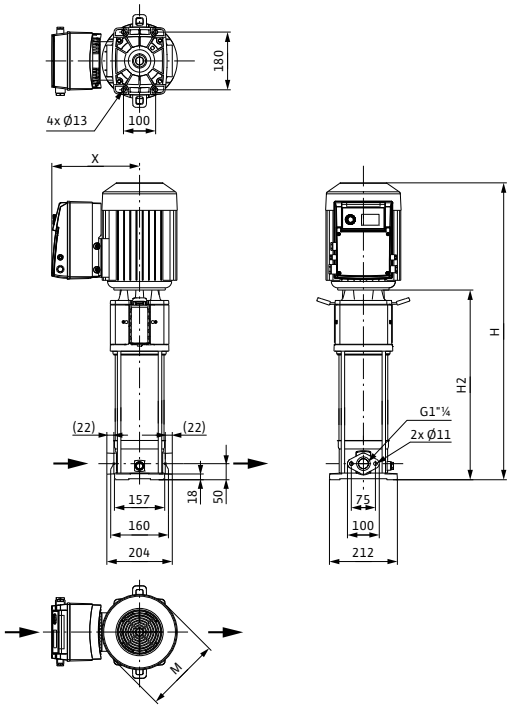

Dimension drawing

Helix VE 6, PN 25

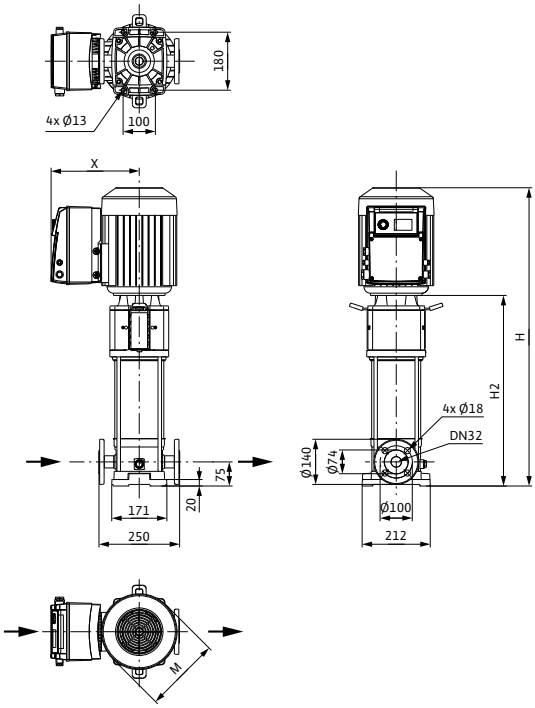

Dimensions, weights						
Wilo-Helix...	**Maximum operating pressure**	**Dimensions**				**Weight approx.**
	p_{max}	*H*	*H2*	*Ø M*	*X*	*m*
	bar	mm				kg
Helix VE 602	16	640	396	146	237	33
Helix VE 602	25	665	421			35

Pump curves, motor data Wilo-Helix VE

Wilo-Helix VE 603

Minimum Efficiency Index (MEI): ≥ 0.7

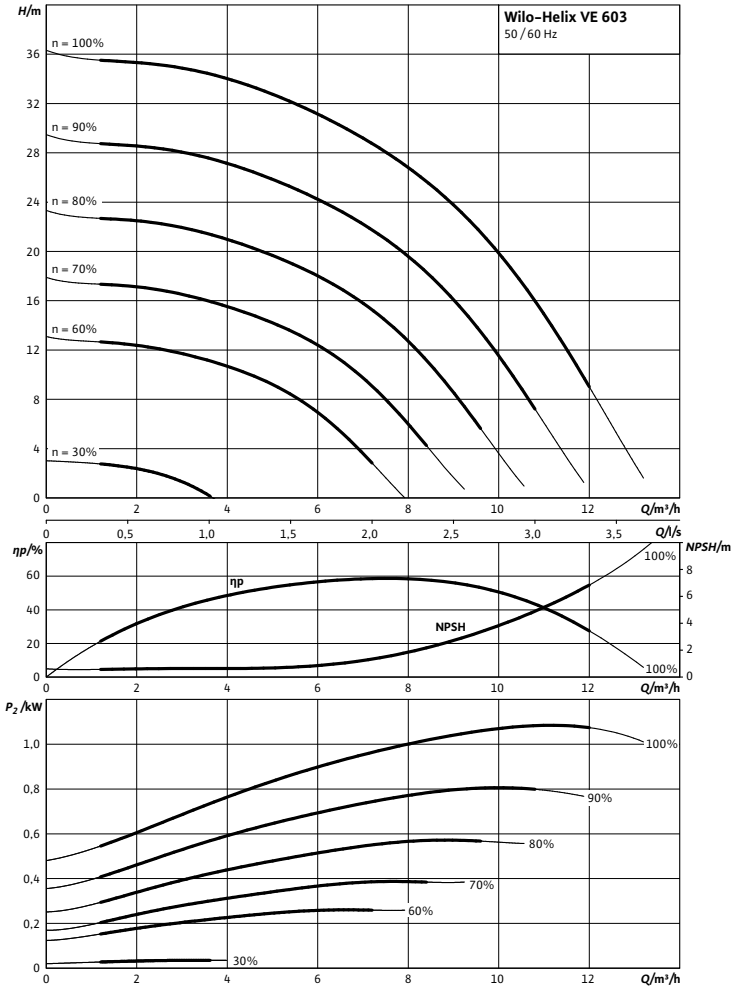

Pump curves in accordance with ISO 9906, class 2

Motor data					
Wilo-Helix...	**Nominal motor power**	**Nominal current 3~400 V, 50 Hz**	**Motor efficiency**		
	P_2	I_N	$\eta_{m\ 50\%}$	$\eta_{m\ 75\%}$	$\eta_{m\ 100\%}$
	kW	A	%		
Helix VE 603	1.10	3.20	79.0	82.0	82.5

Motor efficiency based on 400 V, 50 Hz

Dimensions, weights Wilo-Helix VE

Dimension drawing

Helix VE 6, PN 16

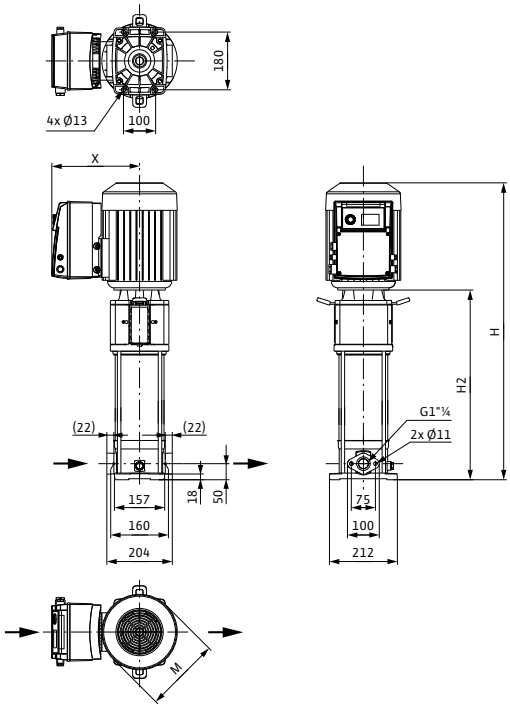

Dimension drawing

Helix VE 6, PN 25

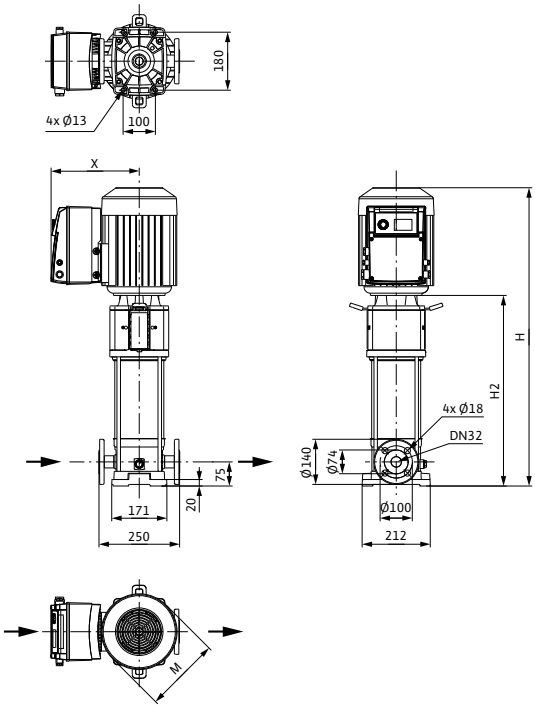

Dimensions, weights						
Wilo-Helix...	**Maximum operating pressure**	**Dimensions**				**Weight approx.**
	p_{max}	*H*	*H2*	*Ø M*	*X*	*m*
	bar	mm				kg
Helix VE 603	16	674	434	146	237	34
Helix VE 603	25	699	459		237	36

Pump curves, motor data Wilo-Helix VE

Wilo-Helix VE 604

Minimum Efficiency Index (MEI): ≥ 0.7

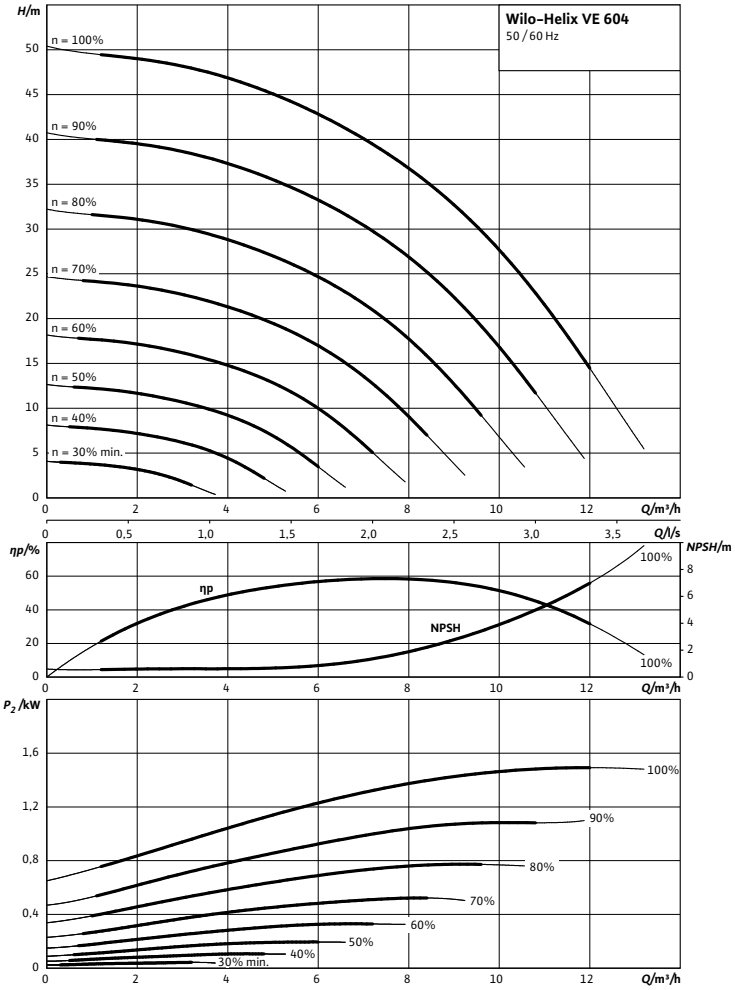

Pump curves in accordance with ISO 9906, class 2

Motor data					
Wilo-Helix...	**Nominal motor power**	**Nominal current 3~400 V, 50 Hz**	**Motor efficiency**		
	P_2	I_N	$\eta_{m\ 50\%}$	$\eta_{m\ 75\%}$	$\eta_{m\ 100\%}$
	kW	A	%		
Helix VE 604	1.50	5.60	79.0	82.0	84.0

Motor efficiency based on 400 V, 50 Hz

Dimensions, weights Wilo-Helix VE

Dimension drawing

Helix VE 6, PN 16

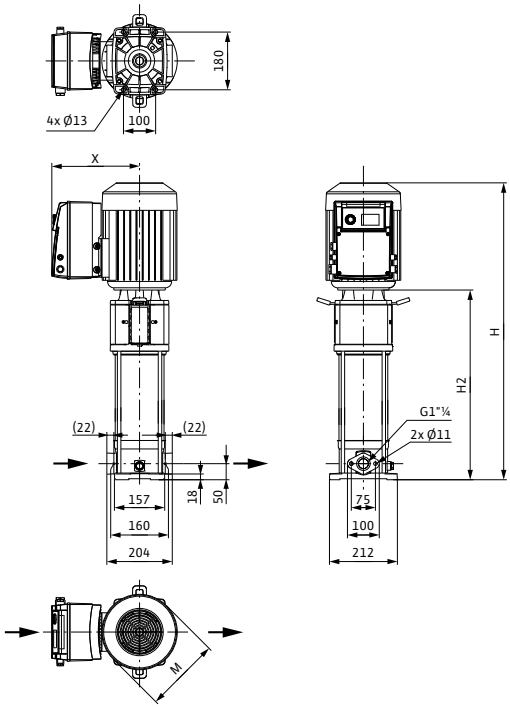

Dimension drawing

Helix VE 6, PN 25

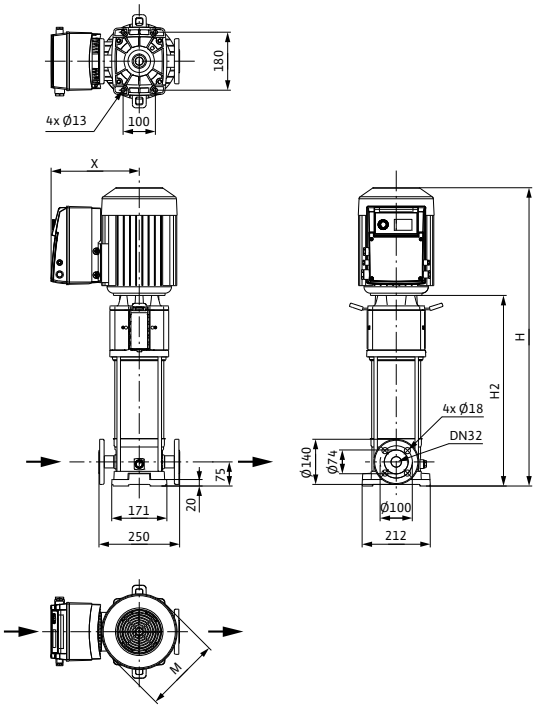

Dimensions, weights						
Wilo-Helix...	**Maximum operating pressure**	**Dimensions**				**Weight approx.**
	p_{max}	*H*	*H2*	*Ø M*	*X*	*m*
	bar	mm				kg
Helix VE 604	16	750	471	193	254	44
Helix VE 604	25	785	506		254	46

Pump curves, motor data Wilo-Helix VE

Wilo-Helix VE 606

Minimum Efficiency Index (MEI): ≥ 0.7

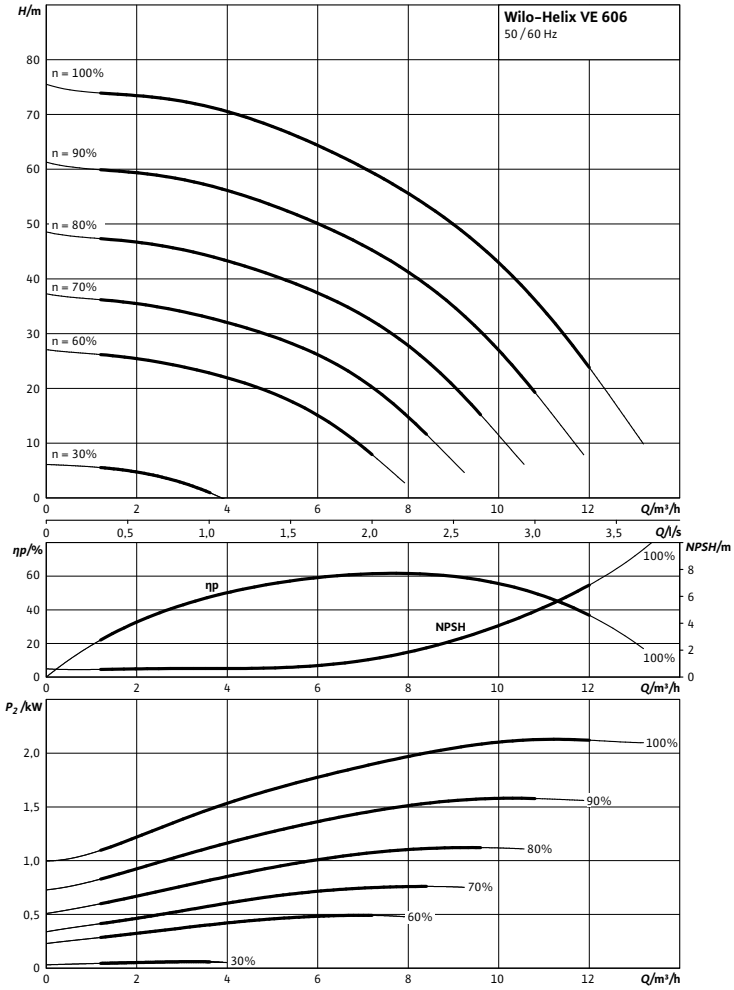

Pump curves in accordance with ISO 9906, class 2

Motor data

Wilo-Helix...	Nominal motor power	Nominal current 3~400 V, 50 Hz	Motor efficiency		
	P_2	I_N	$\eta_{m\ 50\%}$	$\eta_{m\ 75\%}$	$\eta_{m\ 100\%}$
	kW	A	%		
Helix VE 606	2.20	5.60	81.0	84.0	85.5

Motor efficiency based on 400 V, 50 Hz

Dimensions, weights Wilo-Helix VE

Dimension drawing

Helix VE 6, PN 16

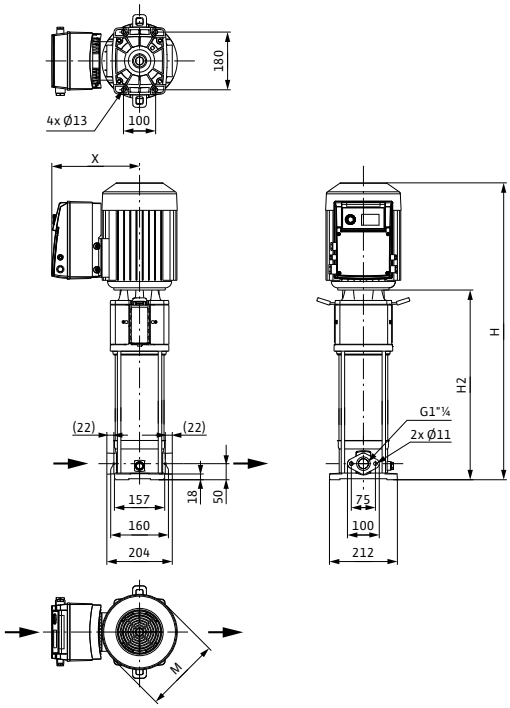

Dimension drawing

Helix VE 6, PN 25

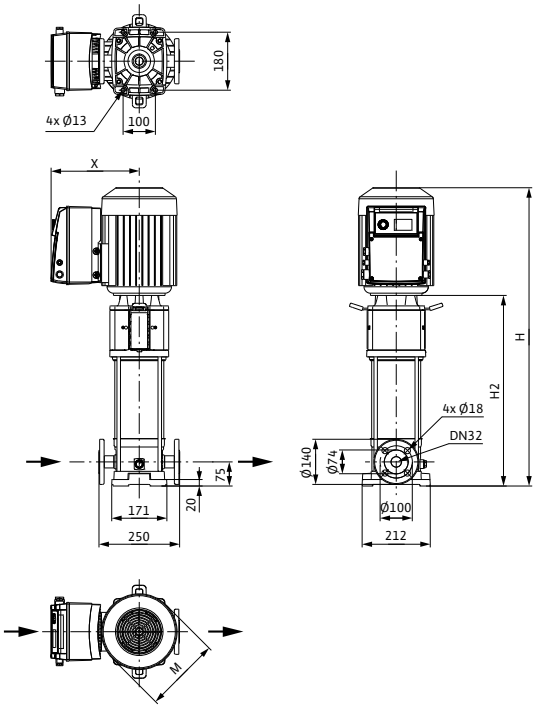

Dimensions, weights						
Wilo-Helix...	**Maximum operating pressure**	**Dimensions**				**Weight approx.**
	p_{max}	*H*	*H2*	*Ø M*	*X*	*m*
	bar	mm				kg
Helix VE 606	16	840	556	170	254	46
Helix VE 606	25	865	581		254	48

Pump curves, motor data Wilo-Helix VE

Wilo-Helix VE 608

Minimum Efficiency Index (MEI): ≥ 0.7

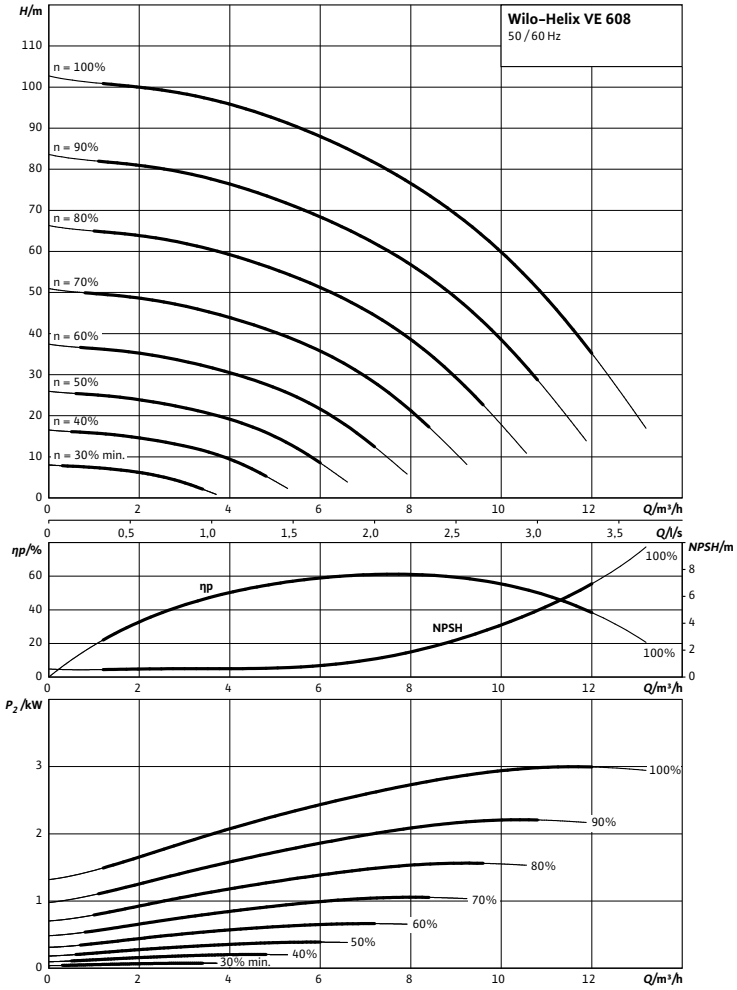

Pump curves in accordance with ISO 9906, class 2

Motor data					
Wilo-Helix...	**Nominal motor power**	**Nominal current 3~400 V, 50 Hz**	**Motor efficiency**		
	P_2	I_N	$\eta_{m\ 50\%}$	$\eta_{m\ 75\%}$	$\eta_{m\ 100\%}$
	kW	A	%		
Helix VE 608	3.00	9.00	84.2	87.5	87.5

Motor efficiency based on 400 V, 50 Hz

Dimensions, weights Wilo-Helix VE

Dimension drawing

Helix VE 6, PN 16

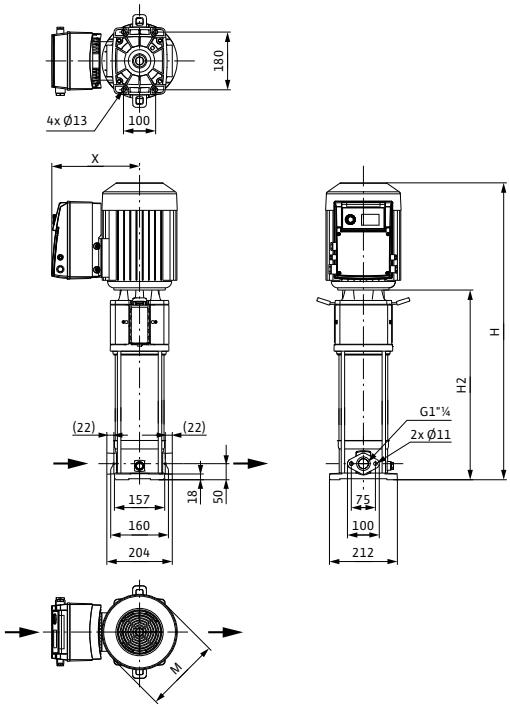

Dimension drawing

Helix VE 6, PN 25

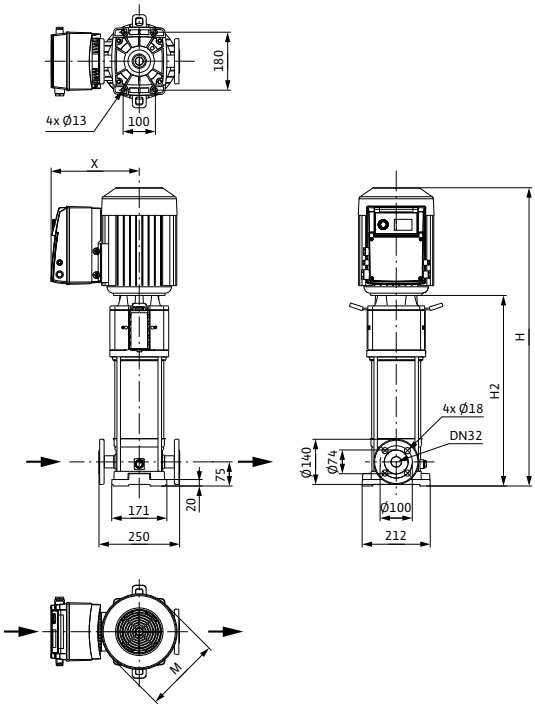

Dimensions, weights						
Wilo-Helix...	**Maximum operating pressure**	**Dimensions**				**Weight approx.**
	p_{max}	*H*	*H2*	*Ø M*	*X*	*m*
	bar	mm				kg
Helix VE 608	16	948	631	194	265	69
Helix VE 608	25	983	666		265	71

Pump curves, motor data Wilo-Helix VE

Wilo-Helix VE 611

Minimum Efficiency Index (MEI): ≥ 0.7

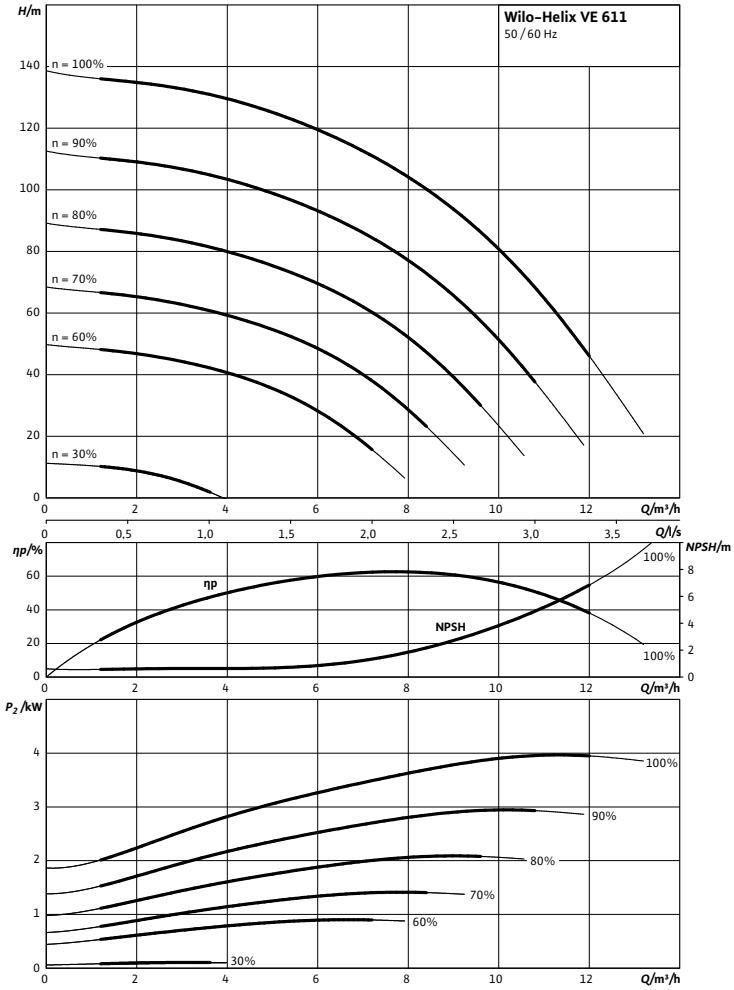

Pump curves in accordance with ISO 9906, class 2

Motor data

Wilo-Helix...	Nominal motor power	Nominal current 3~400 V, 50 Hz	Motor efficiency		
	P_2	I_N	$\eta_{m\ 50\%}$	$\eta_{m\ 75\%}$	$\eta_{m\ 100\%}$
	kW	A	%		
Helix VE 611	4.00	9.70	84.5	87.1	87.5

Motor efficiency based on 400 V, 50 Hz

Dimensions, weights Wilo-Helix VE

Dimension drawing

Helix VE 6, PN 16

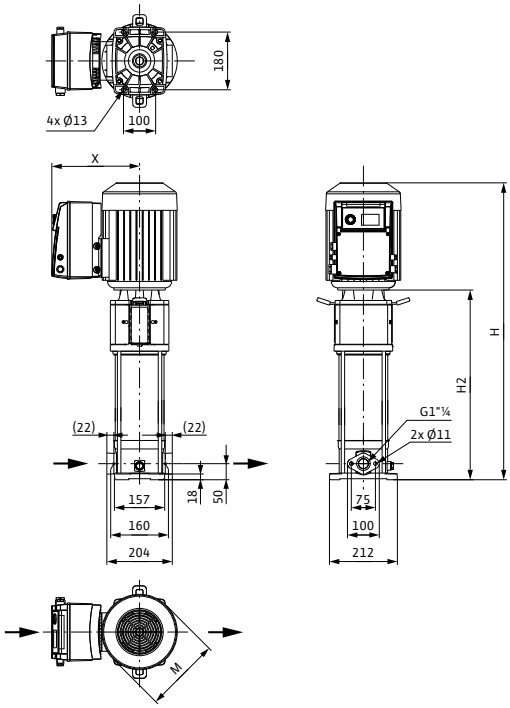

Dimension drawing

Helix VE 6, PN 25

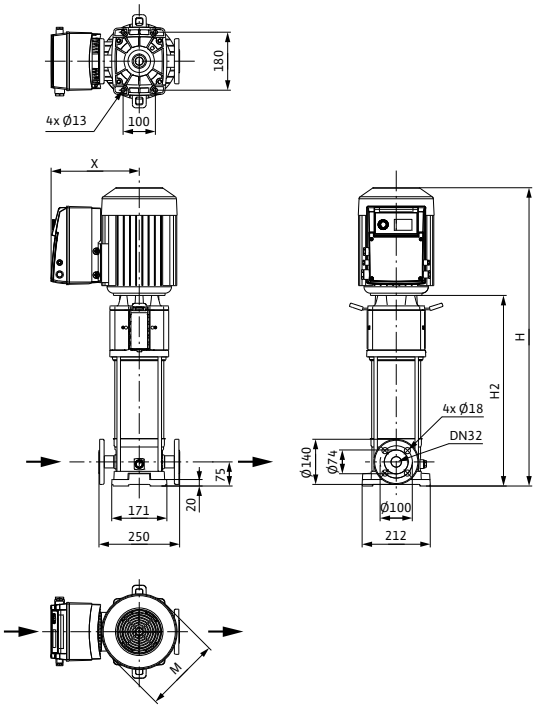

Dimensions, weights						
Wilo-Helix...	**Maximum operating pressure**	**Dimensions**				**Weight approx.**
	p_{max}	*H*	*H2*	*Ø M*	*X*	*m*
	bar	mm				kg
Helix VE 611	16	1125	791	220	284	72
Helix VE 611	25	1150	816		284	74

Pump curves, motor data Wilo-Helix VE

Wilo-Helix VE 615

Minimum Efficiency Index (MEI): ≥ 0.7

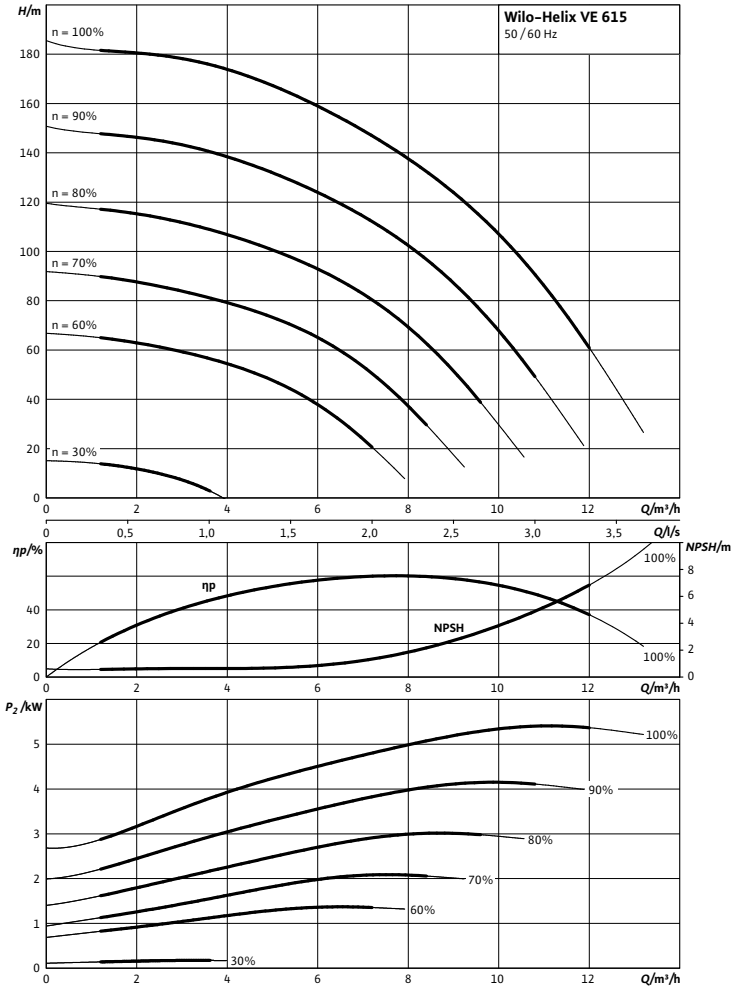

Pump curves in accordance with ISO 9906, class 2

Motor data

Wilo-Helix...	Nominal motor power	Nominal current 3~400 V, 50 Hz	Motor efficiency		
	P_2	I_N	$\eta_{m\ 50\%}$	$\eta_{m\ 75\%}$	$\eta_{m\ 100\%}$
	kW	A	%		
Helix VE 615	5.50	11.50	85.5	87.8	88.5

Motor efficiency based on 400 V, 50 Hz

Dimensions, weights Wilo-Helix VE

Dimension drawing

Helix VE 6, PN 25

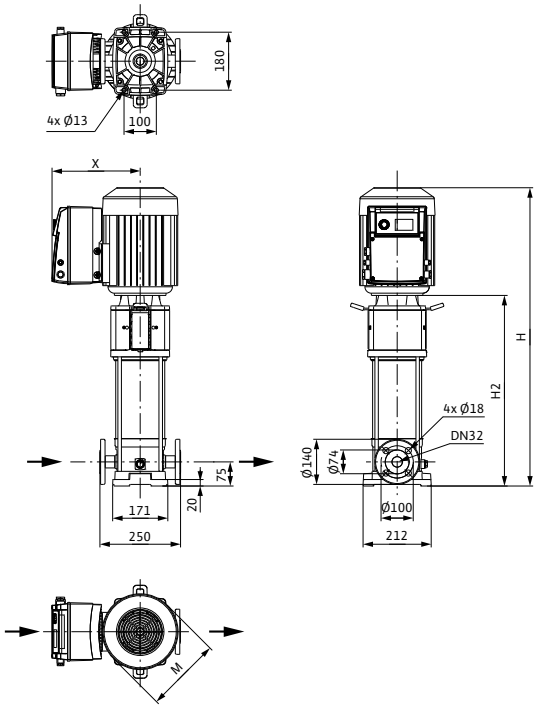

Dimensions, weights						
Wilo-Helix...	**Maximum operating pressure**	**Dimensions**				**Weight approx.**
	p_{max}	*H*	*H2*	*Ø M*	*X*	*m*
	bar	mm				kg
Helix VE 615	25	1473	1086	262	296	103

Pump curves, motor data Wilo-Helix VE

Wilo-Helix VE 619

Minimum Efficiency Index (MEI): ≥ 0.7

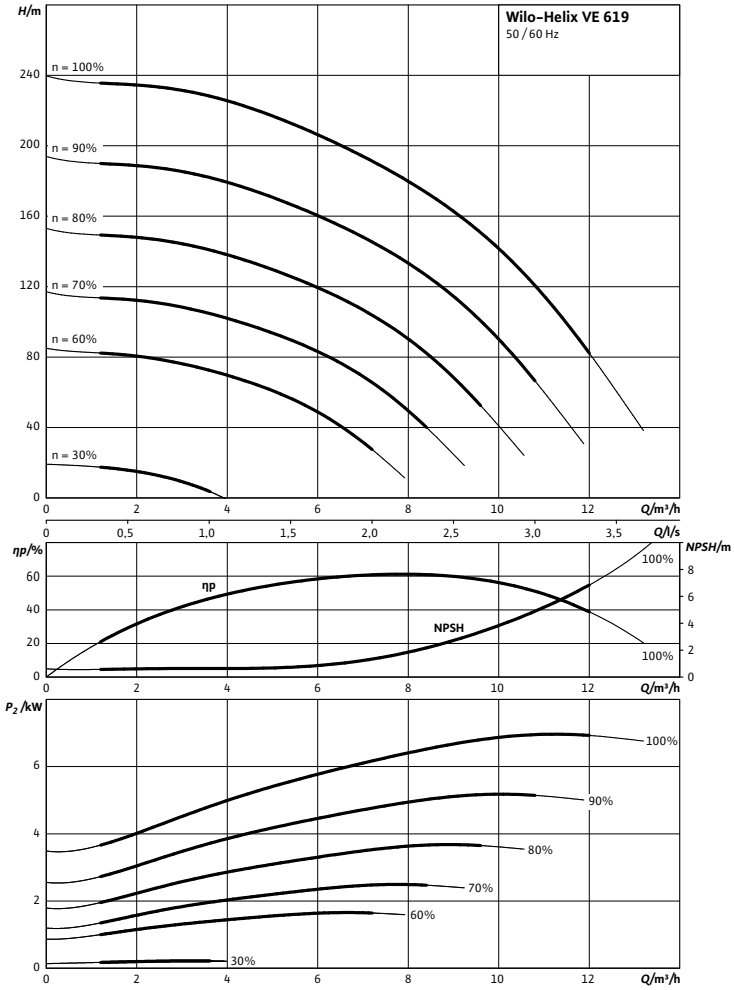

Pump curves in accordance with ISO 9906, class 2

Motor data					
Wilo-Helix...	**Nominal motor power**	**Nominal current 3~400 V, 50 Hz**	**Motor efficiency**		
	P_2	I_N	$\eta_{m\ 50\%}$	$\eta_{m\ 75\%}$	$\eta_{m\ 100\%}$
	kW	A	%		
Helix VE 619	7.50	14.30	88.4	89.5	89.5

Motor efficiency based on 400 V, 50 Hz

Dimensions, weights Wilo-Helix VE

Dimension drawing

Helix VE 6, PN 25

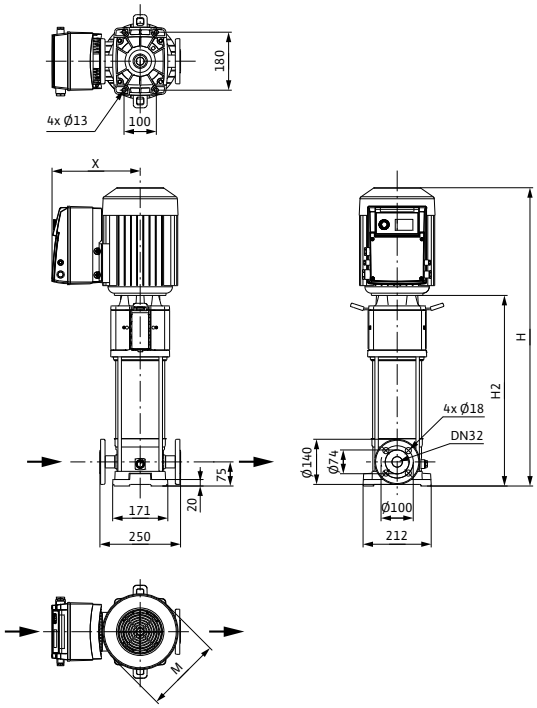

Dimensions, weights						
Wilo-Helix...	**Maximum operating pressure**	**Dimensions**				**Weight approx.**
	p_{max}	*H*	*H2*	*Ø M*	*X*	*m*
	bar	mm				kg
Helix VE 619	25	1623	1236	262	296	111

Pump curves, motor data Wilo-Helix VE

Wilo-Helix VE 1001

Minimum Efficiency Index (MEI): ≥ 0.7

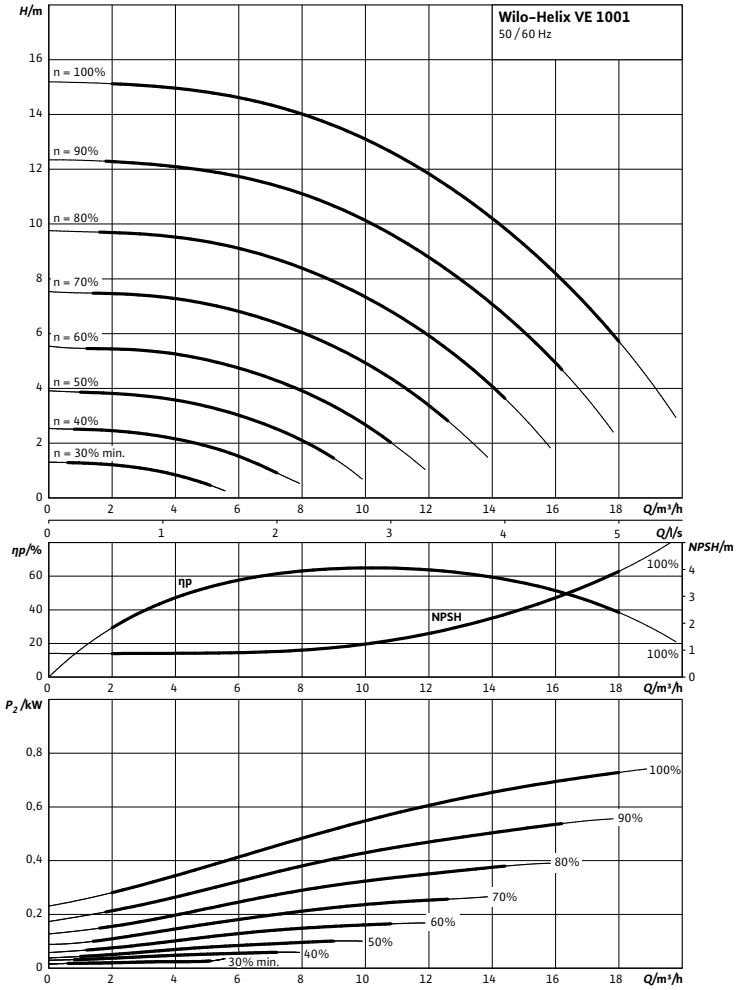

Pump curves in accordance with ISO 9906, class 2

Motor data					
Wilo-Helix...	**Nominal motor power**	**Nominal current 3~400 V, 50 Hz**	**Motor efficiency**		
	P_2	I_N	$\eta_{m\ 50\%}$	$\eta_{m\ 75\%}$	$\eta_{m\ 100\%}$
	kW	A	%		
Helix VE 1001	0.75	3.20	74.0	78.0	79.0

Motor efficiency based on 400 V, 50 Hz

Dimensions, weights Wilo-Helix VE

Dimension drawing

Helix VE 10, PN 16

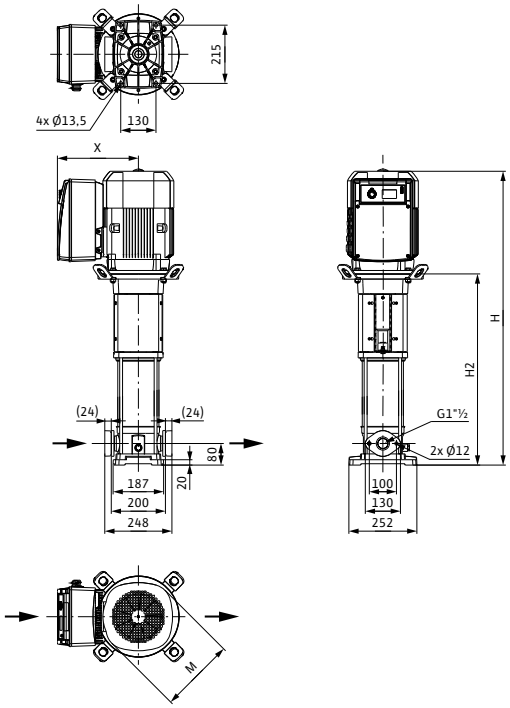

Dimension drawing

Helix VE 10, PN 25

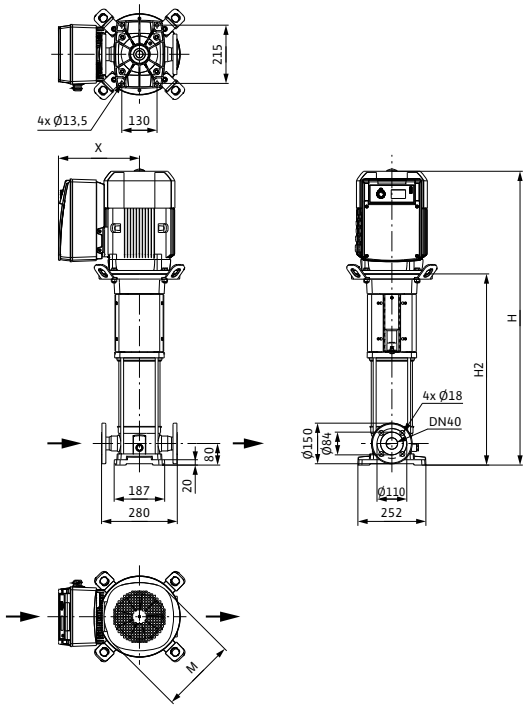

Dimensions, weights						
Wilo-Helix...	**Maximum operating pressure**	**Dimensions**				**Weight approx.**
	p_{max}	*H*	*H2*	*Ø M*	*X*	*m*
	bar	mm				kg
Helix VE 1001	16	661	417	146	237	36
Helix VE 1001	25	661	417			36

Pump curves, motor data Wilo-Helix VE

Wilo-Helix VE 1002

Minimum Efficiency Index (MEI): ≥ 0.7

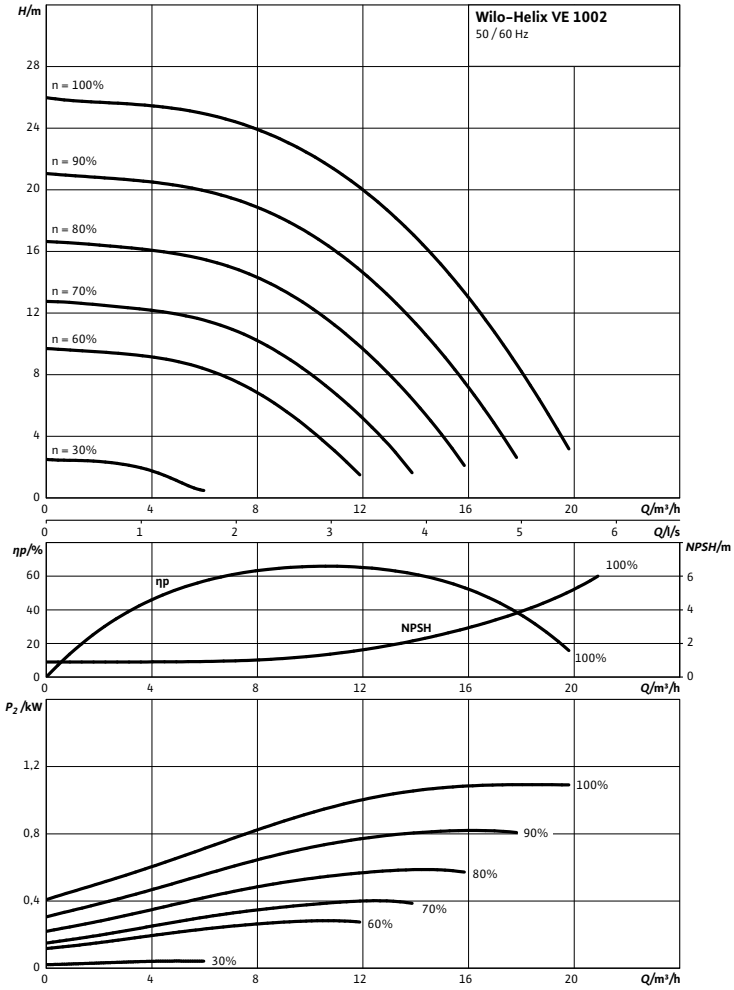

Pump curves in accordance with ISO 9906, class 2

Motor data

Wilo-Helix...	Nominal motor power	Nominal current 3~400 V, 50 Hz	Motor efficiency		
	P_2	I_N	$\eta_{m\ 50\%}$	$\eta_{m\ 75\%}$	$\eta_{m\ 100\%}$
	kW	A	%		
Helix VE 1002	1.10	3.20	79.0	82.0	82.5

Motor efficiency based on 400 V, 50 Hz

Dimensions, weights Wilo-Helix VE

Dimension drawing

Helix VE 10, PN 16

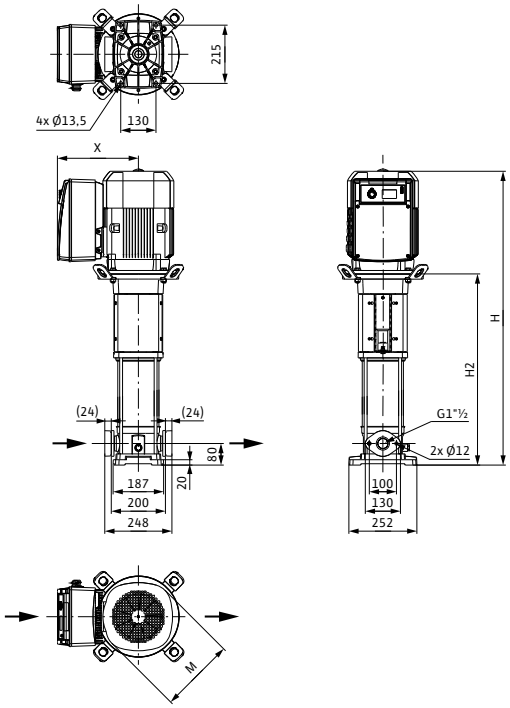

Dimension drawing

Helix VE 10, PN 25

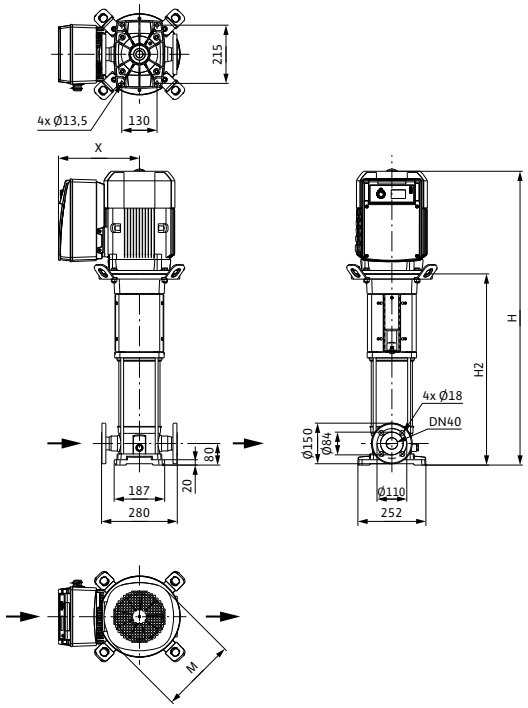

Dimensions, weights						
Wilo-Helix...	**Maximum operating pressure**	**Dimensions**				**Weight approx.**
	p_{max}	*H*	*H2*	*Ø M*	*X*	*m*
	bar	mm				kg
Helix VE 1002	16	657	417	146	237	37
Helix VE 1002	25	657	417			37

Pump curves, motor data Wilo-Helix VE

Wilo-Helix VE 1003

Minimum Efficiency Index (MEI): ≥ 0.7

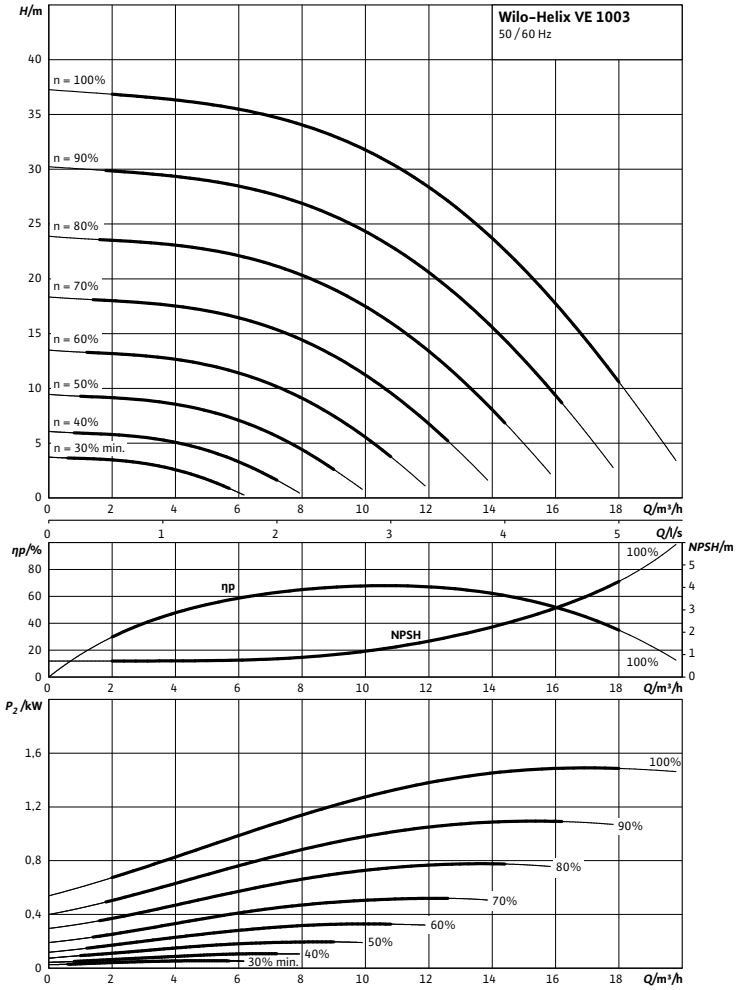

Pump curves in accordance with ISO 9906, class 2

Motor data					
Wilo-Helix...	**Nominal motor power**	**Nominal current 3~400 V, 50 Hz**	**Motor efficiency**		
	P_2	I_N	$\eta_{m\ 50\%}$	$\eta_{m\ 75\%}$	$\eta_{m\ 100\%}$
	kW	A	%		
Helix VE 1003	1.50	5.60	79.0	82.0	84.0

Motor efficiency based on 400 V, 50 Hz

Dimensions, weights Wilo-Helix VE

Dimension drawing

Helix VE 10, PN 16

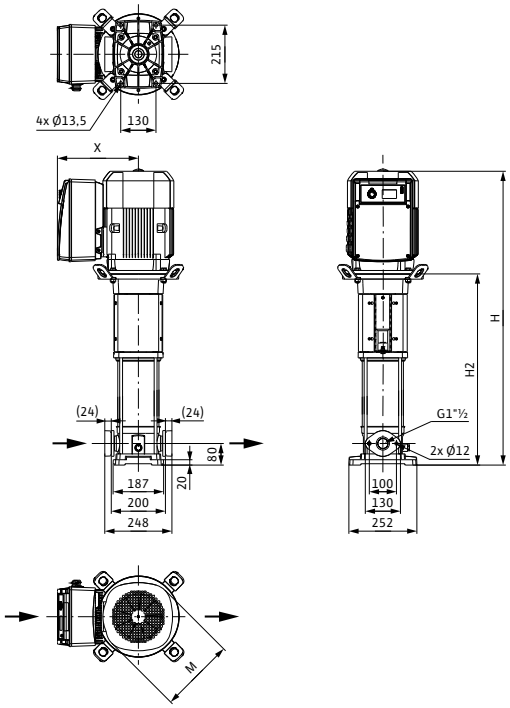

Dimension drawing

Helix VE 10, PN 25

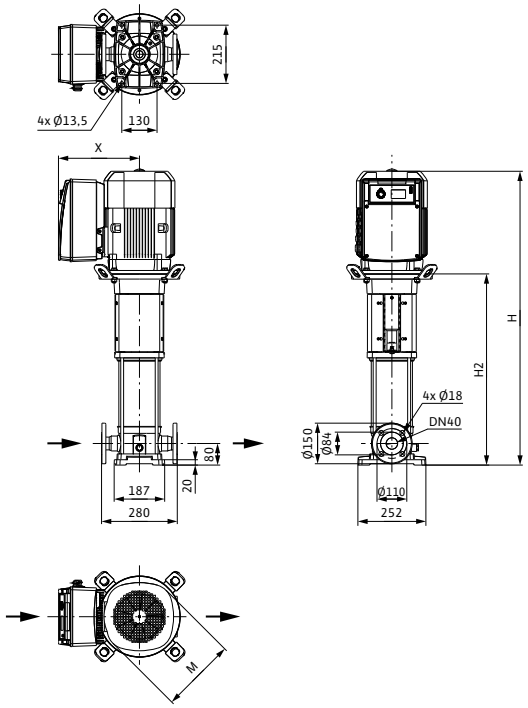

Dimensions, weights						
Wilo-Helix...	**Maximum operating pressure**	**Dimensions**				**Weight approx.**
	p_{max}	*H*	*H2*	*Ø M*	*X*	*m*
	bar	mm				kg
Helix VE 1003	16	744	465	193	254	46
Helix VE 1003	25	744	465			46

Pump curves, motor data Wilo-Helix VE

Wilo-Helix VE 1004

Minimum Efficiency Index (MEI): ≥ 0.7

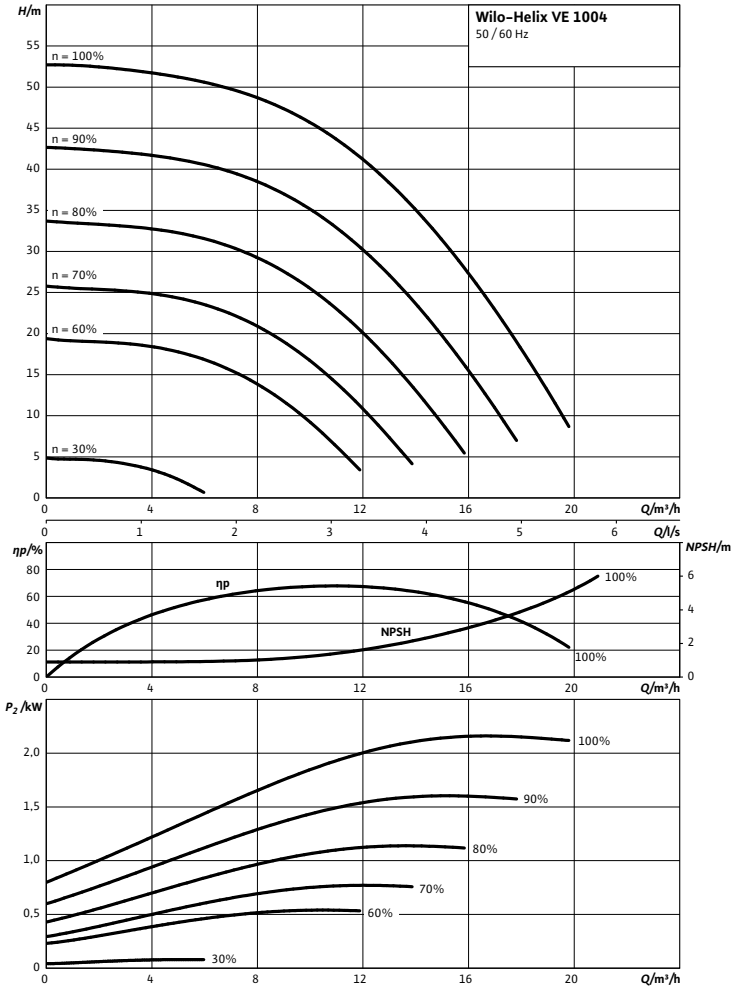

Pump curves in accordance with ISO 9906, class 2

Motor data					
Wilo-Helix...	**Nominal motor power**	**Nominal current 3~400 V, 50 Hz**	**Motor efficiency**		
	P_2	I_N	$\eta_{m\ 50\%}$	$\eta_{m\ 75\%}$	$\eta_{m\ 100\%}$
	kW	A	%		
Helix VE 1004	2.20	5.60	81.0	84.0	85.5

Motor efficiency based on 400 V, 50 Hz

Dimensions, weights Wilo-Helix VE

Dimension drawing

Helix VE 10, PN 16

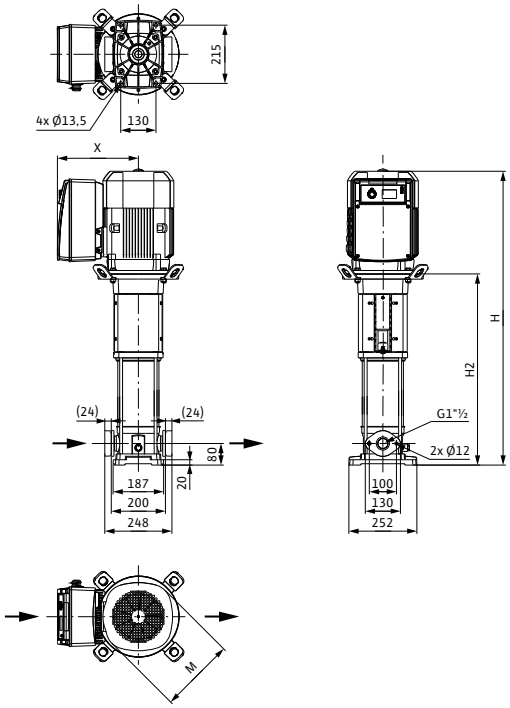

Dimension drawing

Helix VE 10, PN 25

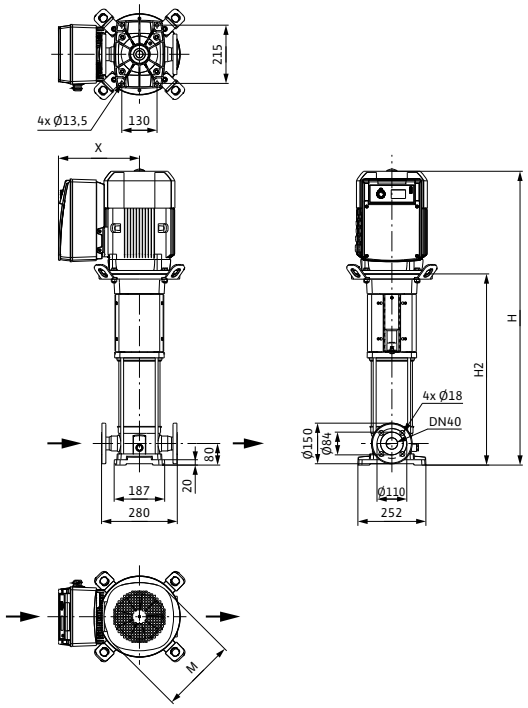

Dimensions, weights

Wilo-Helix...	Maximum operating pressure	Dimensions				Weight approx.
	p_{max}	*H*	*H2*	*Ø M*	*X*	*m*
	bar	mm				kg
Helix VE 1004	16	786	502	170	254	47
Helix VE 1004	25	786	502			47

Pump curves, motor data Wilo-Helix VE

Wilo-Helix VE 1005

Minimum Efficiency Index (MEI): ≥ 0.7

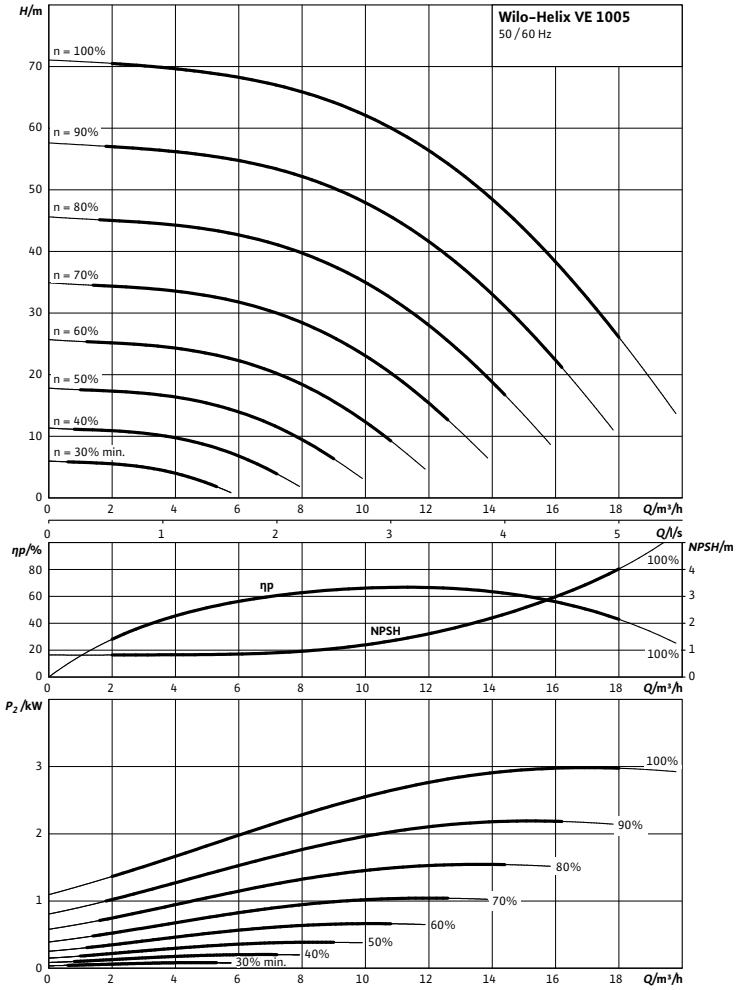

Pump curves in accordance with ISO 9906, class 2

Motor data					
Wilo-Helix...	**Nominal motor power**	**Nominal current 3~400 V, 50 Hz**	**Motor efficiency**		
	P_2	I_N	$\eta_{m\ 50\%}$	$\eta_{m\ 75\%}$	$\eta_{m\ 100\%}$
	kW	A	%		
Helix VE 1005	3.00	9.00	84.2	87.5	87.5

Motor efficiency based on 400 V, 50 Hz

Dimensions, weights Wilo-Helix VE

Dimension drawing

Helix VE 10, PN 16

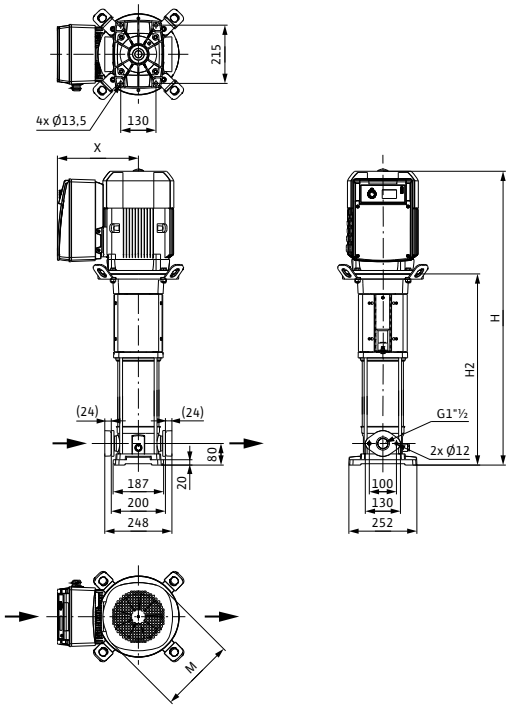

Dimension drawing

Helix VE 10, PN 25

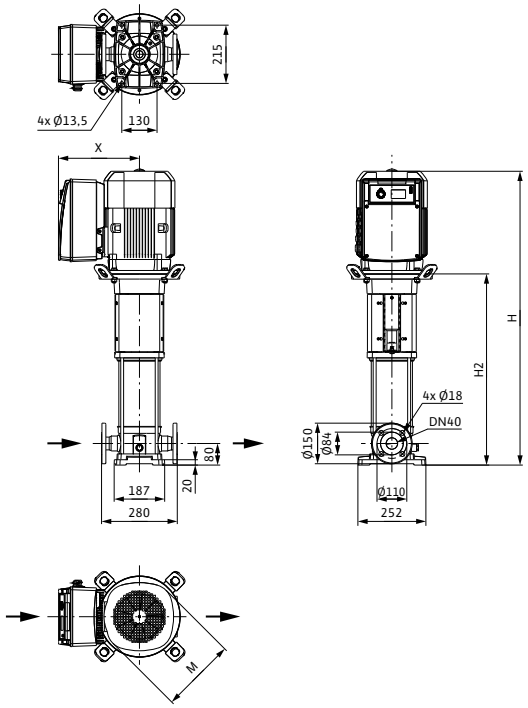

Dimensions, weights						
Wilo-Helix...	**Maximum operating pressure**	**Dimensions**				**Weight approx.**
	p_{max}	*H*	*H2*	*Ø M*	*X*	*m*
	bar	mm				kg
Helix VE 1005	16	867	550	194	265	69
Helix VE 1005	25	867	550			69

Pump curves, motor data Wilo-Helix VE

Wilo-Helix VE 1006

Minimum Efficiency Index (MEI): ≥ 0.7

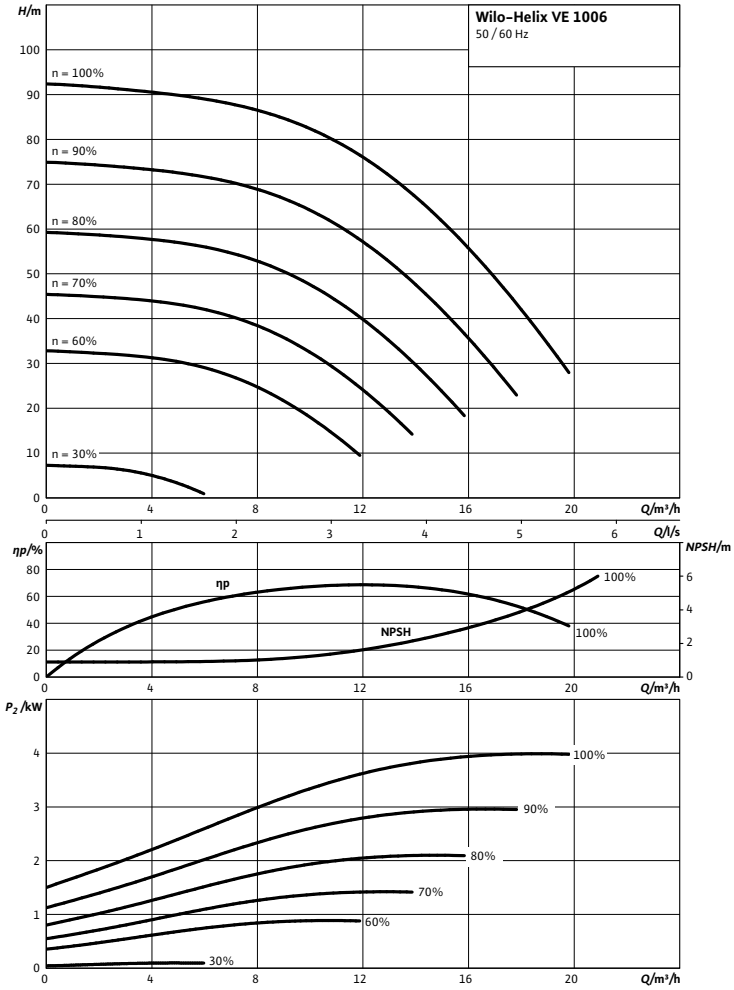

Pump curves in accordance with ISO 9906, class 2

Motor data					
Wilo-Helix...	**Nominal motor power**	**Nominal current 3~400 V, 50 Hz**	**Motor efficiency**		
	P_2	I_N	$\eta_{m\ 50\%}$	$\eta_{m\ 75\%}$	$\eta_{m\ 100\%}$
	kW	A	%		
Helix VE 1006	4.00	9.70	84.5	87.1	87.5

Motor efficiency based on 400 V, 50 Hz

Dimensions, weights Wilo-Helix VE

Dimension drawing

Helix VE 10, PN 16

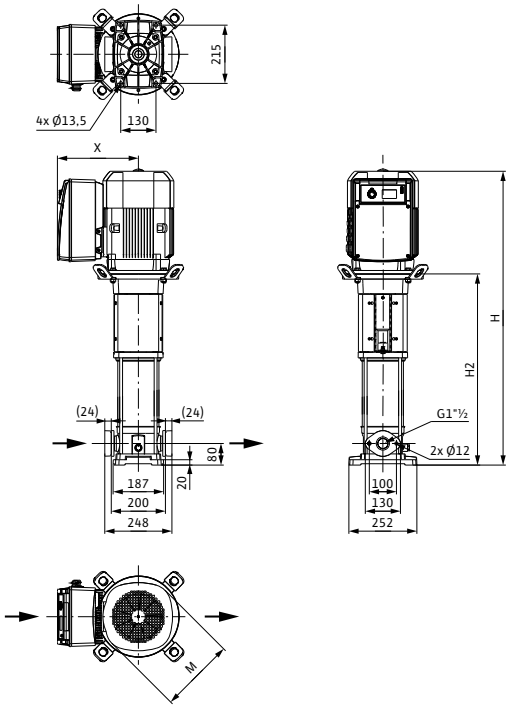

Dimension drawing

Helix VE 10, PN 25

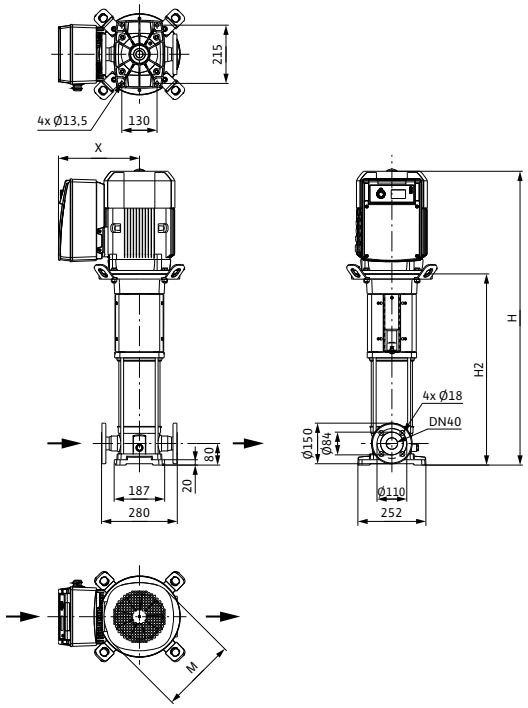

Dimensions, weights

Wilo-Helix...	Maximum operating pressure	Dimensions				Weight approx.
	p_{max}	*H*	*H2*	*Ø M*	*X*	*m*
	bar	mm				kg
Helix VE 1006	16	921	587	220	284	70
Helix VE 1006	25	921	587			70

Pump curves, motor data Wilo-Helix VE

Wilo-Helix VE 1009

Minimum Efficiency Index (MEI): ≥0.7

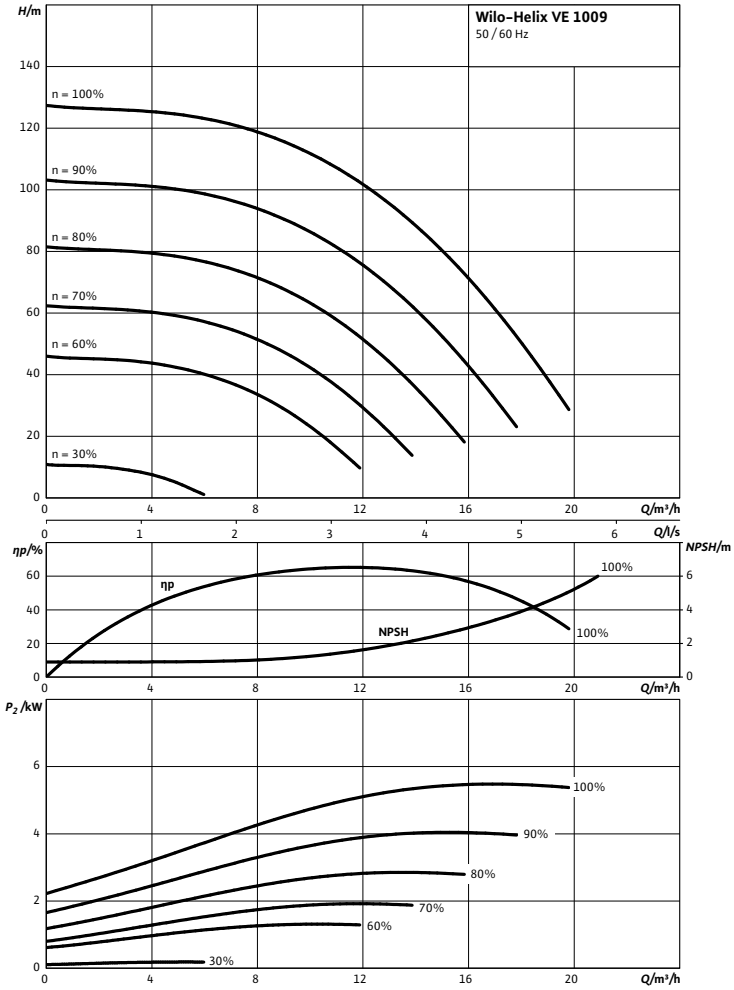

Pump curves in accordance with ISO 9906, class 2

Motor data

Wilo-Helix...	Nominal motor power	Nominal current 3~400 V, 50 Hz	Motor efficiency		
	P_2	I_N	$\eta_{m\ 50\%}$	$\eta_{m\ 75\%}$	$\eta_{m\ 100\%}$
	kW	A	%		
Helix VE 1009	5.50	11.50	85.5	87.8	88.5

Motor efficiency based on 400 V, 50 Hz

Dimensions, weights Wilo-Helix VE

Dimension drawing

Helix VE 10, PN 16

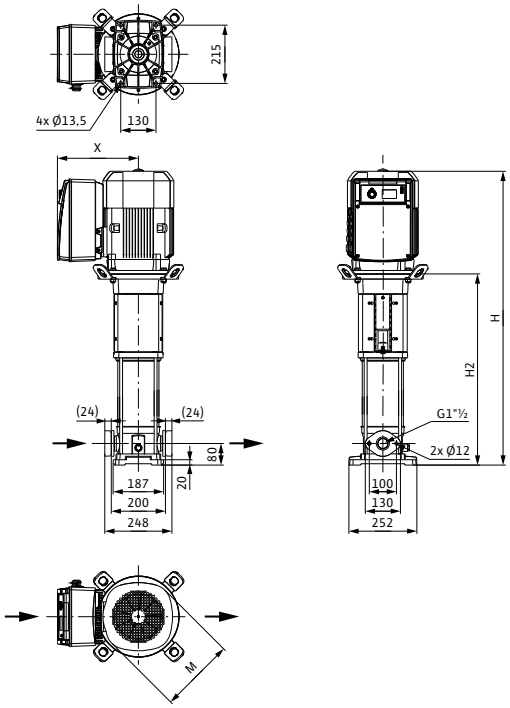

Dimension drawing

Helix VE 10, PN 25

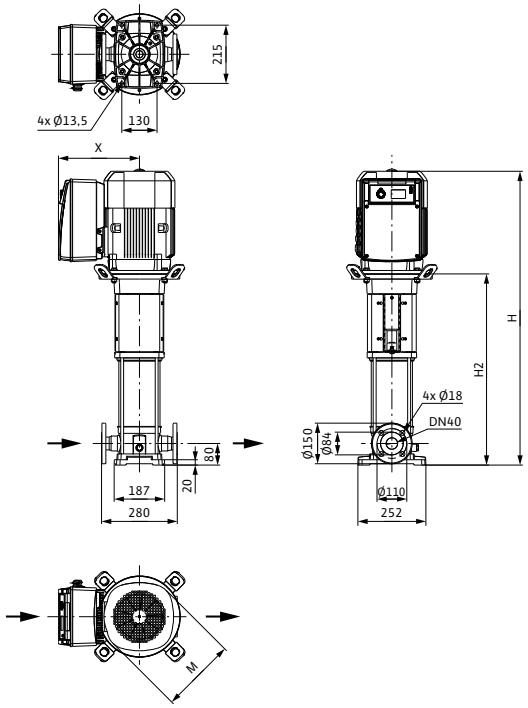

Dimensions, weights						
Wilo-Helix...	**Maximum operating pressure**	**Dimensions**				**Weight approx.**
	p_{max}	*H*	*H2*	*Ø M*	*X*	*m*
	bar	mm				kg
Helix VE 1009	16	1206	819	262	296	100
Helix VE 1009	25	1206	819			100

Pump curves, motor data Wilo-Helix VE

Wilo-Helix VE 1012

Minimum Efficiency Index (MEI): ≥ 0.7

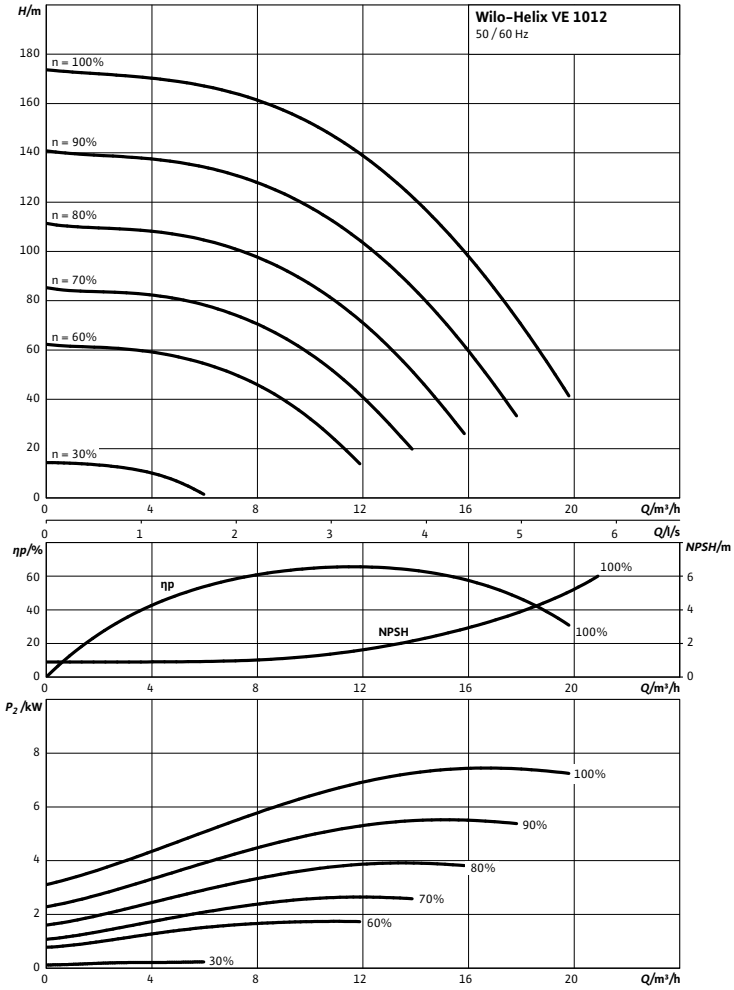

Pump curves in accordance with ISO 9906, class 2

Motor data					
Wilo-Helix...	**Nominal motor power**	**Nominal current 3~400 V, 50 Hz**	**Motor efficiency**		
	P_2	I_N	$\eta_{m\ 50\%}$	$\eta_{m\ 75\%}$	$\eta_{m\ 100\%}$
	kW	A	%		
Helix VE 1012	7.50	14.30	88.4	89.5	89.5

Motor efficiency based on 400 V, 50 Hz

Dimensions, weights Wilo-Helix VE

Dimension drawing

Helix VE 10, PN 25

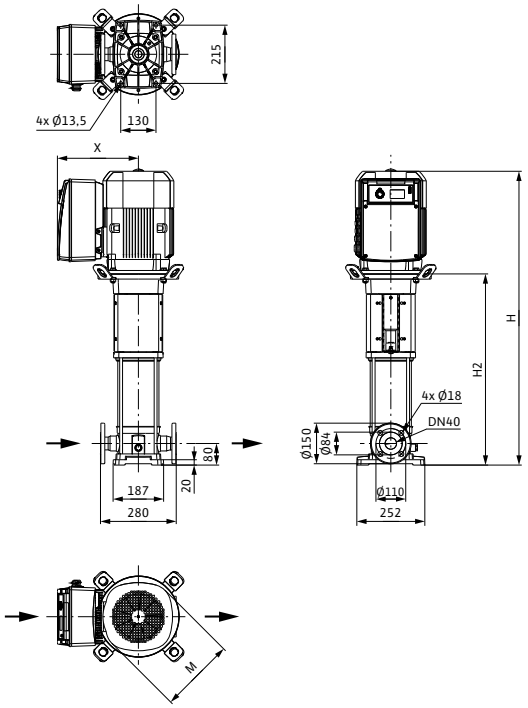

Dimensions, weights						
Wilo-Helix...	**Maximum operating pressure**	**Dimensions**				**Weight approx.**
	p_{max}	*H*	*H2*	*Ø M*	*X*	*m*
	bar	mm				kg
Helix VE 1012	25	1319	932	262	296	106

Pump curves, motor data Wilo-Helix VE

Wilo-Helix VE 1016

Minimum Efficiency Index (MEI): ≥ 0.7

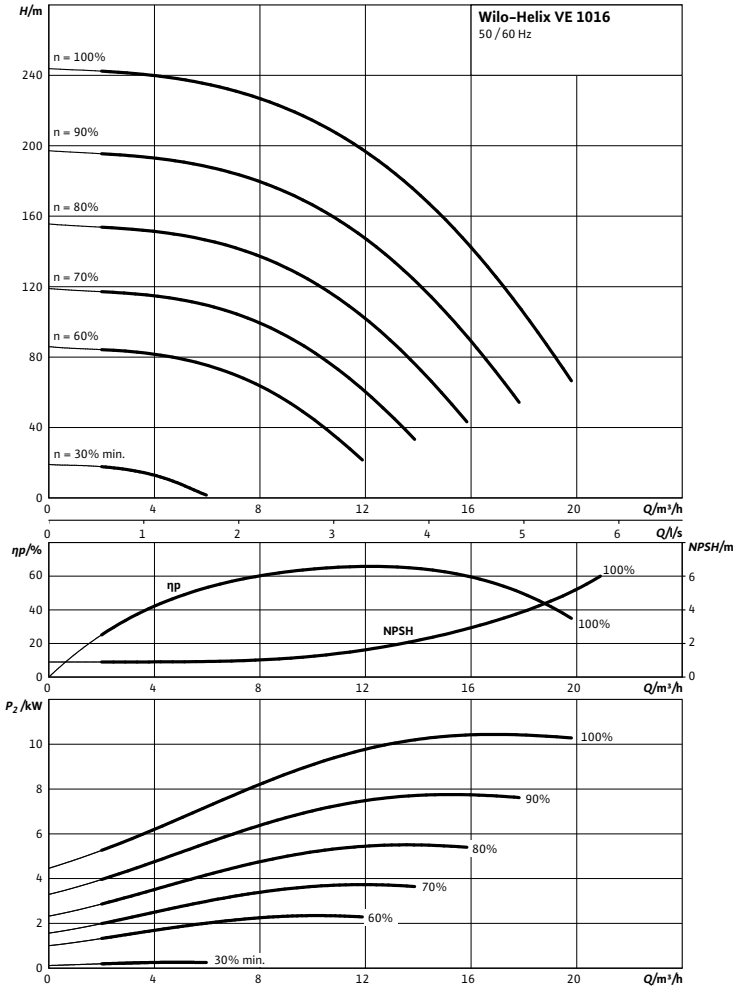

Pump curves in accordance with ISO 9906, class 2

Motor data					
Wilo-Helix...	**Nominal motor power**	**Nominal current 3~400 V, 50 Hz**	**Motor efficiency**		
	P_2	I_N	$\eta_{m\ 50\%}$	$\eta_{m\ 75\%}$	$\eta_{m\ 100\%}$
	kW	A	%		
Helix VE 1016	11.00	21.20	85.3	88.7	90.2

Motor efficiency based on 400 V, 50 Hz

Dimensions, weights Wilo-Helix VE

Dimension drawing

Helix VE 10, PN 25

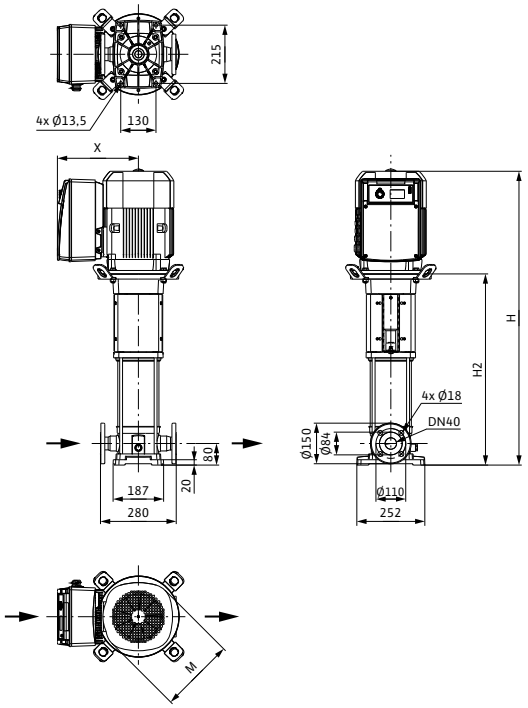

Dimensions, weights						
Wilo-Helix...	**Maximum operating pressure**	**Dimensions**				**Weight approx.**
	p_{max}	*H*	*H2*	*Ø M*	*X*	*m*
	bar	mm				kg
Helix VE 1016	25	1560	1111	302	398	176

Pump curves, motor data Wilo-Helix VE

Wilo-Helix VE 1602

Minimum Efficiency Index (MEI): ≥ 0.7

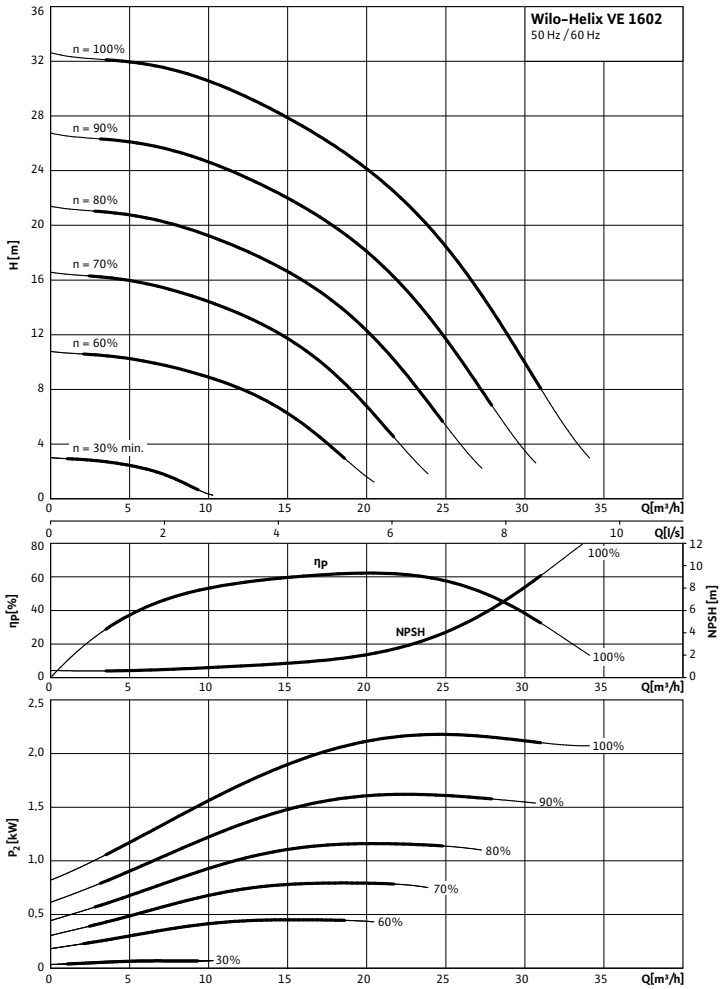

Pump curves in accordance with ISO 9906, class 2

Motor data					
Wilo-Helix...	**Nominal motor power**	**Nominal current 3~400 V, 50 Hz**	**Motor efficiency**		
	P_2	I_N	$\eta_{m\ 50\%}$	$\eta_{m\ 75\%}$	$\eta_{m\ 100\%}$
	kW	A	%		
Helix VE 1602	2.20	5.60	81.0	84.0	85.5

Motor efficiency based on 400 V, 50 Hz

Dimensions, weights Wilo-Helix VE

Dimension drawing

Helix VE 16, PN 16

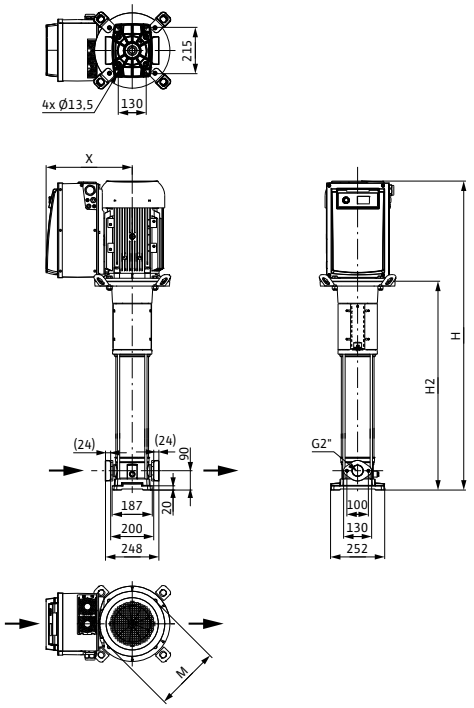

Dimension drawing

Helix VE 16, PN 25

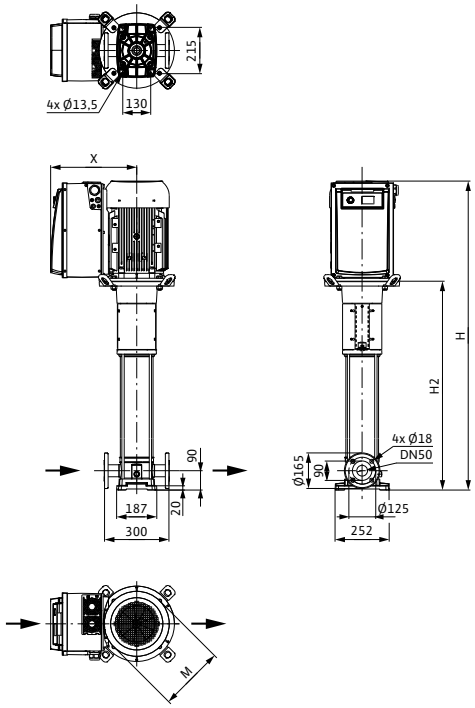

Dimensions, weights

Wilo-Helix...	Maximum operating pressure	Dimensions				Weight approx.
	p_{max}	*H*	*H2*	*Ø M*	*X*	*m*
	bar	mm				kg
Helix VE 1602	16	746	462	170	254	45
Helix VE 1602	25	746	462			45

Pump curves, motor data Wilo-Helix VE

Wilo-Helix VE 1603-3.0

Minimum Efficiency Index (MEI): ≥ 0.7

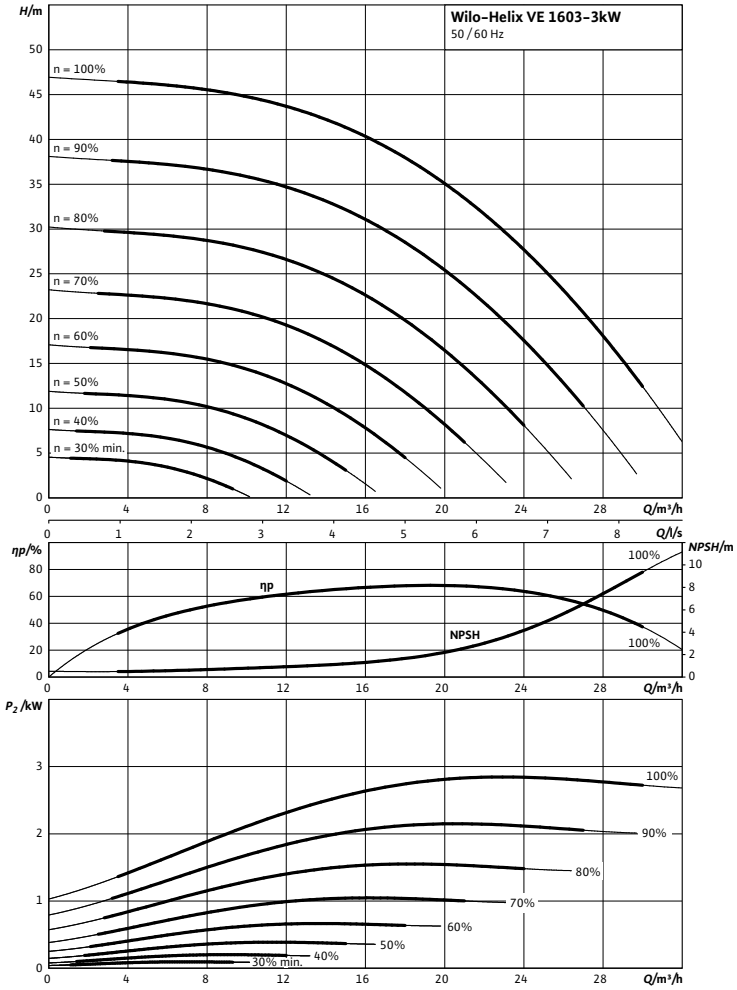

Pump curves in accordance with ISO 9906, class 2

Motor data					
Wilo-Helix...	**Nominal motor power**	**Nominal current 3~400 V, 50 Hz**	**Motor efficiency**		
	P_2	I_N	$\eta_{m\ 50\%}$	$\eta_{m\ 75\%}$	$\eta_{m\ 100\%}$
	kW	A	%		
Helix VE 1603-3.0	3.00	9.00	84.2	87.5	87.5

Motor efficiency based on 400 V, 50 Hz

Dimensions, weights Wilo-Helix VE

Dimension drawing

Helix VE 16, PN 16

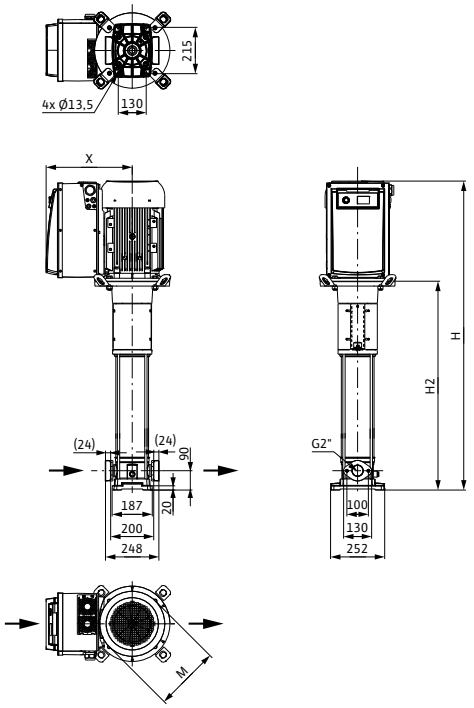

Dimension drawing

Helix VE 16, PN 25

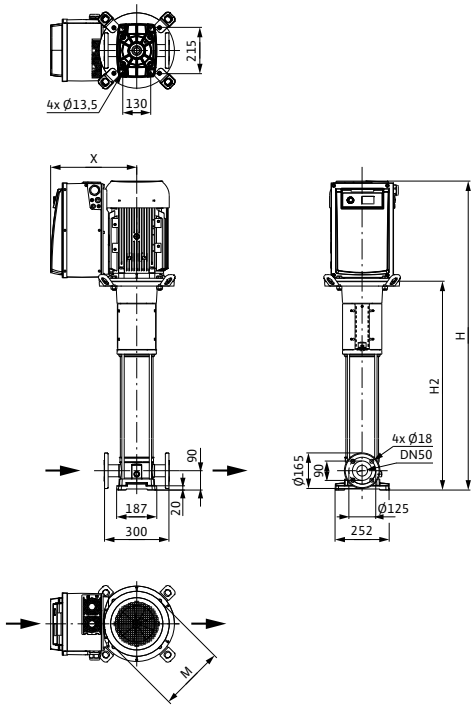

Dimensions, weights						
Wilo-Helix...	**Maximum operating pressure**	**Dimensions**				**Weight approx.**
	p_{max}	*H*	*H2*	*Ø M*	*X*	*m*
	bar	mm				kg
Helix VE 1603-3.0	16	839	522	194	265	68
Helix VE 1603-3.0	25	839	522			68

Pump curves, motor data Wilo-Helix VE

Wilo-Helix VE 1603

Minimum Efficiency Index (MEI): ≥ 0.7

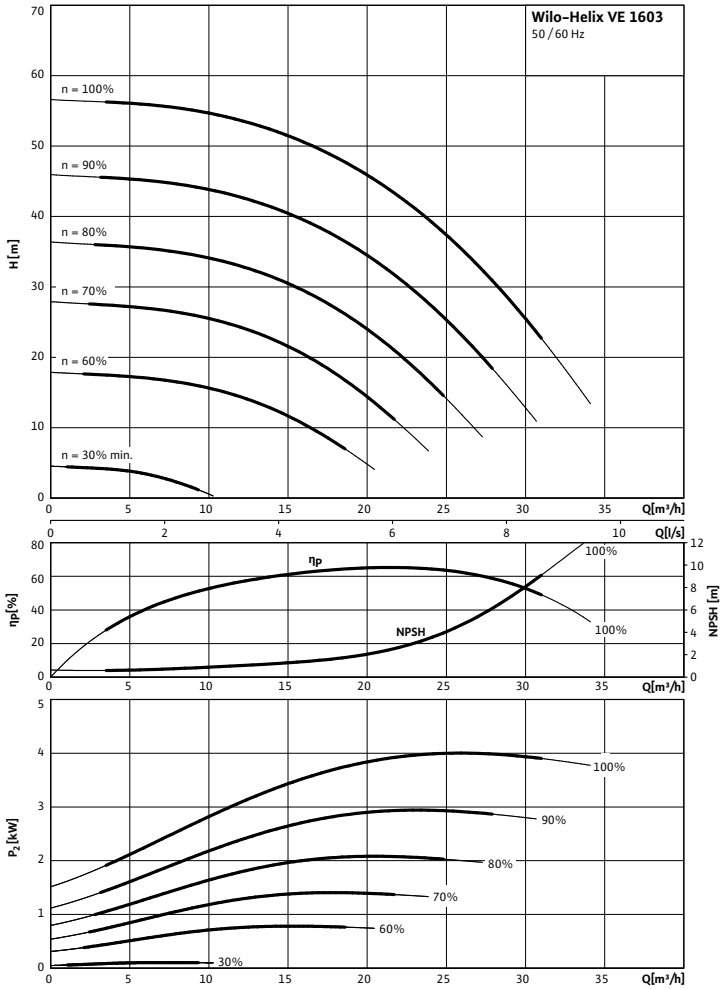

Pump curves in accordance with ISO 9906, class 2

Motor data					
Wilo-Helix...	**Nominal motor power**	**Nominal current 3~400 V, 50 Hz**	**Motor efficiency**		
	P_2	I_N	$\eta_{m\ 50\%}$	$\eta_{m\ 75\%}$	$\eta_{m\ 100\%}$
	kW	A	%		
Helix VE 1603	4.00	9.70	84.5	87.1	87.5

Motor efficiency based on 400 V, 50 Hz

Dimensions, weights Wilo-Helix VE

Dimension drawing

Helix VE 16, PN 16

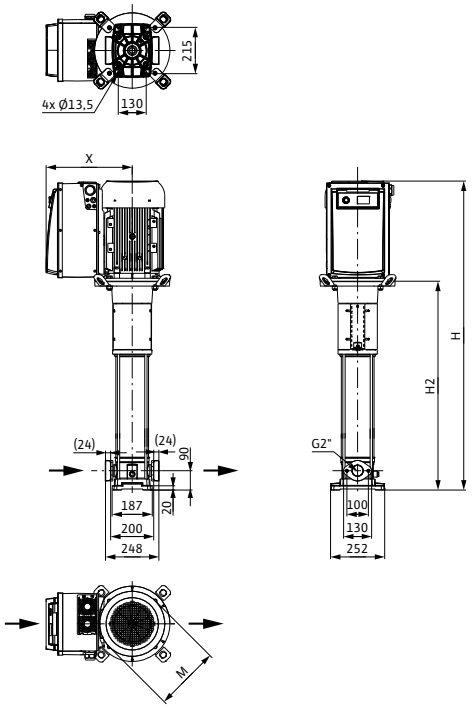

Dimension drawing

Helix VE 16, PN 25

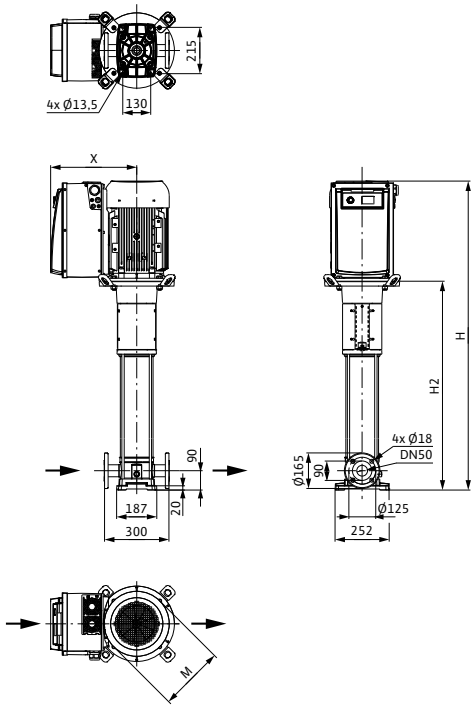

Dimensions, weights

Wilo-Helix...	Maximum operating pressure	Dimensions				Weight approx.
	p_{max}	*H*	*H2*	*Ø M*	*X*	*m*
	bar	mm				kg
Helix VE 1603	16	856	522	220	284	68
Helix VE 1603	25	856	522			68

Pump curves, motor data Wilo-Helix VE

Wilo-Helix VE 1605

Minimum Efficiency Index (MEI): ≥ 0.7

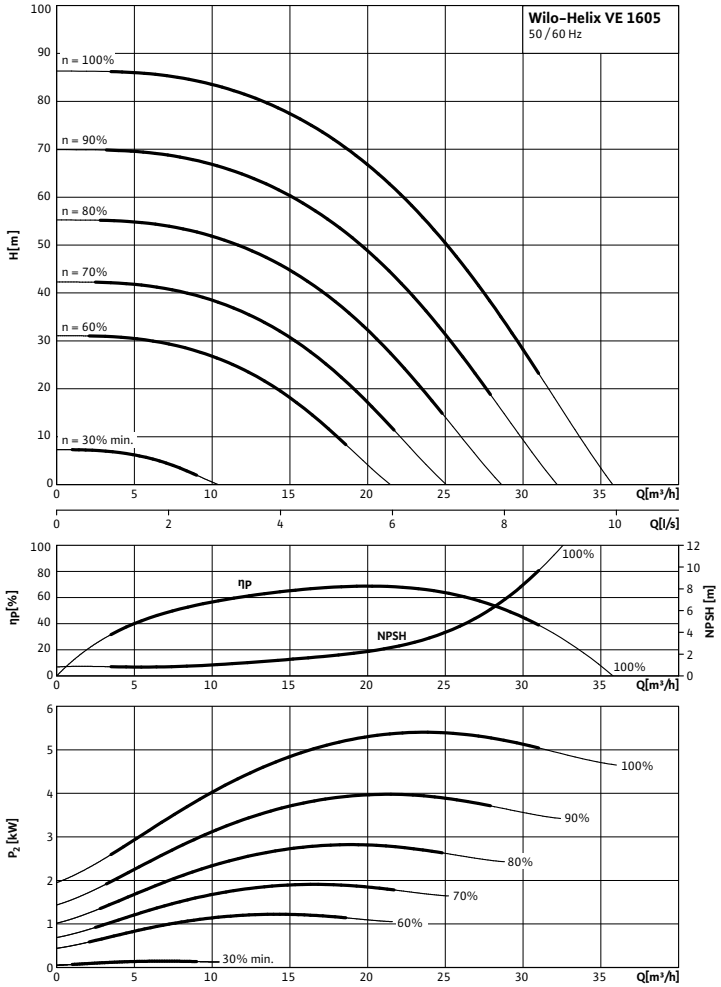

Pump curves in accordance with ISO 9906, class 2

Motor data					
Wilo-Helix...	**Nominal motor power**	**Nominal current 3~400 V, 50 Hz**	**Motor efficiency**		
	P_2	I_N	$\eta_{m\ 50\%}$	$\eta_{m\ 75\%}$	$\eta_{m\ 100\%}$
	kW	A	%		
Helix VE 1605	5.50	11.50	85.5	87.8	88.5

Motor efficiency based on 400 V, 50 Hz

Dimensions, weights Wilo-Helix VE

Dimension drawing

Helix VE 16, PN 16

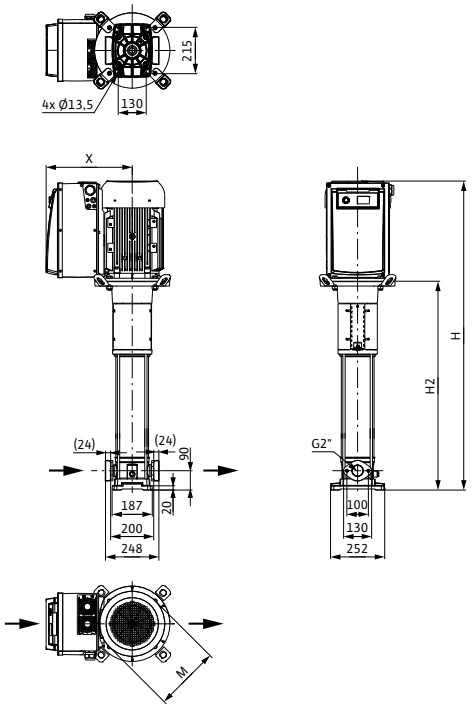

Dimension drawing

Helix VE 16, PN 25

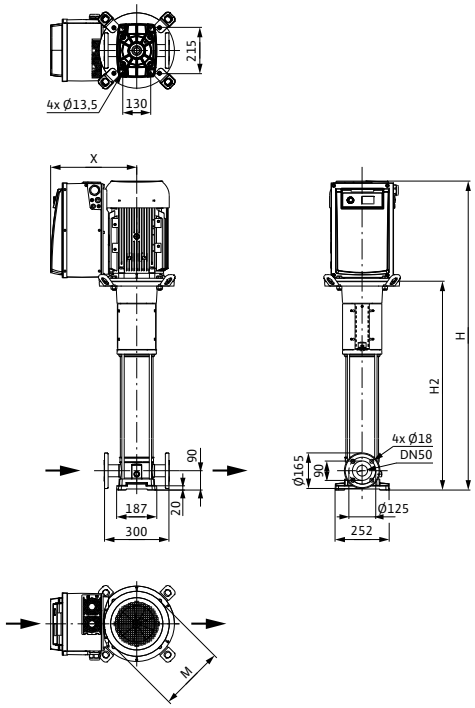

Dimensions, weights						
Wilo-Helix...	**Maximum operating pressure**	**Dimensions**				**Weight approx.**
	p_{max}	*H*	*H2*	*Ø M*	*X*	*m*
	bar	mm				kg
Helix VE 1605	16	1119	739	262	296	96
Helix VE 1605	25	1119	739			96

Pump curves, motor data Wilo-Helix VE

Wilo-Helix VE 1606

Minimum Efficiency Index (MEI): ≥ 0.7

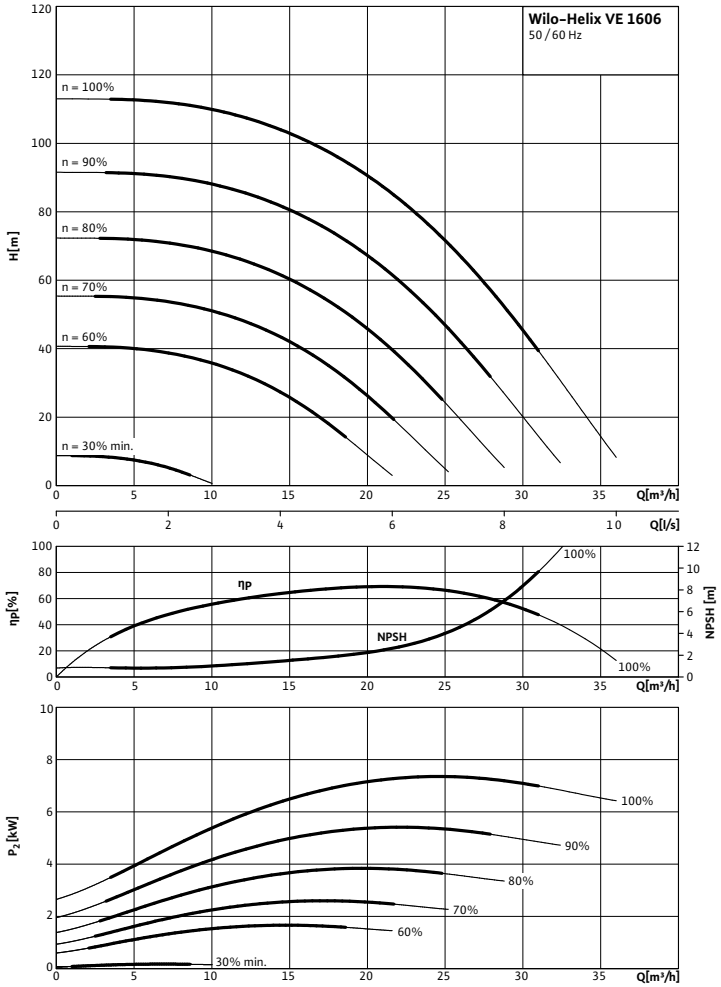

Pump curves in accordance with ISO 9906, class 2

Motor data					
Wilo-Helix...	**Nominal motor power**	**Nominal current 3~400 V, 50 Hz**	**Motor efficiency**		
	P_2	I_N	$\eta_{m\ 50\%}$	$\eta_{m\ 75\%}$	$\eta_{m\ 100\%}$
	kW	A	%		
Helix VE 1606	7.50	14.30	88.4	89.5	89.5

Motor efficiency based on 400 V, 50 Hz

Dimensions, weights Wilo-Helix VE

Dimension drawing

Helix VE 16, PN 16

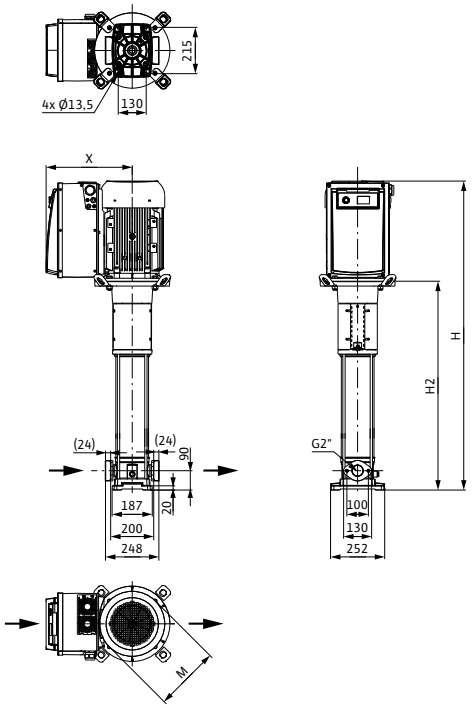

Dimension drawing

Helix VE 16, PN 25

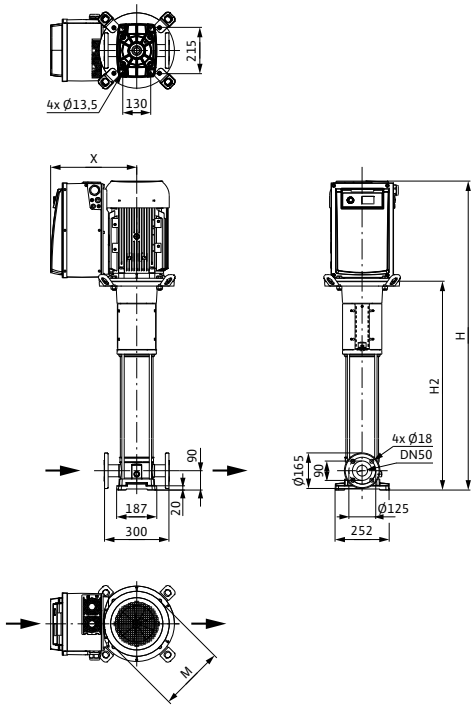

Dimensions, weights						
Wilo-Helix...	**Maximum operating pressure**	**Dimensions**				**Weight approx.**
	p_{max}	*H*	*H2*	*Ø M*	*X*	*m*
	bar	mm				kg
Helix VE 1606	16	1169	789	262	296	101
Helix VE 1606	25	1169	789			101

Pump curves, motor data Wilo-Helix VE

Wilo-Helix VE 1609

Minimum Efficiency Index (MEI): ≥ 0.7

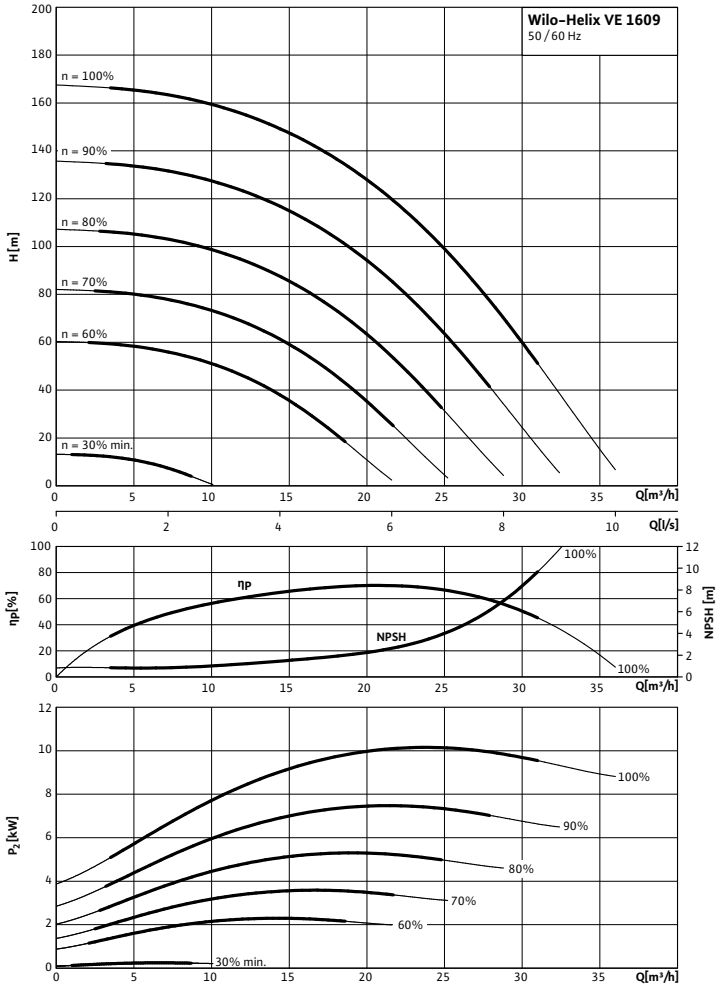

Pump curves in accordance with ISO 9906, class 2

Motor data					
Wilo-Helix...	**Nominal motor power**	**Nominal current 3~400 V, 50 Hz**	**Motor efficiency**		
	P_2	I_N	$\eta_{m\ 50\%}$	$\eta_{m\ 75\%}$	$\eta_{m\ 100\%}$
	kW	A	%		
Helix VE 1609	11.00	21.20	85.3	88.7	90.2

Motor efficiency based on 400 V, 50 Hz

Dimensions, weights Wilo-Helix VE

Dimension drawing

Helix VE 16, PN 25

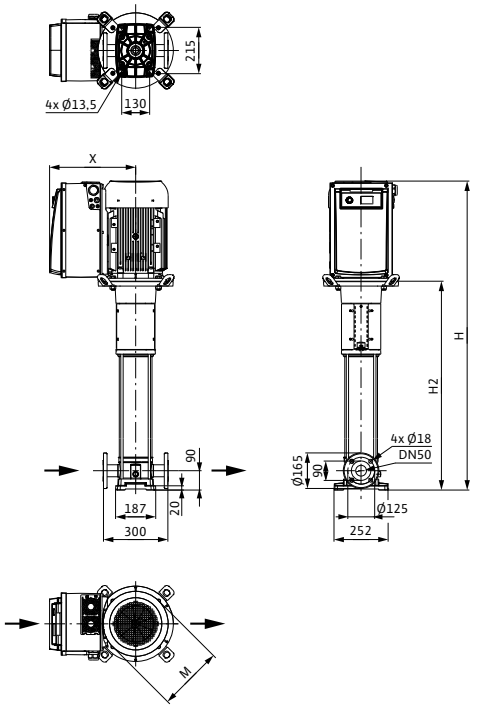

Dimensions, weights						
Wilo-Helix...	**Maximum operating pressure**	**Dimensions**				**Weight approx.**
	p_{max}	*H*	*H2*	*Ø M*	*X*	*m*
	bar	mm				kg
Helix VE 1609	25	1435	969	302	398	170

Pump curves, motor data Wilo-Helix VE

Wilo-Helix VE 1612

Minimum Efficiency Index (MEI): ≥ 0.7

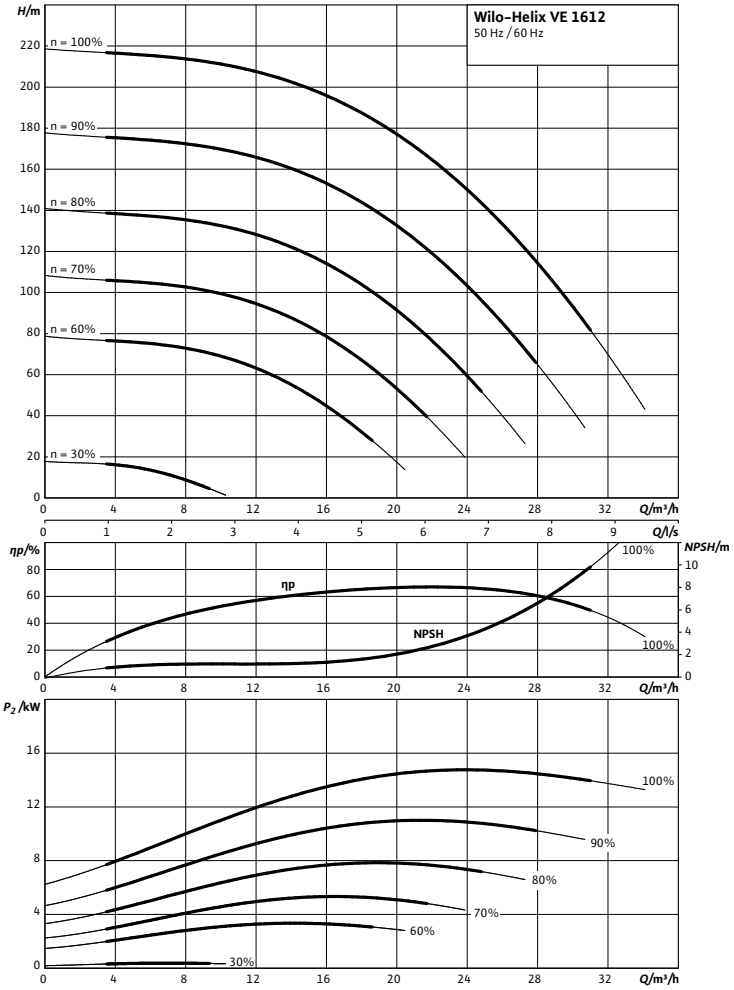

Pump curves in accordance with ISO 9906, class 2

Motor data					
Wilo-Helix...	**Nominal motor power**	**Nominal current 3~400 V, 50 Hz**	**Motor efficiency**		
	P_2	I_N	$\eta_{m\ 50\%}$	$\eta_{m\ 75\%}$	$\eta_{m\ 100\%}$
	kW	A	%		
Helix VE 1612	15.00	25.40	87.0	89.7	90.6

Motor efficiency based on 400 V, 50 Hz

Dimensions, weights Wilo-Helix VE

Dimension drawing

Helix VE 16, PN 25

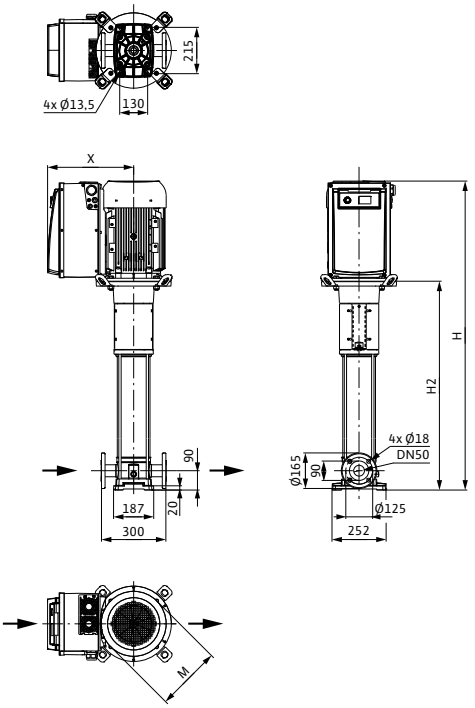

Dimensions, weights						
Wilo-Helix...	**Maximum operating pressure**	**Dimensions**				**Weight approx.**
	p_{max}	*H*	*H2*	*Ø M*	*X*	*m*
	bar	mm				kg
Helix VE 1612	25	1587	1121	302	398	173

Pump curves, motor data Wilo-Helix VE

Wilo-Helix VE 2202-3.0

Minimum Efficiency Index (MEI): ≥ 0.7

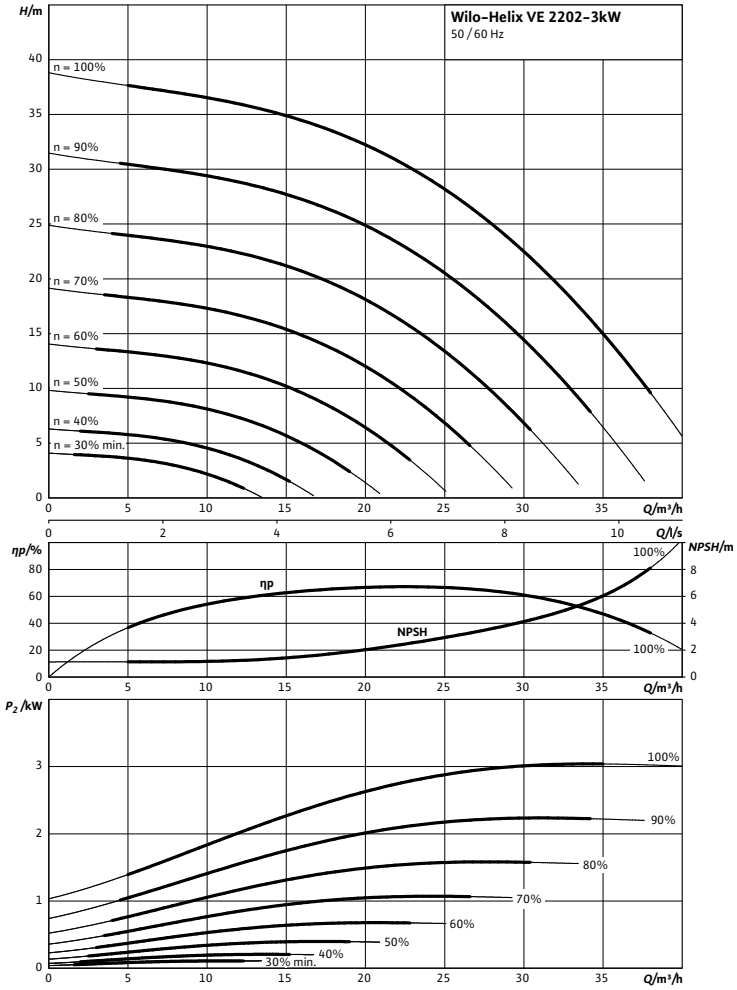

Pump curves in accordance with ISO 9906, class 2

Motor data					
Wilo-Helix...	**Nominal motor power**	**Nominal current 3~400 V, 50 Hz**	**Motor efficiency**		
	P_2	I_N	$\eta_{m\ 50\%}$	$\eta_{m\ 75\%}$	$\eta_{m\ 100\%}$
	kW	A	%		
Helix VE 2202-3.0	3.00	9.00	84.2	87.5	87.5

Motor efficiency based on 400 V, 50 Hz

Dimensions, weights Wilo-Helix VE

Dimension drawing

Helix VE 22

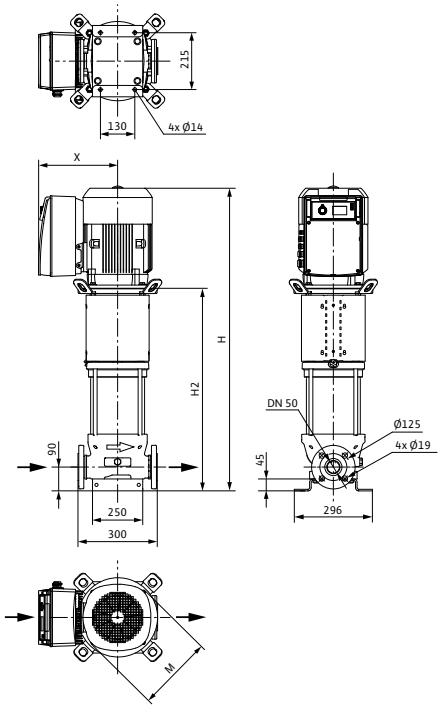

Dimensions, weights						
Wilo-Helix...	**Maximum operating pressure**	**Dimensions**				**Weight approx.**
	p_{max}	*H*	*H2*	*Ø M*	*X*	*m*
	bar	mm				kg
Helix VE 2202-3.0	16	868	551	194	265	90

Pump curves, motor data Wilo-Helix VE

Wilo-Helix VE 2202

Minimum Efficiency Index (MEI): ≥ 0.7

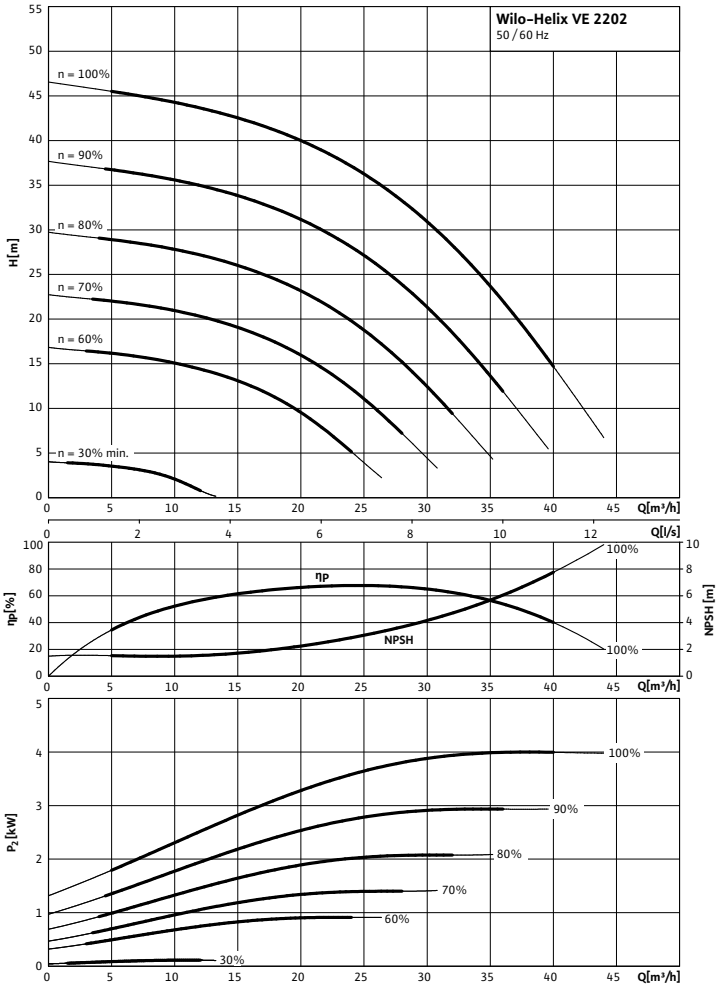

Pump curves in accordance with ISO 9906, class 2

Motor data					
Wilo-Helix...	**Nominal motor power**	**Nominal current 3~400 V, 50 Hz**	**Motor efficiency**		
	P_2	I_N	$\eta_{m\ 50\%}$	$\eta_{m\ 75\%}$	$\eta_{m\ 100\%}$
	kW	A	%		
Helix VE 2202	4.00	9.70	84.5	87.1	87.5

Motor efficiency based on 400 V, 50 Hz

Dimensions, weights Wilo-Helix VE

Dimension drawing

Helix VE 22

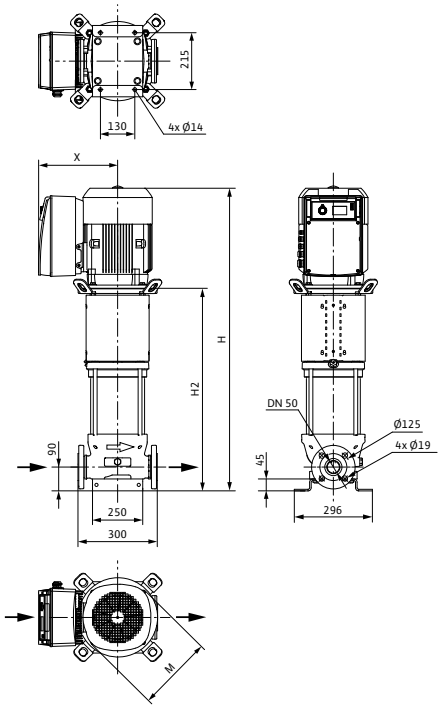

Dimensions, weights						
Wilo-Helix...	**Maximum operating pressure**	**Dimensions**				**Weight approx.**
	p_{max}	*H*	*H2*	*Ø M*	*X*	*m*
	bar	mm				kg
Helix VE 2202	16	885	551	220	284	77

Pump curves, motor data Wilo-Helix VE

Wilo-Helix VE 2203

Minimum Efficiency Index (MEI): ≥ 0.7

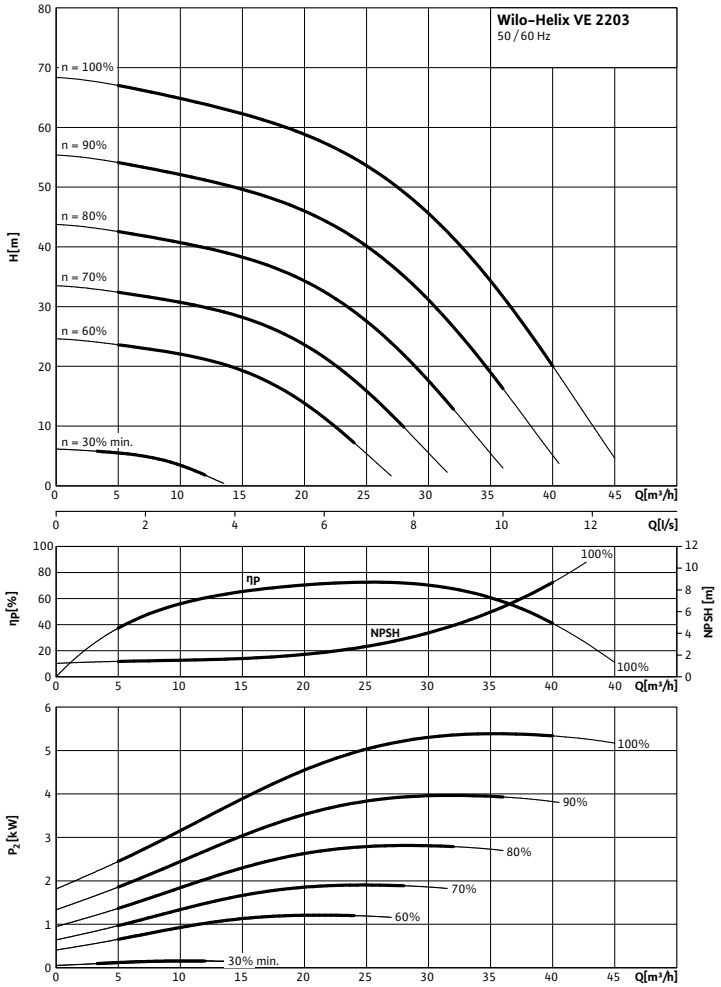

Pump curves in accordance with ISO 9906, class 2

Motor data					
Wilo-Helix...	**Nominal motor power**	**Nominal current 3~400 V, 50 Hz**	**Motor efficiency**		
	P_2	I_N	$\eta_{m\ 50\%}$	$\eta_{m\ 75\%}$	$\eta_{m\ 100\%}$
	kW	A	%		
Helix VE 2203	5.50	11.50	85.5	87.8	88.5

Motor efficiency based on 400 V, 50 Hz

Dimensions, weights Wilo-Helix VE

Dimension drawing

Helix VE 22

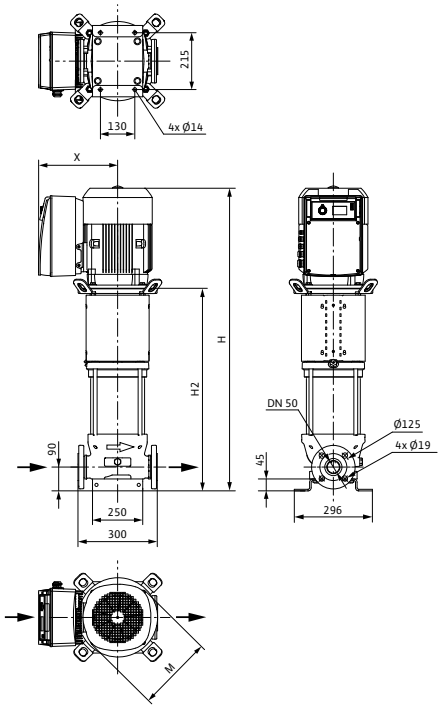

Dimensions, weights						
Wilo-Helix...	**Maximum operating pressure**	**Dimensions**				**Weight approx.**
	p_{max}	*H*	*H2*	*Ø M*	*X*	*m*
	bar	mm				kg
Helix VE 2203	16	1097	717	262	296	114
Helix VE 2203	25	1097	717			114

Pump curves, motor data Wilo-Helix VE

Wilo-Helix VE 2204

Minimum Efficiency Index (MEI): ≥ 0.7

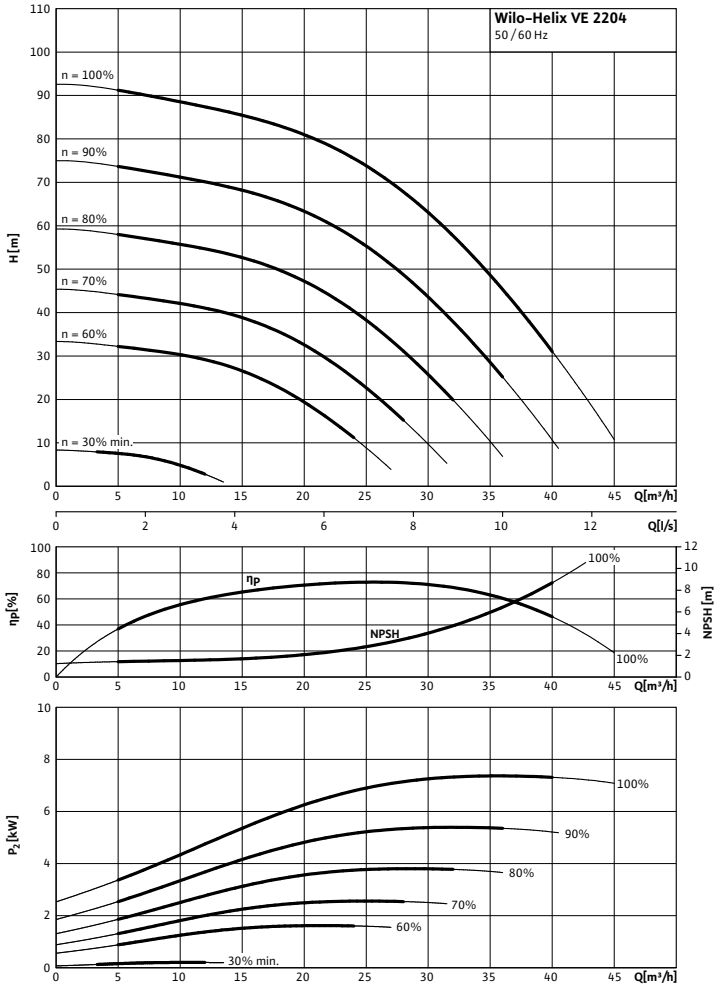

Pump curves in accordance with ISO 9906, class 2

Motor data					
Wilo-Helix...	**Nominal motor power**	**Nominal current 3~400 V, 50 Hz**	**Motor efficiency**		
	P_2	I_N	$\eta_{m\ 50\%}$	$\eta_{m\ 75\%}$	$\eta_{m\ 100\%}$
	kW	A	%		
Helix VE 2204	7.50	14.30	88.4	89.5	89.5

Motor efficiency based on 400 V, 50 Hz

Dimensions, weights Wilo-Helix VE

Dimension drawing

Helix VE 22

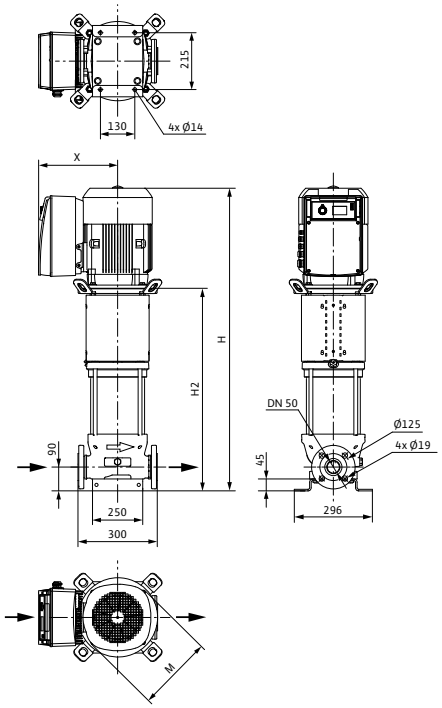

Dimensions, weights						
Wilo-Helix...	**Maximum operating pressure**	**Dimensions**				**Weight approx.**
	p_{max}	*H*	*H2*	*Ø M*	*X*	*m*
	bar	mm				kg
Helix VE 2204	16	1147	767	262	296	121
Helix VE 2204	25	1147	767			121

Pump curves, motor data Wilo-Helix VE

Wilo-Helix VE 2205

Minimum Efficiency Index (MEI): ≥ 0.7

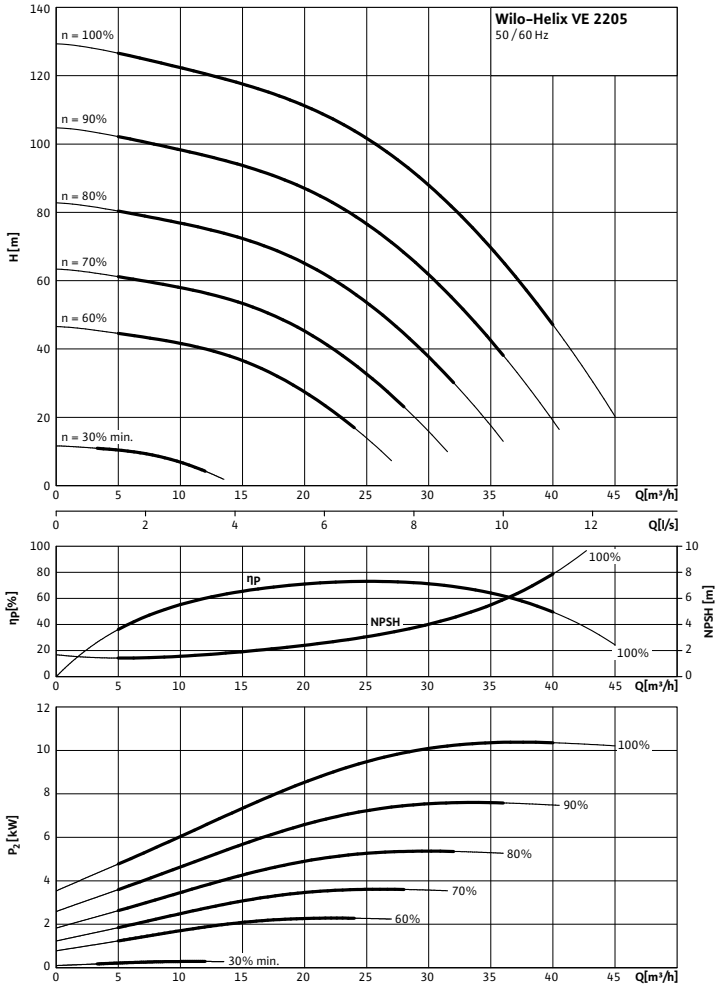

Pump curves in accordance with ISO 9906, class 2

Motor data					
Wilo-Helix...	**Nominal motor power**	**Nominal current 3~400 V, 50 Hz**	**Motor efficiency**		
	P_2	I_N	$\eta_{m\ 50\%}$	$\eta_{m\ 75\%}$	$\eta_{m\ 100\%}$
	kW	A	%		
Helix VE 2205	11.00	21.20	85.3	88.7	90.2

Motor efficiency based on 400 V, 50 Hz

Dimensions, weights Wilo-Helix VE

Dimension drawing

Helix VE 22

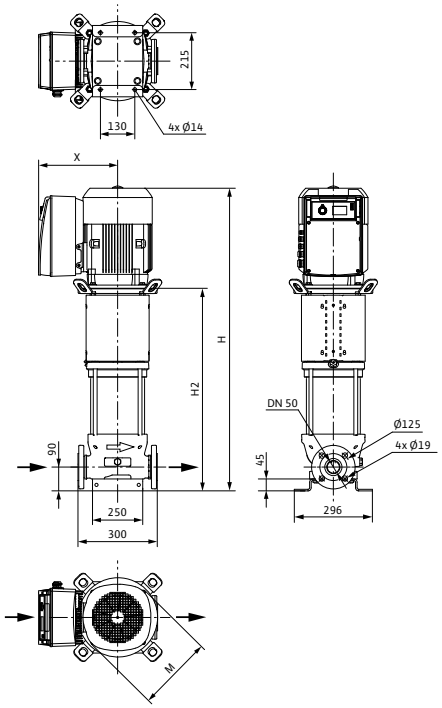

Dimensions, weights						
Wilo-Helix...	**Maximum operating pressure**	**Dimensions**				**Weight approx.**
	p_{max}	*H*	*H2*	*Ø M*	*X*	*m*
	bar	mm				kg
Helix VE 2205	16	1313	847	302	398	193
Helix VE 2205	25	1313	847			193

Pump curves, motor data Wilo-Helix VE

Wilo-Helix VE 2207

Minimum Efficiency Index (MEI): ≥ 0.7

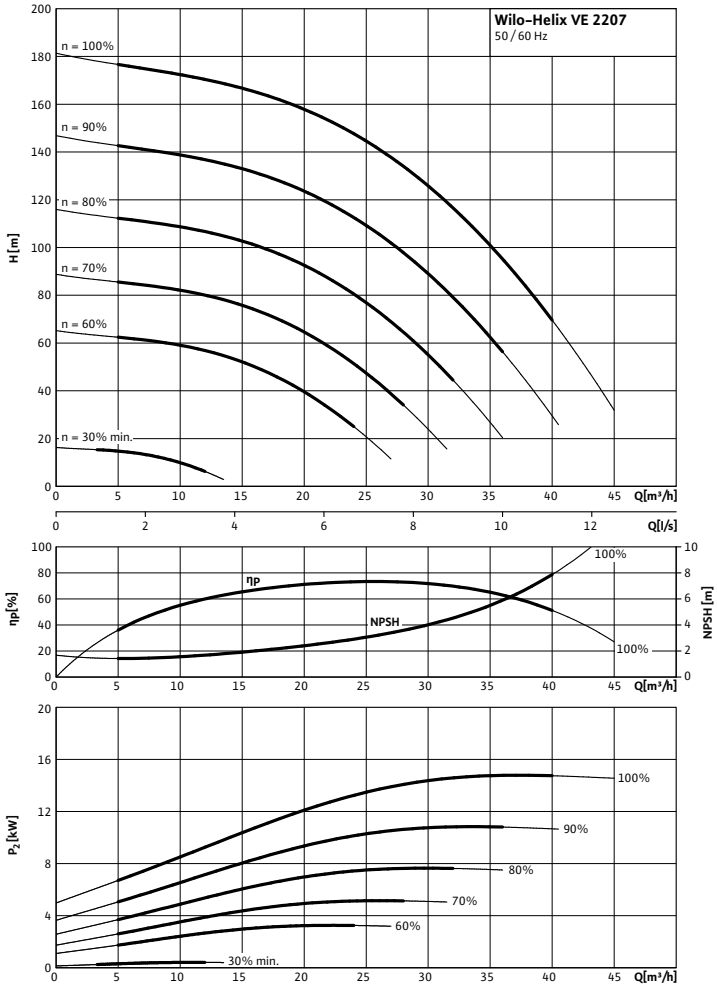

Pump curves in accordance with ISO 9906, class 2

Motor data					
Wilo-Helix...	**Nominal motor power**	**Nominal current 3~400 V, 50 Hz**	**Motor efficiency**		
	P_2	I_N	$\eta_{m\ 50\%}$	$\eta_{m\ 75\%}$	$\eta_{m\ 100\%}$
	kW	A	%		
Helix VE 2207	15.00	25.40	87.0	89.7	90.6

Motor efficiency based on 400 V, 50 Hz

Dimensions, weights Wilo-Helix VE

Dimension drawing

Helix VE 22

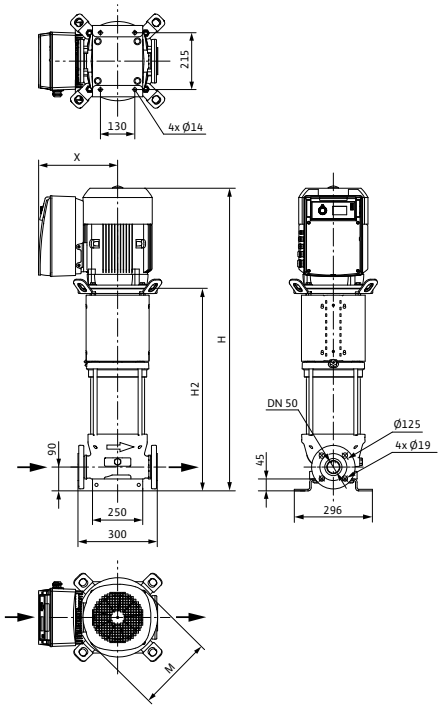

Dimensions, weights						
Wilo-Helix...	**Maximum operating pressure**	**Dimensions**				**Weight approx.**
	p_{max}	*H*	*H2*	*Ø M*	*X*	*m*
	bar	mm				kg
Helix VE 2207	25	1413	947	302	398	196

Pump curves, motor data Wilo-Helix VE

Wilo-Helix VE 2208

Minimum Efficiency Index (MEI): ≥ 0.7

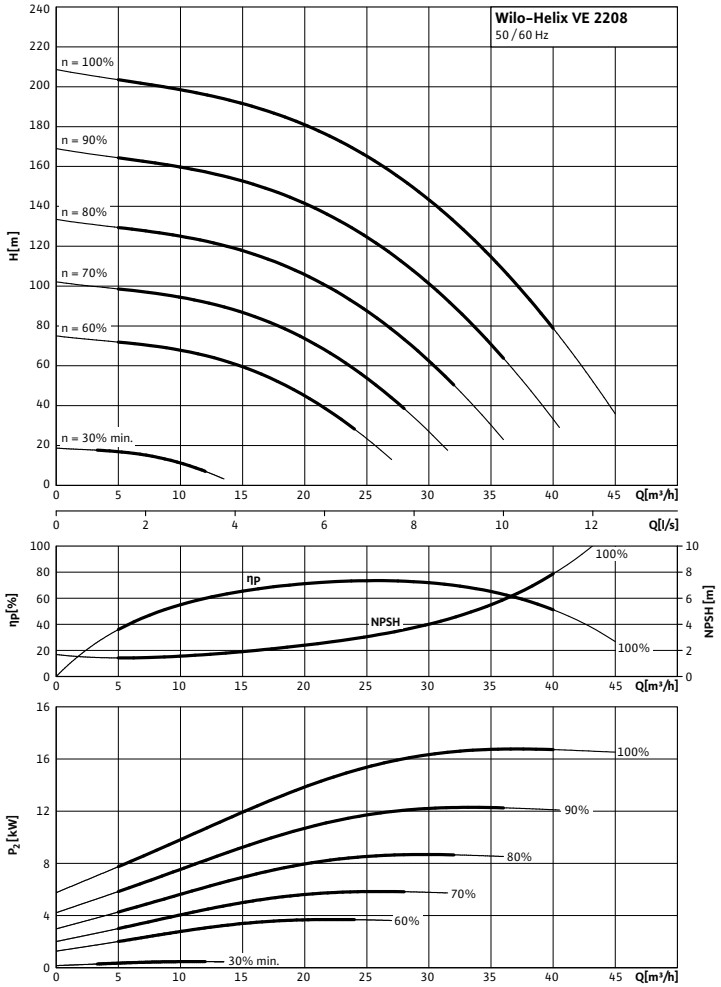

Pump curves in accordance with ISO 9906, class 2

Motor data					
Wilo-Helix...	**Nominal motor power**	**Nominal current 3~400 V, 50 Hz**	**Motor efficiency**		
	P_2	I_N	$\eta_{m\ 50\%}$	$\eta_{m\ 75\%}$	$\eta_{m\ 100\%}$
	kW	A	%		
Helix VE 2208	18.50	33.60	89.4	90.6	91.1

Motor efficiency based on 400 V, 50 Hz

Dimensions, weights Wilo-Helix VE

Dimension drawing

Helix VE 22

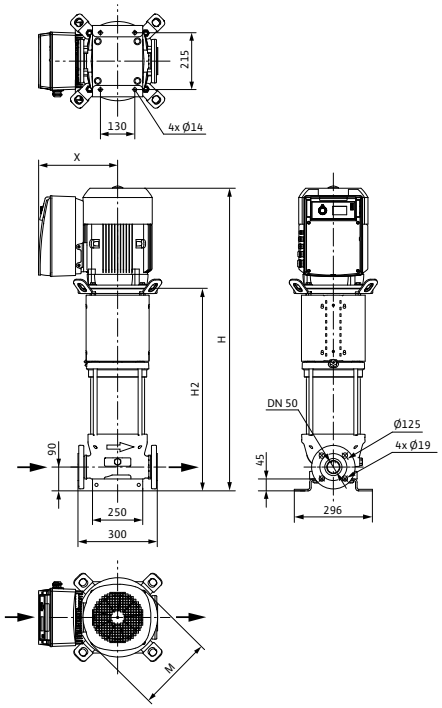

Dimensions, weights						
Wilo-Helix...	**Maximum operating pressure**	**Dimensions**				**Weight approx.**
	p_{max}	*H*	*H2*	*Ø M*	*X*	*m*
	bar	mm				kg
Helix VE 2208	25	1463	997	302	398	211

Pump curves, motor data Wilo-Helix VE

Wilo-Helix VE 2209

Minimum Efficiency Index (MEI): ≥ 0.7

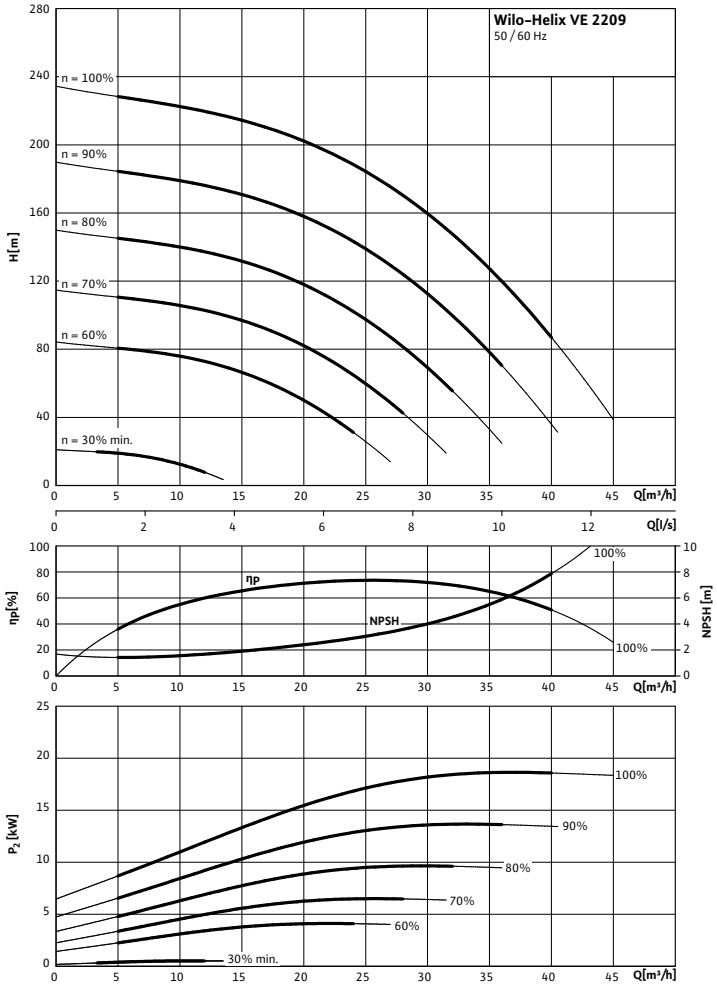

Pump curves in accordance with ISO 9906, class 2

Motor data					
Wilo-Helix...	**Nominal motor power**	**Nominal current 3~400 V, 50 Hz**	**Motor efficiency**		
	P_2	I_N	$\eta_{m\ 50\%}$	$\eta_{m\ 75\%}$	$\eta_{m\ 100\%}$
	kW	A	%		
Helix VE 2209	22.00	43.90	86.8	89.7	91.0

Motor efficiency based on 400 V, 50 Hz

Dimensions, weights Wilo-Helix VE

Dimension drawing

Helix VE 22

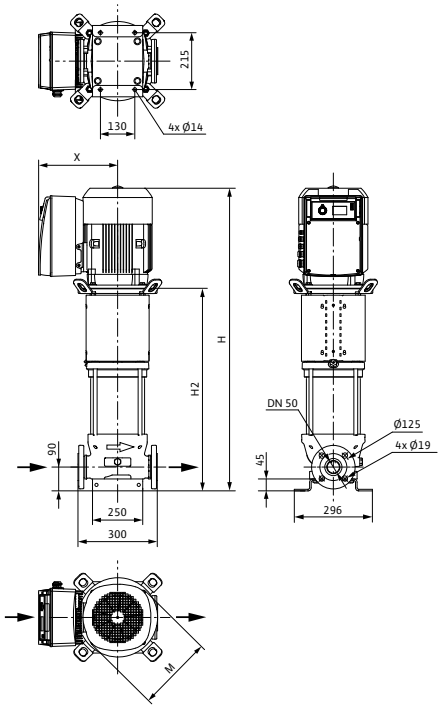

Dimensions, weights						
Wilo-Helix...	**Maximum operating pressure**	**Dimensions**				**Weight approx.**
	p_{max}	*H*	*H2*	*Ø M*	*X*	*m*
	bar	mm				kg
Helix VE 2209	25	1513	1047	302	398	214

Pump curves, motor data Wilo-Helix VE

Wilo-Helix VE 3601

Minimum Efficiency Index (MEI): ≥ 0.7

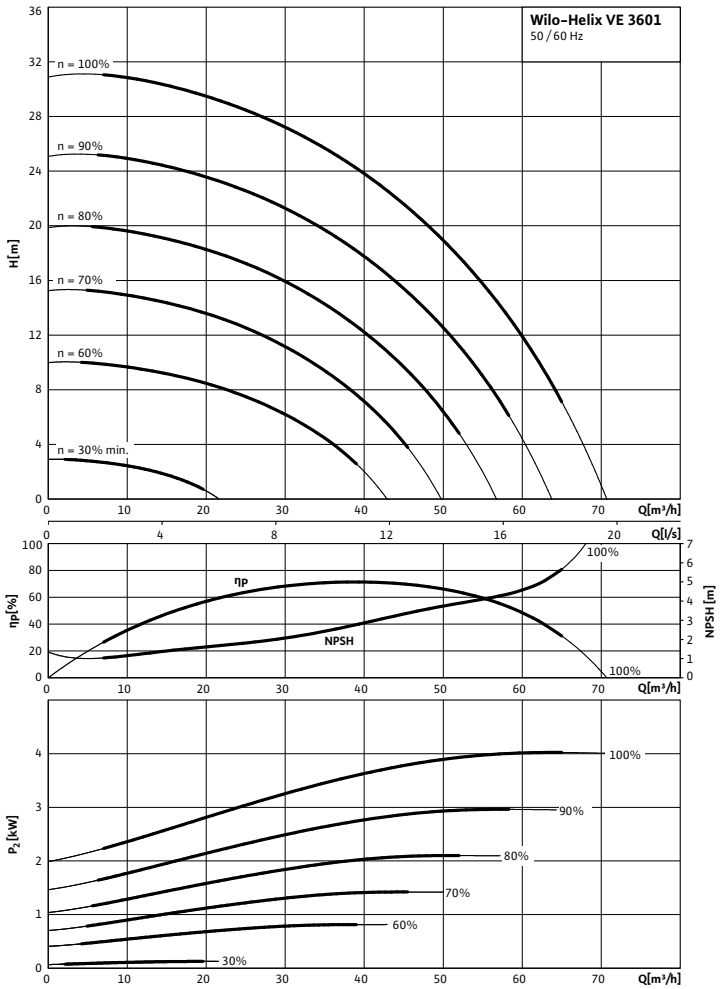

Pump curves in accordance with ISO 9906, class 2

Motor data					
Wilo-Helix...	**Nominal motor power**	**Nominal current 3~400 V, 50 Hz**	**Motor efficiency**		
	P_2	I_N	$\eta_{m\ 50\%}$	$\eta_{m\ 75\%}$	$\eta_{m\ 100\%}$
	kW	A	%		
Helix VE 3601	4.00	9.70	84.5	87.1	87.5

Motor efficiency based on 400 V, 50 Hz

Dimensions, weights Wilo-Helix VE

Dimension drawing

Helix VE 36

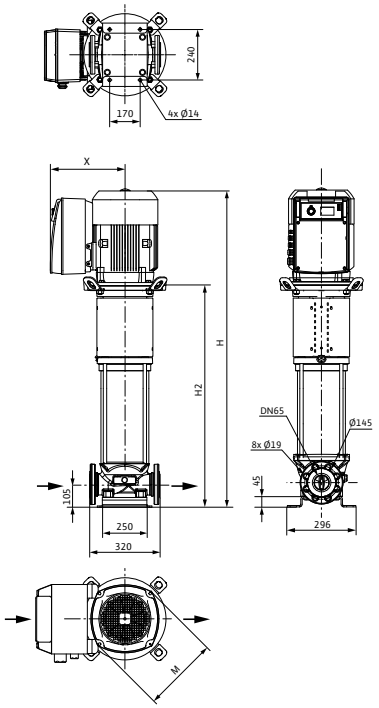

Dimensions, weights						
Wilo-Helix...	**Maximum operating pressure**	**Dimensions**				**Weight approx.**
	p_{max}	*H*	*H2*	*Ø M*	*X*	*m*
	bar	mm				kg
Helix VE 3601	16	866	532	220	284	81

Pump curves, motor data Wilo-Helix VE

Wilo-Helix VE 3602 - 5,5

Minimum Efficiency Index (MEI): ≥ 0.7

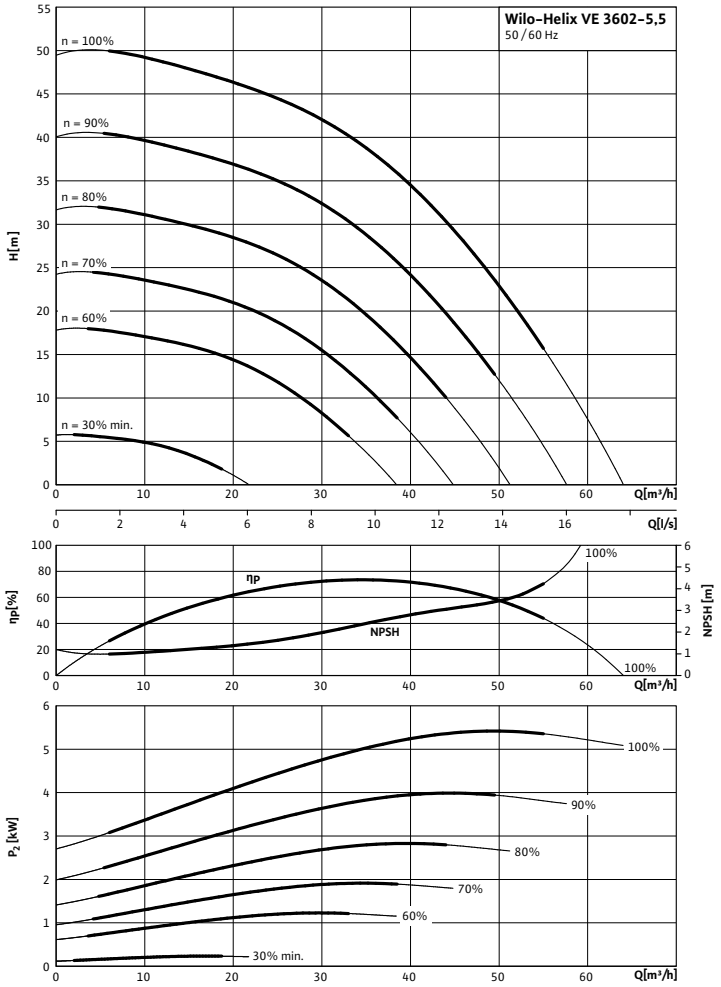

Pump curves in accordance with ISO 9906, class 2

Motor data

Wilo-Helix...	Nominal motor power	Nominal current 3~400 V, 50 Hz	Motor efficiency		
	P_2	I_N	$\eta_{m\ 50\%}$	$\eta_{m\ 75\%}$	$\eta_{m\ 100\%}$
	kW	A	%		
Helix VE 3602-5,5	5.50	11.50	88.3	88.6	87.6

Motor efficiency based on 400 V, 50 Hz

Dimensions, weights Wilo-Helix VE

Dimension drawing

Helix VE 36

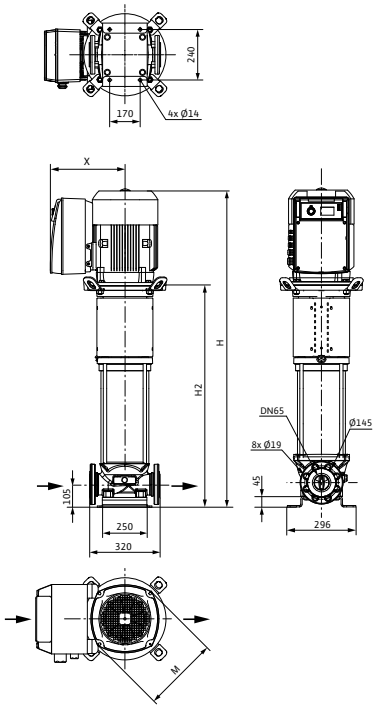

Dimensions, weights						
Wilo-Helix...	**Maximum operating pressure**	**Dimensions**				**Weight approx.**
	p_{max}	*H*	*H2*	*Ø M*	*X*	*m*
	bar	mm				kg
Helix VE 3602-5,5	16	1095	715	262	296	121

Pump curves, motor data Wilo-Helix VE

Wilo-Helix VE 3602 - 7,5

Minimum Efficiency Index (MEI): ≥0.7

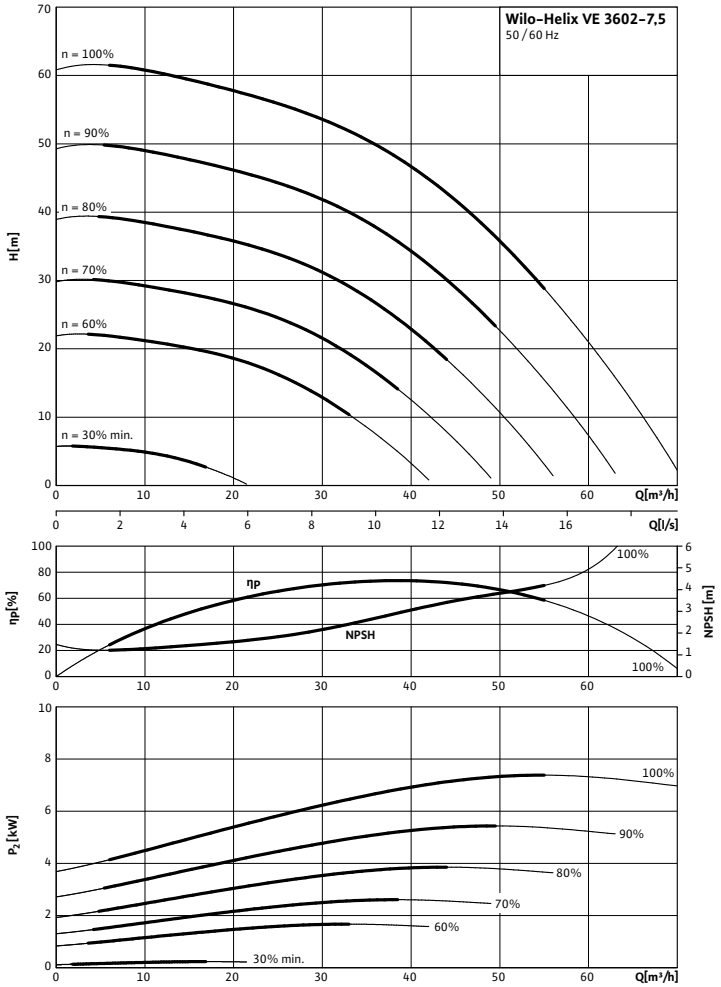

Pump curves in accordance with ISO 9906, class 2

Motor data					
Wilo-Helix...	**Nominal motor power**	**Nominal current 3~400 V, 50 Hz**	**Motor efficiency**		
	P_2	I_N	$\eta_{m\ 50\%}$	$\eta_{m\ 75\%}$	$\eta_{m\ 100\%}$
	kW	A	%		
Helix VE 3602-7,5	7.50	14.30	88.4	89.5	89.5

Motor efficiency based on 400 V, 50 Hz

Dimensions, weights Wilo-Helix VE

Dimension drawing

Helix VE 36

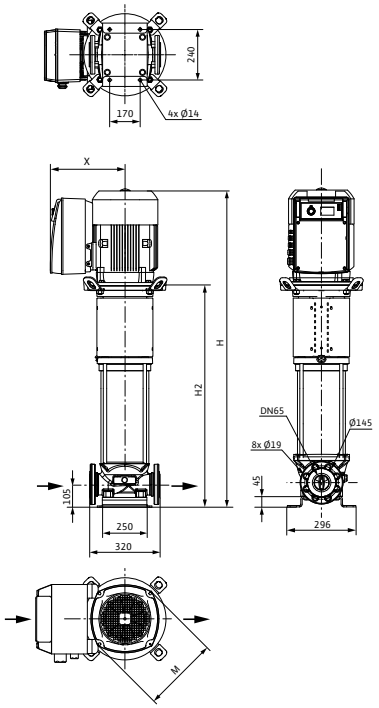

Dimensions, weights						
Wilo-Helix...	**Maximum operating pressure**	**Dimensions**				**Weight approx.**
	p_{max}	*H*	*H2*	*Ø M*	*X*	*m*
	bar	mm				kg
Helix VE 3602-7,5	16	1095	715	262	296	125

Pump curves, motor data Wilo-Helix VE

Wilo-Helix VE 3604

Minimum Efficiency Index (MEI): ≥ 0.7

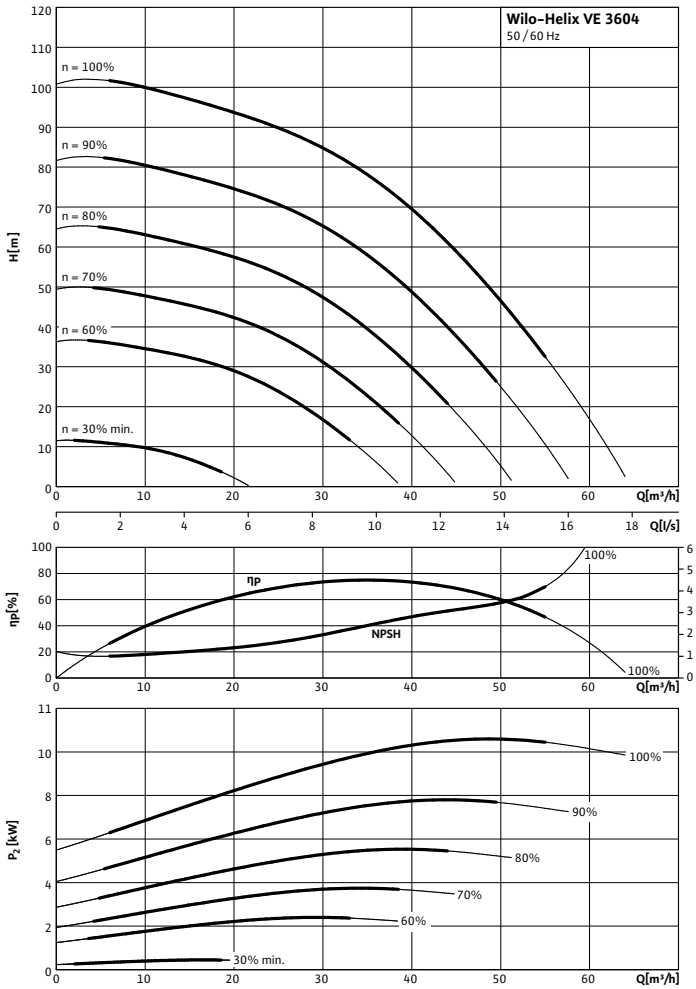

Pump curves in accordance with ISO 9906, class 2

Motor data					
Wilo-Helix...	**Nominal motor power**	**Nominal current 3~400 V, 50 Hz**	**Motor efficiency**		
	P_2	I_N	$\eta_{m\ 50\%}$	$\eta_{m\ 75\%}$	$\eta_{m\ 100\%}$
	kW	A	%		
Helix VE 3604	11.00	21.20	88.8	90.2	90.5

Motor efficiency based on 400 V, 50 Hz

Dimensions, weights Wilo-Helix VE

Dimension drawing

Helix VE 36

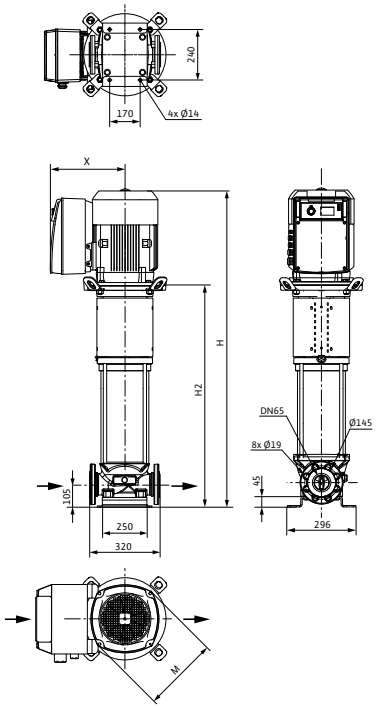

Dimensions, weights						
Wilo-Helix...	**Maximum operating pressure**	**Dimensions**				**Weight approx.**
	p_{max}	*H*	*H2*	*Ø M*	*X*	*m*
	bar	mm				kg
Helix VE 3604	16	1344	878	302	398	206
Helix VE 3604	25	1344	878			206

Pump curves, motor data Wilo-Helix VE

Wilo-Helix VE 3605

Minimum Efficiency Index (MEI): ≥ 0.7

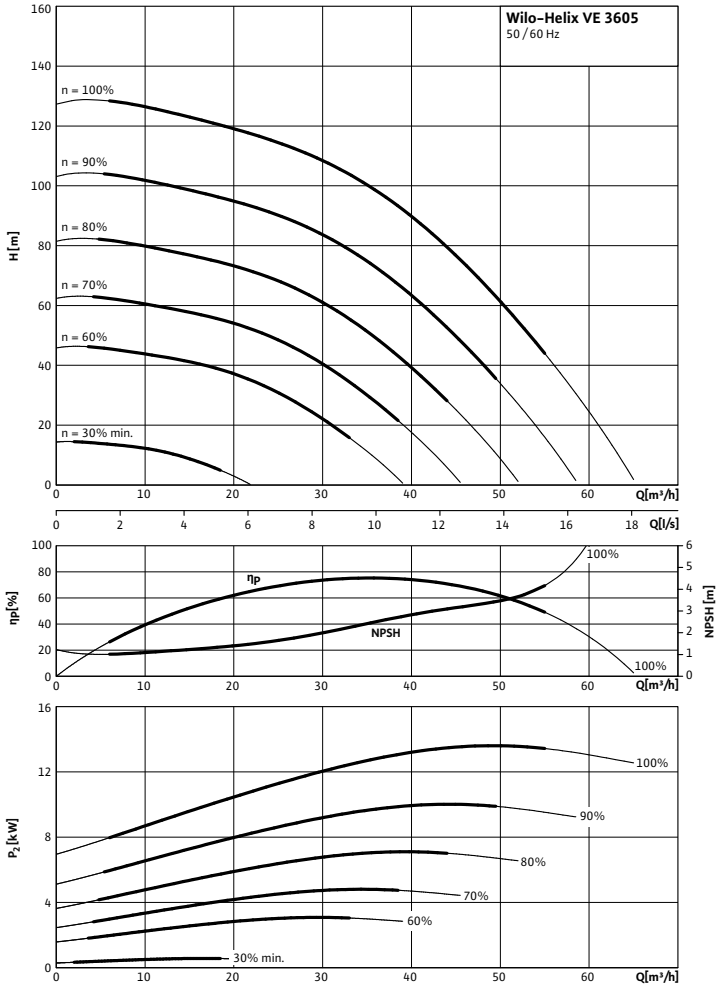

Pump curves in accordance with ISO 9906, class 2

Motor data					
Wilo-Helix...	**Nominal motor power**	**Nominal current 3~400 V, 50 Hz**	**Motor efficiency**		
	P_2	I_N	$\eta_{m\ 50\%}$	$\eta_{m\ 75\%}$	$\eta_{m\ 100\%}$
	kW	A	%		
Helix VE 3605	15.00	25.40	90.6	91.1	90.7

Motor efficiency based on 400 V, 50 Hz

Dimensions, weights Wilo-Helix VE

Dimension drawing

Helix VE 36

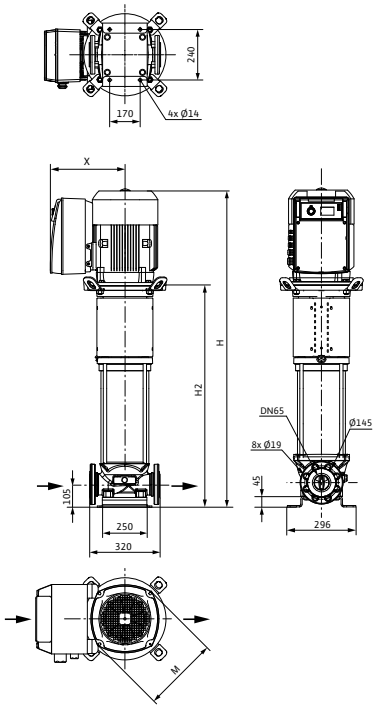

Dimensions, weights						
Wilo-Helix...	**Maximum operating pressure**	**Dimensions**				**Weight approx.**
	p_{max}	*H*	*H2*	*Ø M*	*X*	*m*
	bar	mm				kg
Helix VE 3605	16	1411	945	302	398	215
Helix VE 3605	25	1411	945			215

Pump curves, motor data Wilo-Helix VE

Wilo-Helix VE 3607

Minimum Efficiency Index (MEI): ≥ 0.7

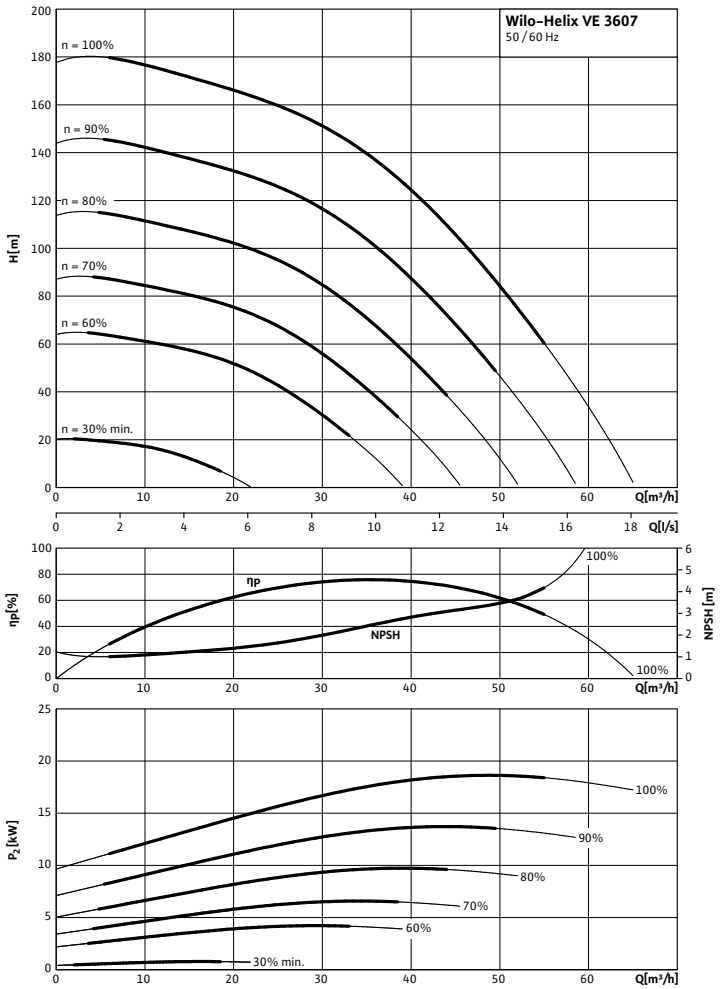

Pump curves in accordance with ISO 9906, class 2

Motor data					
Wilo-Helix...	**Nominal motor power**	**Nominal current 3~400 V, 50 Hz**	**Motor efficiency**		
	P_2	I_N	$\eta_{m\ 50\%}$	$\eta_{m\ 75\%}$	$\eta_{m\ 100\%}$
	kW	A	%		
Helix VE 3607	18.50	33.60	91.2	91.8	91.4

Motor efficiency based on 400 V, 50 Hz

Dimensions, weights Wilo-Helix VE

Dimension drawing

Helix VE 36

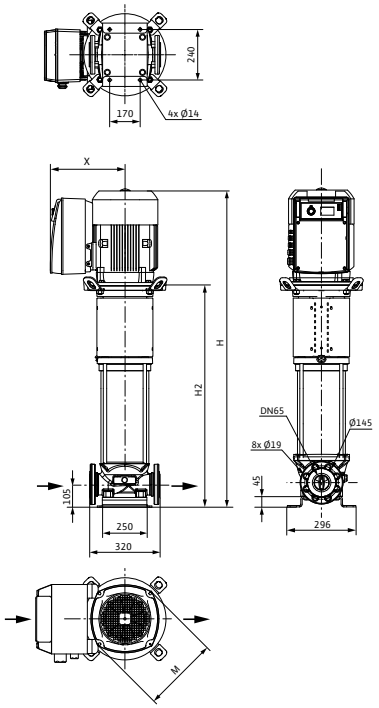

Dimensions, weights						
Wilo-Helix...	**Maximum operating pressure**	**Dimensions**				**Weight approx.**
	p_{max}	*H*	*H2*	*Ø M*	*X*	*m*
	bar	mm				kg
Helix VE 3607	25	1544	1078	302	398	235

Pump curves, motor data Wilo-Helix VE

Wilo-Helix VE 3608

Minimum Efficiency Index (MEI): ≥ 0.7

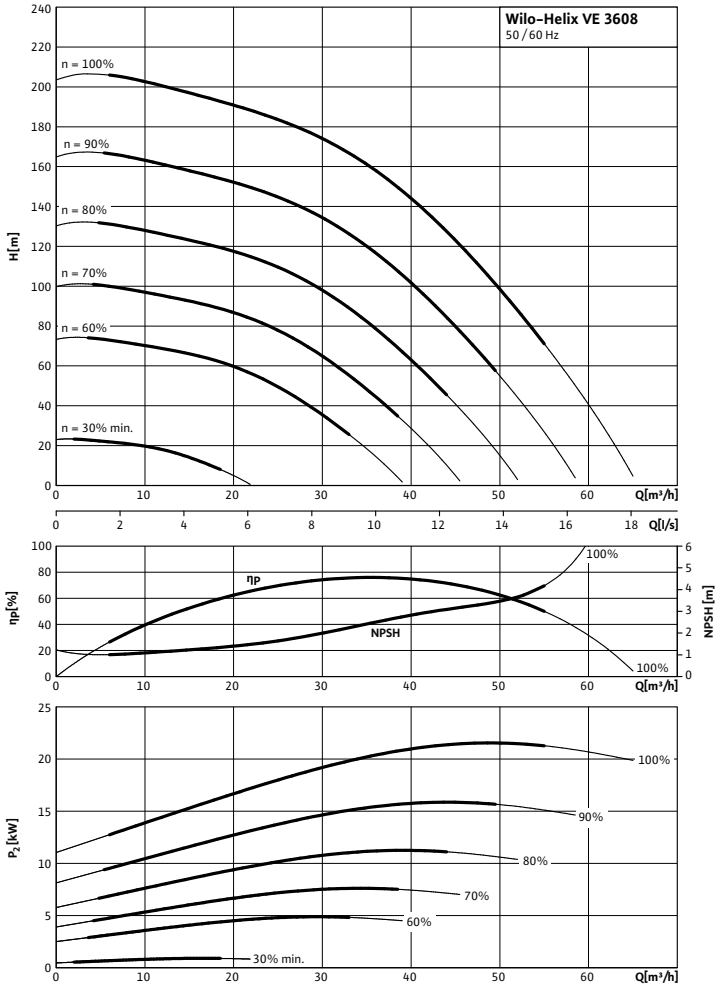

Pump curves in accordance with ISO 9906, class 2

Motor data					
Wilo-Helix...	**Nominal motor power**	**Nominal current 3~400 V, 50 Hz**	**Motor efficiency**		
	P_2	I_N	$\eta_{m\ 50\%}$	$\eta_{m\ 75\%}$	$\eta_{m\ 100\%}$
	kW	A	%		
Helix VE 3608	22.00	43.90	86.0	91.0	91.7

Motor efficiency based on 400 V, 50 Hz

Dimensions, weights Wilo-Helix VE

Dimension drawing

Helix VE 36

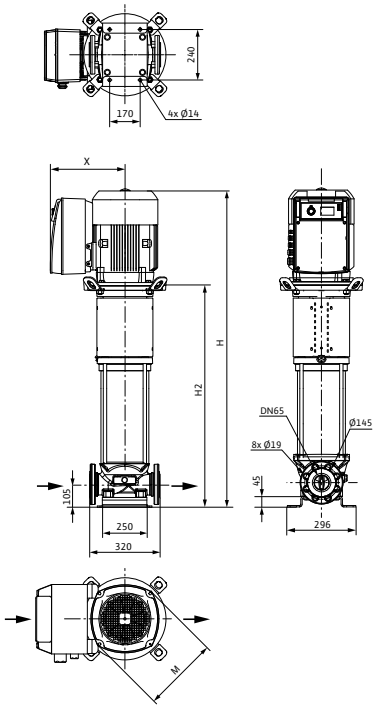

Dimensions, weights						
Wilo-Helix...	**Maximum operating pressure**	**Dimensions**				**Weight approx.**
	p_{max}	*H*	*H2*	*Ø M*	*X*	*m*
	bar	mm				kg
Helix VE 3608	25	1611	1145	302	398	240

Pump curves, motor data Wilo-Helix VE

Wilo-Helix VE 5201

Minimum Efficiency Index (MEI): ≥ 0.7

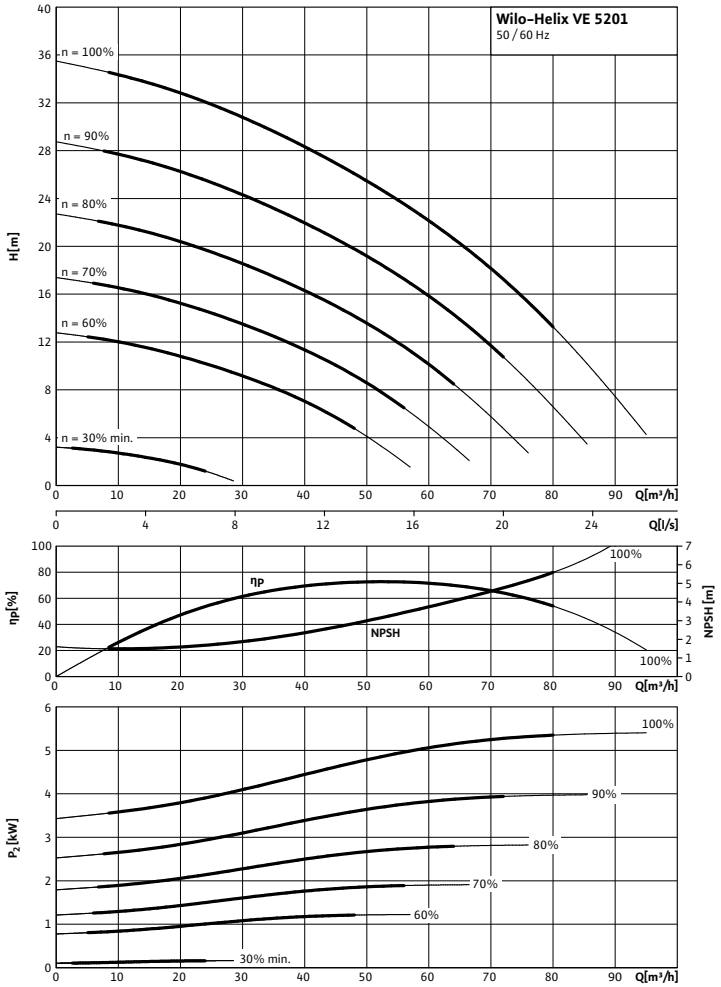

Pump curves in accordance with ISO 9906, class 2

Motor data					
Wilo-Helix...	**Nominal motor power**	**Nominal current 3~400 V, 50 Hz**	**Motor efficiency**		
	P_2	I_N	$\eta_{m\ 50\%}$	$\eta_{m\ 75\%}$	$\eta_{m\ 100\%}$
	kW	A	%		
Helix VE 5201	5.50	11.50	85.5	87.8	88.5

Motor efficiency based on 400 V, 50 Hz

Dimensions, weights Wilo-Helix VE

Dimension drawing

Helix VE 52

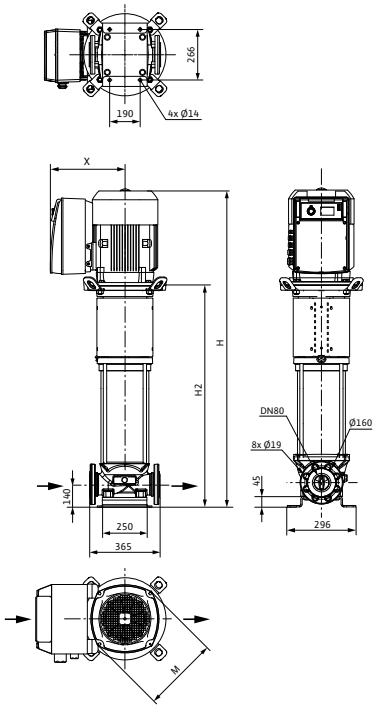

Dimensions, weights						
Wilo-Helix...	**Maximum operating pressure**	**Dimensions**				**Weight approx.**
	p_{max}	*H*	*H2*	*Ø M*	*X*	*m*
	bar	mm				kg
Helix VE 5201	16	1063	683	262	296	129

Pump curves, motor data Wilo-Helix VE

Wilo-Helix VE 5202

Minimum Efficiency Index (MEI): ≥ 0.7

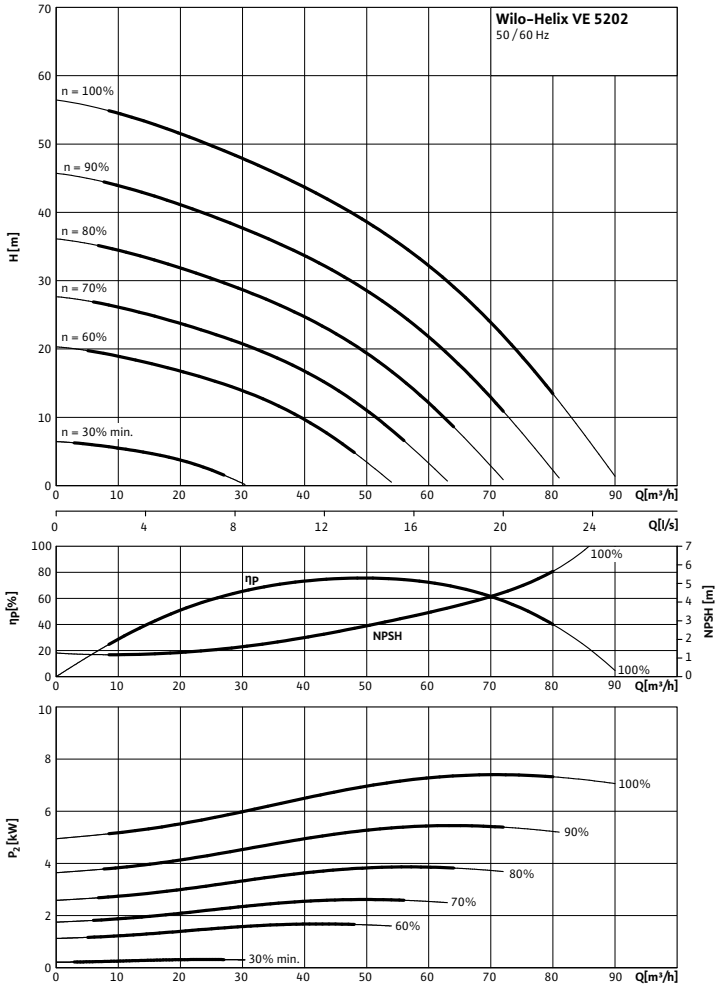

Pump curves in accordance with ISO 9906, class 2

Motor data					
Wilo-Helix...	**Nominal motor power**	**Nominal current 3~400 V, 50 Hz**	**Motor efficiency**		
	P_2	I_N	$\eta_{m\ 50\%}$	$\eta_{m\ 75\%}$	$\eta_{m\ 100\%}$
	kW	A	%		
Helix VE 5202	7.50	14.30	87.1	88.6	88.1

Motor efficiency based on 400 V, 50 Hz

Dimensions, weights Wilo-Helix VE

Dimension drawing

Helix VE 52

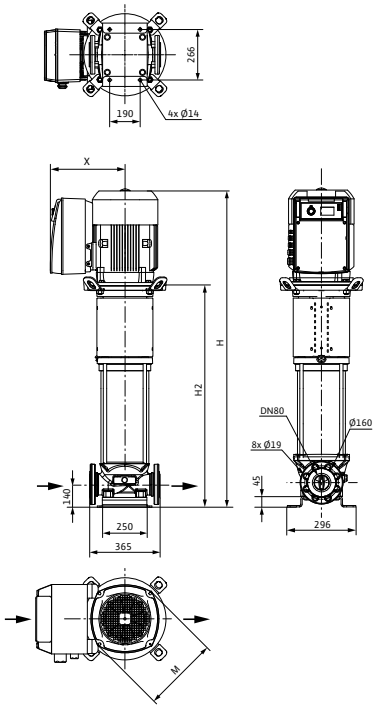

Dimensions, weights						
Wilo-Helix...	**Maximum operating pressure**	**Dimensions**				**Weight approx.**
	p_{max}	*H*	*H2*	*Ø M*	*X*	*m*
	bar	mm				kg
Helix VE 5202	16	1163	783	262	296	139

Pump curves, motor data Wilo-Helix VE

Wilo-Helix VE 5203

Minimum Efficiency Index (MEI): ≥ 0.7

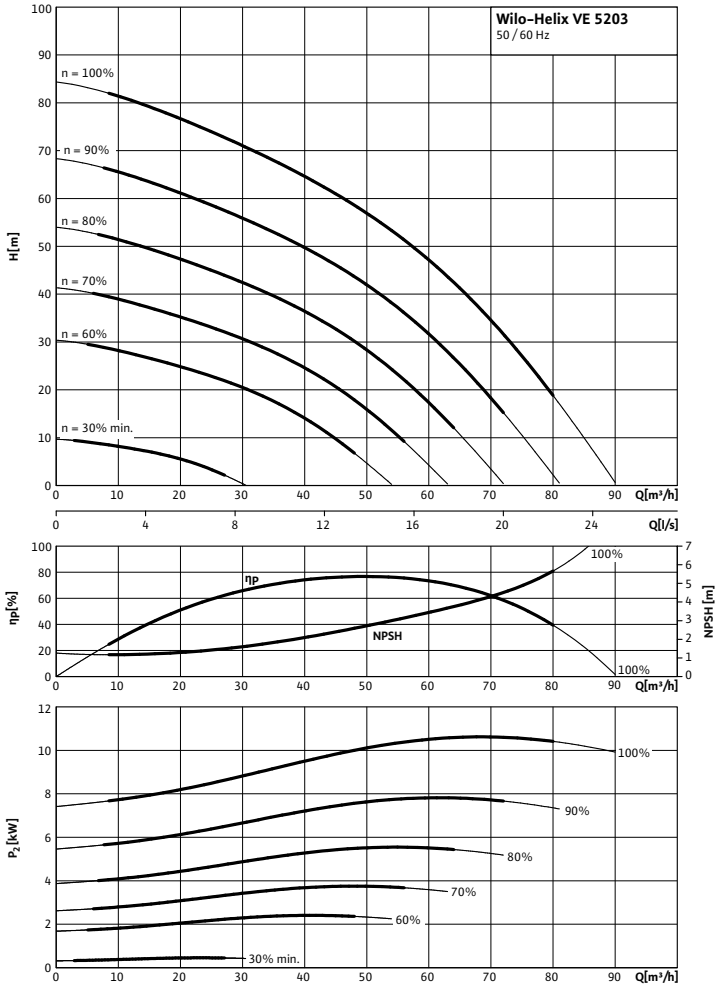

Pump curves in accordance with ISO 9906, class 2

Motor data					
Wilo-Helix...	**Nominal motor power**	**Nominal current 3~400 V, 50 Hz**	**Motor efficiency**		
	P_2	I_N	$\eta_{m\ 50\%}$	$\eta_{m\ 75\%}$	$\eta_{m\ 100\%}$
	kW	A	%		
Helix VE 5203	11.00	21.20	88.8	90.2	90.5

Motor efficiency based on 400 V, 50 Hz

Dimensions, weights Wilo-Helix VE

Dimension drawing

Helix VE 52

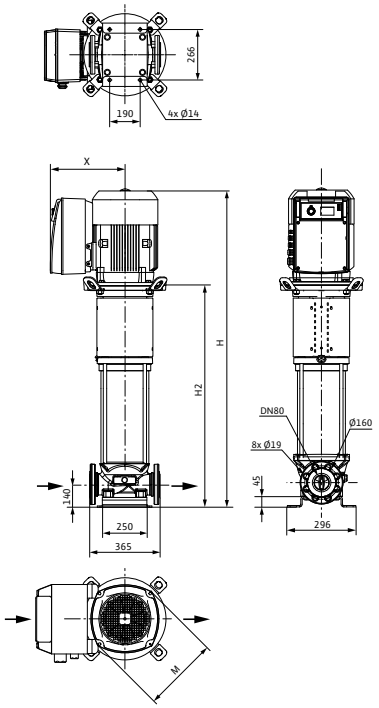

Dimensions, weights						
Wilo-Helix...	**Maximum operating pressure**	**Dimensions**				**Weight approx.**
	p_{max}	*H*	*H2*	*Ø M*	*X*	*m*
	bar	mm				kg
Helix VE 5203	16	1379	913	302	398	217
Helix VE 5203	25	1379	913			217

Pump curves, motor data Wilo-Helix VE

Wilo-Helix VE 5204

Minimum Efficiency Index (MEI): ≥ 0.7

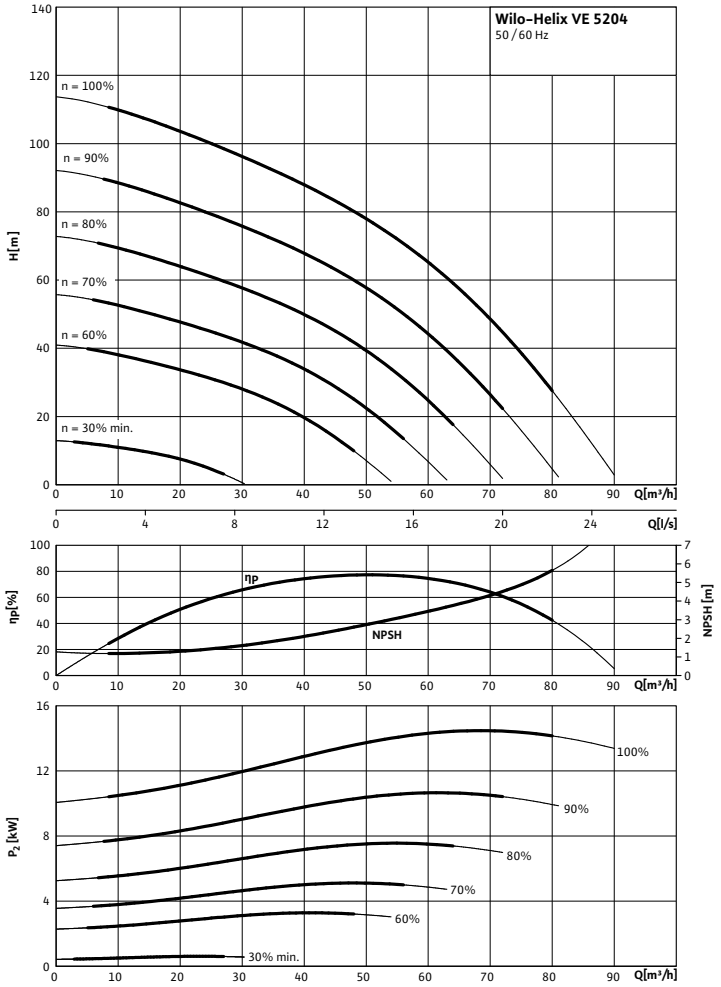

Pump curves in accordance with ISO 9906, class 2

Motor data					
Wilo-Helix...	**Nominal motor power**	**Nominal current 3~400 V, 50 Hz**	**Motor efficiency**		
	P_2	I_N	$\eta_{m\ 50\%}$	$\eta_{m\ 75\%}$	$\eta_{m\ 100\%}$
	kW	A	%		
Helix VE 5204	15.00	25.40	90.6	91.1	90.7

Motor efficiency based on 400 V, 50 Hz

Dimensions, weights Wilo-Helix VE

Dimension drawing

Helix VE 52

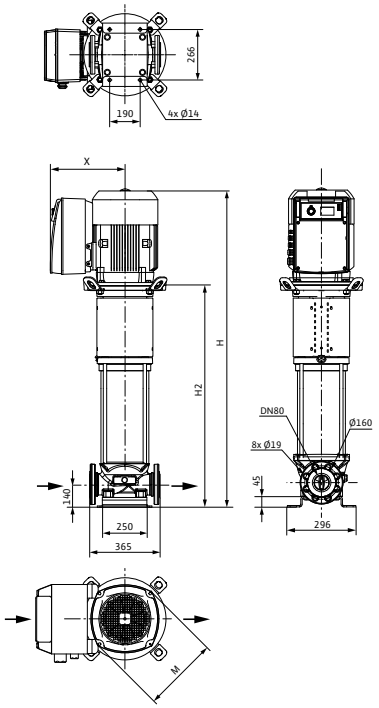

Dimensions, weights						
Wilo-Helix...	**Maximum operating pressure**	**Dimensions**				**Weight approx.**
	p_{max}	*H*	*H2*	*Ø M*	*X*	*m*
	bar	mm				kg
Helix VE 5204	16	1479	1013	302	398	227
Helix VE 5204	25	1474	1013			227

Pump curves, motor data Wilo-Helix VE

Wilo-Helix VE 5205

Minimum Efficiency Index (MEI): ≥ 0.7

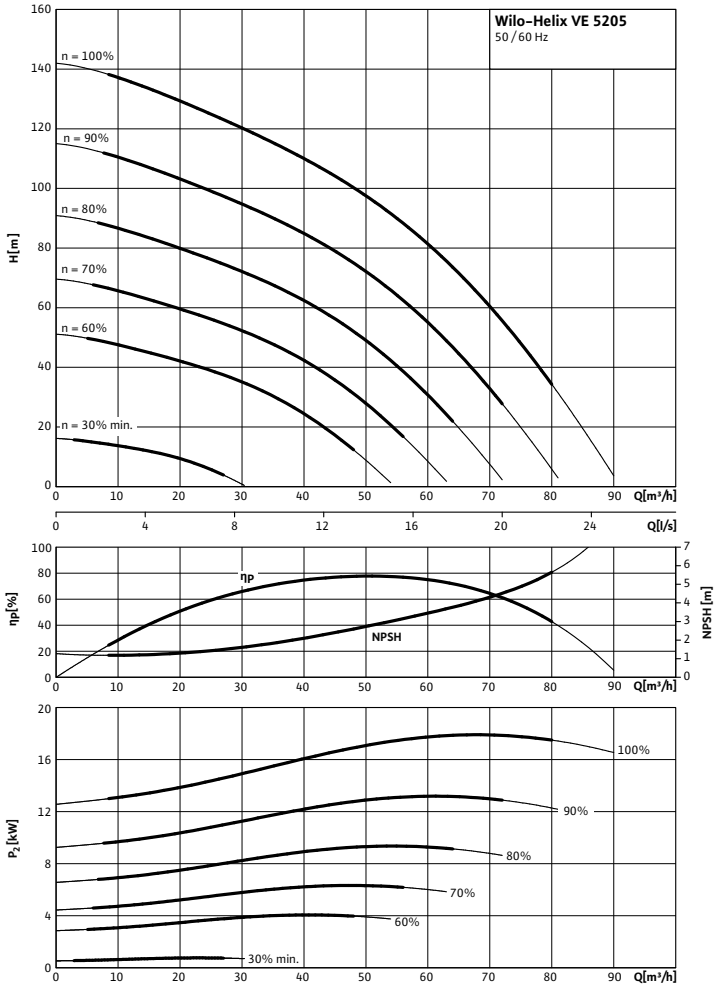

Pump curves in accordance with ISO 9906, class 2

Motor data					
Wilo-Helix...	**Nominal motor power**	**Nominal current 3~400 V, 50 Hz**	**Motor efficiency**		
	P_2	I_N	$\eta_{m\ 50\%}$	$\eta_{m\ 75\%}$	$\eta_{m\ 100\%}$
	kW	A	%		
Helix VE 5205	18.50	33.60	91.2	91.8	91.4

Motor efficiency based on 400 V, 50 Hz

Dimensions, weights Wilo-Helix VE

Dimension drawing

Helix VE 52

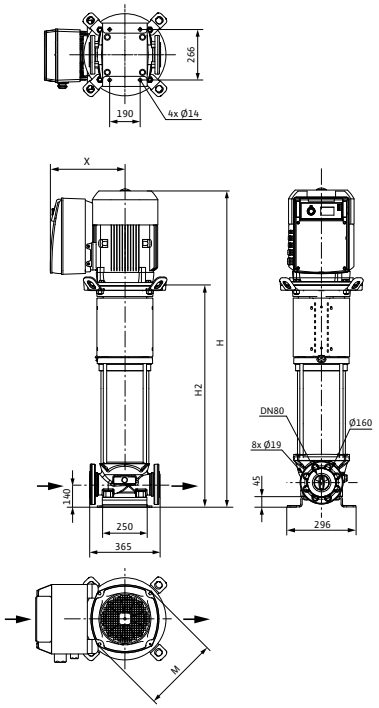

Dimensions, weights						
Wilo-Helix...	**Maximum operating pressure**	**Dimensions**				**Weight approx.**
	p_{max}	*H*	*H2*	*Ø M*	*X*	*m*
	bar	mm				kg
Helix VE 5205	16	1579	1113	302	398	242
Helix VE 5205	25	1579	1113			242

Pump curves, motor data Wilo-Helix VE

Wilo-Helix VE 5206

Minimum Efficiency Index (MEI): ≥ 0.7

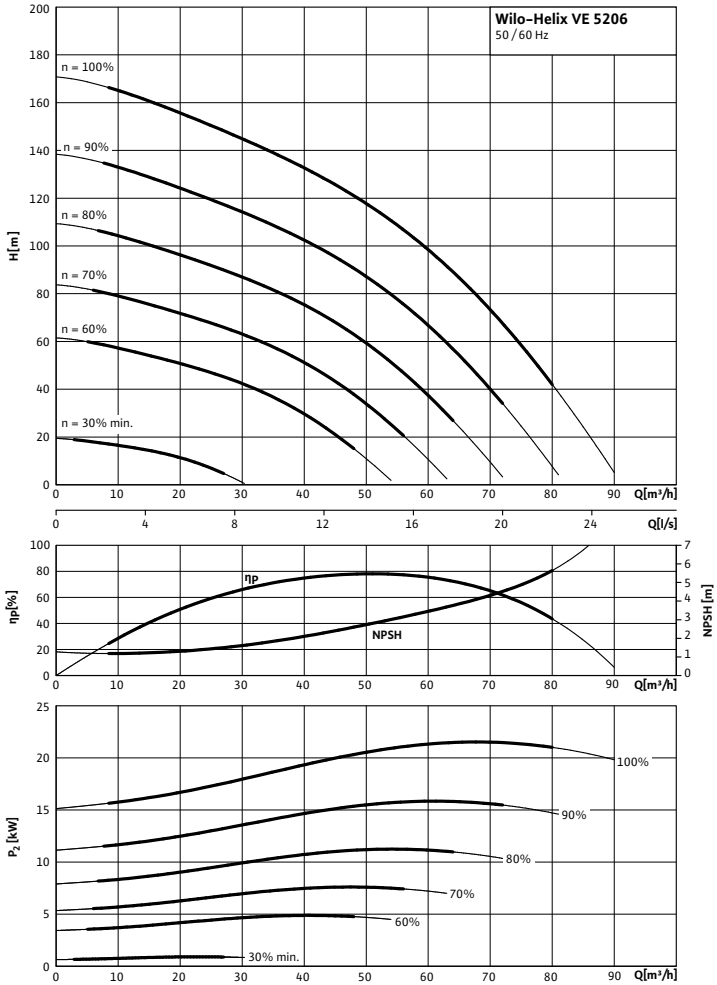

Pump curves in accordance with ISO 9906, class 2

Motor data					
Wilo-Helix...	**Nominal motor power**	**Nominal current 3~400 V, 50 Hz**	**Motor efficiency**		
	P_2	I_N	$\eta_{m\ 50\%}$	$\eta_{m\ 75\%}$	$\eta_{m\ 100\%}$
	kW	A	%		
Helix VE 5206	22.00	43.90	86.0	91.0	91.7

Motor efficiency based on 400 V, 50 Hz

Dimensions, weights Wilo-Helix VE

Dimension drawing

Helix VE 52

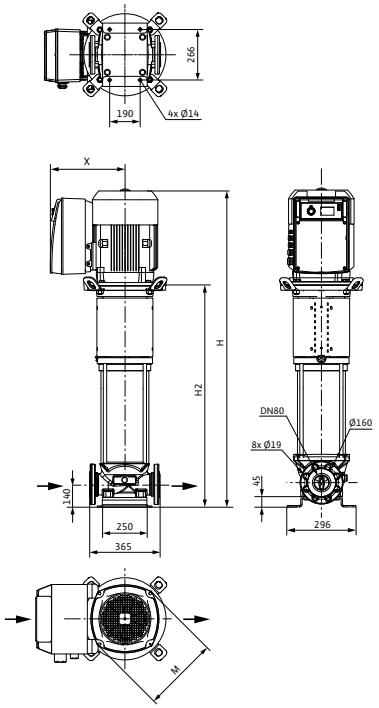

Dimensions, weights						
Wilo-Helix...	**Maximum operating pressure**	**Dimensions**				**Weight approx.**
	p_{max}	*H*	*H2*	*Ø M*	*X*	*m*
	bar	mm				kg
Helix VE 5206	25	1679	1213	302	398	246

Series description Wilo-Helix V

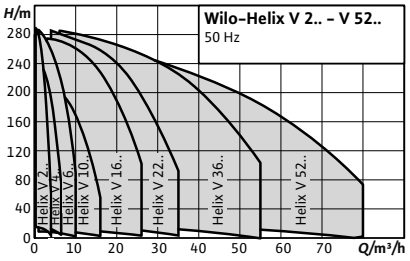

ErP READY — APPLIES TO EUROPEAN DIRECTIVE FOR ENERGY RELATED PRODUCTS

Design
Non-self-priming, high-efficiency multistage high-pressure centrifugal pump in vertical design with in-line connections

Application
- Water supply and pressure boosting
- Industrial circulation systems
- Process water
- Cooling water circulation systems
- Fire extinguishing systems
- Washing systems
- Irrigation

Versions with stainless steel 1.44xx for aggressive media

Type key

Example:	**Helix V 2202/2-3/16/E/X/K/../400-50**
Helix V	Vertical high-pressure multistage centrifugal pump in in-line design
22	Flow rate in m^3/h
02	Number of impellers
2	Number of trimmed impellers (optional)
3	Pump material
	1 = Pump housing 1.4301 (AISI 304) Hydraulics 1.4307 (AISI 304L); [Only Helix V 16.. and smaller]
	2 = Pump housing 1.4409 (AISI 316L) Hydraulics 1.4404 (AISI 316L)
	3 = Pump housing EN-GJL-250 (cataphoretic-coated) Hydraulics 1.4307 (AISI 304L); [Only Helix V 22.. and larger]
16	Maximum operating pressure in bar
	16 = 16 bar (PN 16 flange)
	25 = 25 bar (PN 25 flange)
	30 = 30 bar (PN 40 flange)
E	Gasket type E = EPDM V = FKM
X	"X-Care" special version
K	Mechanical seal in cartridge design
..	Optional
400	Connection voltage in V
50	Frequency in Hz

Special features/product advantages
- Efficiency-optimised, laser-welded, optimised 2D/3D hydraulics
- IE2 IEC standard motor, 3-phase, 2 pole (IE3 motor on request)
- Thanks to their modular pump housing (height and flanges can be adjusted), Helix pumps can be installed in existing piping.
- Helix V 22-52: Pressure sensor connections on the pump housing allow simple monitoring and control of the pump operation (optional for the standard version and included in versions for aggressive media)

Series description Wilo-Helix V

- The entire HELIX series is available with a user-friendly "X-Seal" cartridge mechanical seal (with standard gasket) which enables quick and easy maintenance.
- The spacer coupling (from ≥ 7.5 kW) allows the mechanical seal to be replaced without removing the motor.
- In its standard position, the terminal box is aligned with the suction flange, but this can be changed if necessary.
- Intermediate bearings (Al203/CW) ensure a long service life
- Corrosion-resistant shaft thanks to stainless steel sleeve
- WRAS/ACS approval for all parts that come in contact with the fluid

Equipment/function

- Corrosion-resistant impellers, diffusors and stage housings

Technical data

- Electrical connection: 3~400 V (±10 %), 50 Hz
- Fluid temperature range:
  - Helix V 2 – 16 (EPDM): -30 to 120 °C
  - Helix V 2 – 16 (FKM): -15 to 90 °C
  - Helix V22 – 52 (EPDM): -20 to 120 °C
  - Helix V22 – 52 for aggressive media (FKM): -15 to 90 °C (-30 °C with EPDM gasket on request)
- Max. operating pressure: 16/25/30 bar
- Protection class: IP 55
- Max. ambient temperature: +40°C (extended temperature ranges on request)
- Available versions:
  - Helix V 2 – 16: PN 16 with oval flanges, PN 25 with round flanges in accordance with ISO 2531 and ISO 7005
  - Helix V 22 – 52: PN 16 and PN 25 with round flanges in accordance with ISO 2531 and ISO 7005

Materials

Helix V 2, 4, 6, 10, 16:
Standard version
- Impellers, stage housings and diffusors made of stainless steel 1.4307
- Pump housing made of stainless steel 1.4301
- Baseplate and lantern EN-GJL-250 (cataphoretic coated)
- Shaft made of stainless steel 1.4301 or 1.4462 (depending on version)
- Sleeve under the mechanical seal 1.4404
- O-ring of EPDM (FKM gasket on request)
- Jacket pipe of stainless steel 1.4301

For aggressive media
- Impellers, stage housings and diffusors of stainless steel 1.4404
- Pump housing of stainless steel 1.4404
- Shaft of stainless steel 1.4404 or 1.4462 (depending on version)
- Sleeve under the mechanical seal 1.4404
- O-ring of EPDM (FKM gasket on request)
- Jacket pipe of stainless steel 1.4404

Helix V 22, 36, 52:
Standard version
- Stage housings, impellers, diffusors of stainless steel 1.4307
- Pump housing of cataphoretic-coated grey cast iron EN-GJL 250, loose flanges of EN-GJS 400 for Helix V 36-52.
- Shaft of stainless steel 1.4057
- Sleeve under the mechanical seal 1.4404
- O-ring of EPDM (FKM gasket on request)
- Jacket pipe of stainless steel 1.4301

For aggressive media
- Stage housings, impellers, diffusors of stainless steel 1.4404 with passivation for highest possible resistance to corrosion
- Pump housing: all parts which come in contact with the media are made of cast stainless steel 1.4409 ; loose flanges of cataphoretic-coated grey cast iron EN-GJL 250 for Helix V 22 / EN-GJS 400 for Helix V 36-52.
- Baseplate of stainless steel 1.4301
- Shaft of stainless steel 1.4404 or 1.4462 (depending on version)
- Sleeve under the mechanical seal 1.4404
- O-ring of FKM (EPDM gasket on request)
- Pressure shroud of stainless steel 1.4404

Scope of delivery

- Helix V high-pressure multistage centrifugal pump
- Helix V 2 – 16: Oval counter flanges with corresponding screws and O-rings (PN16 variant) or bolts and gaskets if a counter flange is used (PN25 variant with round flanges)
- Helix V 22 – 52: Bolts and gaskets if a counter flange is used (PN16 and PN25 with round flanges)
- Installation and operating instructions
- Integrated funnel to make it easier to fill the pump (Helix V 2 – 16 only)

General notes - ErP (ecological design-) directive

- The benchmark for most efficient water pumps is MEI ≥ 0.70
- The efficiency of a pump with a trimmed impeller is usually lower than that of a pump with the full impeller diameter. The trimming of the impeller will adapt the pump to a fixed duty point, leading to reduced energy consumption. The minimum efficiency index (MEI) is based on the full impeller diameter.
- The operation of this water pump with variable duty points may be more efficient and economic when controlled, for example, by the use of a variable speed drive that matches the pump duty to the system.
- Information on benchmark efficiency is available at **www.europump.org/efficiencycharts**

Series description Wilo-Helix V

Electrical connection

Three-phase current ≤ 4 kW

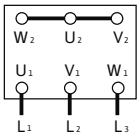

3~400 V ⅄

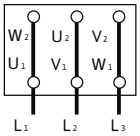

3~230 V Δ

Electrical connection

Three-phase current ≥ 5.5 kW; Y-Δ-direct starting

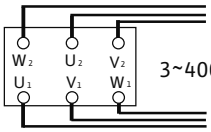

3~400 V

Pump curves, motor data Wilo-Helix V 2

Wilo-Helix V 202 - 239

Minimum Efficiency Index (MEI): ≥ 0.7

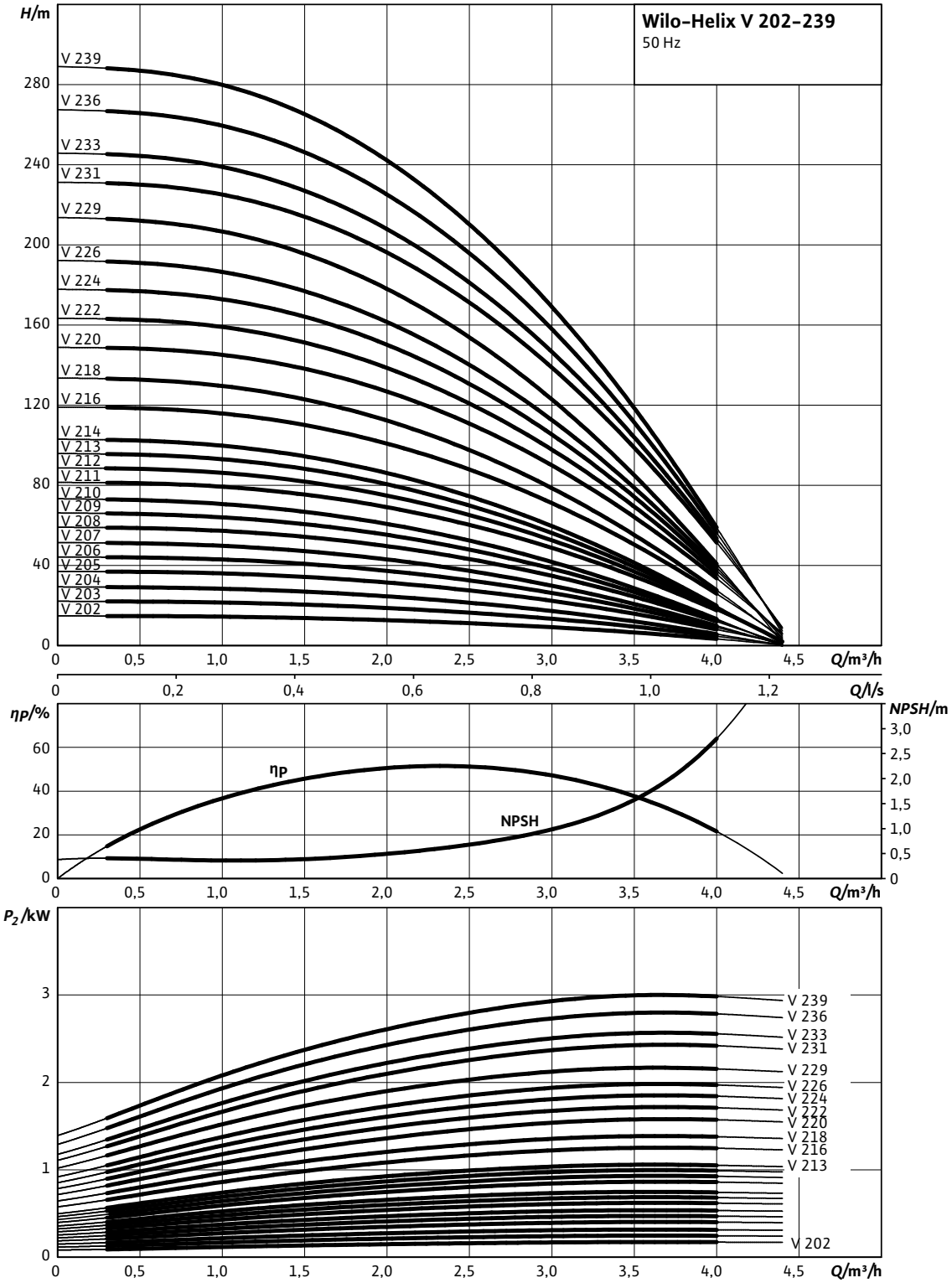

Pump curves in accordance with ISO 9906, class 2

Pump curves, motor data Wilo-Helix V 2

Motor data						
Wilo-Helix...	**Nominal motor power**	**Nominal current 3~230 V, 50 Hz**	**Nominal current 3~400 V, 50 Hz**	**Motor efficiency**		
	P_2	I_N		$\eta_{m\ 50\%}$	$\eta_{m\ 75\%}$	$\eta_{m\ 100\%}$
	kW	A		%		
Helix V 202	0.37	1.69	0.97	71.0	72.8	72.8
Helix V 203	0.37	1.69	0.97	71.0	72.8	72.8
Helix V 204	0.37	1.69	0.97	71.0	72.8	72.8
Helix V 205	0.55	2.27	1.31	73.0	75.0	75.5
Helix V 206	0.55	2.27	1.31	73.0	75.0	75.5
Helix V 207	0.55	2.27	1.31	73.0	75.0	75.5
Helix V 208	0.75	3.06	1.77	76.0	77.4	77.4
Helix V 209	0.75	3.06	1.77	76.0	77.4	77.4
Helix V 210	0.75	3.06	1.77	76.0	77.4	77.4
Helix V 211	1.10	4.40	2.60	78.0	79.6	79.6
Helix V 212	1.10	4.40	2.60	78.0	79.6	79.6
Helix V 213	1.10	4.40	2.60	78.0	79.6	79.6
Helix V 214	1.10	4.40	2.60	78.0	79.6	79.6
Helix V 216	1.50	5.70	3.30	80.0	81.3	81.3
Helix V 218	1.50	5.70	3.30	80.0	81.3	81.3
Helix V 220	2.20	8.00	4.60	82.0	83.2	83.2
Helix V 222	2.20	8.00	4.60	82.0	83.2	83.2
Helix V 224	2.20	8.00	4.60	82.0	83.2	83.2
Helix V 226	2.20	8.00	4.60	82.0	83.2	83.2
Helix V 229	2.20	8.00	4.60	82.0	83.2	83.2
Helix V 231	3.00	11.60	6.70	82.5	85.0	84.6
Helix V 233	3.00	11.60	6.70	82.5	85.0	84.6
Helix V 236	3.00	11.60	6.70	82.5	85.0	84.6
Helix V 239	3.00	11.60	6.70	82.5	85.0	84.6

Motor efficiency based on 400 V, 50 Hz

Dimensions, weights Wilo-Helix V 2

Dimension drawing

Helix V 2/V4, PN 16

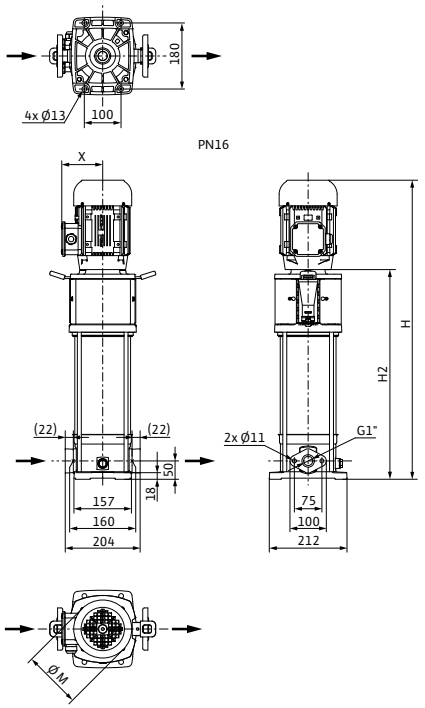

Dimension drawing

Helix V 2/V 4, PN 25

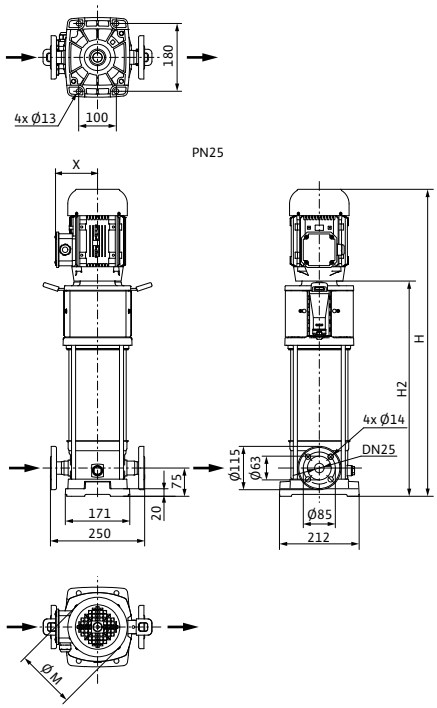

Dimension drawing

Helix V 2-4, P_{max}: 30 bar

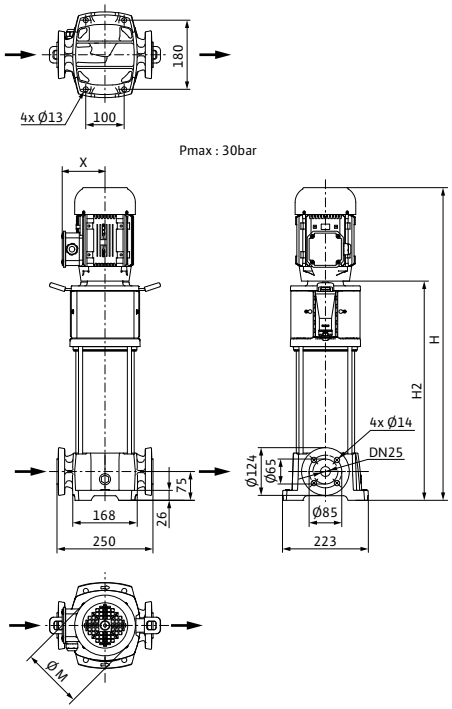

Dimensions, weights Wilo-Helix V 2

Dimensions, weights – Version PN 16

Wilo-Helix...	Maximum operating pressure	Dimensions				Weight approx.
	p_{max}	*H*	*H2*	*Ø M*	*X*	*m*
	bar	mm				kg
Helix V 202	16	595	371	130	121	23
Helix V 202	25	620	396			24
Helix V 203	16	620	396			23
Helix V 203	25	641	421			24
Helix V 204	16	645	421			24
Helix V 204	25	666	446			25
Helix V 205	16	670	446			26
Helix V 205	25	691	471			27
Helix V 206	16	695	471			26
Helix V 206	25	716	496			27
Helix V 207	16	720	496			27
Helix V 207	25	741	521			28
Helix V 208	16	765	521	146	127	29
Helix V 208	25	786	546			31
Helix V 209	16	790	546			29
Helix V 209	25	815	571			31
Helix V 210	16	815	571			30
Helix V 210	25	840	596			32
Helix V 211	16	840	596			32
Helix V 211	25	865	621			34
Helix V 212	16	865	621			32
Helix V 212	25	890	646			34
Helix V 213	16	915	671			33
Helix V 213	25	940	696			35
Helix V 214	16	915	671			33
Helix V 214	25	940	696			36
Helix V 216	16	1010	731	184	149	39
Helix V 216	25	1035	756			41
Helix V 218	16	1060	781			40
Helix V 218	25	1085	806			42
Helix V 220	16	1110	831			43
Helix V 220	25	1135	856			45
Helix V 222	25	1235	956			47
Helix V 224	25	1235	956			48
Helix V 226	25	1310	1031			49
Helix V 229	25	1385	1106			51
Helix V 229	30	1362	1083	194	170	62
Helix V 231	25	1458	1141			59
Helix V 231	30	1435	1118			63
Helix V 233	25	1508	1191			60
Helix V 233	30	1485	1168			64
Helix V 236	30	1560	1243			66
Helix V 239	30	1635	1318			67

Pump curves Wilo-Helix V 4

Wilo-Helix V 402 - 431

Minimum Efficiency Index (MEI): ≥ 0.7

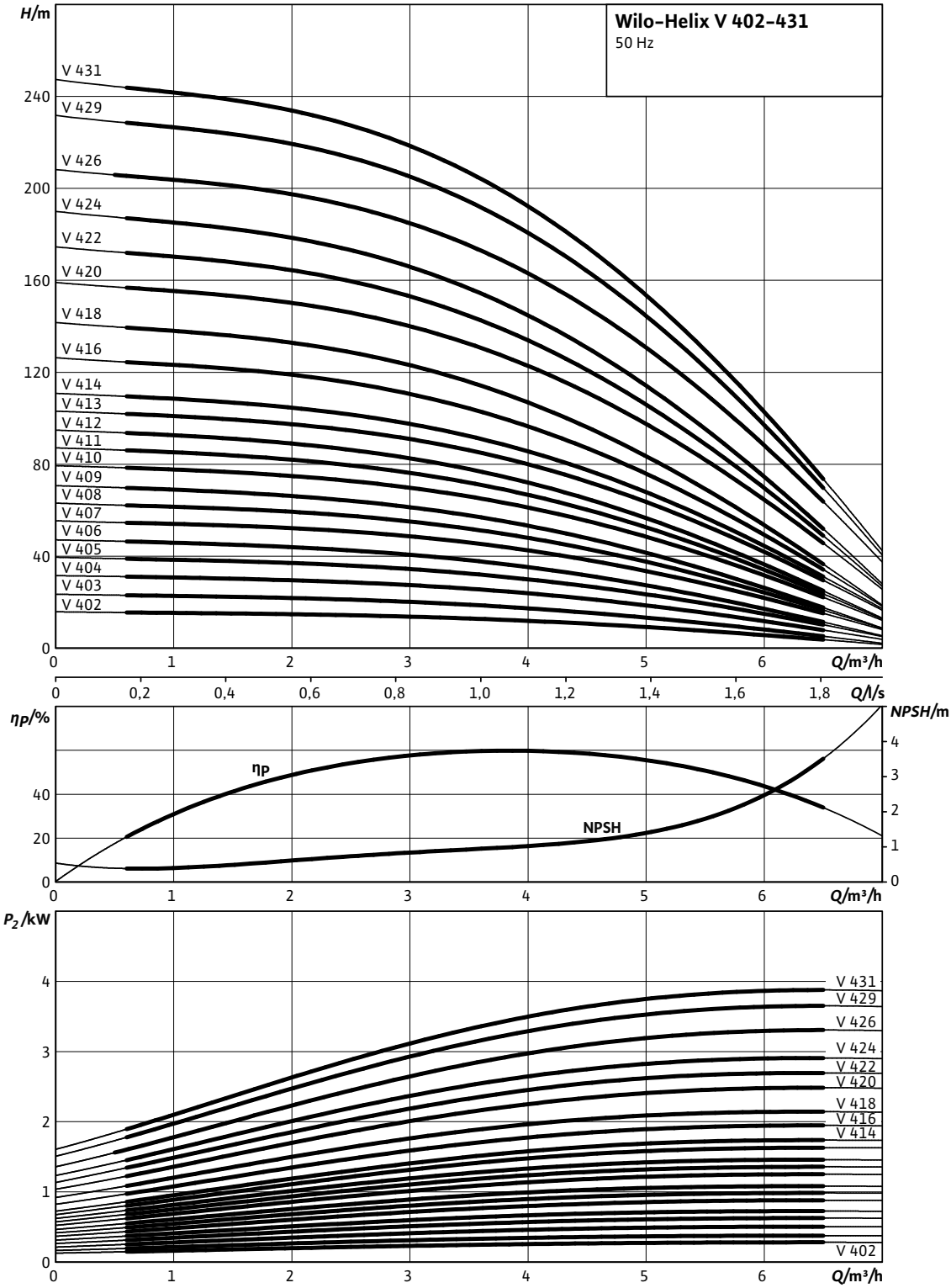

Pump curves in accordance with ISO 9906, class 2

Motor data Wilo-Helix V 4

Motor data						
Wilo-Helix...	**Nominal motor power**	**Nominal current 3~230 V, 50 Hz**	**Nominal current 3~400 V, 50 Hz**	**Motor efficiency**		
	P_2	I_N		$\eta_{m\ 50\%}$	$\eta_{m\ 75\%}$	$\eta_{m\ 100\%}$
	kW	A		%		
Helix V 402	0.37	1.69	0.97	75.0	77.0	77.4
Helix V 403	0.37	1.69	0.97	75.0	77.0	77.4
Helix V 404	0.55	2.27	1.31	74.0	77.4	77.4
Helix V 405	0.75	3.06	1.77	76.0	77.4	77.4
Helix V 406	0.75	3.06	1.77	76.0	77.4	77.4
Helix V 407	1.10	4.40	2.60	78.0	79.6	79.6
Helix V 408	1.10	4.40	2.60	78.0	79.6	79.6
Helix V 409	1.10	4.40	2.60	78.0	79.6	79.6
Helix V 410	1.50	5.70	3.30	80.0	81.3	81.3
Helix V 411	1.50	5.70	3.30	80.0	81.3	81.3
Helix V 412	1.50	5.70	3.30	80.0	81.3	81.3
Helix V 413	2.20	8.00	4.60	82.0	83.2	83.2
Helix V 414	2.20	8.00	4.60	82.0	83.2	83.2
Helix V 416	2.20	8.00	4.60	82.0	83.2	83.2
Helix V 418	2.20	8.00	4.60	82.0	83.2	83.2
Helix V 420	3.00	11.60	6.70	82.5	85.0	84.6
Helix V 422	3.00	11.60	6.70	82.5	85.0	84.6
Helix V 424	3.00	11.60	6.70	82.5	85.0	84.6
Helix V 426	4.00	13.50	7.80	83.0	85.3	85.7
Helix V 429	4.00	13.50	7.80	83.0	85.3	85.7
Helix V 431	4.00	13.50	7.80	83.0	85.3	85.7

Motor efficiency based on 400 V, 50 Hz

Dimensions, weights Wilo-Helix V 4

Dimension drawing

Helix V 2/V4, PN 16

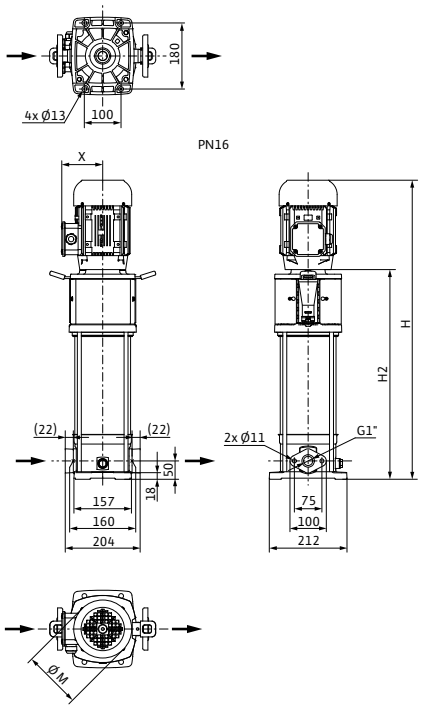

Dimension drawing

Helix V 2/V 4, PN 25

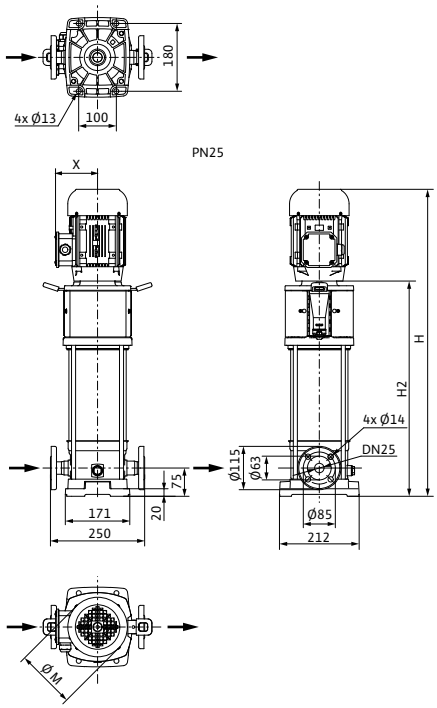

Dimension drawing

Helix V 2-4, P_{max}: 30 bar

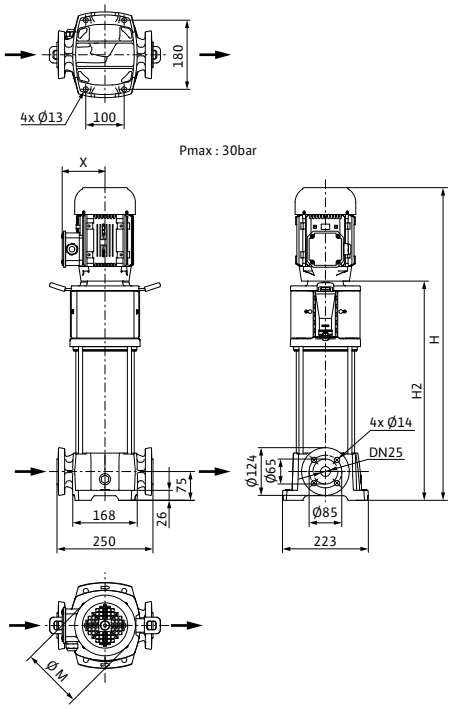

Dimensions, weights Wilo-Helix V 4

Dimensions, weights – Version PN 16						
Wilo-Helix...	**Maximum operating pressure**	**Dimensions**				**Weight approx.**
	p_{max}	*H*	*H2*	*Ø M*	*X*	*m*
	bar	mm				kg
Helix V 402	16	595	371	130	121	22
Helix V 402	25	620	396			23
Helix V 403	16	620	396			23
Helix V 403	25	645	421			24
Helix V 404	16	645	421			24
Helix V 404	25	670	446			25
Helix V 405	16	690	446	146	127	26
Helix V 405	25	715	471			27
Helix V 406	16	715	471			27
Helix V 406	25	740	496			28
Helix V 407	16	740	496			29
Helix V 407	25	765	521			30
Helix V 408	16	765	521			29
Helix V 408	25	790	546			32
Helix V 409	16	790	546			30
Helix V 409	25	815	571			32
Helix V 410	16	847	581	193	149	35
Helix V 410	25	872	606			37
Helix V 411	16	872	606			35
Helix V 411	25	897	631			37
Helix V 412	16	897	631			36
Helix V 412	25	922	656			38
Helix V 413	16	947	681			40
Helix V 413	25	972	706			42
Helix V 414	16	947	681			40
Helix V 414	25	972	706			42
Helix V 416	16	997	731			41
Helix V 416	25	1022	756			43
Helix V 418	16	1047	781			42
Helix V 418	25	1072	806			44
Helix V 420	16	1133	841	194	170	45
Helix V 420	25	1158	866			47
Helix V 422	25	1258	966			49
Helix V 424	25	1258	966			49
Helix V 426	25	1376	1041	218	175	61
Helix V 429	25	1451	1116			62
Helix V 429	30	1429	1093			69
Helix V 431	25	1476	1141			63
Helix V 431	30	1454	1118			69

Pump curves, motor data Wilo-Helix V 6

Wilo-Helix V 601 – 633

Minimum Efficiency Index (MEI): ≥ 0.7

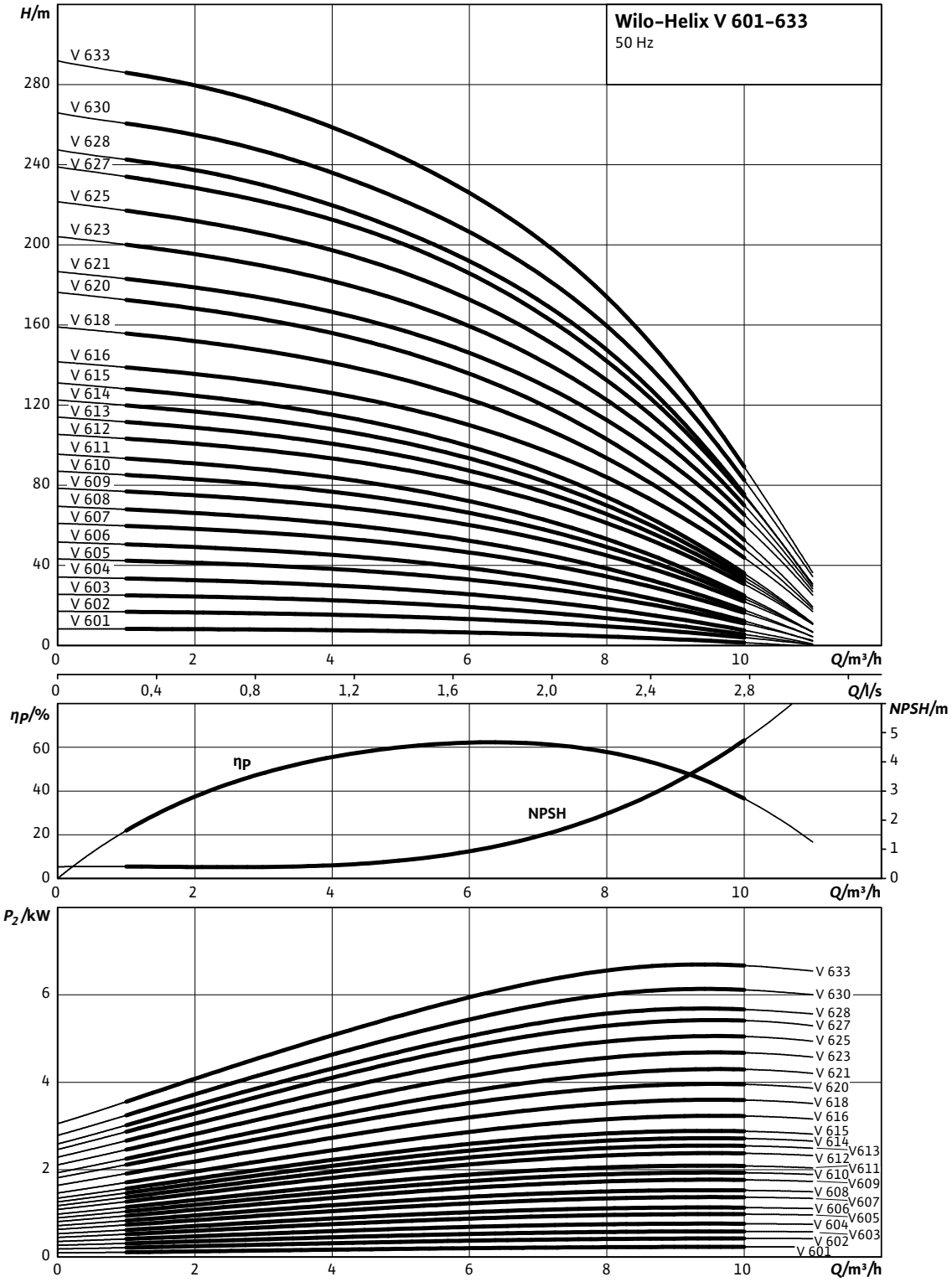

Pump curves in accordance with ISO 9906, class 2

Pump curves, motor data Wilo-Helix V 6

Motor data						
Wilo-Helix...	**Nominal motor power**	**Nominal current 3~230 V, 50 Hz**	**Nominal current 3~400 V, 50 Hz**	**Motor efficiency**		
	P_2	I_N		$\eta_{m\ 50\%}$	$\eta_{m\ 75\%}$	$\eta_{m\ 100\%}$
	kW	A		%		
Helix V 601	0.37	1.69	0.97	71.0	72.8	72.8
Helix V 602	0.55	2.27	1.31	73.0	75.0	75.5
Helix V 603	0.55	2.27	1.31	73.0	75.0	75.5
Helix V 604	0.75	3.06	1.77	76.0	77.4	77.4
Helix V 605	1.10	4.40	2.60	78.0	79.6	79.6
Helix V 606	1.10	4.40	2.60	78.0	79.6	79.6
Helix V 607	1.50	5.70	3.30	80.0	81.3	81.3
Helix V 608	1.50	5.70	3.30	80.0	81.3	81.3
Helix V 609	2.20	8.00	4.60	82.0	83.2	83.2
Helix V 610	2.20	8.00	4.60	82.0	83.2	83.2
Helix V 611	2.20	8.00	4.60	82.0	83.2	83.2
Helix V 612	3.00	11.60	6.70	82.5	85.0	84.6
Helix V 613	3.00	11.60	6.70	82.5	85.0	84.6
Helix V 614	3.00	11.60	6.70	82.5	85.0	84.6
Helix V 615	3.00	11.60	6.70	82.5	85.0	84.6
Helix V 616	4.00	13.50	7.80	85.0	85.8	85.8
Helix V 618	4.00	13.50	7.80	85.0	85.8	85.8
Helix V 620	4.00	13.50	7.80	85.0	85.8	85.8
Helix V 621	5.50	–	10.70	85.2	86.9	88.1
Helix V 623	5.50	–	10.70	85.2	86.9	88.1
Helix V 625	5.50	–	10.70	85.2	86.9	88.1
Helix V 627	5.50	–	10.70	85.2	86.9	88.1
Helix V 628	5.50	–	10.70	85.2	86.9	88.1
Helix V 630	7.50	–	14.00	88.5	89.9	89.5
Helix V 633	7.50	–	14.00	88.5	89.9	89.5

Motor efficiency based on 400 V, 50 Hz

Dimensions, weights Wilo-Helix V 6

Dimension drawing

Helix V 6, PN 16

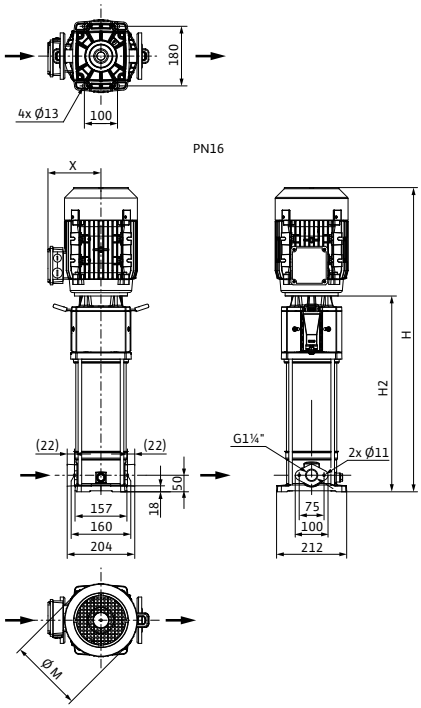

Dimension drawing

Helix V 6, PN 25

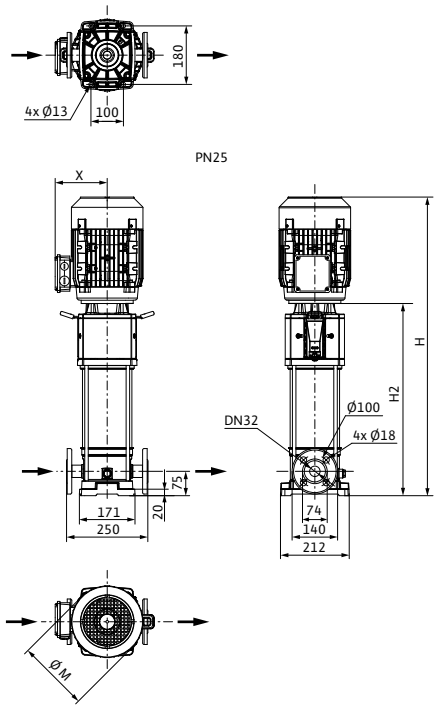

Dimension drawing

Helix V 6, P_{max}: 30 bar

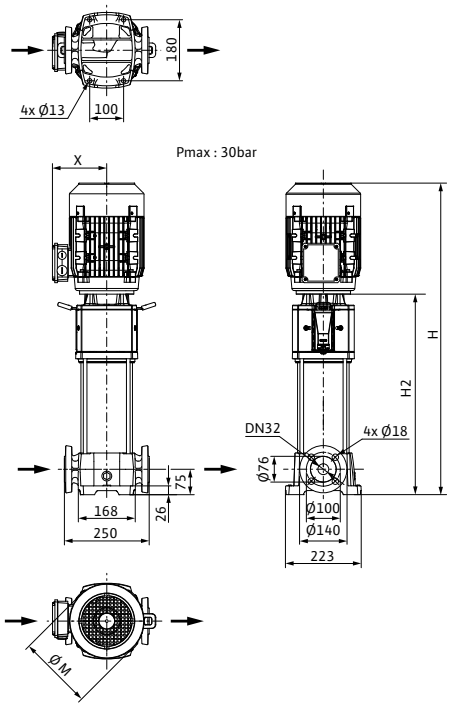

Dimensions, weights Wilo-Helix V 6

Dimensions, weights						
Wilo-Helix...	**Maximum operating pressure**	**Dimensions**				**Weight approx.**
	p_{max}	*H*	*H2*	*Ø M*	*X*	*m*
	bar	mm				kg
Helix V 601	16	620	396	130	121	23
Helix V 601	25	645	421			24
Helix V 602	16	620	396			24
Helix V 602	25	645	421			25
Helix V 603	16	658	434			25
Helix V 603	25	683	459			26
Helix V 604	16	715	471	146	127	28
Helix V 604	25	740	496			29
Helix V 605	16	753	509			30
Helix V 605	25	778	534			31
Helix V 606	16	790	546			31
Helix V 606	25	815	571			32
Helix V 607	16	873	594	184	149	36
Helix V 607	25	898	619			38
Helix V 608	16	910	631			37
Helix V 608	25	935	656			39
Helix V 609	16	948	669			40
Helix V 609	25	973	694			42
Helix V 610	16	985	706			41
Helix V 610	25	1010	731			43
Helix V 611	16	1060	781			42
Helix V 611	25	1085	806			44
Helix V 612	16	1108	791	194	170	51
Helix V 612	25	1133	816			53
Helix V 613	16	1183	866			52
Helix V 613	25	1208	891			54
Helix V 614	16	1183	866			52
Helix V 614	25	1208	891			54
Helix V 615	16	1258	941			54
Helix V 615	25	1283	966			56
Helix V 616	16	1290	941	218	175	60
Helix V 616	25	1315	966			62
Helix V 618	25	1390	1041			64
Helix V 620	25	1465	1116			65
Helix V 621	25	1519	1191	232	160	73
Helix V 623	25	1594	1266			74
Helix V 623	30	1571	1243			78
Helix V 625	25	1669	1341			75
Helix V 625	30	1646	1318			79
Helix V 627	25	1744	1416			78
Helix V 628	30	1721	1393			82
Helix V 630	30	1983	1588	220		103
Helix V 633	30	2095	1700			106

Pump curves Wilo-Helix V 10

Wilo-Helix V 1001 – 1023

Minimum Efficiency Index (MEI): ≥ 0.7

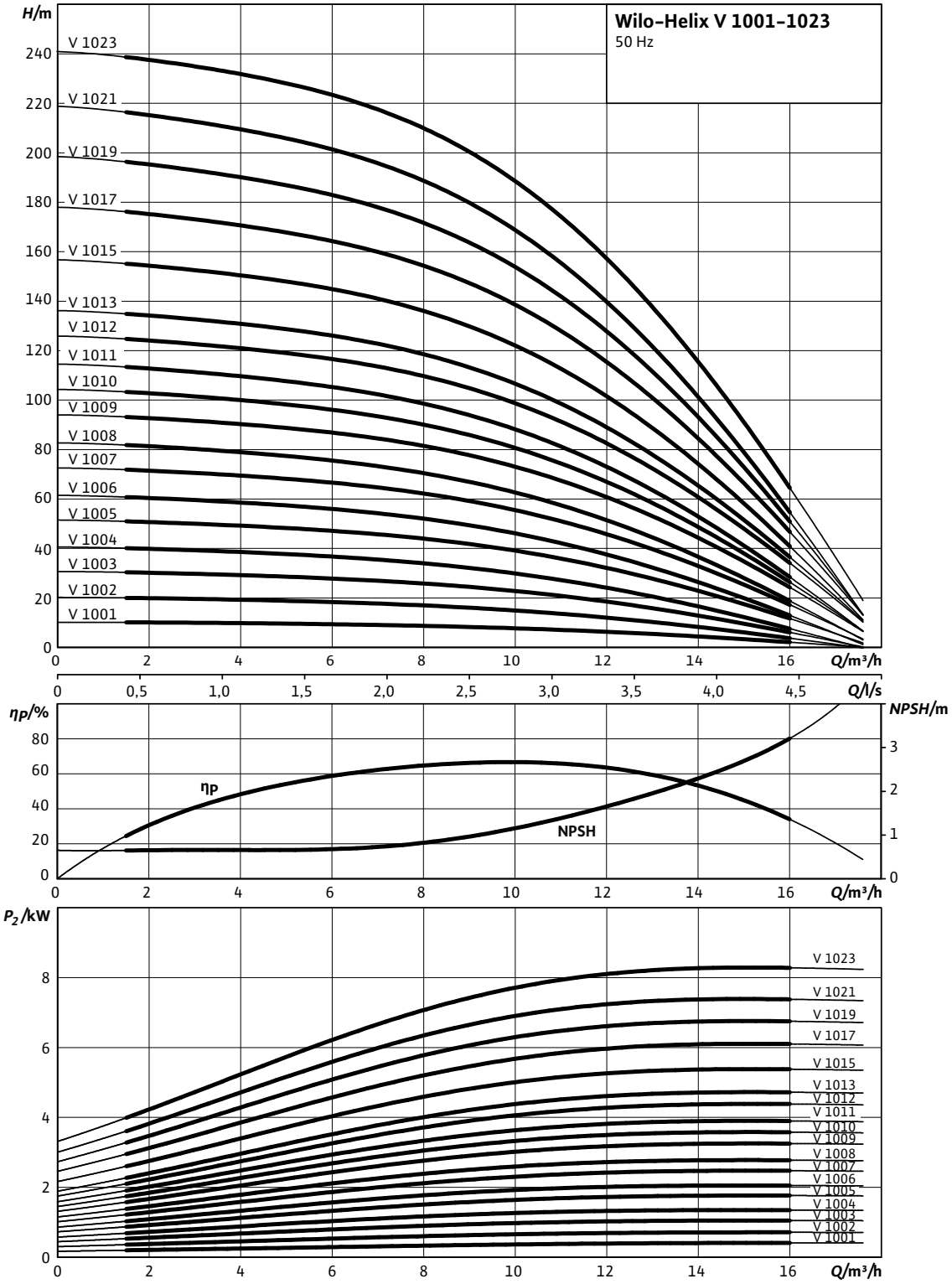

Pump curves in accordance with ISO 9906, class 2

Motor data Wilo-Helix V 10

Motor data						
Wilo-Helix...	**Nominal motor power**	**Nominal current 3~230 V, 50 Hz**	**Nominal current 3~400 V, 50 Hz**	**Motor efficiency**		
	P_2	I_N		$\eta_{m\ 50\%}$	$\eta_{m\ 75\%}$	$\eta_{m\ 100\%}$
	kW	A		%		
Helix V 1001	0.55	2.27	1.31	73.0	75.0	75.5
Helix V 1002	0.75	3.06	1.77	76.0	77.4	77.4
Helix V 1003	1.10	4.40	2.60	78.0	79.6	79.6
Helix V 1004	1.50	5.70	3.30	80.0	81.3	81.3
Helix V 1005	2.20	8.00	4.60	82.0	83.2	83.2
Helix V 1006	2.20	8.00	4.60	82.0	83.2	83.2
Helix V 1007	3.00	11.60	6.70	82.5	85.0	84.6
Helix V 1008	3.00	11.60	6.70	82.5	85.0	84.6
Helix V 1009	4.00	13.50	7.80	85.0	85.8	85.8
Helix V 1010	4.00	13.50	7.80	85.0	85.8	85.8
Helix V 1011	4.00	13.50	7.80	85.0	85.8	85.8
Helix V 1012	5.50	–	10.70	85.2	86.9	88.1
Helix V 1013	5.50	–	10.70	85.2	86.9	88.1
Helix V 1015	5.50	–	10.70	85.2	86.9	88.1
Helix V 1017	7.50	–	14.00	88.5	89.9	89.5
Helix V 1019	7.50	–	14.00	88.5	89.9	89.5
Helix V 1021	7.50	–	14.00	88.5	89.9	89.5
Helix V 1023	9.00	–	16.30	86.6	88.4	88.8

Motor efficiency based on 400 V, 50 Hz

Dimensions, weights Wilo-Helix V 10

Dimension drawing

Helix V 10, PN 16

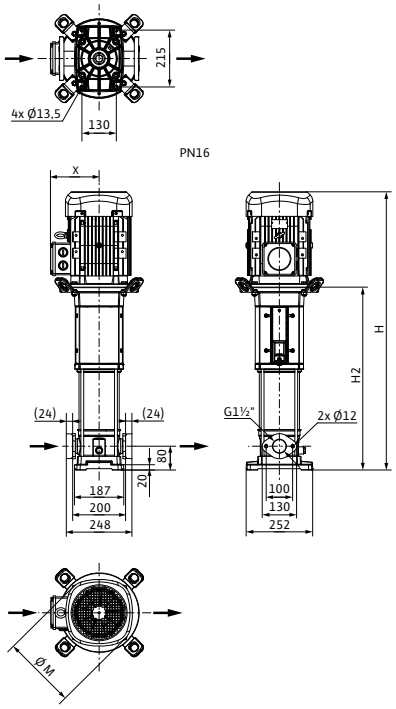

Dimension drawing

Helix V 10, PN 25

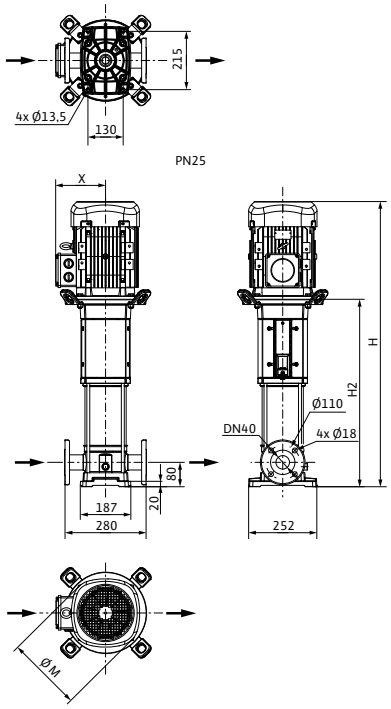

Dimension drawing

Helix V 10, P_{max}: 30 bar

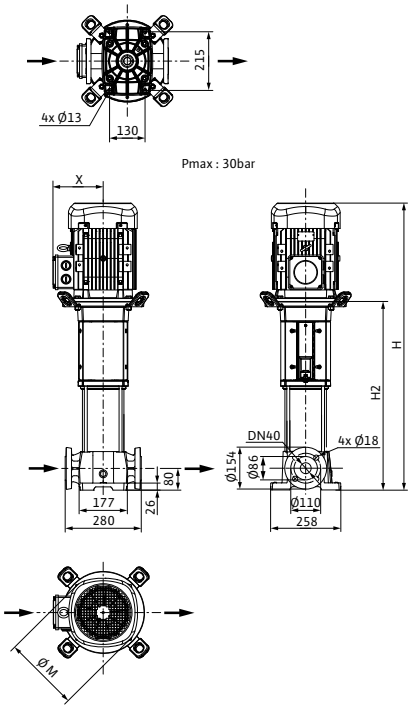

Dimensions, weights Wilo-Helix V 10

Dimensions, weights						
Wilo-Helix...	**Maximum operating pressure**	**Dimensions**				**Weight approx.**
	p_{max}	*H*	*H2*	*Ø M*	*X*	*m*
	bar	mm				kg
Helix V 1001	16	641	417	130	121	27
Helix V 1001	25	641	417			27
Helix V 1002	16	661	417	146	127	29
Helix V 1002	25	661	417			29
Helix V 1003	16	698.5	454.5			31
Helix V 1003	25	698.5	454.5			31
Helix V 1004	16	768.5	502	193	149	37
Helix V 1004	25	768.5	502			37
Helix V 1005	16	806	539.5			40
Helix V 1005	25	806	539.5			40
Helix V 1006	16	843.5	577			41
Helix V 1006	25	843.5	577			41
Helix V 1007	16	942	624.5	194	170	45
Helix V 1007	25	942	624.5			45
Helix V 1008	16	979	662			46
Helix V 1008	25	979	662			46
Helix V 1009	16	1049	699.5	218	175	58
Helix V 1009	25	1049	699.5			58
Helix V 1010	16	1086	737			59
Helix V 1010	25	1086	737			59
Helix V 1011	16	1161	812			60
Helix V 1011	25	1161	812			60
Helix V 1012	16	1139.5	812	220	160	67
Helix V 1012	25	1139.5	812			67
Helix V 1013	16	1214.5	887			68
Helix V 1013	25	1214.5	887			68
Helix V 1015	25	1289.5	962			70
Helix V 1017	25	1504	1156.5	279	182	90
Helix V 1019	25	1579	1231.5			91
Helix V 1021	25	1654	1306.5			93
Helix V 1021	30	1654	1307			114
Helix V 1023	25	1777	1381.5			110
Helix V 1023	30	1777	1382			116

Pump curves Wilo-Helix V 16

Wilo-Helix V 1601 – 1621

Minimum Efficiency Index (MEI): ≥ 0.7

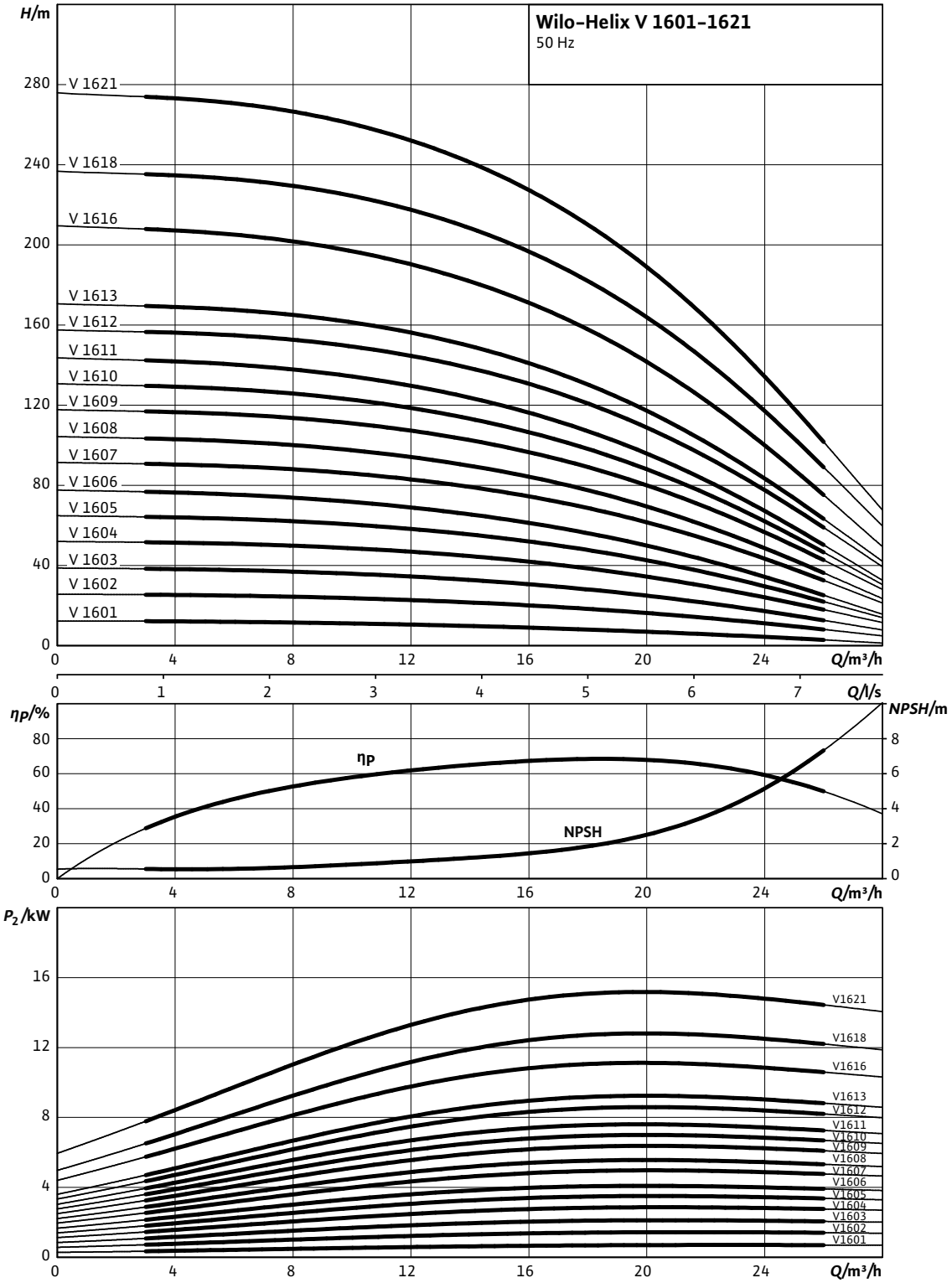

Pump curves in accordance with ISO 9906, class 2

Motor data Wilo-Helix V 16

Motor data						
Wilo-Helix...	**Nominal motor power**	**Nominal current 3~230 V, 50 Hz**	**Nominal current 3~400 V, 50 Hz**	**Motor efficiency**		
	P_2	I_N		$\eta_{m\ 50\%}$	$\eta_{m\ 75\%}$	$\eta_{m\ 100\%}$
	kW	A		%		
Helix V 1601	0.75	3.06	1.77	76.0	77.4	77.4
Helix V 1602	1.50	5.70	3.30	80.0	81.3	81.3
Helix V 1603	2.20	8.00	4.60	82.0	83.2	83.2
Helix V 1604	3.00	11.60	6.70	82.5	85.0	84.6
Helix V 1605	4.00	13.50	7.80	85.0	85.8	85.8
Helix V 1606	4.00	13.50	7.80	85.0	85.8	85.8
Helix V 1607	5.50	–	10.70	85.2	86.9	88.1
Helix V 1608	5.50	–	10.70	85.2	86.9	88.1
Helix V 1609	7.50	–	14.00	88.5	89.9	89.5
Helix V 1610	7.50	–	14.00	88.5	89.9	89.5
Helix V 1611	7.50	–	14.00	88.5	89.9	89.5
Helix V 1612	9.00	–	16.30	86.6	88.4	88.8
Helix V 1613	9.00	–	16.30	86.6	88.4	88.8
Helix V 1616	11.00	–	19.40	87.5	89.3	89.4
Helix V 1618	15.00	–	25.70	88.4	90.2	90.3
Helix V 1621	15.00	–	25.70	88.4	90.2	90.3

Motor efficiency based on 400 V, 50 Hz

Dimensions, weights Wilo-Helix V 16

Dimension drawing

Helix V 16, PN 16

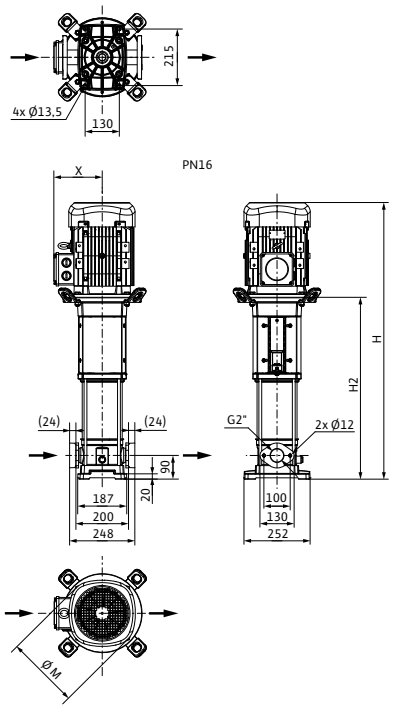

Dimension drawing

Helix V 16, PN 25

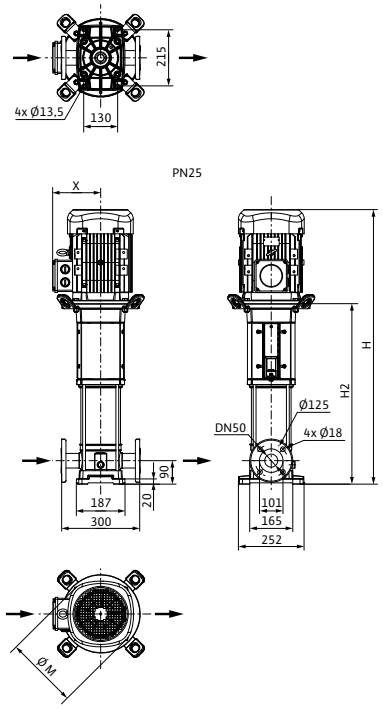

Dimension drawing

Helix V 16, P_{max}: 30 bar

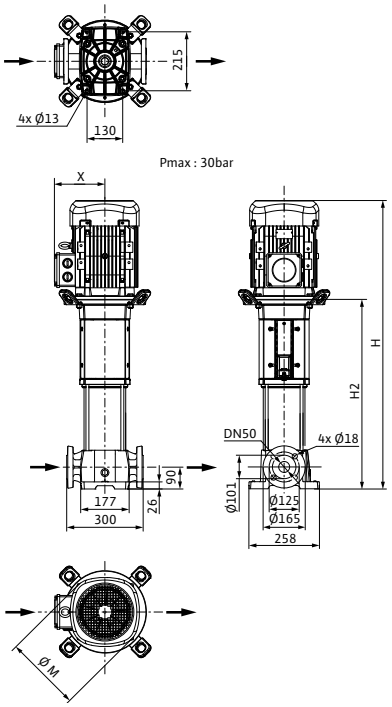

Dimensions, weights Wilo-Helix V 16

Dimensions, weights						
Wilo-Helix...	**Maximum operating pressure**	**Dimensions**				**Weight approx.**
	p_{max}	*H*	*H2*	*Ø M*	*X*	*m*
	bar	mm				kg
Helix V 1601	16	696	452	146	127	32
Helix V 1601	25	696	452			32
Helix V 1602	16	729	462	193	149	38
Helix V 1602	25	729	462			38
Helix V 1603	16	779	512			41
Helix V 1603	25	779	512			41
Helix V 1604	16	889	572	194	170	46
Helix V 1604	25	889	572			47
Helix V 1605	16	971	622	218	175	57
Helix V 1605	25	971	622			57
Helix V 1606	16	1021	672			58
Helix V 1606	25	1021	672			58
Helix V 1607	16	1050	722	220	160	66
Helix V 1607	25	1050	722			66
Helix V 1608	16	1100	772			67
Helix V 1608	25	1100	772			67
Helix V 1609	16	1289	942	279	182	86
Helix V 1609	25	1289	942			86
Helix V 1610	16	1439	1092			88
Helix V 1610	25	1439	1092			88
Helix V 1611	16	1439	1092			89
Helix V 1611	25	1439	1092			89
Helix V 1612	25	1487	1092			102
Helix V 1613	25	1637	1242			105
Helix V 1616	25	1897	1421	323	200	132
Helix V 1616	30	1897	1421			158
Helix V 1618	30	1897	1421			159
Helix V 1621	30	2047	1571			162

Pump curves Wilo-Helix V 22

Wilo-Helix V 2201 – 2216

Minimum Efficiency Index (MEI): ≥ 0.7

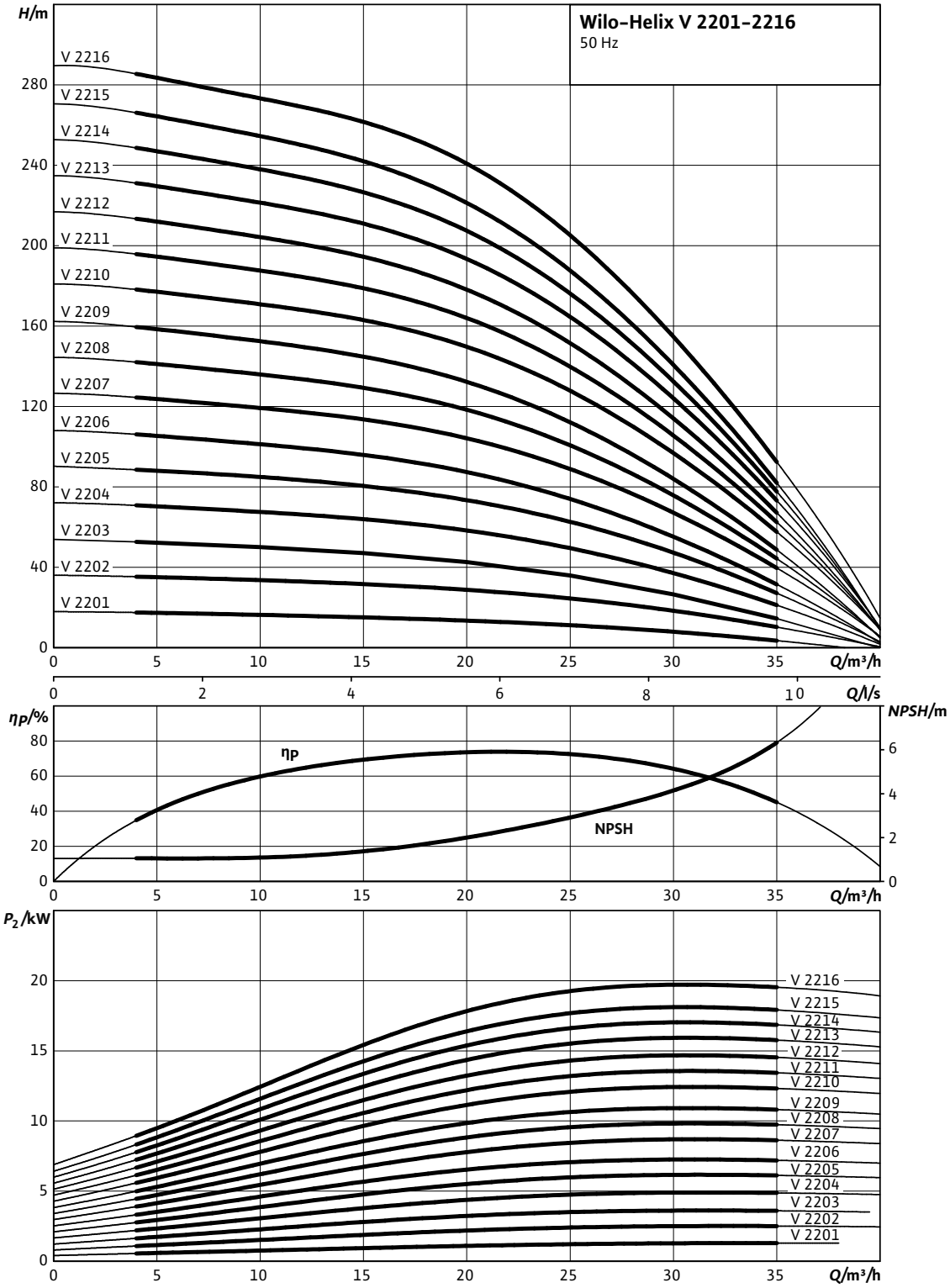

Pump curves in accordance with ISO 9906, class 2

Motor data Wilo-Helix V 22

Motor data						
Wilo-Helix...	**Nominal motor power**	**Nominal current 3~230 V, 50 Hz**	**Nominal current 3~400 V, 50 Hz**	**Motor efficiency**		
	P_2	I_N		$\eta_{m\ 50\%}$	$\eta_{m\ 75\%}$	$\eta_{m\ 100\%}$
	kW	A		%		
Helix V 2201	1.50	5.70	3.30	80.0	81.3	81.3
Helix V 2202	3.00	11.60	6.70	82.5	85.0	84.6
Helix V 2203	4.00	13.50	7.80	85.0	85.8	85.8
Helix V 2204	5.50	–	10.70	85.2	86.9	88.1
Helix V 2205	7.50	–	14.00	88.5	89.9	89.5
Helix V 2206	7.50	–	14.00	88.5	89.9	89.5
Helix V 2207	9.00	–	16.30	86.6	88.4	88.8
Helix V 2208	11.00	–	19.40	87.5	89.3	89.4
Helix V 2209	11.00	–	19.40	87.5	89.3	89.4
Helix V 2210	15.00	–	25.70	88.4	90.2	90.3
Helix V 2211	15.00	–	25.70	88.4	90.2	90.3
Helix V 2212	15.00	–	25.70	88.4	90.2	90.3
Helix V 2213	18.50	–	31.40	89.0	90.8	90.9
Helix V 2214	18.50	–	31.40	89.0	90.8	90.9
Helix V 2215	18.50	–	31.40	89.0	90.8	90.9
Helix V 2216	22.00	–	39.20	91.0	91.9	91.3
Helix V 2201	1.50	5.70	3.30	80.0	81.3	81.3
Helix V 2202	3.00	11.60	6.70	82.5	85.0	84.6
Helix V 2203	4.00	13.50	7.80	85.0	85.8	85.8
Helix V 2204	5.50	–	10.70	85.2	86.9	88.1
Helix V 2205	7.50	–	14.00	88.5	89.9	89.5
Helix V 2206	7.50	–	14.00	88.5	89.9	89.5
Helix V 2207	9.00	–	16.30	86.6	88.4	88.8
Helix V 2208	11.00	–	19.40	87.5	89.3	89.4
Helix V 2204	5.50	–	10.70	85.2	86.9	88.1
Helix V 2205	7.50	–	14.00	88.5	89.9	89.5
Helix V 2206	7.50	–	14.00	88.5	89.9	89.5
Helix V 2207	9.00	–	16.30	86.6	88.4	88.8
Helix V 2208	11.00	–	19.40	87.5	89.3	89.4
Helix V 2209	11.00	–	19.40	87.5	89.3	89.4
Helix V 2210	15.00	–	25.70	88.4	90.2	90.3
Helix V 2211	15.00	–	25.70	88.4	90.2	90.3
Helix V 2212	15.00	–	25.70	88.4	90.2	90.3
Helix V 2213	18.50	–	31.40	89.0	90.8	90.9
Helix V 2214	18.50	–	31.40	89.0	90.8	90.9
Helix V 2215	18.50	–	31.40	89.0	90.8	90.9
Helix V 2216	22.00	–	39.20	91.0	91.9	91.3

Motor efficiency based on 400 V, 50 Hz

Dimensions, weights Wilo-Helix V 22

Dimension drawing

Helix V 22

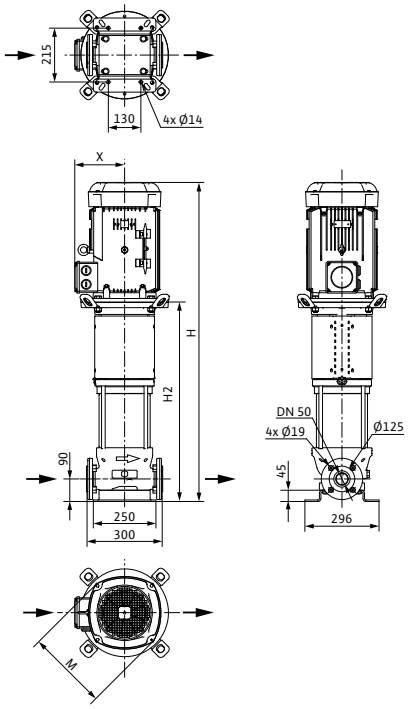

Dimensions, weights Wilo-Helix V 22

Dimensions, weights						
Wilo-Helix...	**Maximum operating pressure**	**Dimensions**				**Weight approx.**
	p_{max}	*H*	*H2*	*Ø M*	*X*	*m*
	bar	mm				kg
Helix V 2201	16	820	541	193	149	60
Helix V 2202	16	868	551	194	170	74
Helix V 2203	16	950	601	218	175	81
Helix V 2204	25	978	651	220	160	87
Helix V 2204	16	978	651			87
Helix V 2205	25	1164	817	279	182	114
Helix V 2205	16	1164	817			114
Helix V 2206	25	1214	867			116
Helix V 2206	16	1214	867			116
Helix V 2207	25	1312	917			123
Helix V 2207	16	1312	917			123
Helix V 2208	25	1473	997	323	200	156
Helix V 2208	16	1473	997			156
Helix V 2209	25	1523	1047			158
Helix V 2210	25	1573	1097			171
Helix V 2211	25	1623	1147			173
Helix V 2212	25	1673	1197			175
Helix V 2213	25	1723	1247			187
Helix V 2214	30	1772	1296			191
Helix V 2215	30	1822	1346			194
Helix V 2216	30	1915	1396	370	248	226

Pump curves, motor data Wilo-Helix V 36

Wilo-Helix V 3601 – 3611

Minimum Efficiency Index (MEI): ≥ 0.7

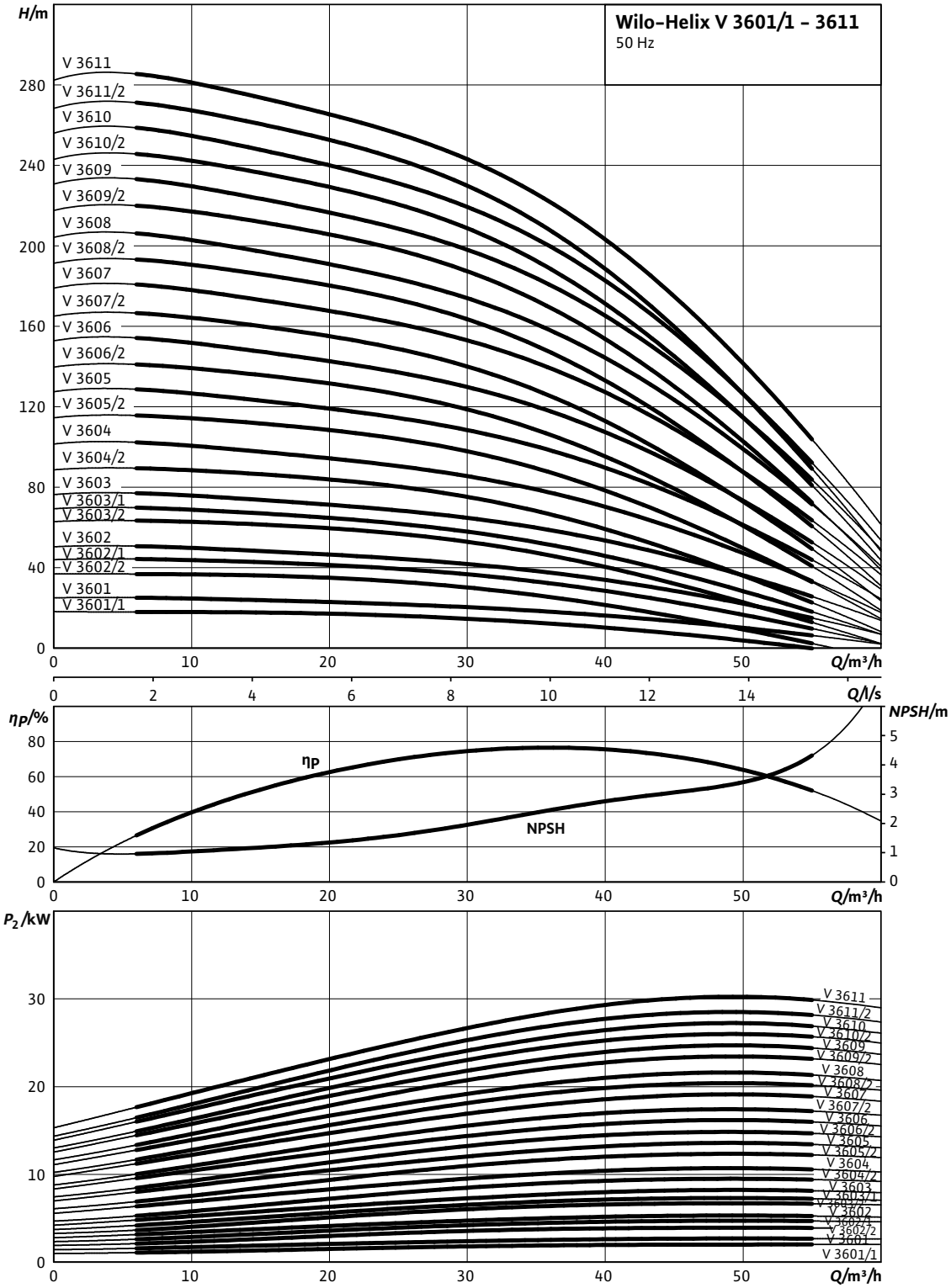

Pump curves in accordance with ISO 9906, class 2

Pump curves, motor data Wilo-Helix V 36

Motor data						
Wilo-Helix...	**Nominal motor power**	**Nominal current 3~230 V, 50 Hz**	**Nominal current 3~400 V, 50 Hz**	**Motor efficiency**		
	P_2	I_N		$\eta_{m\ 50\%}$	$\eta_{m\ 75\%}$	$\eta_{m\ 100\%}$
	kW	A		%		
Helix V 3601/1	2.20	8.00	4.60	82.0	83.2	83.2
Helix V 3601	3.00	11.60	6.70	82.5	85.0	84.6
Helix V 3602/2	4.00	13.50	7.80	85.0	85.8	85.8
Helix V 3602/1	5.50	–	10.70	85.2	86.9	88.1
Helix V 3602	5.50	–	10.70	85.2	86.9	88.1
Helix V 3603/2	7.50	–	14.00	88.5	89.9	89.5
Helix V 3603/1	7.50	–	14.00	88.5	89.9	89.5
Helix V 3603	9.00	–	16.30	86.6	88.4	88.8
Helix V 3604/2	11.00	–	19.40	87.5	89.3	89.4
Helix V 3604	11.00	–	19.40	87.5	89.3	89.4
Helix V 3605/2	15.00	–	25.70	88.4	90.2	90.3
Helix V 3605	15.00	–	25.70	88.4	90.2	90.3
Helix V 3606/2	15.00	–	25.70	88.4	90.2	90.3
Helix V 3606	18.50	–	31.40	89.0	90.8	90.9
Helix V 3607/2	18.50	–	31.40	89.0	90.8	90.9
Helix V 3607	22.00	–	39.20	91.0	91.9	91.3
Helix V 3608/2	22.00	–	39.20	91.0	91.9	91.3
Helix V 3608	22.00	–	39.20	91.0	91.9	91.3
Helix V 3609/2	30.00	–	55.10	90.3	91.8	92.0
Helix V 3609	30.00	–	55.10	90.3	91.8	92.0
Helix V 3610/2	30.00	–	55.10	90.3	91.8	92.0
Helix V 3610	30.00	–	55.10	90.3	91.8	92.0
Helix V 3611/2	30.00	–	55.10	90.3	91.8	92.0
Helix V 3611	37.00	–	70.00	90.1	91.9	92.5

Motor efficiency based on 400 V, 50 Hz

Dimensions, weights Wilo-Helix V 36

Dimension drawing

Helix V 36

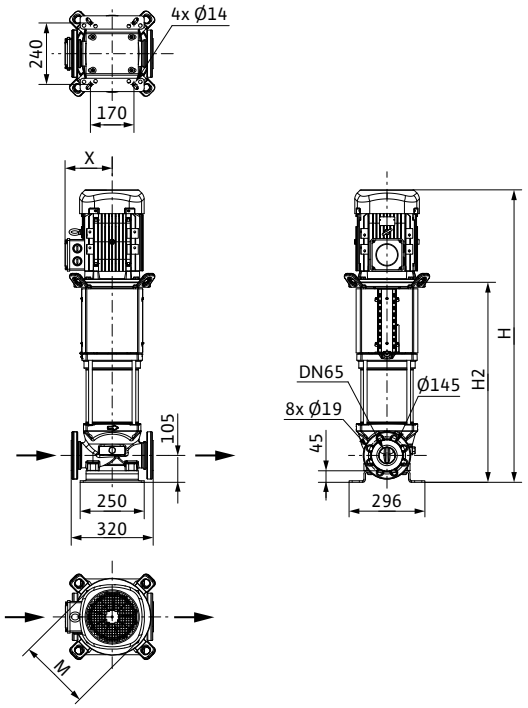

Dimensions, weights Wilo-Helix V 36

Dimensions, weights						
Wilo-Helix...	**Maximum operating pressure**	**Dimensions**				**Weight approx.**
	p_{max}	*H*	*H2*	*Ø M*	*X*	*m*
	bar	mm				kg
Helix V 3601/1	16	801	522	184	149	71
Helix V 3601	16	849	532	194	170	82
Helix V 3602/2	16	948	599	218	175	90
Helix V 3602/1	16	926	599	232	160	95
Helix V 3602	16	926	599			95
Helix V 3603/2	16	1177	782	220		125
Helix V 3603/2	25	1177	782			125
Helix V 3603/1	16	1177	782			125
Helix V 3603/1	25	1177	782			125
Helix V 3603	16	1177	782	279	182	130
Helix V 3603	25	1177	782			130
Helix V 3604/2	16	1354	878	323	200	165
Helix V 3604/2	25	1354	878			165
Helix V 3604	16	1354	878			165
Helix V 3604	25	1354	878			165
Helix V 3605/2	16	1421	945			185
Helix V 3605/2	25	1421	945			185
Helix V 3605	16	1421	945			185
Helix V 3605	25	1421	945			185
Helix V 3606/2	16	1488	1012			189
Helix V 3606/2	25	1488	1012			189
Helix V 3606	16	1488	1012			192
Helix V 3606	25	1488	1012			192
Helix V 3607/2	25	1554	1078			195
Helix V 3607	25	1554	1078			218
Helix V 3608/2	25	1621	1145			221
Helix V 3608	25	1621	1145			221
Helix V 3609/2	25	1767	1212	415	261	267
Helix V 3609	25	1767	1212			267
Helix V 3610/2	25	1833	1278			270
Helix V 3610	30	1833	1278			272
Helix V 3611/2	30	1900	1345			276
Helix V 3611	30	1900	1345			296

Pump curves, motor data Wilo-Helix V 52

Wilo-Helix V 5201 – 5210

Minimum Efficiency Index (MEI): ≥ 0.7

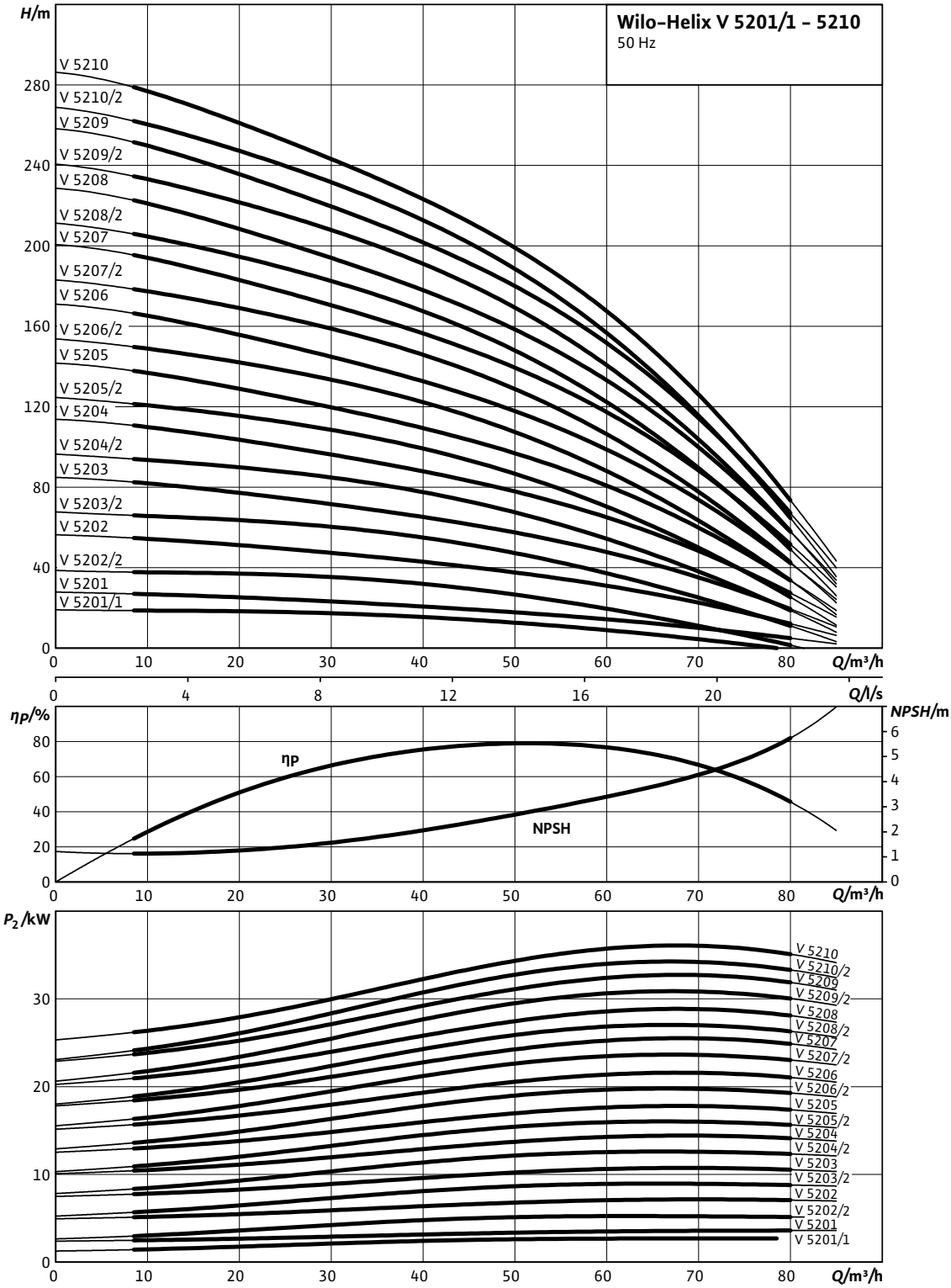

Pump curves in accordance with ISO 9906, class 2

Pump curves, motor data Wilo-Helix V 52

Motor data						
Wilo-Helix...	**Nominal motor power**	**Nominal current 3~230 V, 50 Hz**	**Nominal current 3~400 V, 50 Hz**	**Motor efficiency**		
	P_2	I_N		$\eta_{m\ 50\%}$	$\eta_{m\ 75\%}$	$\eta_{m\ 100\%}$
	kW	A		%		
Helix V 5201/1	3.00	11.60	6.70	82.5	85.0	84.6
Helix V 5201	4.00	13.50	7.80	85.0	85.8	85.8
Helix V 5202/2	5.50	–	10.70	85.2	86.9	88.1
Helix V 5202	7.50	–	14.00	88.5	89.9	89.5
Helix V 5203/2	11.00	–	19.40	87.5	89.3	89.4
Helix V 5203	11.00	–	19.40	87.5	89.3	89.4
Helix V 5204/2	15.00	–	25.70	88.4	90.2	90.3
Helix V 5204	15.00	–	25.70	88.4	90.2	90.3
Helix V 5205/2	18.50	–	31.40	89.0	90.8	90.9
Helix V 5205	18.50	–	31.40	89.0	90.8	90.9
Helix V 5206/2	22.00	–	39.20	91.0	91.9	91.3
Helix V 5206	22.00	–	39.20	91.0	91.9	91.3
Helix V 5207/2	30.00	–	55.10	90.3	91.8	92.0
Helix V 5207	30.00	–	55.10	90.3	91.8	92.0
Helix V 5208/2	30.00	–	55.10	90.3	91.8	92.0
Helix V 5208	30.00	–	55.10	90.3	91.8	92.0
Helix V 5209/2	37.00	–	70.00	90.1	91.9	92.5
Helix V 5209	37.00	–	70.00	90.1	91.9	92.5
Helix V 5210/2	37.00	–	70.00	90.1	91.9	92.5
Helix V 5210	37.00	–	70.00	90.1	91.9	92.5

Motor efficiency based on 400 V, 50 Hz

Dimensions, weights Wilo-Helix V 52

Dimension drawing

Helix V 52

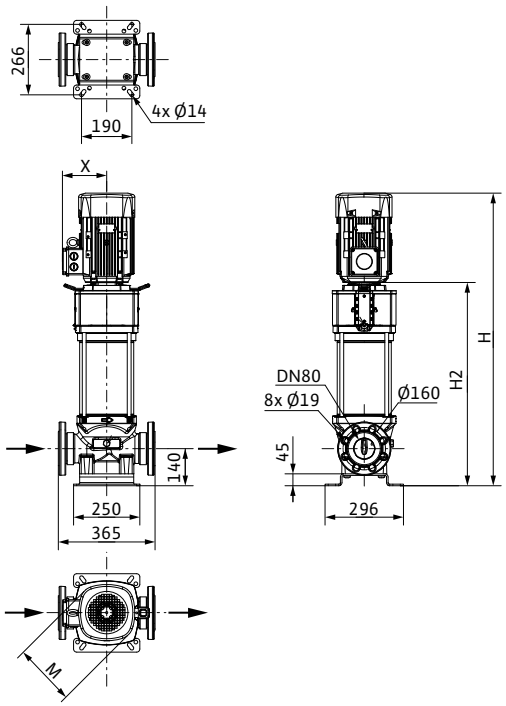

Dimensions, weights Wilo-Helix V 52

Dimensions, weights						
Wilo-Helix...	**Maximum operating pressure**	**Dimensions**				**Weight approx.**
	p_{max}	*H*	*H2*	*Ø M*	*X*	*m*
	bar	mm				kg
Helix V 5201/1	16	884	567	194	170	94
Helix V 5201	16	916	567	218	175	98
Helix V 5202/2	16	995	667	232	160	108
Helix V 5202	16	1178	783	220		134
Helix V 5203/2	16	1389	913	323	200	176
Helix V 5203/2	25	1389	913			176
Helix V 5203	16	1389	913			176
Helix V 5203	25	1389	913			176
Helix V 5204/2	16	1489	1013			197
Helix V 5204/2	25	1489	1013			197
Helix V 5204	16	1489	1013			197
Helix V 5204	25	1489	1013			197
Helix V 5205/2	16	1589	1113			207
Helix V 5205/2	25	1589	1113			207
Helix V 5205	16	1589	1113			207
Helix V 5205	25	1589	1113			207
Helix V 5206/2	16	1689	1213			231
Helix V 5206/2	25	1689	1213			231
Helix V 5206	25	1689	1213			231
Helix V 5207/2	25	1868	1313	415	261	278
Helix V 5207	25	1868	1313			278
Helix V 5208/2	25	1968	1413			282
Helix V 5208	25	1968	1413			282
Helix V 5209/2	25	2068	1513			307
Helix V 5209	30	2068	1513			309
Helix V 5210/2	30	2168	1613			315
Helix V 5210	30	2168	1613			315

Series description Wilo-Helix X-Care

New!

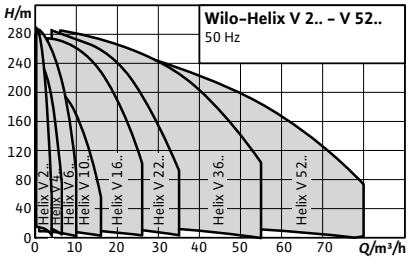

Design
Non self-priming, highly efficient high-pressure multistage centrifugal pump in vertical design with in-line connections with "X-Care" additional module (sensor system for monitoring the pump with building automation connection option)

Application
- Water supply and pressure boosting
- Industrial circulation systems
- Process water
- Cooling water circulation systems
- Fire extinguishing systems
- Washing systems
- Irrigation
  Versions with stainless steel 1.44xx for aggressive media

Type key

Example:	**Helix V 2202/2-3/16/E/X/K/../400-50**
Helix V	Vertical high-pressure multistage centrifugal pump in in-line design
22	Flow rate in m^3/h
02	Number of impellers
2	Number of trimmed impellers (optional)
3	Pump material
	1 = Pump housing 1.4301 (AISI 304) Hydraulics 1.4307 (AISI 304L); [Only Helix V 16.. and smaller]
	2 = Pump housing 1.4409 (AISI 316L) Hydraulics 1.4404 (AISI 316L)
	3 = Pump housing EN-GJL-250 (cataphoretic-coated) Hydraulics 1.4307 (AISI 304L); [Only Helix V 22.. and larger]
16	Maximum operating pressure in bar
	16 = 16 bar (PN 16 flange)
	25 = 25 bar (PN 25 flange)
	30 = 30 bar (PN 40 flange)
E	Gasket type E = EPDM V = FKM
X	"X-Care" special version
K	Mechanical seal in cartridge design
..	Optional
400	Connection voltage in V
50	Frequency in Hz

Special features/product advantages
Helix pumps with an X-Care module combine the advantages of the Helix V series with those of constant monitoring of the pump parameters.
- Integrated dry-running protection
- Integrated pump monitoring
  - Speed
  - Direction of rotation
  - Operating pressure
  - Operating temperature
  - Operating hours counter
  - Start/stop counter
  - Overpressure protection
- LED display
- Interfaces
  - IR
  - CAN

Equipment/function
- Corrosion-resistant impellers, diffusors and stage housings
- Integrated X-Care module with sensor system for monitoring the pump

Technical data
- Electrical connection: 3~400 V (±10 %), 50 Hz
- Fluid temperature range:
  - Helix V 2 – 16 (EPDM), X-Care: -30 to 120 °C
  - Helix V22 – 52 (EPDM), X-Care: -20 to 120 °C
  - Helix V22 – 52 for aggressive media (FKM): -15 to 90 °C (-30 °C with EPDM gasket on request)
- Max. operating pressure: 16/25/30 bar
- Protection class: IP 55
- Max. ambient temperature: +40°C (extended temperature ranges on request)
- Available versions:
  - Helix V 2 – 16: PN 16 with oval flanges, PN 25 with round flanges in accordance with ISO 2531 and ISO 7005
  - Helix V 22 – 52: PN 16 and PN 25 with round flanges in accordance with ISO 2531 and ISO 7005

Series description Wilo-Helix X-Care

Materials

Helix V 2, 4, 6, 10, 16:
Standard version
- Impellers, stage housings and diffusors of stainless steel 1.4307
- Pump housing of stainless steel 1.4301
- Baseplate and lantern EN-GJL-250 (cataphoretic coated)
- Shaft of stainless steel 1.4301 or 1.4462 (depending on version)
- Sleeve under the mechanical seal 1.4404
- O-ring of EPDM (FKM gasket on request)
- Jacket pipe of stainless steel 1.4301

For aggressive media
- Impellers, stage housings and diffusors of stainless steel 1.4404
- Pump housing of stainless steel 1.4404
- Shaft of stainless steel 1.4404 or 1.4462 (depending on version)
- Sleeve under the mechanical seal 1.4404
- O-ring of EPDM (FKM gasket on request)
- Jacket pipe of stainless steel 1.4404

Helix V 22, 36, 52:
Standard version
- Stage housings, impellers, diffusors of stainless steel 1.4307
- Pump housing of cataphoretic-coated grey cast iron EN-GJL 250, loose flanges of EN-GJS 400 for Helix V 36-52.
- Shaft of stainless steel 1.4057
- Sleeve under the mechanical seal 1.4404
- O-ring of EPDM (FKM gasket on request)
- Jacket pipe of stainless steel 1.4301

For aggressive media
- Stage housings, impellers, diffusors of stainless steel 1.4404 with passivation for highest possible resistance to corrosion
- Pump housing: all parts which come in contact with the media are made of cast stainless steel 1.4409 ; loose flanges of cataphoretic-coated grey cast iron EN-GJL 250 for Helix V 22 / EN-GJS 400 for Helix V 36-52.
- Baseplate of stainless steel 1.4301
- Shaft of stainless steel 1.4404 or 1.4462 (depending on version)
- Sleeve under the mechanical seal 1.4404
- O-ring of FKM (EPDM gasket on request)
- Pressure shroud of stainless steel 1.4404

Scope of delivery

- Helix V high-pressure multistage centrifugal pump (X-Care version)
- Helix V 2 – 16: Oval counter flanges with corresponding screws and O-rings (PN16 variant) or bolts and gaskets if a counter flange is used (PN25 variant with round flanges)
- Helix V 22 – 52: Bolts and gaskets if a counter flange is used (PN16 and PN25 with round flanges)
- Installation and operating instructions
- Integrated funnel to make it easier to fill the pump (Helix V 2 – 16 only)

General notes - ErP (ecological design-) directive

- The benchmark for most efficient water pumps is MEI ≥ 0.70
- The efficiency of a pump with a trimmed impeller is usually lower than that of a pump with the full impeller diameter. The trimming of the impeller will adapt the pump to a fixed duty point, leading to reduced energy consumption. The minimum efficiency index (MEI) is based on the full impeller diameter.
- The operation of this water pump with variable duty points may be more efficient and economic when controlled, for example, by the use of a variable speed drive that matches the pump duty to the system.
- Information on benchmark efficiency is available at **www.europump.org/efficiencycharts**

Series description Wilo-Multivert MVIE

Design
Non-self-priming multistage pump with integrated frequency converter

Application
- Water supply and pressure boosting
- Fire extinguishing systems
- Industrial circulation systems
- Process engineering
- Cooling water circulation systems
- Washing and sprinkling systems

Type key

Example:	**MVIE 7003/1-3/16/E/3-2**
MVIE	Vertical high-pressure multistage centrifugal pump
70	Flow rate in m^3/h
03	Number of impellers
1	Number of trimmed impellers; [only MVIE 70.. and 95..]
3	Material 1 = 1.4301 (AISI 304); [only MVIE 8.. and smaller] 2 = 1.4404 (AISI 316L) 3= pump housing EN-GJL-250 (cataphoretic coating), hydraulics 1.4301 (AISI 304); [only MVIE 70.. and 95..]
16	Flange type 16 = flange PN16 (round) 25 = flange PN25 (round) P = Victaulic coupling [only MVIE 8.. and smaller]
E	Gasket type E = EPDM
3	1 = 1~ (alternating current) 3 = 3~ (three-phase current)
2	Number of poles
M13	Only up to MVIE 403, with 1~ (alternating current) Preset operating mode on delivery M13 = mode 1 or 3 (manual or remote control) M2 = mode 2 (pressure regulation mode)

Special features/product advantages
- Easy commissioning
- IEC three-phase AC motor (level IE2)
- Integrated frequency converter
- Full motor protection
- Large control range
- Hydraulics made of stainless steel 1.4301 (AISI 304) or 1.4404 (AISI 316 L)
- All relevant components are KTW and WRAS certified

Equipment/function
- Stainless steel pump in in-line design
- MVIE 2.. to 16-6: PN16 version with oval flange; PN25 version with round flange
- MVIE 16.. to 95.. PN 16/25 with round flange
- IE2-IEC standard motor with integral frequency converter
- Three-phase version with red-button technology and LCD display for status display
- Integrated thermal motor protection

Technical data
- Mains connection 1 ~ 230 V (±10 %), 50 Hz or 230 V (±10 %), 60 Hz
- Mains connection 3 ~ 400 V (±10 %), 50 Hz (Y) or 400 V (±10 %), 60 Hz (Y)
- Fluid temperature -15 to +120 °C
- Max. operating pressure 16/25 bar
- Max. inlet pressure of 10 bar
- Protection class IP 55
- Emitted interference in compliance with EN 61000-6-3
- Interference resistance in compliance with EN 61000-6-2

Materials
- Impellers stainless steel 1.4301/1.4404
- Stage chambers stainless steel 1.4301/1.4404
- Pump housing EN-GJL-250 / 1.4408
- Shaft, depending on type, stainless steel 1.4057 / 1.4404
- Gasket EPDM (EP 851) / FKM (Viton)
- Mechanical seal B-carbon/tungsten carbide, SiC/carbon
- Jacket pipe stainless steel 1.4301 / 1.4404
- Bearing tungsten carbide/ceramic

Scope of delivery
- Pump
- Oval counter flanges Rp 1 to Rp 1 1/2 (only with MVIE 2.. up to MVIE 16..-6 version PN 16)
- Installation and operating instructions

Series description Wilo-Multivert MVIE

General notes - ErP (ecological design-) directive

- The benchmark for most efficient water pumps is MEI ≥ 0.70
- The efficiency of a pump with a trimmed impeller is usually lower than that of a pump with the full impeller diameter. The trimming of the impeller will adapt the pump to a fixed duty point, leading to reduced energy consumption. The minimum efficiency index (MEI) is based on the full impeller diameter.
- The operation of this water pump with variable duty points may be more efficient and economic when controlled, for example, by the use of a variable speed drive that matches the pump duty to the system.
- Information on benchmark efficiency is available at **www.europump.org/efficiencycharts**

Version overview Wilo-Multivert MVIE

	Wilo-Multivert MVIE 2/4/	Wilo-Multivert MVIE 16/	Wilo-Multivert MVIE 70/95
Materials			
Pump base EN-GJL-250 with cataphoretic coating, hydraulics in 1.4301/1.4404 (AISI 304/316L)	–	•	•
Parts in contact with fluid in 1.4301 (AISI 304)	•	•	–
Parts in contact with fluid in 1.4404 (AISI 316L)	•	•	–
Seal version			
Seal	EPDM/FKM (Viton)	EPDM/FKM (Viton)	EPDM
Hydraulic connection			
Threaded connection	–	–	–
Oval flange	•	–	–
Round flange	•	•	•
Victaulic quick coupling	–	–	–
Motor version			
1~230 V, 50 Hz	• (only versions 2../4..)	–	–
3~400 V, 50 Hz	–	–	–
Individual motors for special voltages, 50 Hz or 60 Hz	optional		
Protection class	IP 54	IP 54	IP 54
Explosion protection	–	–	–
Motors with PTC thermistors	•	•	•
Motors with UL certificates	–	–	–
Motors with CSA certificates	–	–	–
Thermal motor protection switch (EM version)	•	•	–
Speed can be controlled via external FC	–	–	–
Integrated frequency converter	•	•	•
Painting			
Individual painting	•	•	•
Mechanical seal			
Tungsten carbide/carbon	•	•	•
SiC/carbon	–	•	–
Tungsten carbide/tungsten carbide	optional	optional	optional
SIC/SIC	optional	optional	optional
Potable water approvals			
KTW	• (only EPDM version)		
WRAS	• (only EPDM version)		

• = available, – = not available

Technical data Wilo-Multivert MVIE

	Wilo-Multivert-MVIE								
	2..	**4..**	**8..**	**16..-6**	**16..**	**32..**	**52..**	**70..**	**95..**
Approved fluids									
Potable water, heating water, process water	•	•	•	•	•	•	•	•	•
Condensate	•	•	•	•	•	•	•	•	•
Water/glycol mixtures (max. 40 %; with admixtures exceeding 10 %, the pumping data must be checked)	•	•	•	•	•	•	•	•	•
Other low viscous fluids (without abrasive or long-fibre constituents, provided they do not corrode the materials used)	•	•	•	•	•	•	•	•	•
Power									
Max. volume flow	7.0	11.0	20.0	34.0	34.0	65.0	98.0	110.0	145.0
Max. delivery head	235	230	190	110	250	185	150	100	75
Fluid temperature	-15 ... 120								
Max. ambient temperature	40	40	40	40	40	40	40	40	40
Operating pressure	16/25	16/25	16/25	16/25	16/25	16/25	16/25	16/25	16/25
Max. inlet pressure	10	10	10	10	10	10	10	10	10
Nominal speed	2900	2900	2900	2900	2900	2900	2900	2900	2900
Motor									
Mains connection 1~ (permitted voltage tolerance +/- 10%)	230 V, 50 Hz or 230 V, 60 Hz								
Mains connection 3~ (permitted voltage tolerance +/- 10%)	400 V, 50 Hz Y or 400 V, 60 Hz Y								
Insulation class	F	F	F	F	F	F	F	F	F
Electromagnetic compatibility	EN 50081-2; EN 50081-1 optional								
Interference resistance	EN 50082-2								
Protection class	IP 55	IP 55	IP 55	IP 55	IP 54	IP 54	IP 54	IP 54	IP 54
Connections									
Flange connections PN 16/PN 25	25	32	40	50	50	65	80	100	100
Victaulic connections	•	•	•	•	–	–	–	–	–
Materials									
Impeller	1.4301/1.4404			1.43041	1.4301/1.4404			1.4301	
Stage chambers	1.4301/1.4404			1.43041	1.4301/1.4404			1.4401	
Pump housing	1.4301/1.4404							1.4301	
Pump shaft	1.4028							1.4301	
Seal	EPDM/FKM (Viton)							EPDM	
Housing cover	1.4301/1.4404							1.4301	
Lower housing section	1.4301/1.4404								
Mechanical seal	Tungsten carbide/carbon/ SiC/carbon								
Pressure shroud	1.4301/1.4404								
Bearing	Tungsten carbide								

• = available, - = not available

Note on inlet pressure
The maximum inlet pressure is calculated by subtracting the maximum delivery head of the pump at Q= 0 from the maximum operating pressure of the system.

Note on materials
1.4301 corresponds to AISI 304, 1.4404 corresponds to AISI 316L.

Pump curves Wilo-Multivert MVIE

Wilo-Multivert MVIE 204-2G

Minimum Efficiency Index (MEI): ≥ 0.1

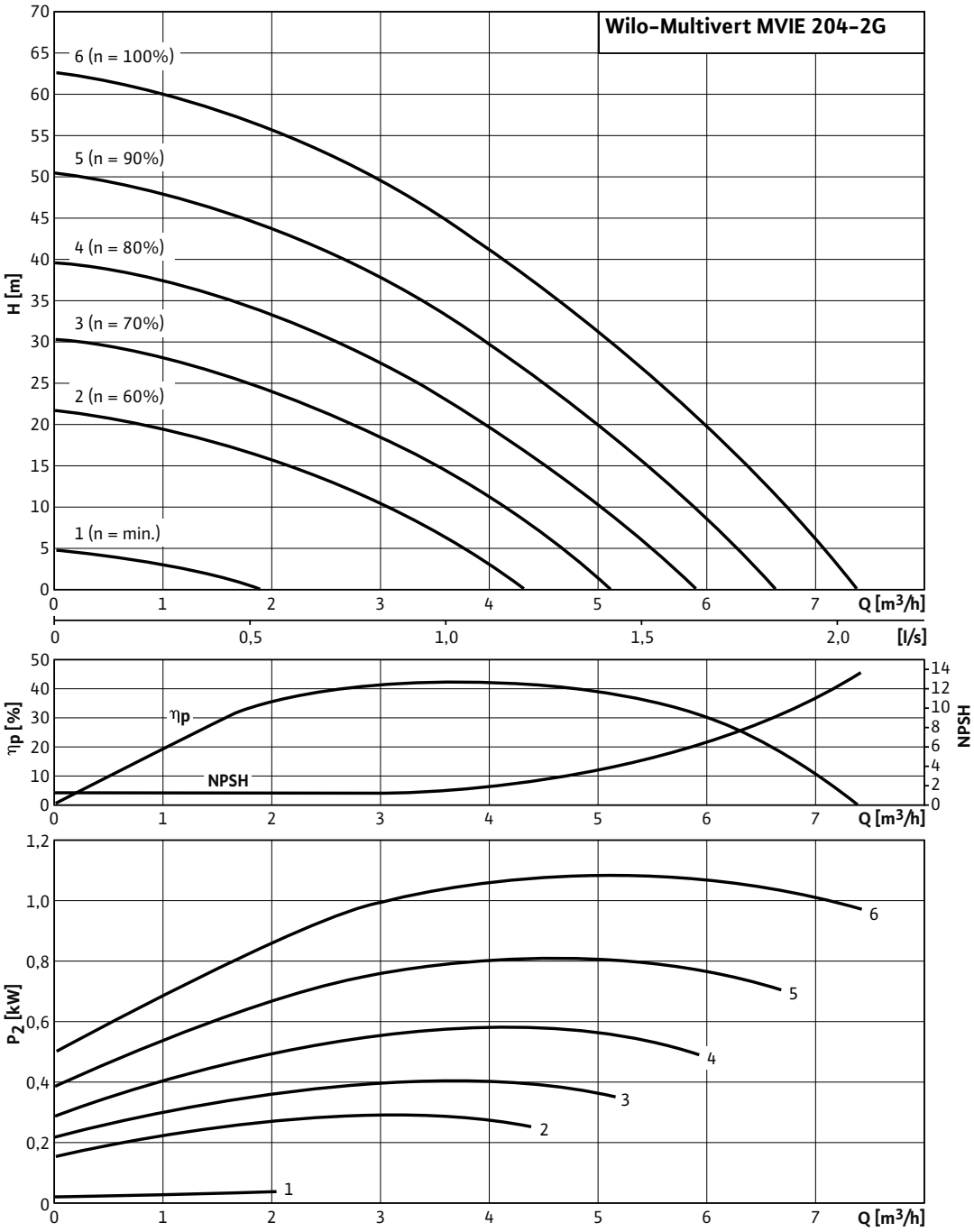

Pump curves in accordance with ISO 9906, class 2

Pump curves Wilo-Multivert MVIE

Wilo-Multivert MVIE 208-2G

Minimum Efficiency Index (MEI): ≥ 0.1

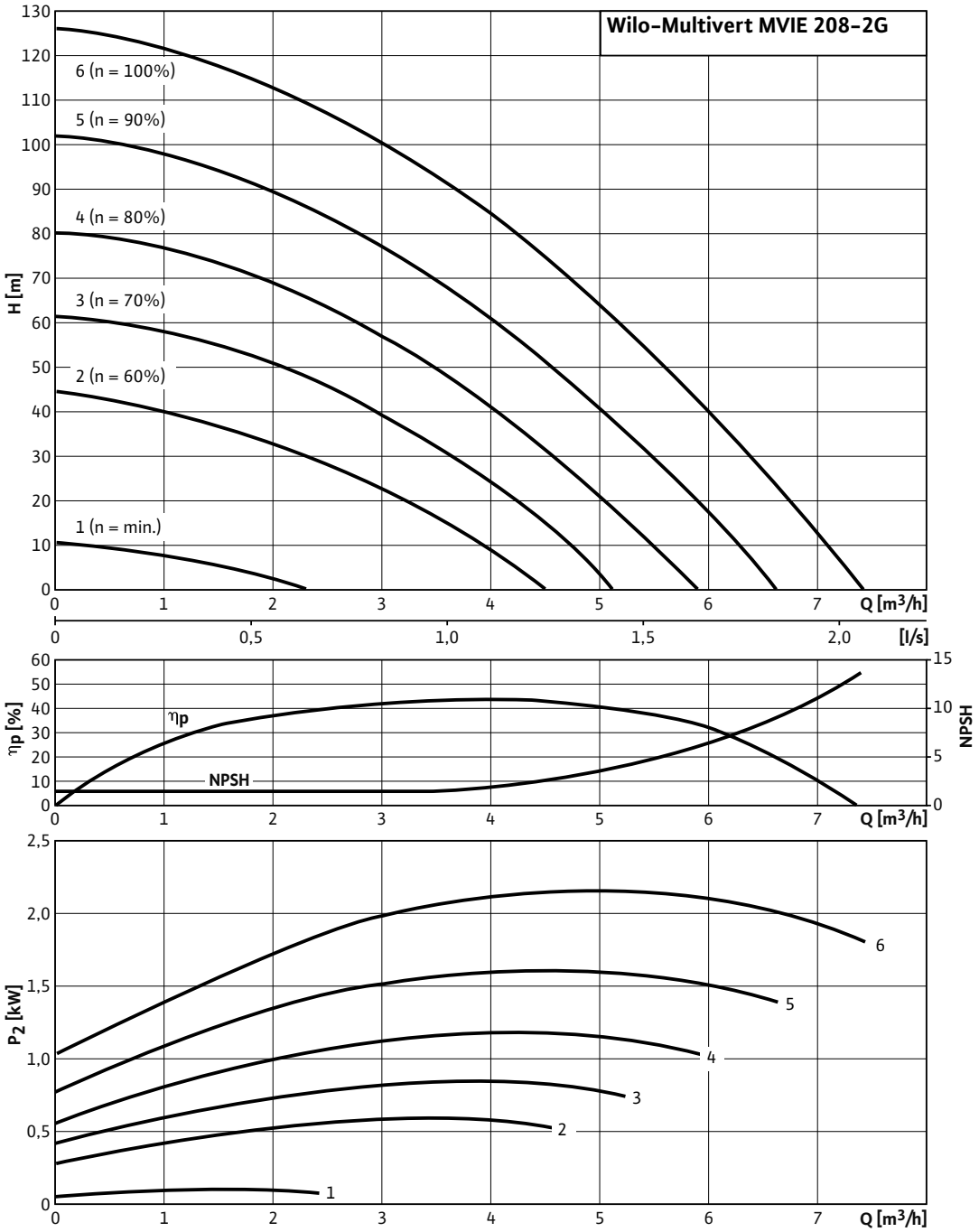

Pump curves in accordance with ISO 9906, class 2

Pump curves Wilo-Multivert MVIE

Wilo-Multivert MVIE 214-2G

Minimum Efficiency Index (MEI): ≥ 0.1

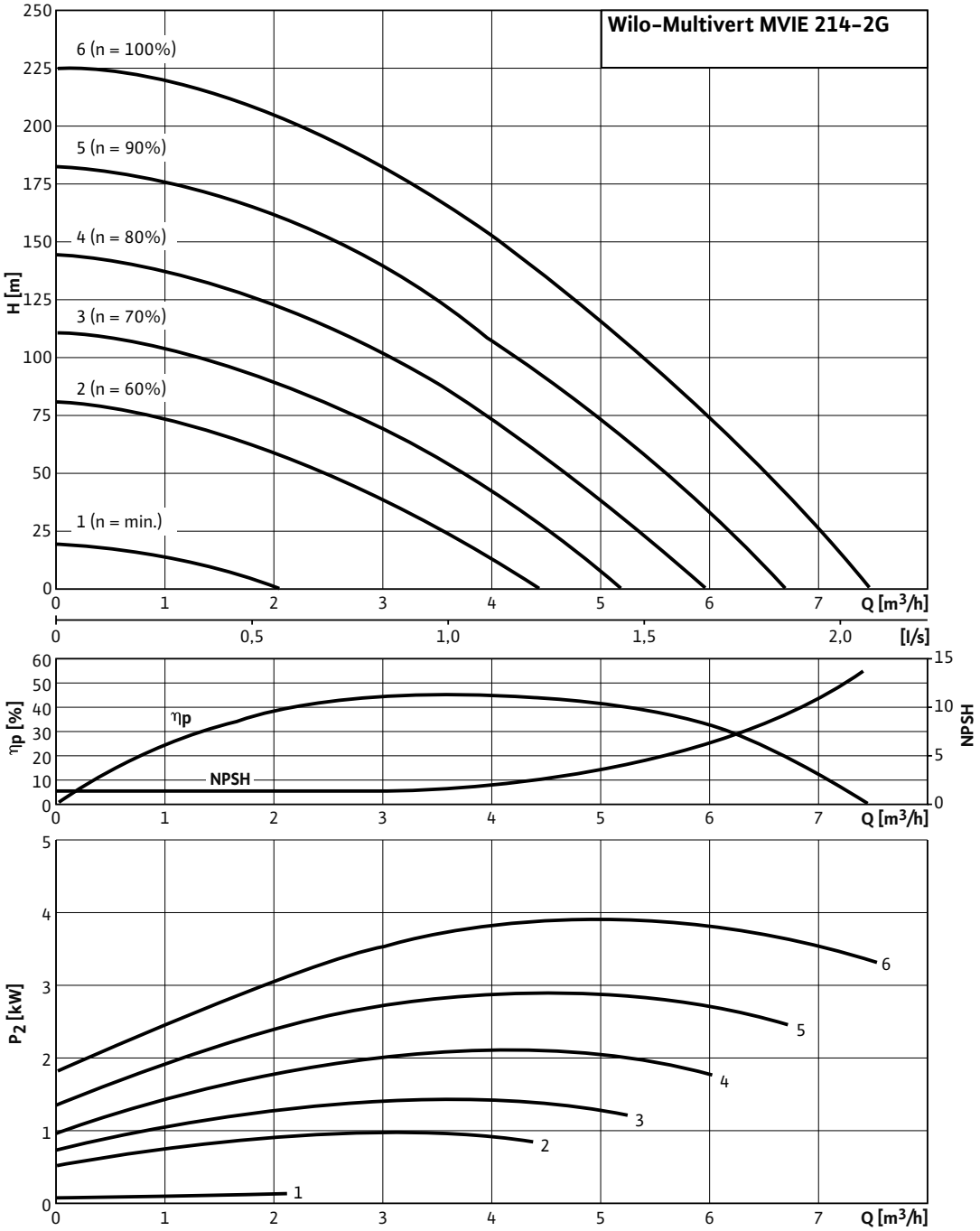

Pump curves in accordance with ISO 9906, class 2

Pump curves Wilo-Multivert MVIE

Wilo-Multivert MVIE 403-2G

Minimum Efficiency Index (MEI): ≥ 0.1

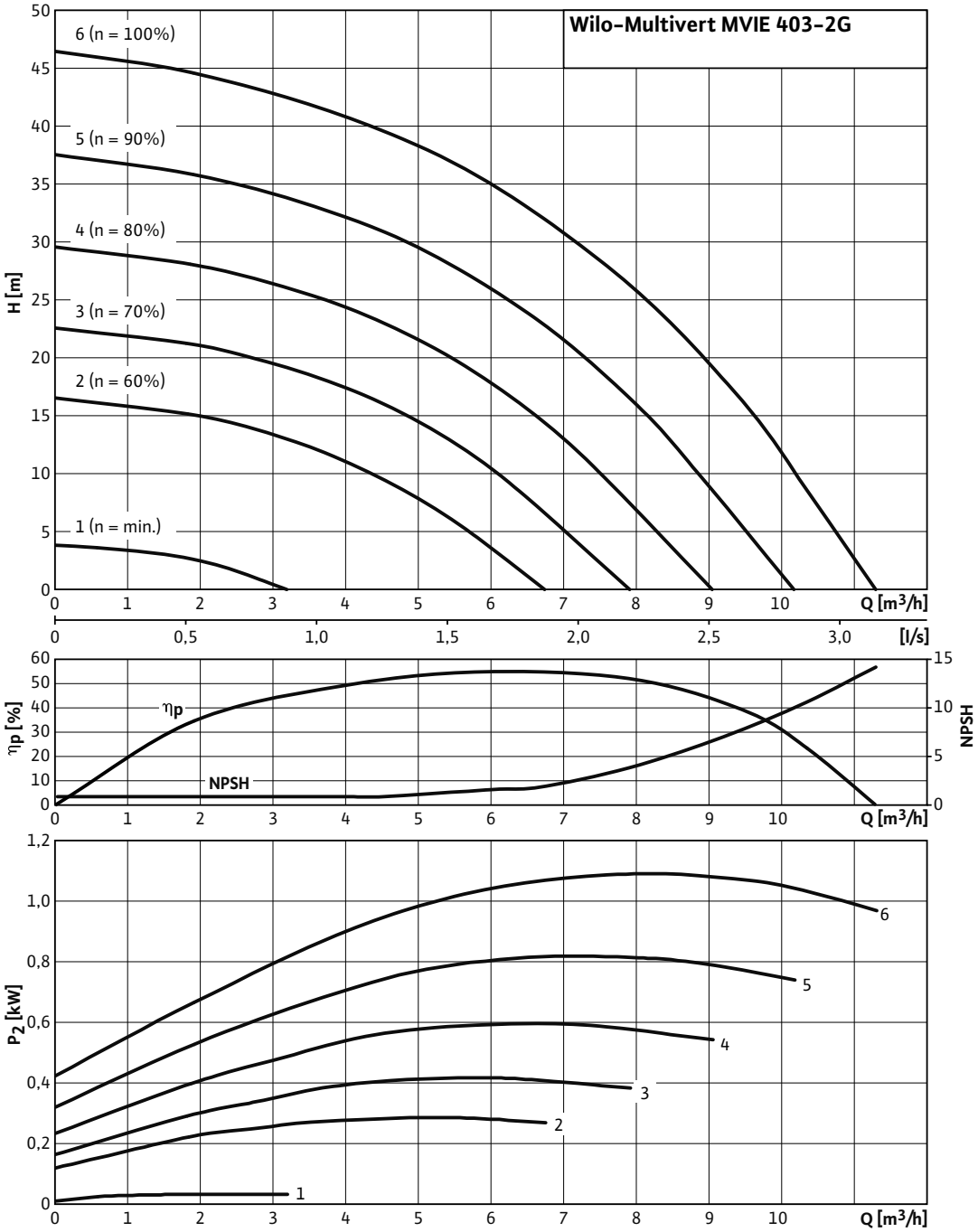

Pump curves in accordance with ISO 9906, class 2

Pump curves Wilo-Multivert MVIE

Wilo-Multivert MVIE 403

Minimum Efficiency Index (MEI): ≥ 0.1

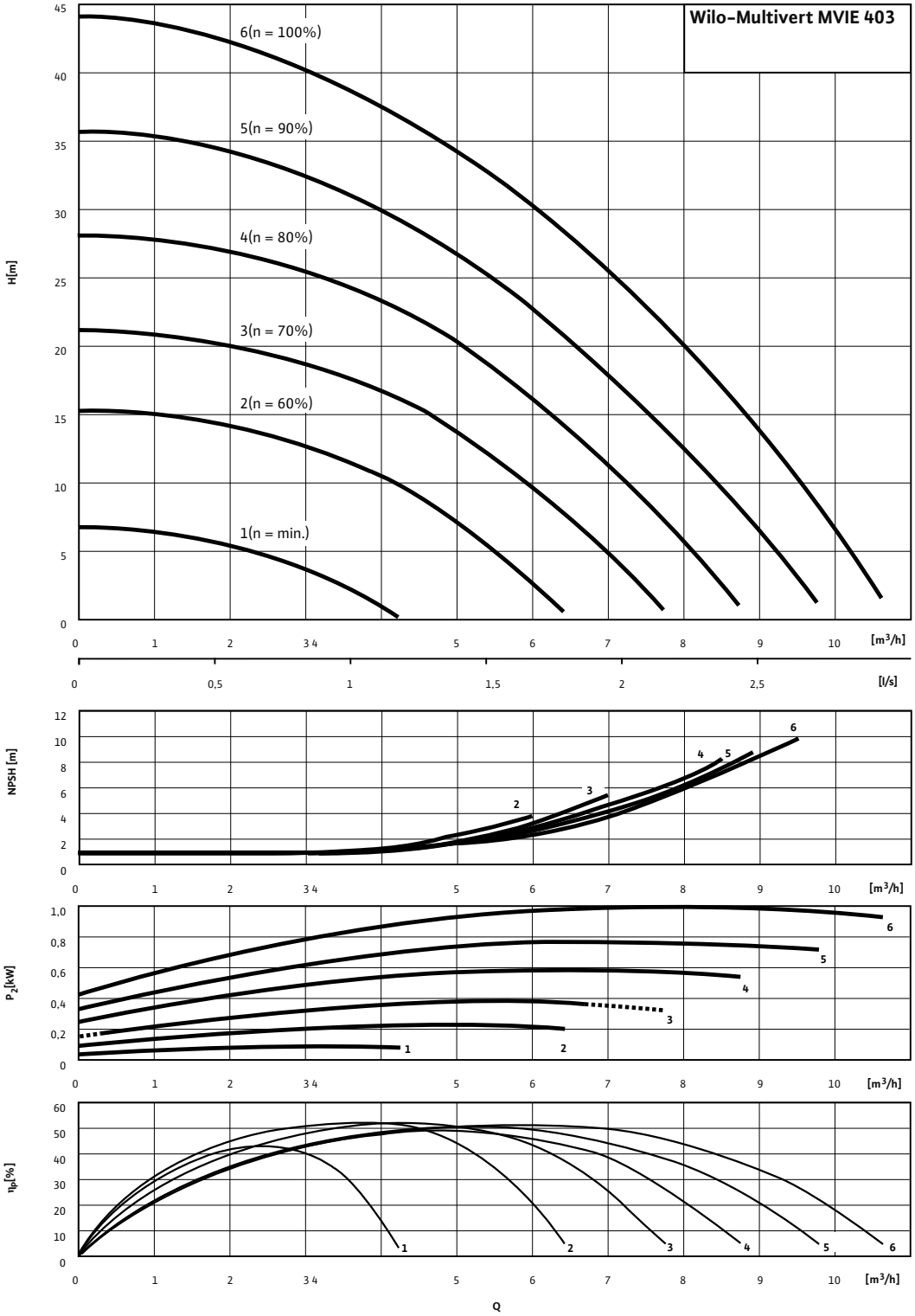

Pump curves in accordance with ISO 9906, class 2

Pump curves Wilo-Multivert MVIE

Wilo-Multivert MVIE 406-2G

Minimum Efficiency Index (MEI): ≥ 0.1

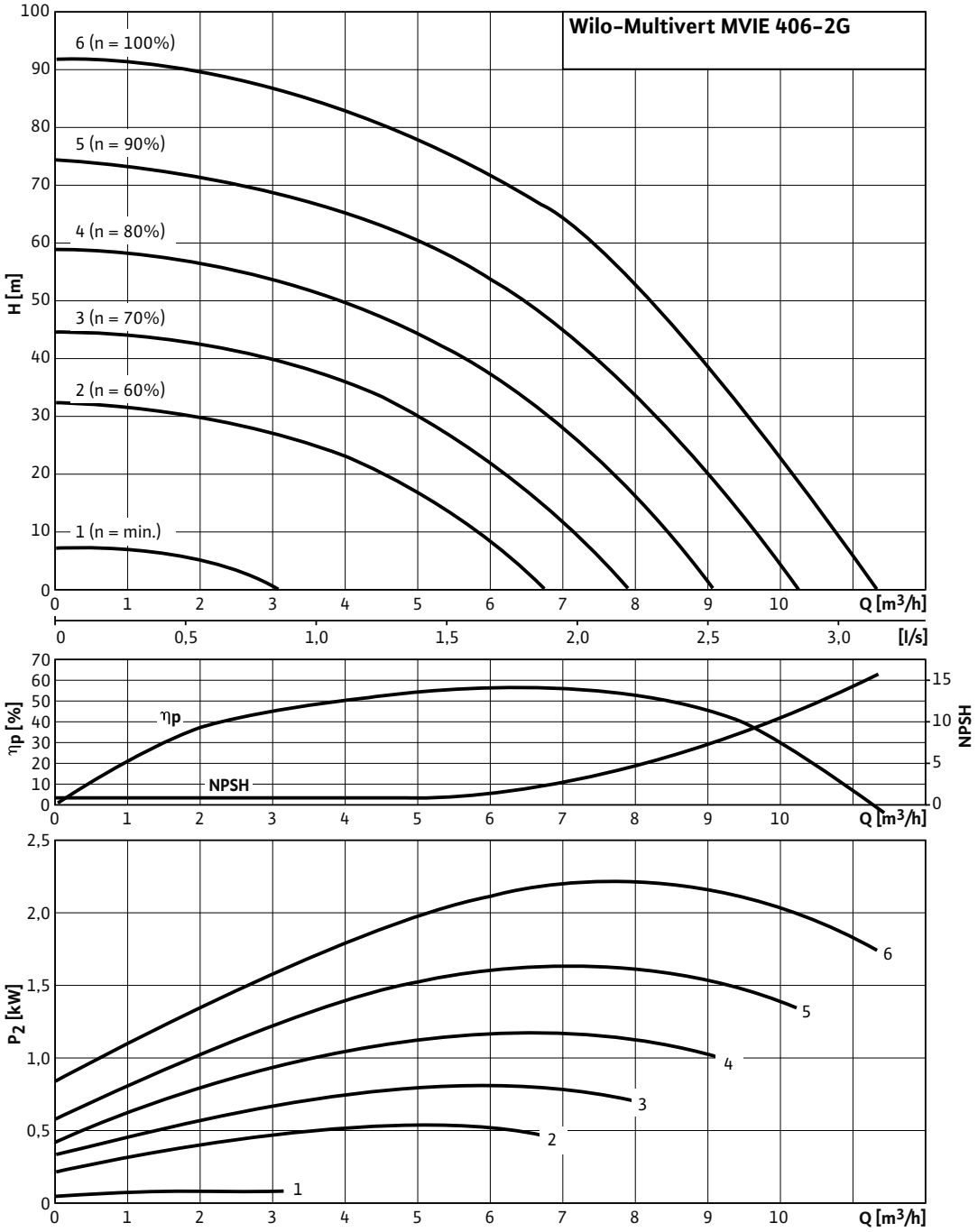

Pump curves in accordance with ISO 9906, class 2

Pump curves Wilo-Multivert MVIE

Wilo-Multivert MVIE 410-2G

Minimum Efficiency Index (MEI): ≥ 0.1

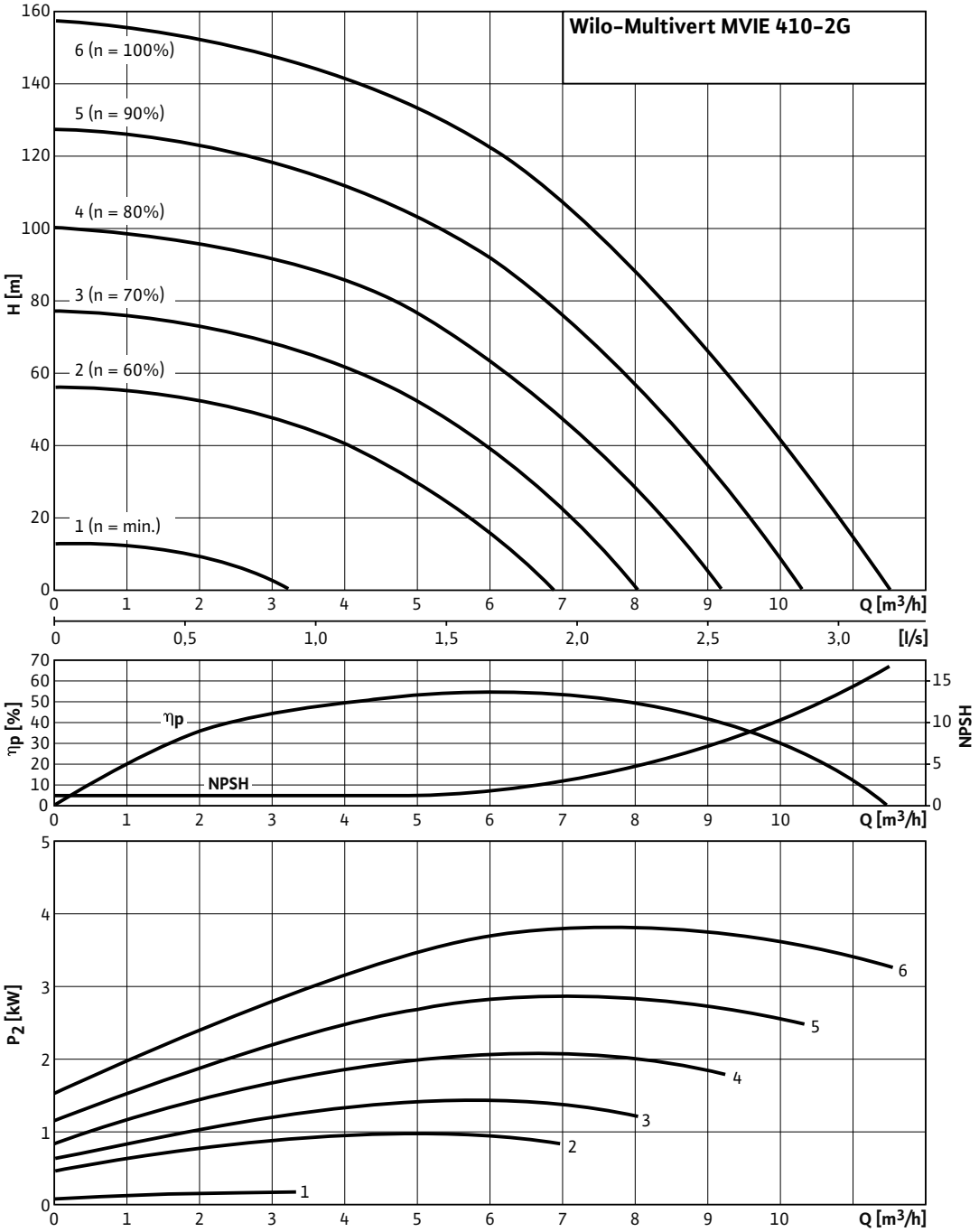

Pump curves in accordance with ISO 9906, class 2

Pump curves Wilo-Multivert MVIE

Wilo-Multivert MVIE 414

Minimum Efficiency Index (MEI): ≥ 0.1

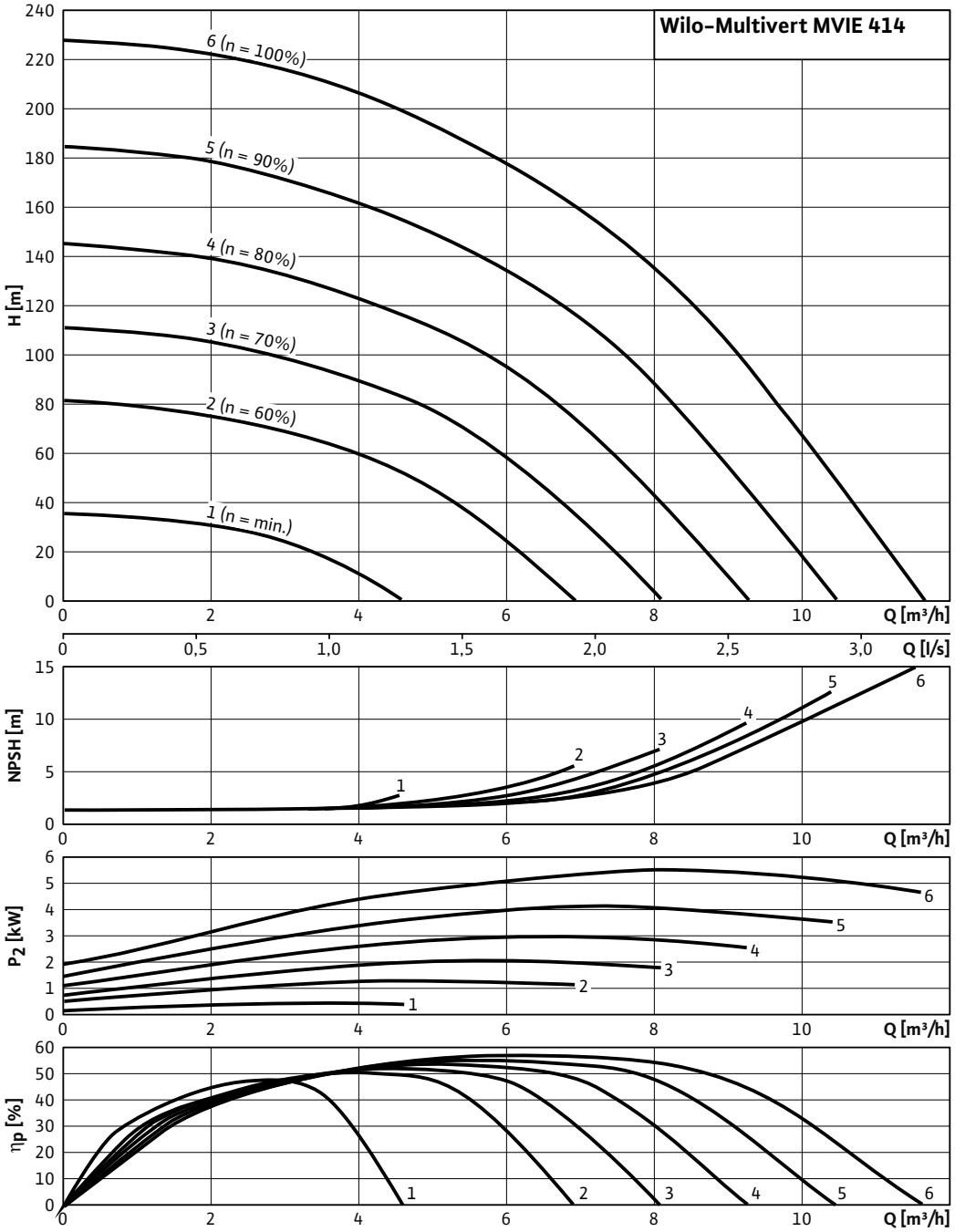

Pump curves in accordance with ISO 9906, class 2

Pump curves Wilo-Multivert MVIE

Wilo-Multivert MVIE 803-2G

Minimum Efficiency Index (MEI): ≥ 0.1

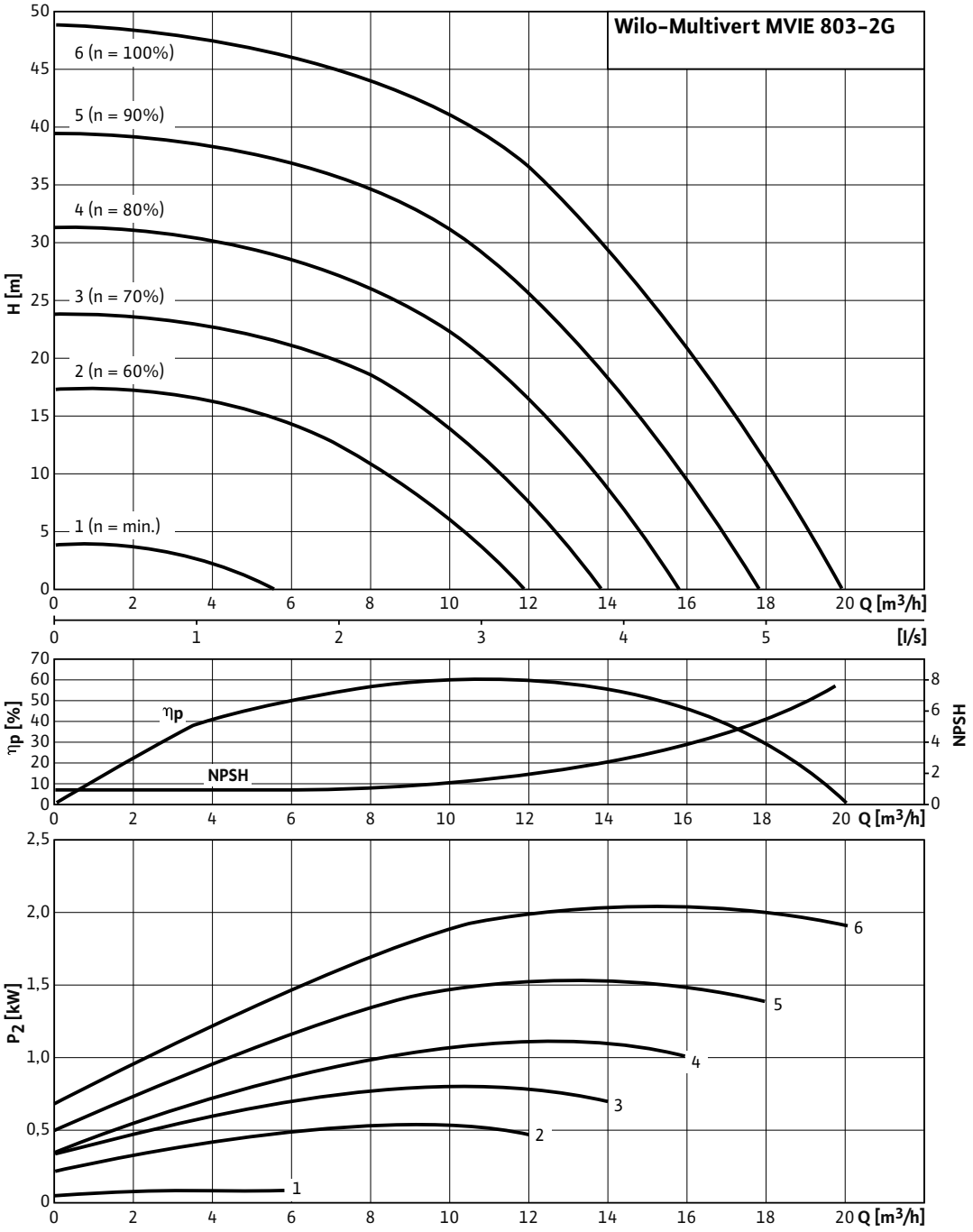

Pump curves in accordance with ISO 9906, class 2

Pump curves Wilo-Multivert MVIE

Wilo-Multivert MVIE 806-2G

Minimum Efficiency Index (MEI): ≥ 0.1

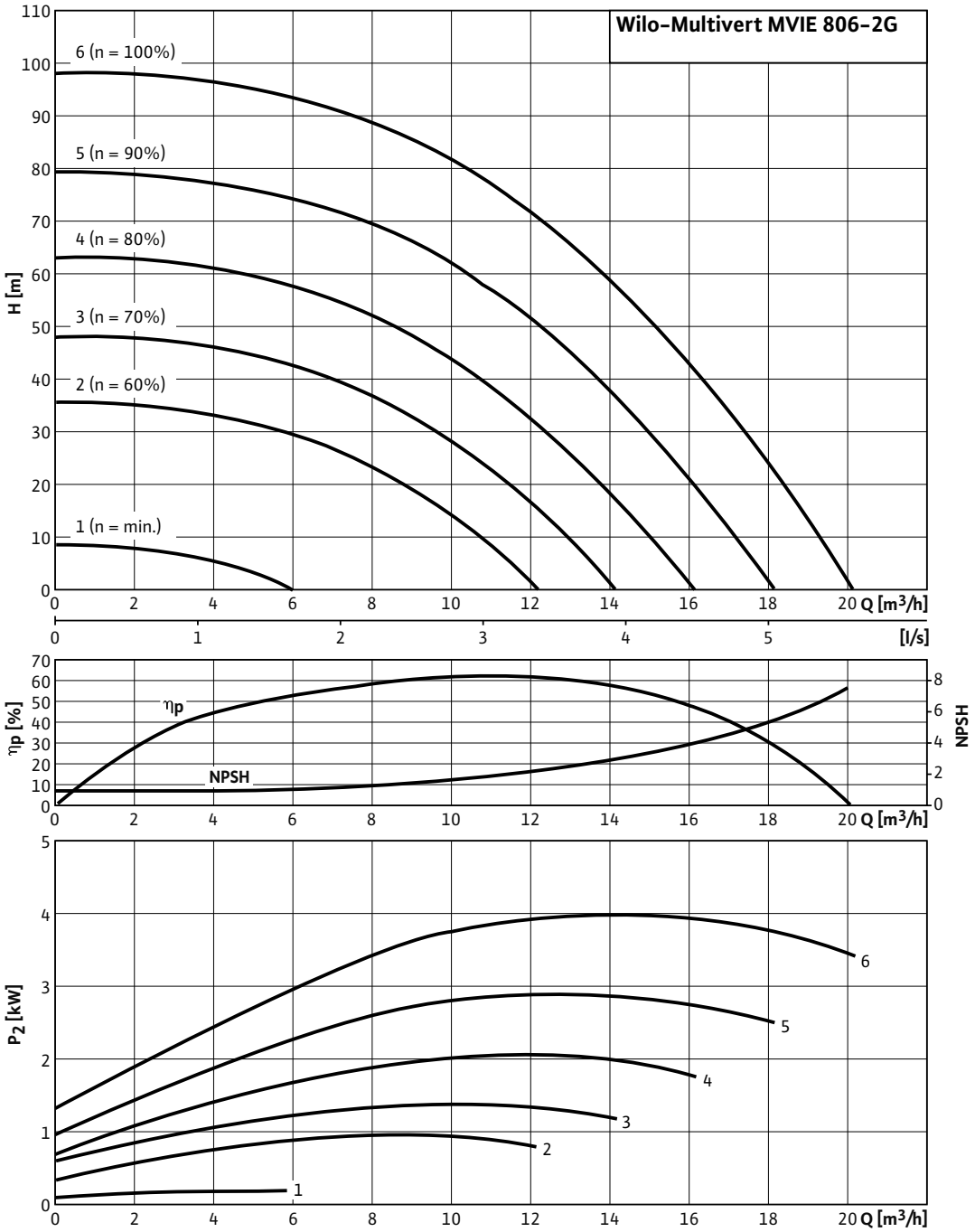

Pump curves in accordance with ISO 9906, class 2

Pump curves Wilo-Multivert MVIE

Wilo-Multivert MVIE 808

Minimum Efficiency Index (MEI): ≥ 0.1

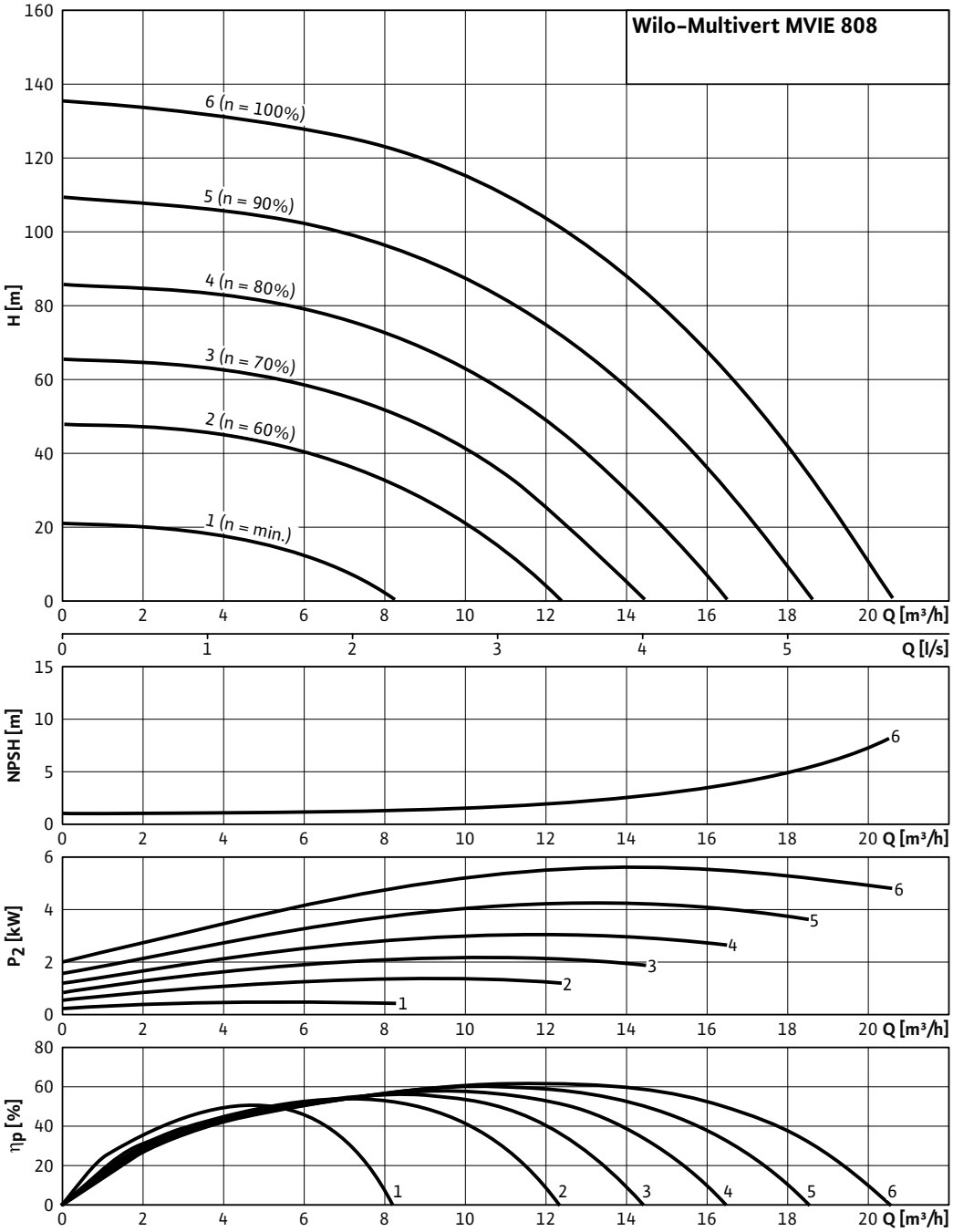

Pump curves in accordance with ISO 9906, class 2

Pump curves Wilo-Multivert MVIE

Wilo-Multivert MVIE 811

Minimum Efficiency Index (MEI): ≥ 0.1

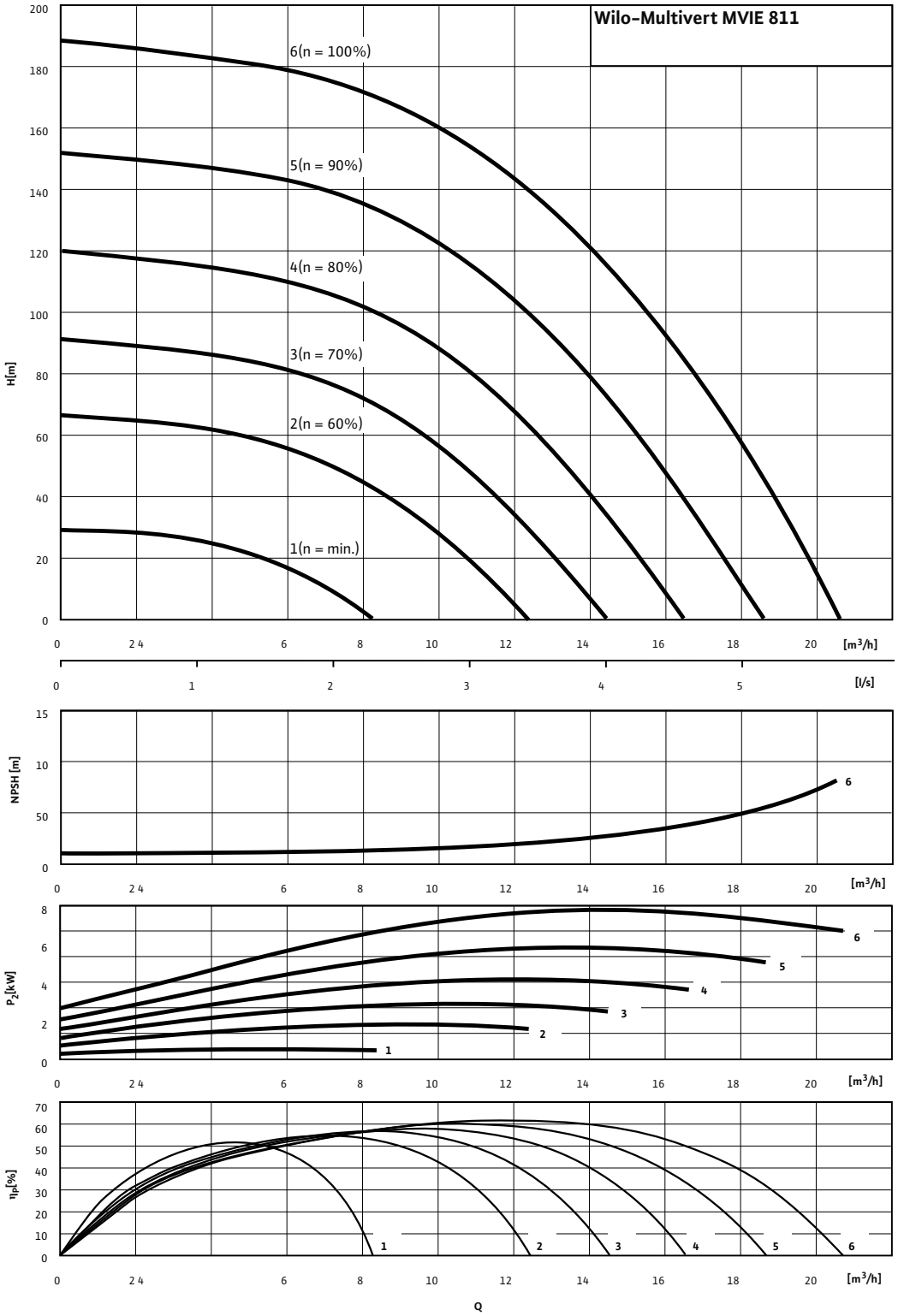

Pump curves in accordance with ISO 9906, class 2

Pump curves Wilo-Multivert MVIE

Wilo-Multivert MVIE 1608

Minimum Efficiency Index (MEI): ≥ 0.1

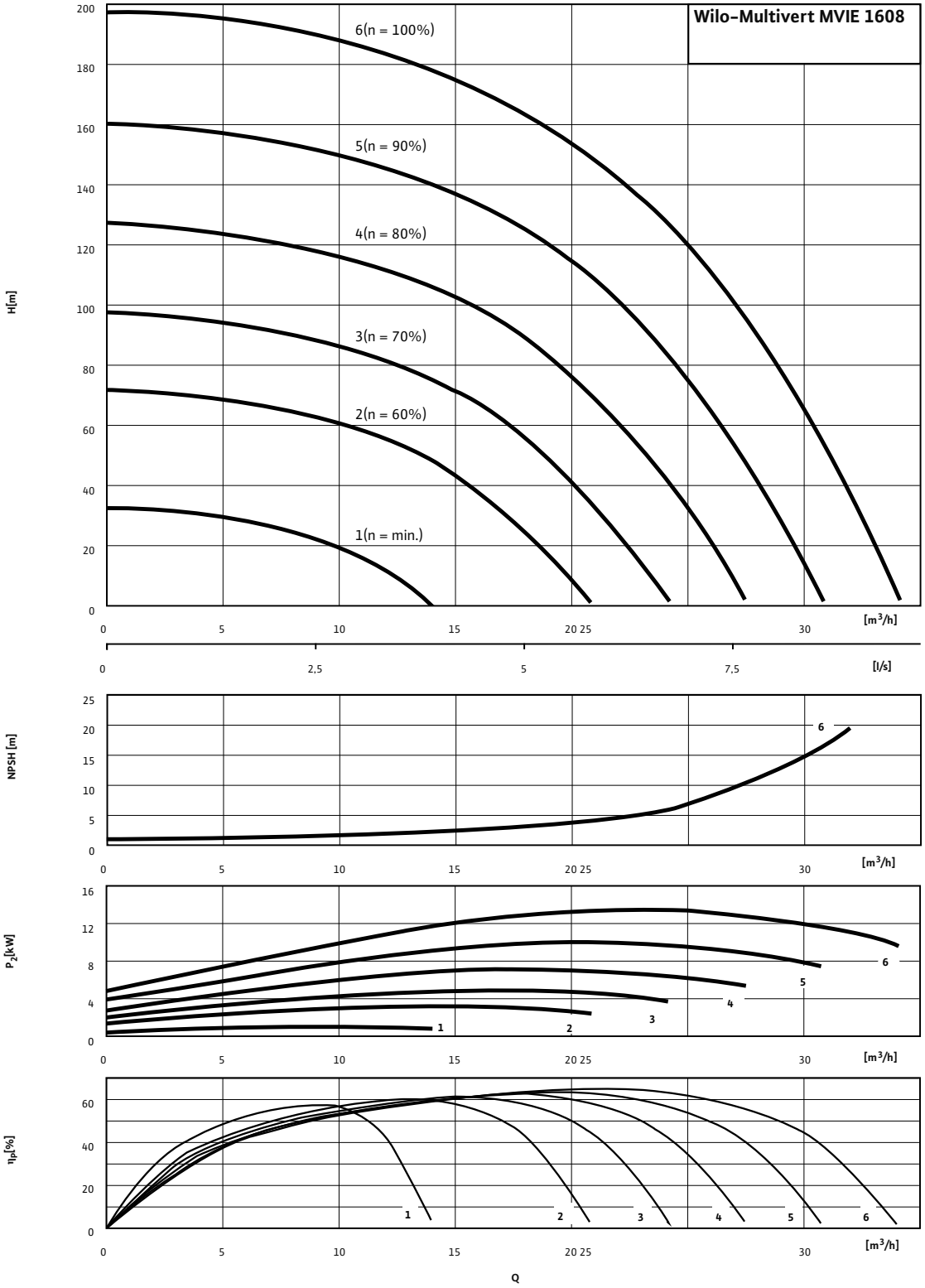

Pump curves in accordance with ISO 9906, class 2

Pump curves Wilo-Multivert MVIE

Wilo-Multivert MVIE 1610

Minimum Efficiency Index (MEI): ≥ 0.1

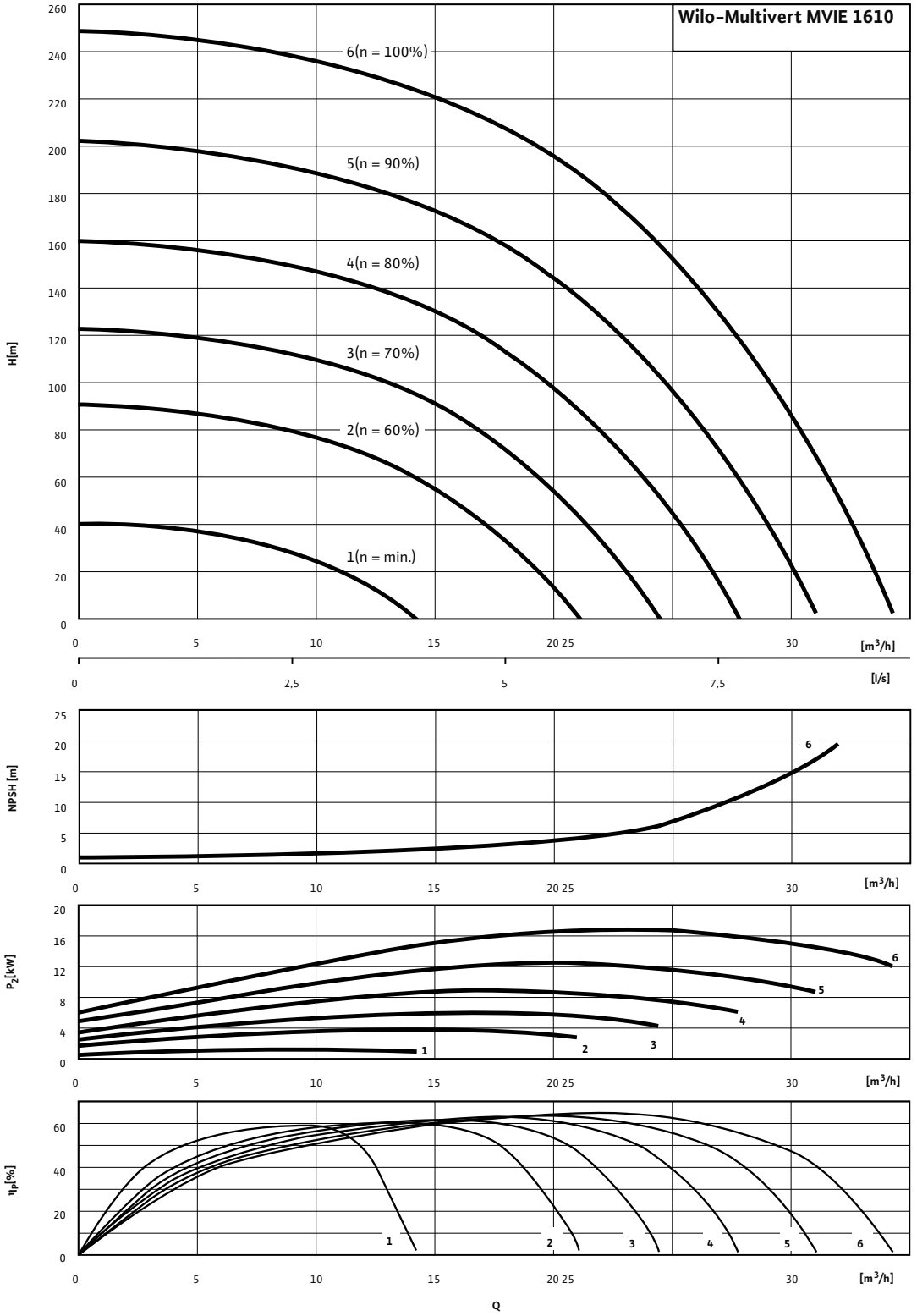

Pump curves in accordance with ISO 9906, class 2

Pump curves Wilo-Multivert MVIE

Wilo-Multivert MVIE 3202

Minimum Efficiency Index (MEI): ≥ 0.1

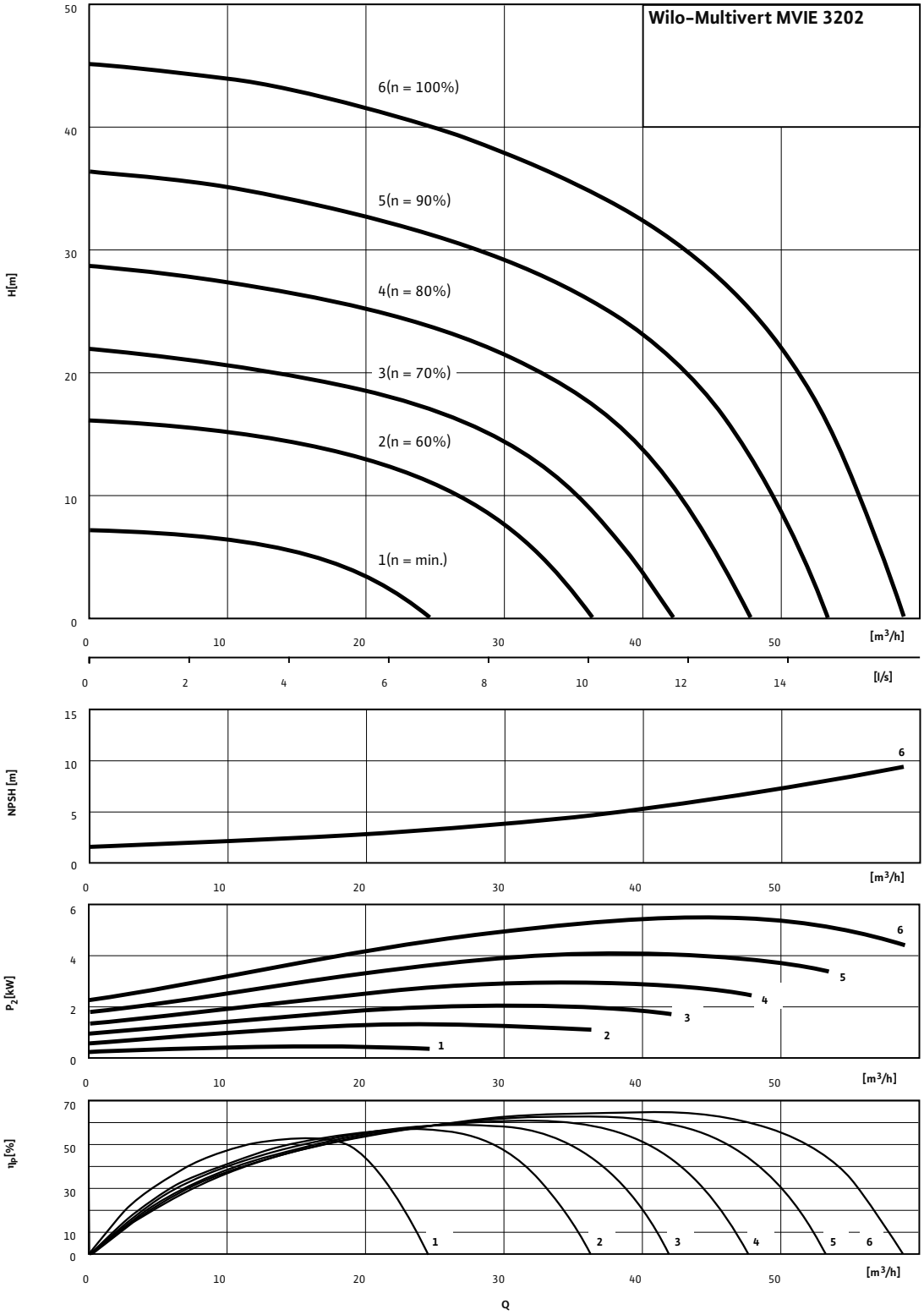

Pump curves in accordance with ISO 9906, class 2

Pump curves Wilo-Multivert MVIE

Wilo-Multivert MVIE 3203-11

Minimum Efficiency Index (MEI): ≥ 0.1

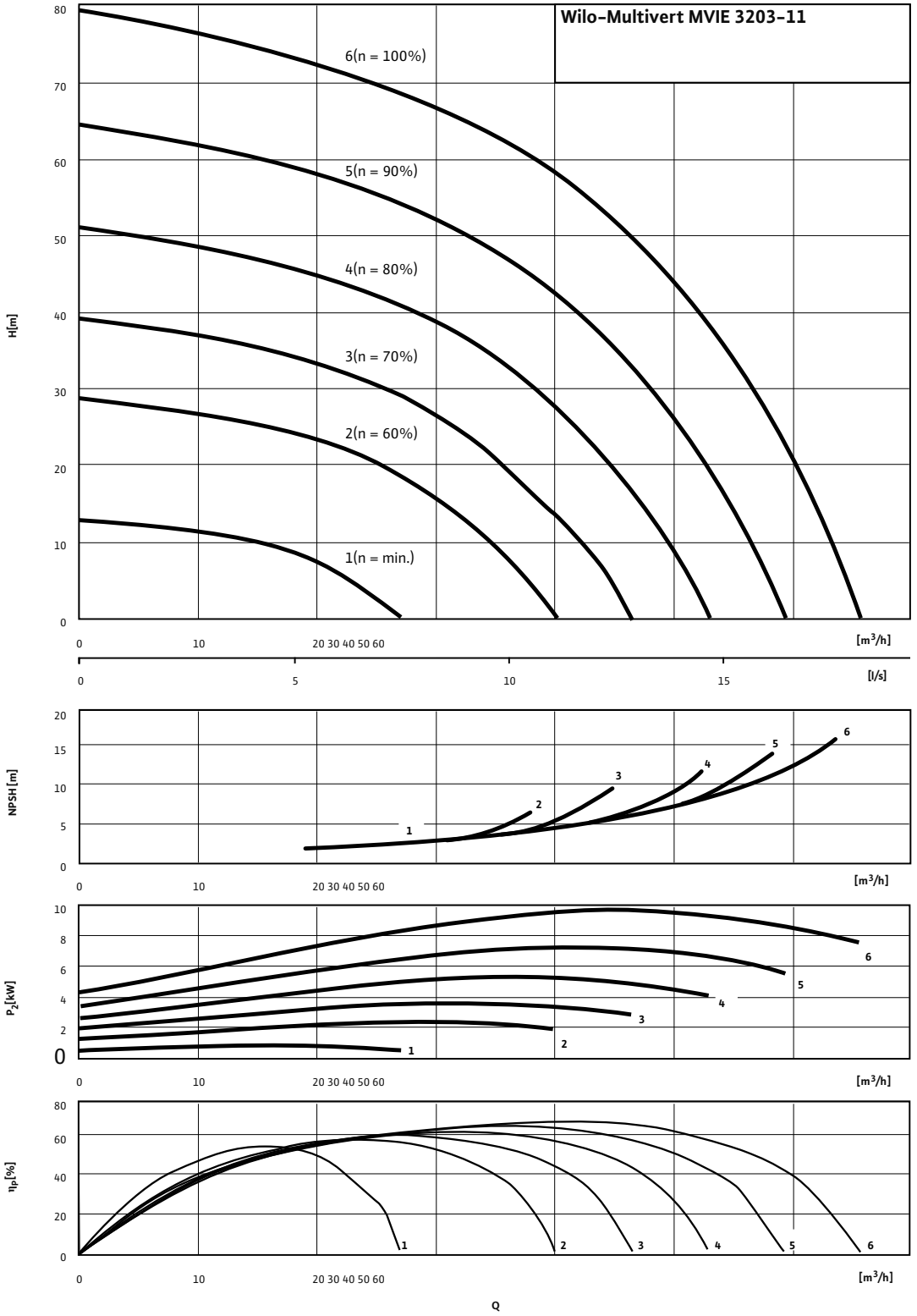

Pump curves in accordance with ISO 9906, class 2

Pump curves Wilo-Multivert MVIE

Wilo-Multivert MVIE 3203

Minimum Efficiency Index (MEI): ≥ 0.1

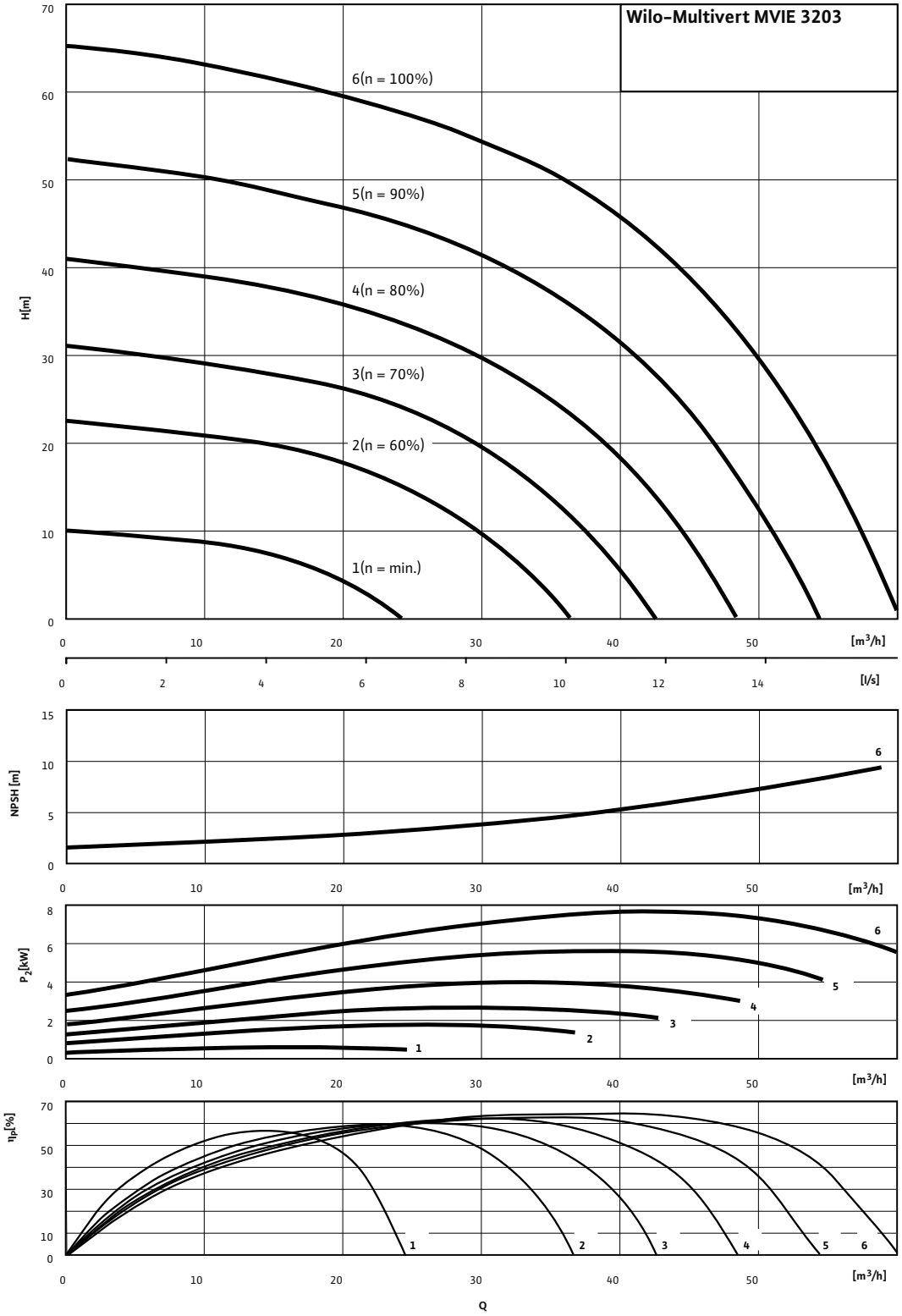

Pump curves in accordance with ISO 9906, class 2

Pump curves Wilo-Multivert MVIE

Wilo-Multivert MVIE 3204

Minimum Efficiency Index (MEI): ≥ 0.1

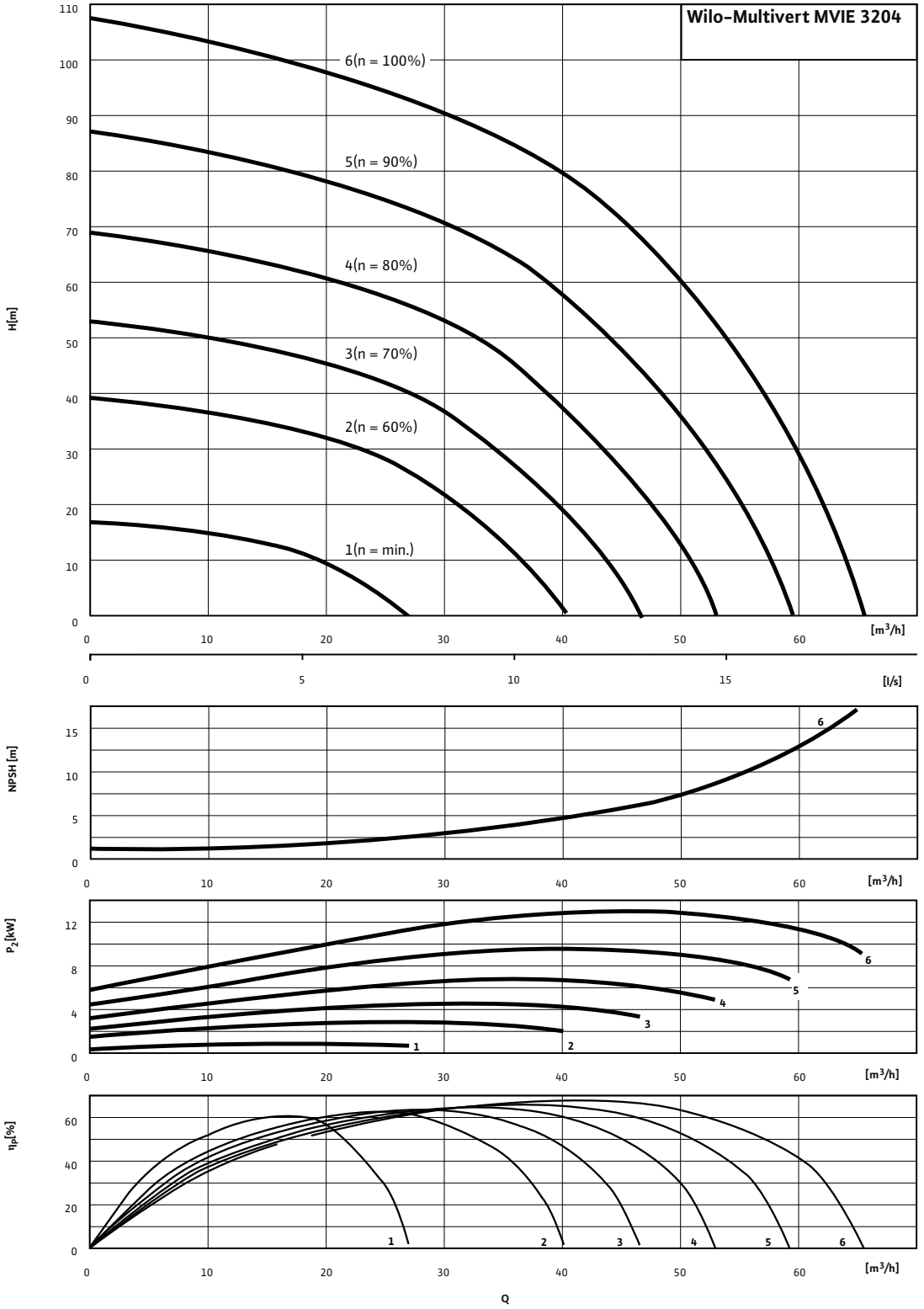

Pump curves in accordance with ISO 9906, class 2

Pump curves Wilo-Multivert MVIE

Wilo-Multivert MVIE 3205

Minimum Efficiency Index (MEI): ≥ 0.1

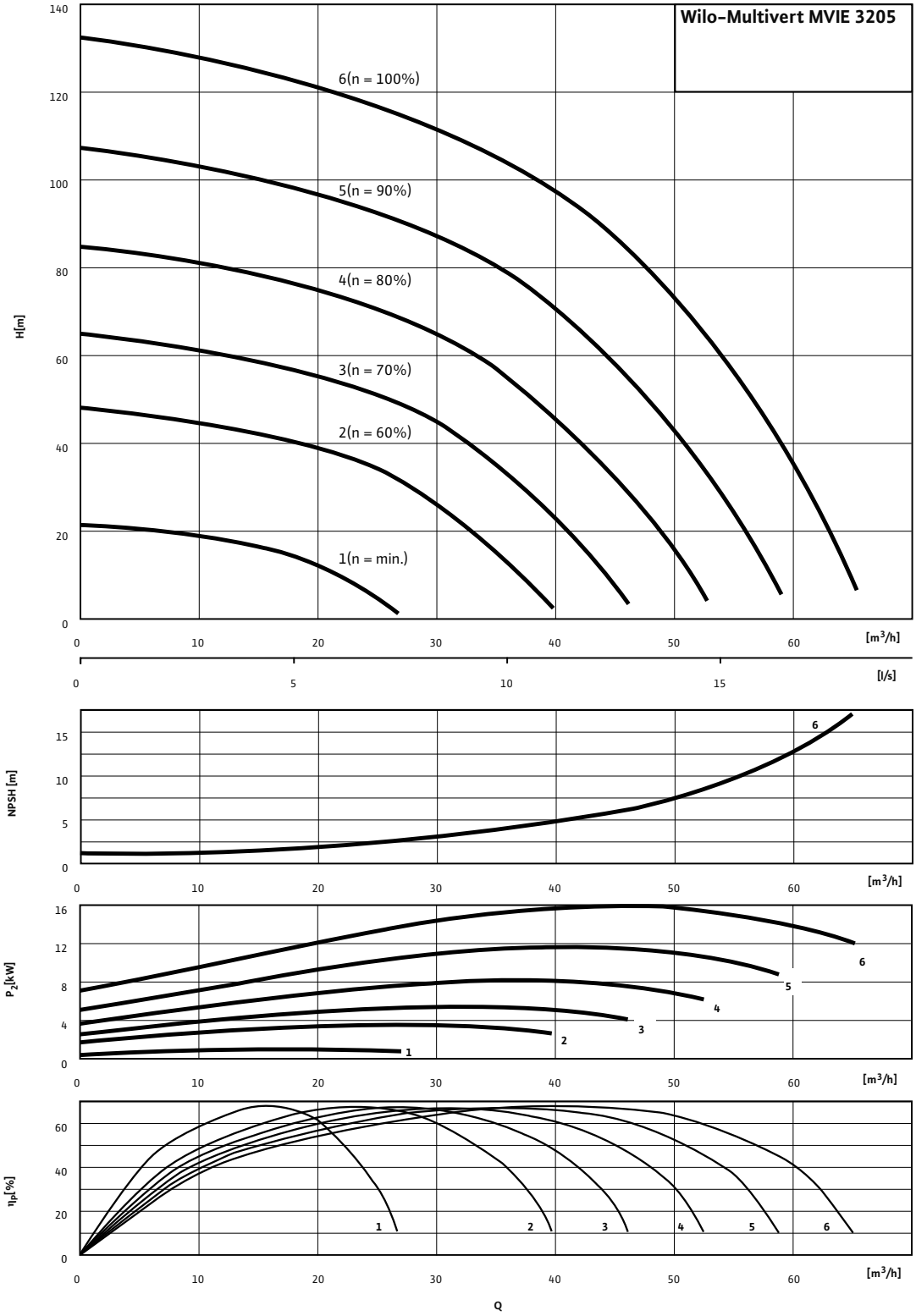

Pump curves in accordance with ISO 9906, class 2

Pump curves Wilo-Multivert MVIE

Wilo-Multivert MVIE 3206

Minimum Efficiency Index (MEI): ≥ 0.1

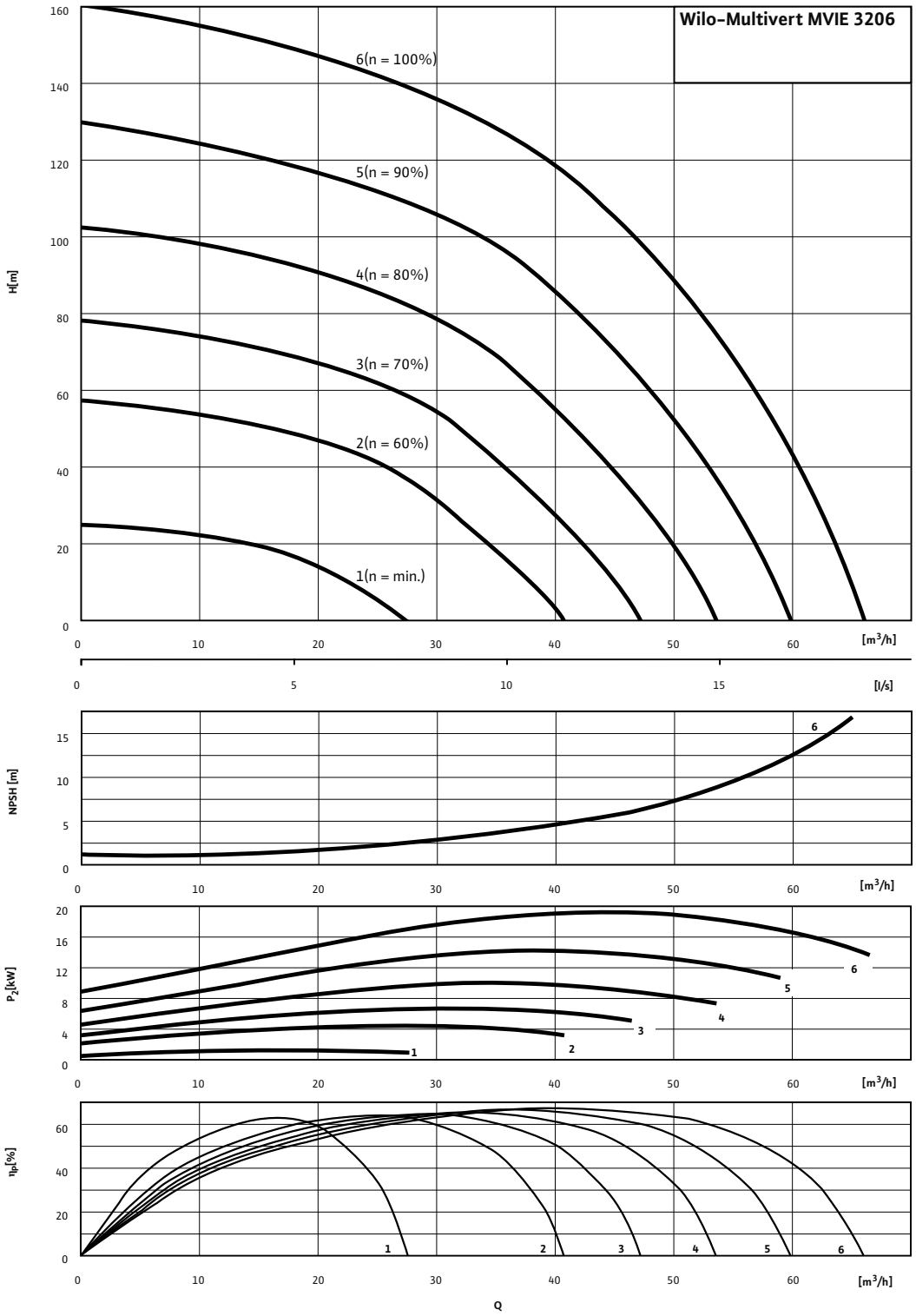

Pump curves in accordance with ISO 9906, class 2

Pump curves Wilo-Multivert MVIE

Wilo-Multivert MVIE 3207

Minimum Efficiency Index (MEI): ≥ 0.1

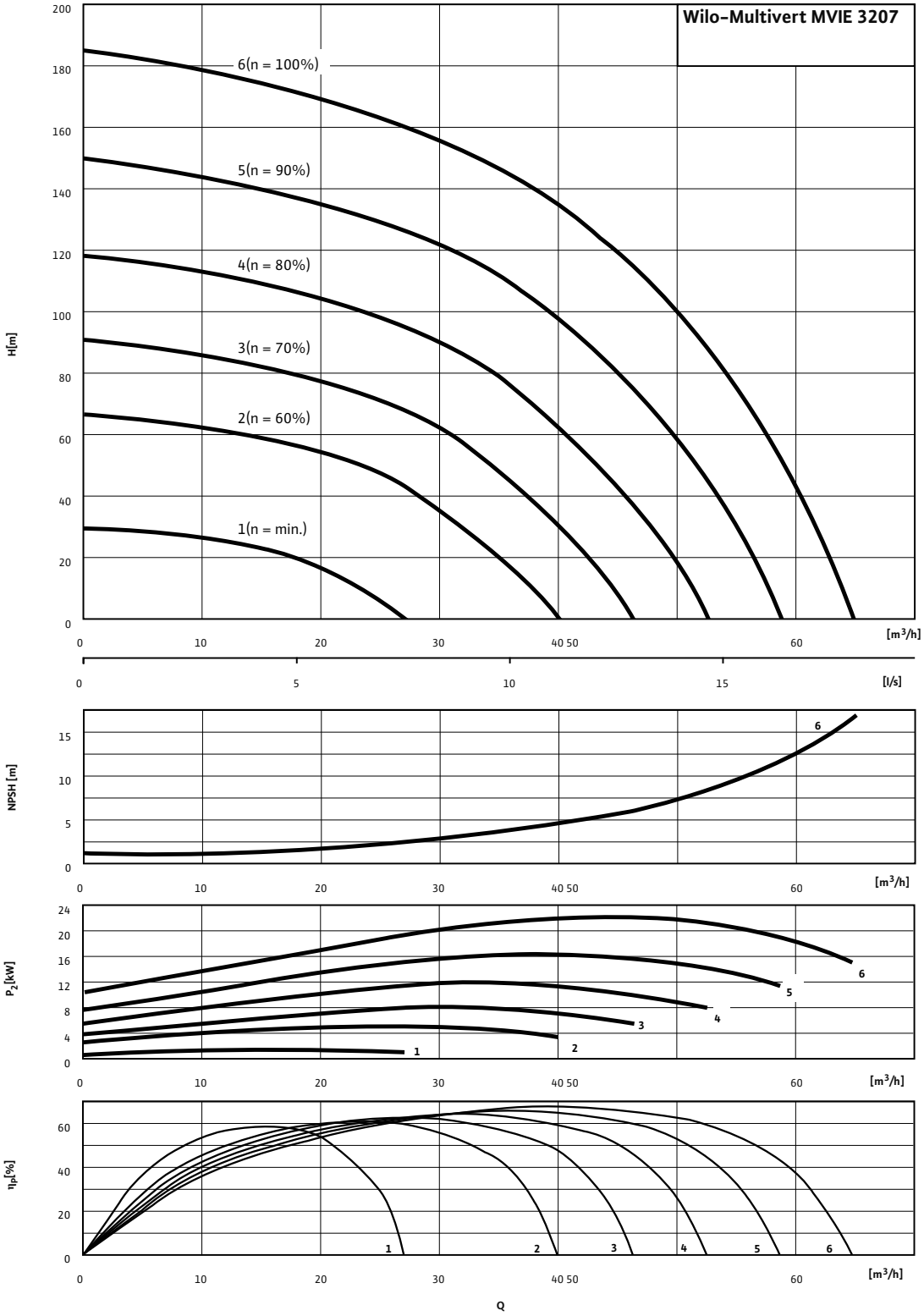

Pump curves in accordance with ISO 9906, class 2

Pump curves Wilo-Multivert MVIE

Wilo-Multivert MVIE 5202

Minimum Efficiency Index (MEI): ≥ 0.1

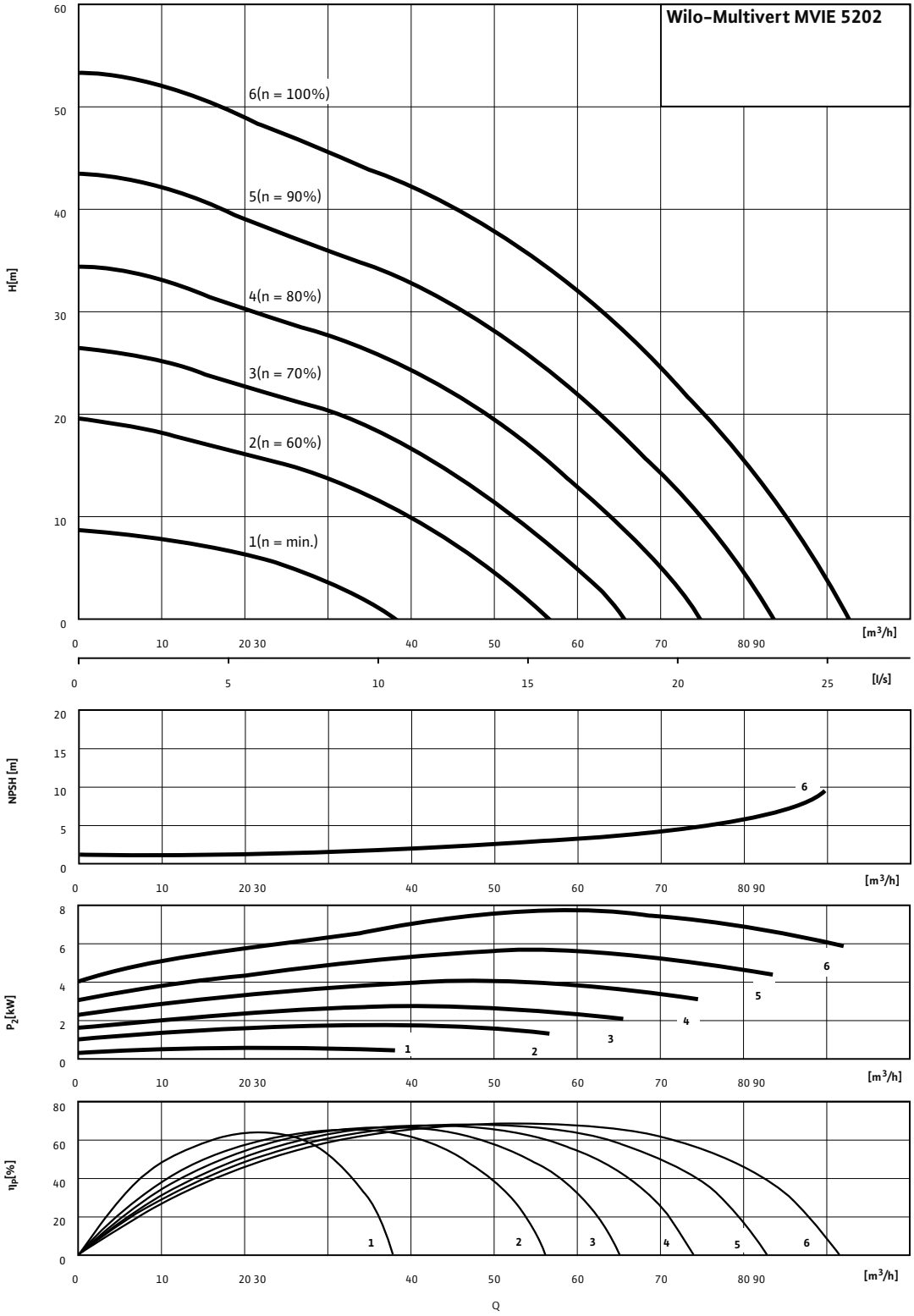

Pump curves in accordance with ISO 9906, class 2

Pump curves Wilo-Multivert MVIE

Wilo-Multivert MVIE 5203

Minimum Efficiency Index (MEI): ≥ 0.1

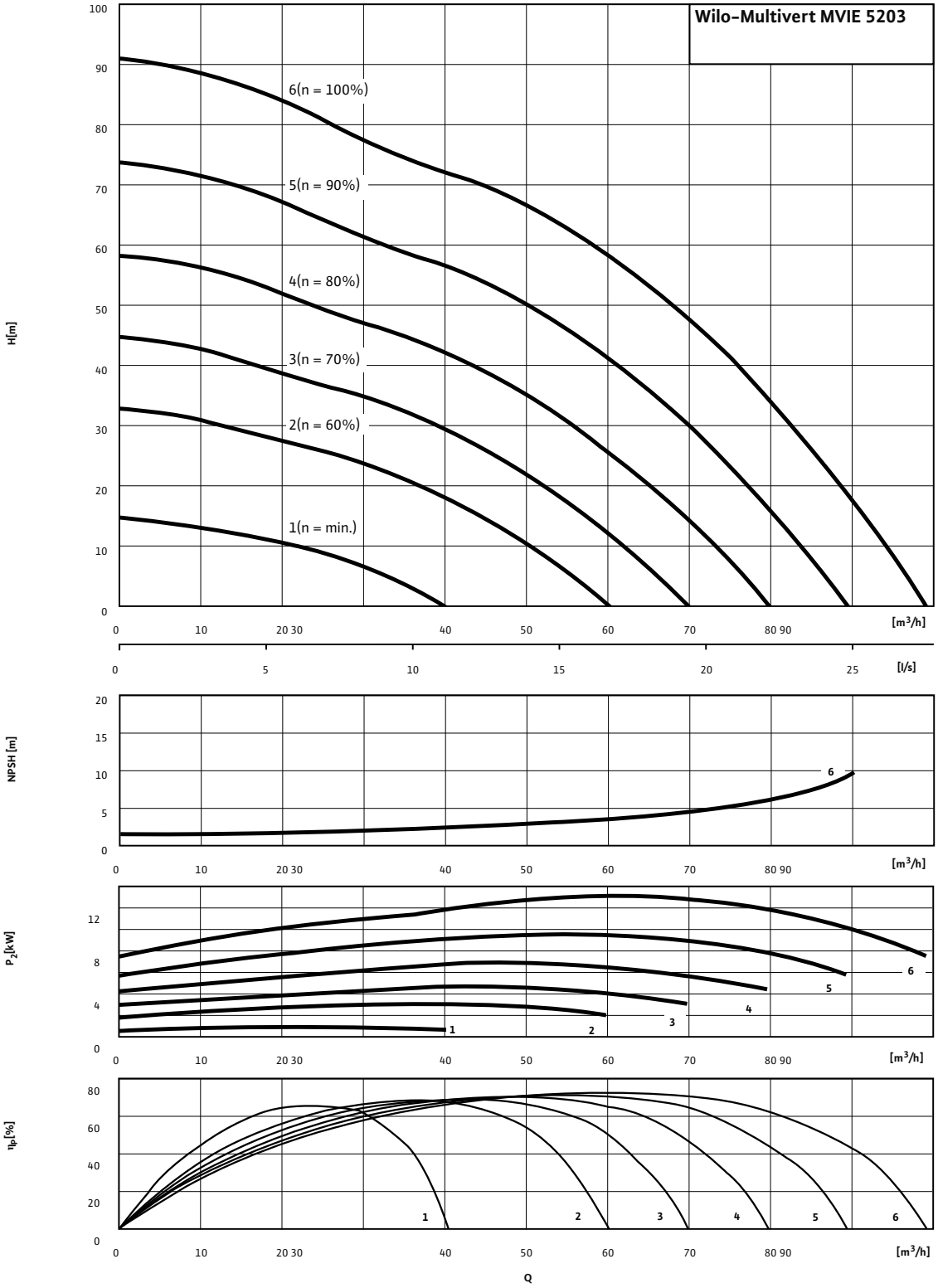

Pump curves in accordance with ISO 9906, class 2

Pump curves Wilo-Multivert MVIE

Wilo-Multivert MVIE 5204

Minimum Efficiency Index (MEI): ≥ 0.1

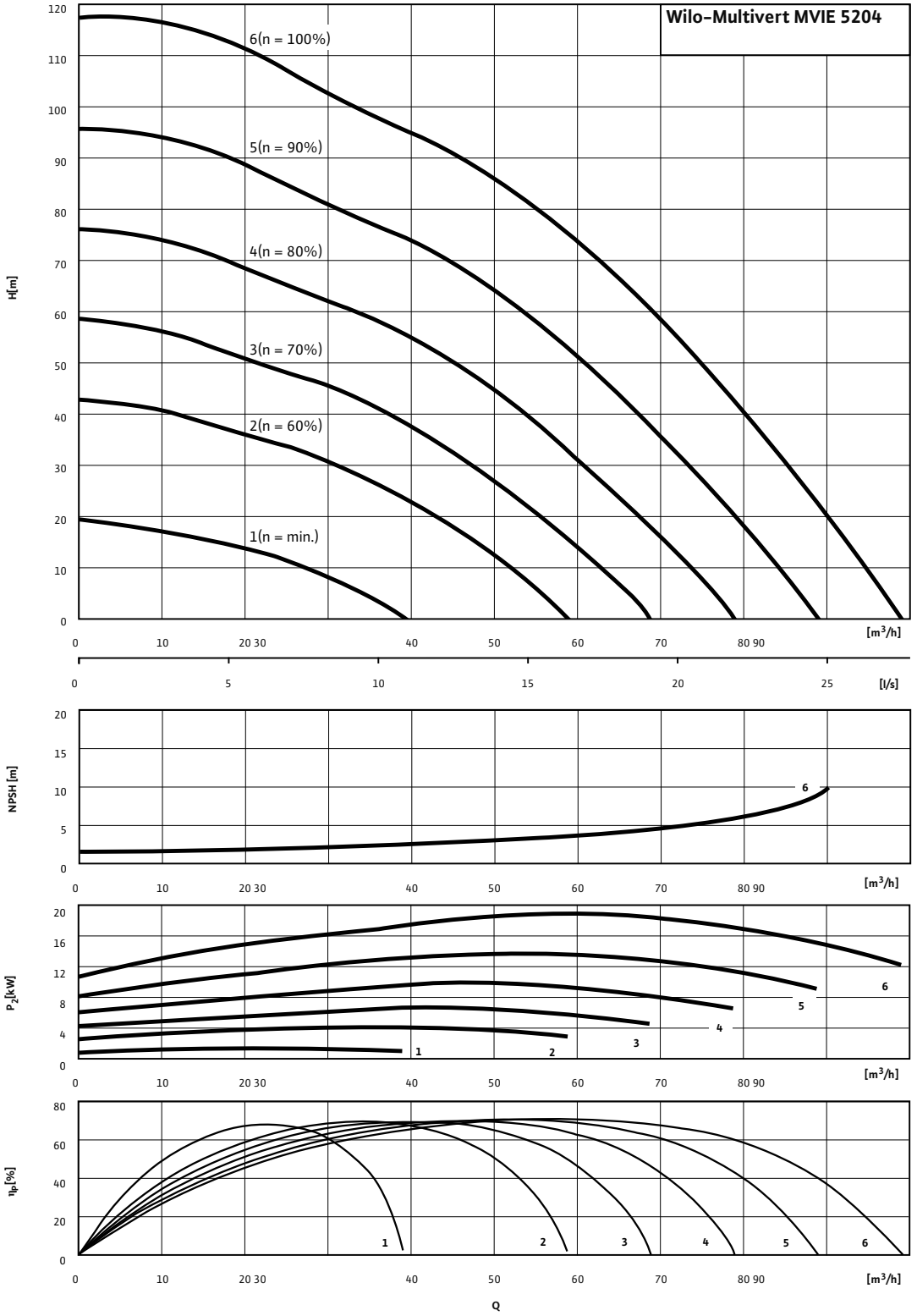

Pump curves in accordance with ISO 9906, class 2

Pump curves Wilo-Multivert MVIE

Wilo-Multivert MVIE 5205

Minimum Efficiency Index (MEI): ≥ 0.1

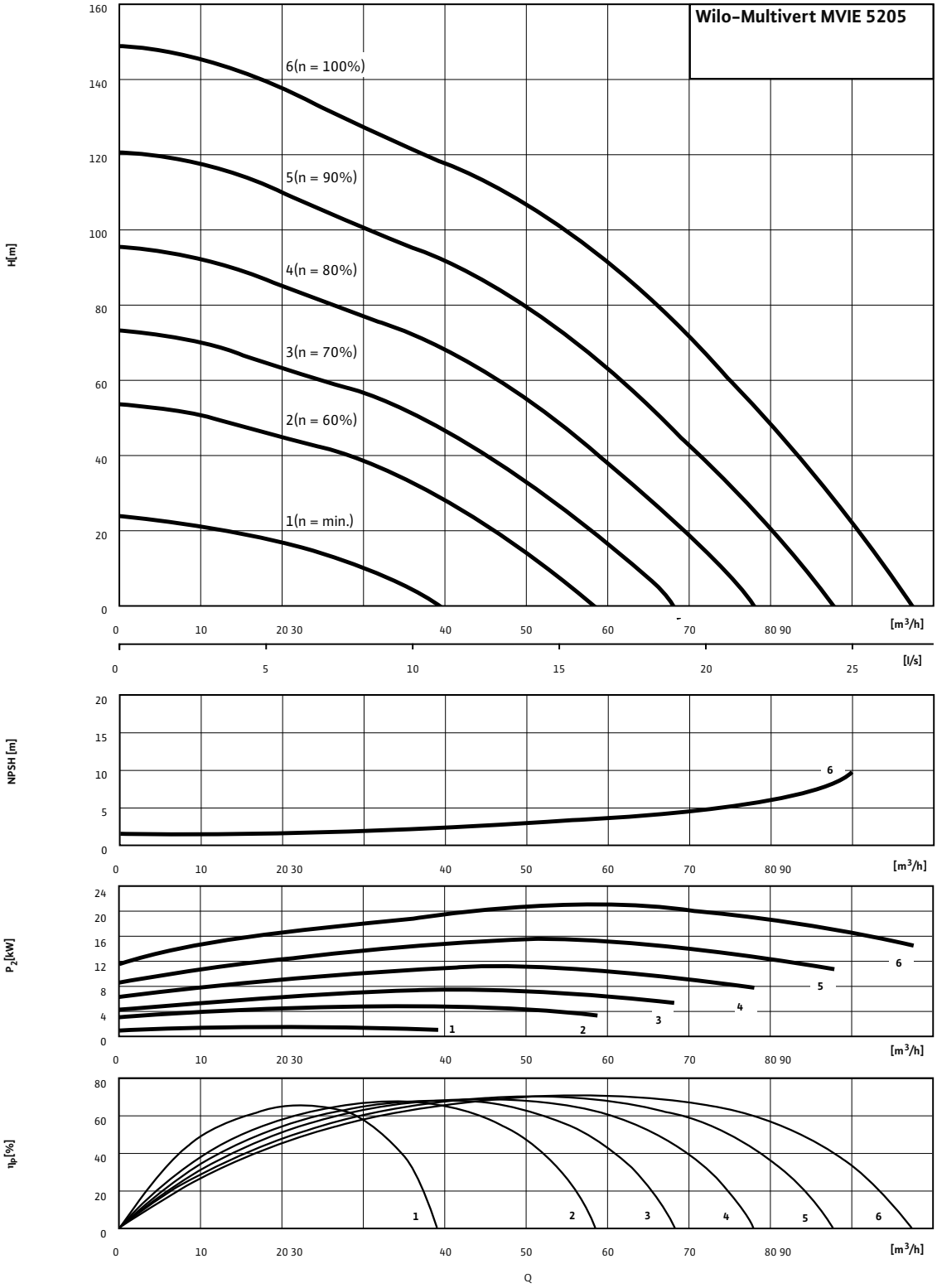

Pump curves in accordance with ISO 9906, class 2

Pump curves Wilo-Multivert MVIE

Wilo-Multivert MVIE 7002

Minimum Efficiency Index (MEI): ≥ 0.1

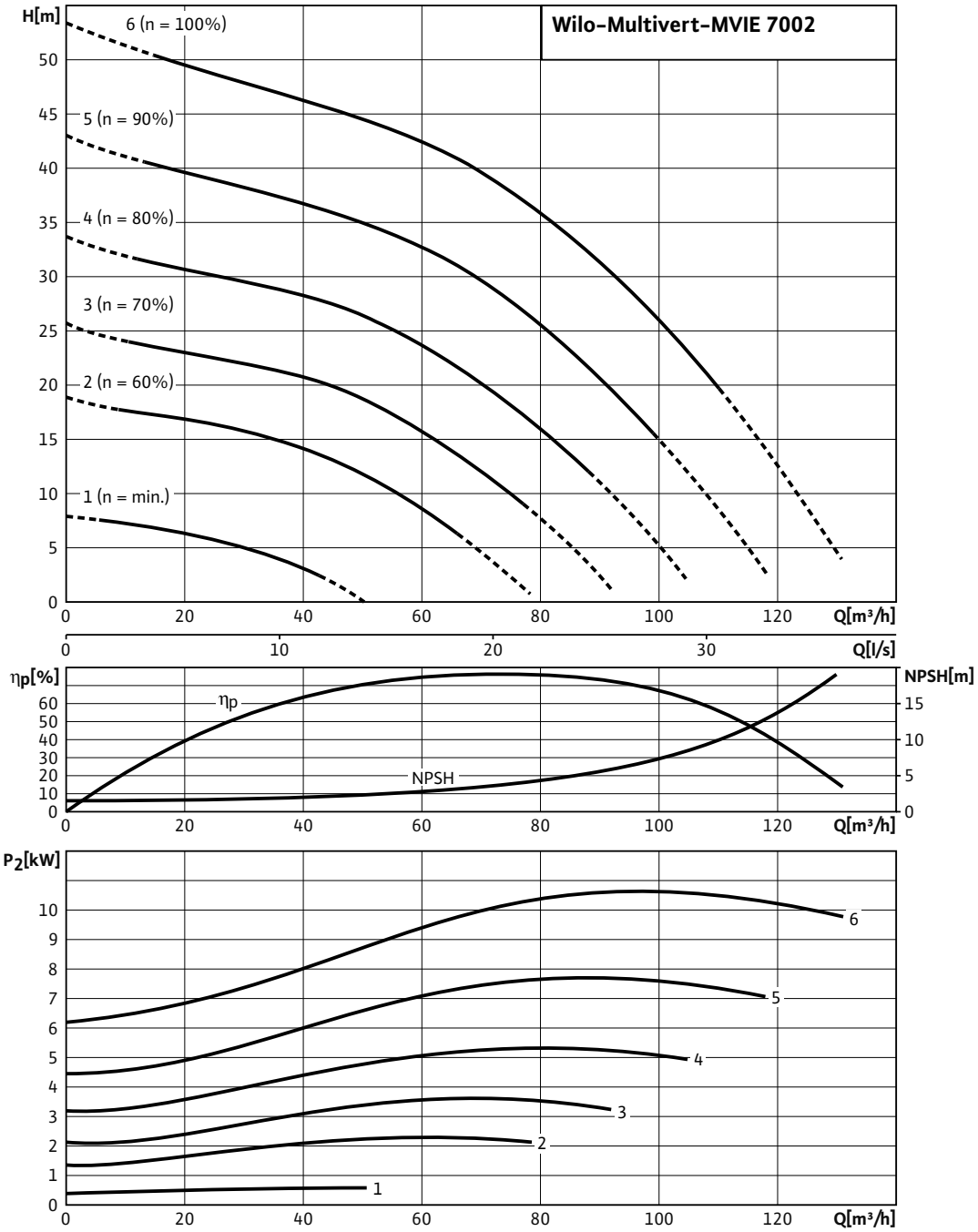

Pump curves in accordance with ISO 9906, class 2

Pump curves Wilo-Multivert MVIE

Wilo-Multivert MVIE 7003/1

Minimum Efficiency Index (MEI): ≥ 0.1

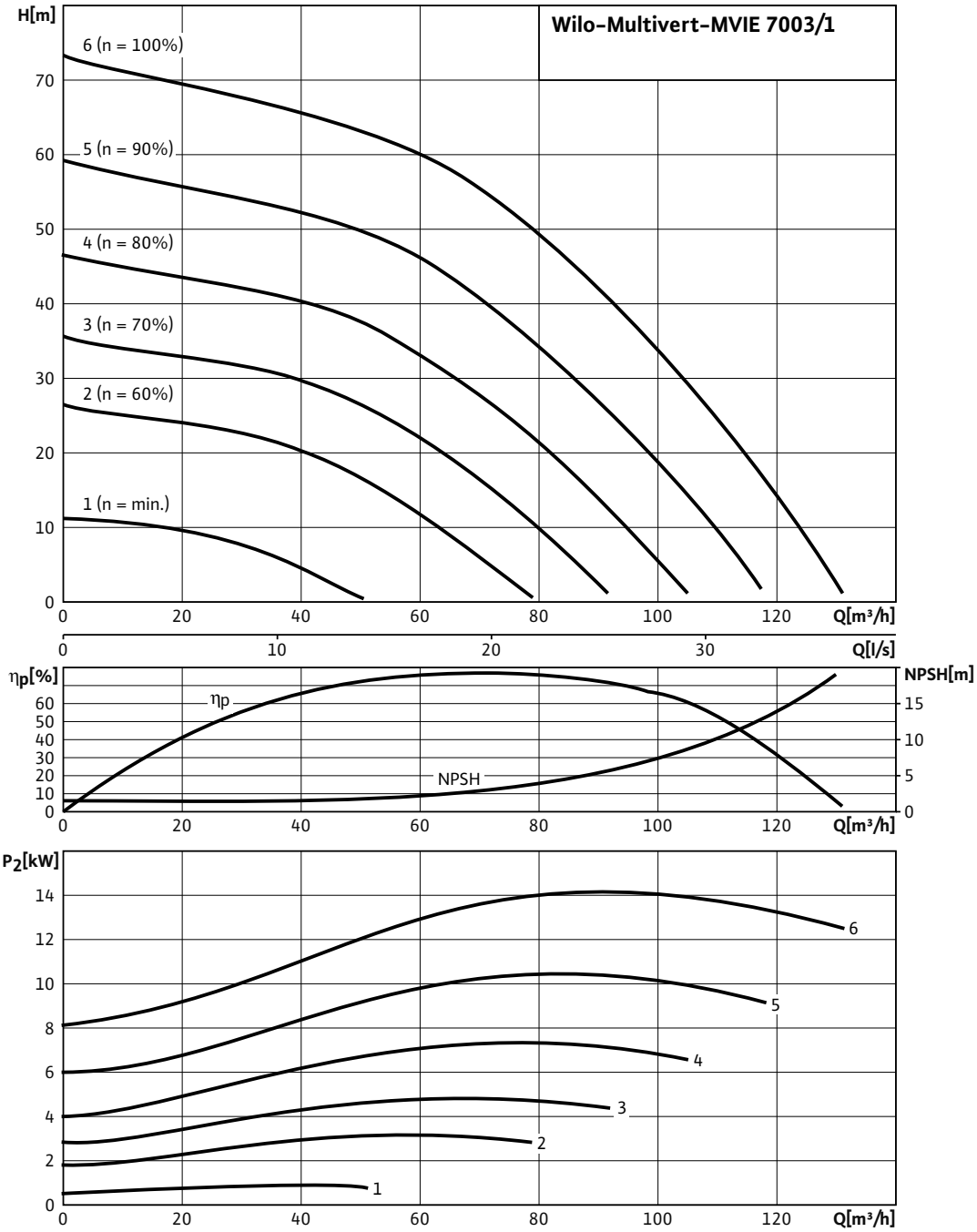

Pump curves in accordance with ISO 9906, class 2

Pump curves Wilo-Multivert MVIE

Wilo-Multivert MVIE 7004

Minimum Efficiency Index (MEI): ≥ 0.1

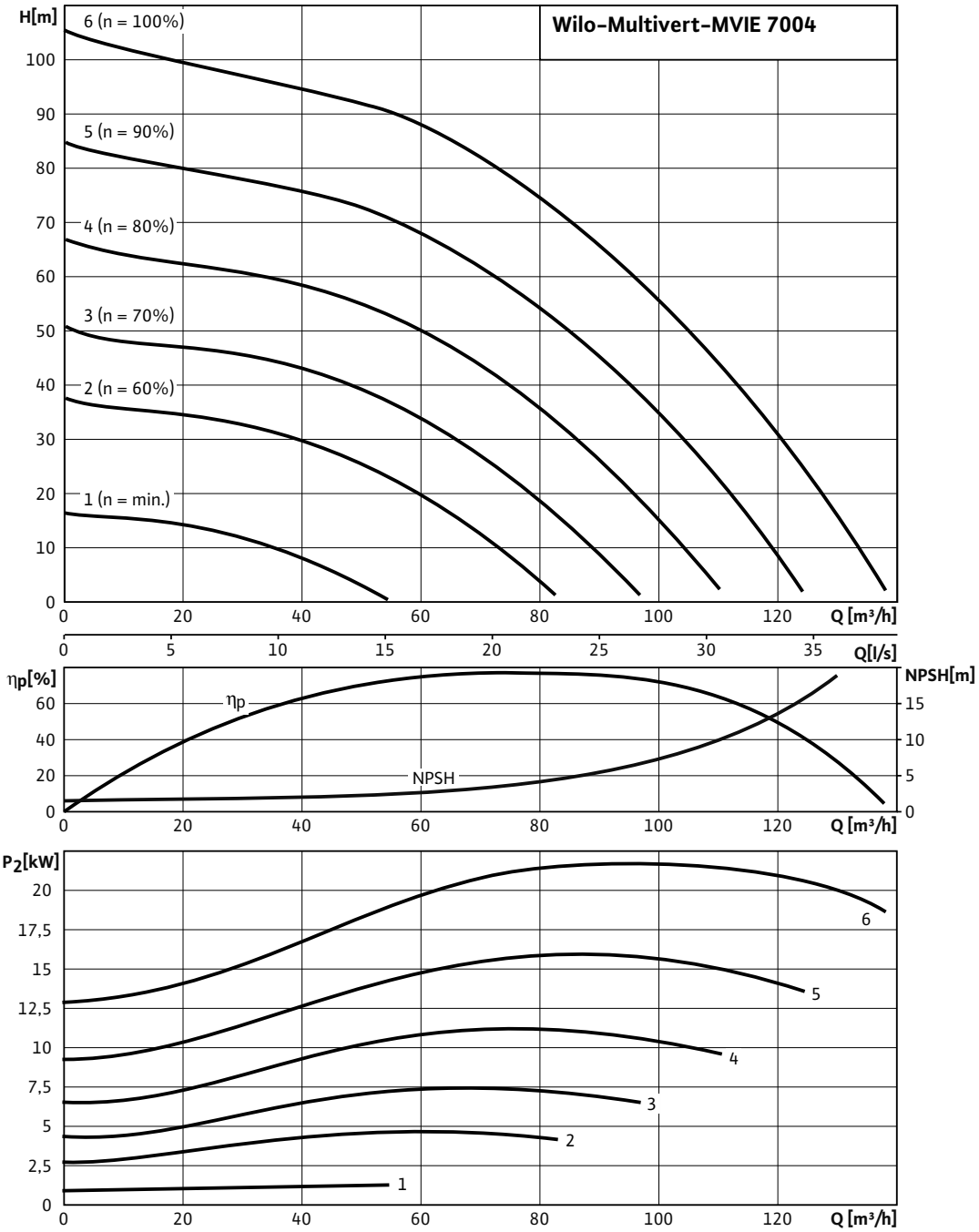

Pump curves in accordance with ISO 9906, class 2

Pump curves Wilo-Multivert MVIE

Wilo-Multivert MVIE 7004/2

Minimum Efficiency Index (MEI): ≥ 0.1

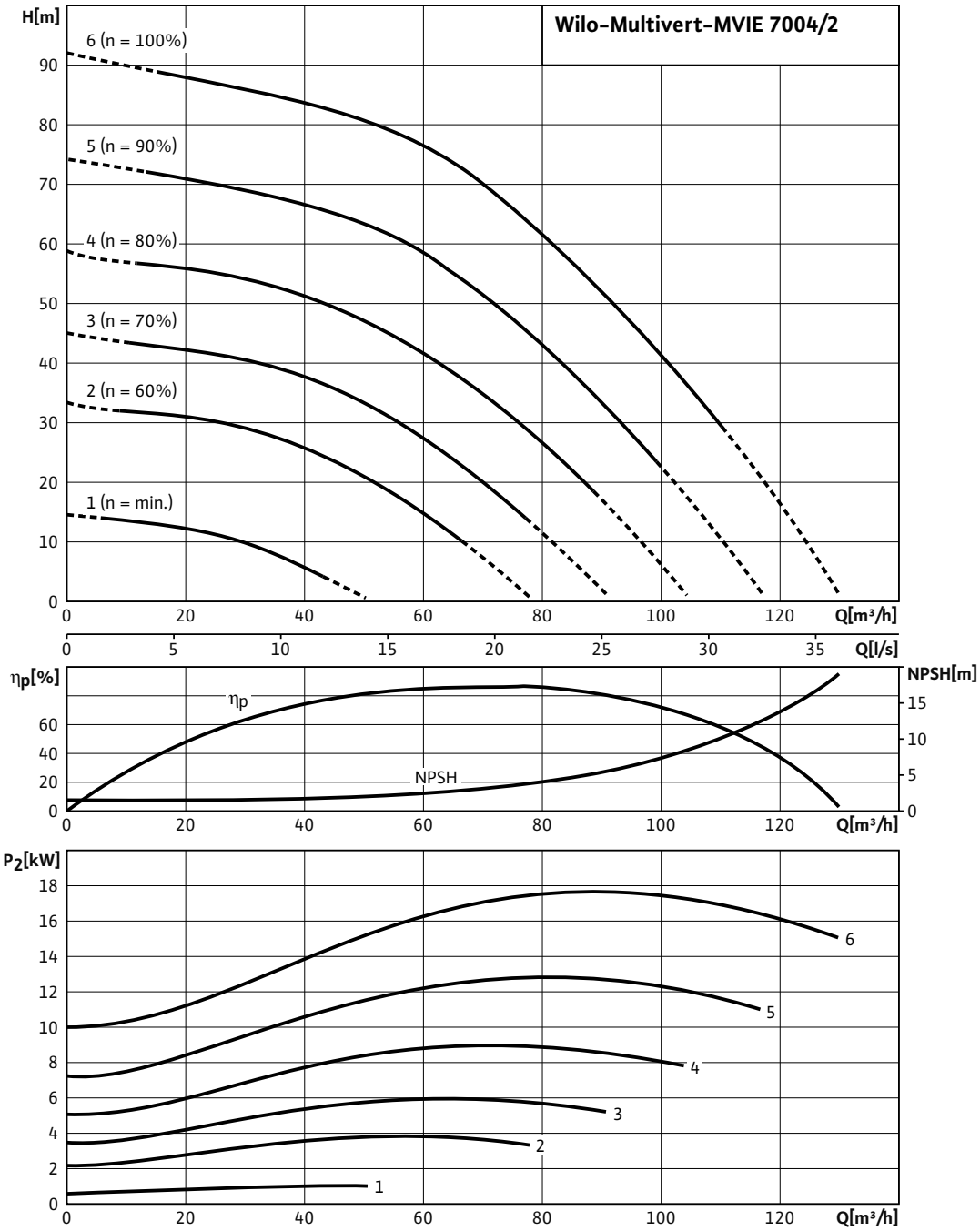

Pump curves in accordance with ISO 9906, class 2

Pump curves Wilo-Multivert MVIE

Wilo-Multivert MVIE 9501

Minimum Efficiency Index (MEI): ≥ 0.1

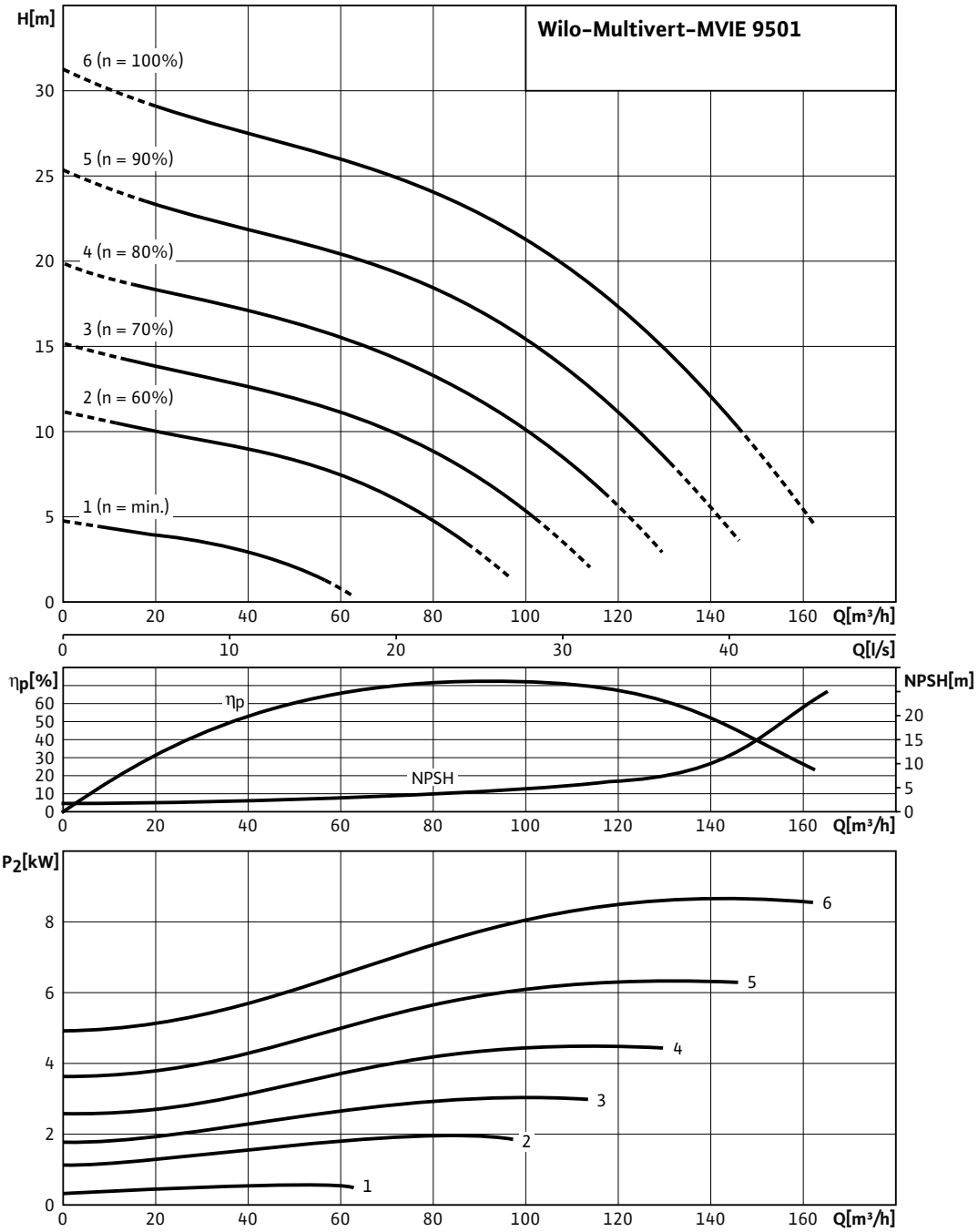

Pump curves in accordance with ISO 9906, class 2

Pump curves Wilo-Multivert MVIE

Wilo-Multivert MVIE 9502

Minimum Efficiency Index (MEI): ≥ 0.1

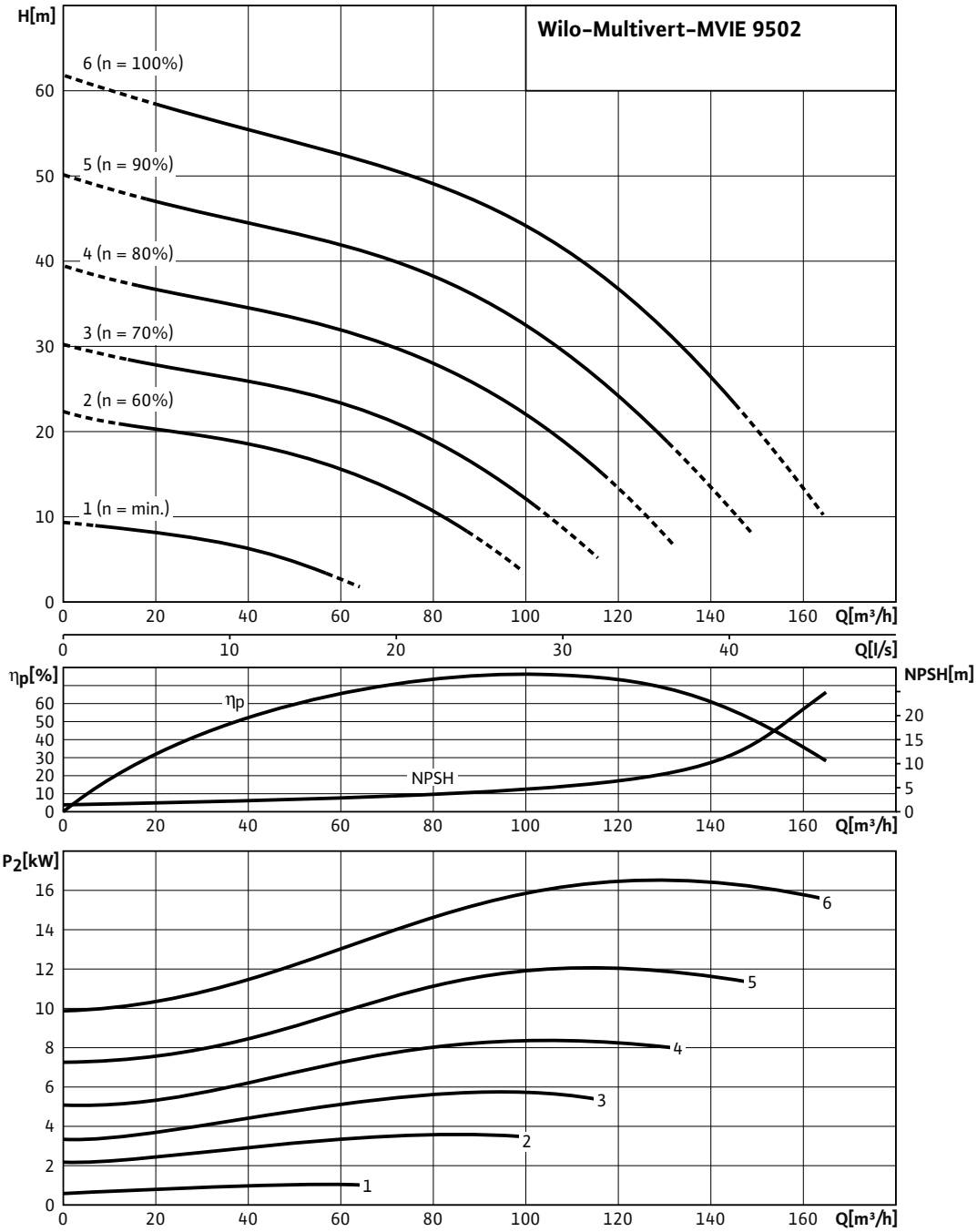

Pump curves in accordance with ISO 9906, class 2

Pump curves Wilo-Multivert MVIE

Wilo-Multivert MVIE 9502/1

Minimum Efficiency Index (MEI): ≥ 0.1

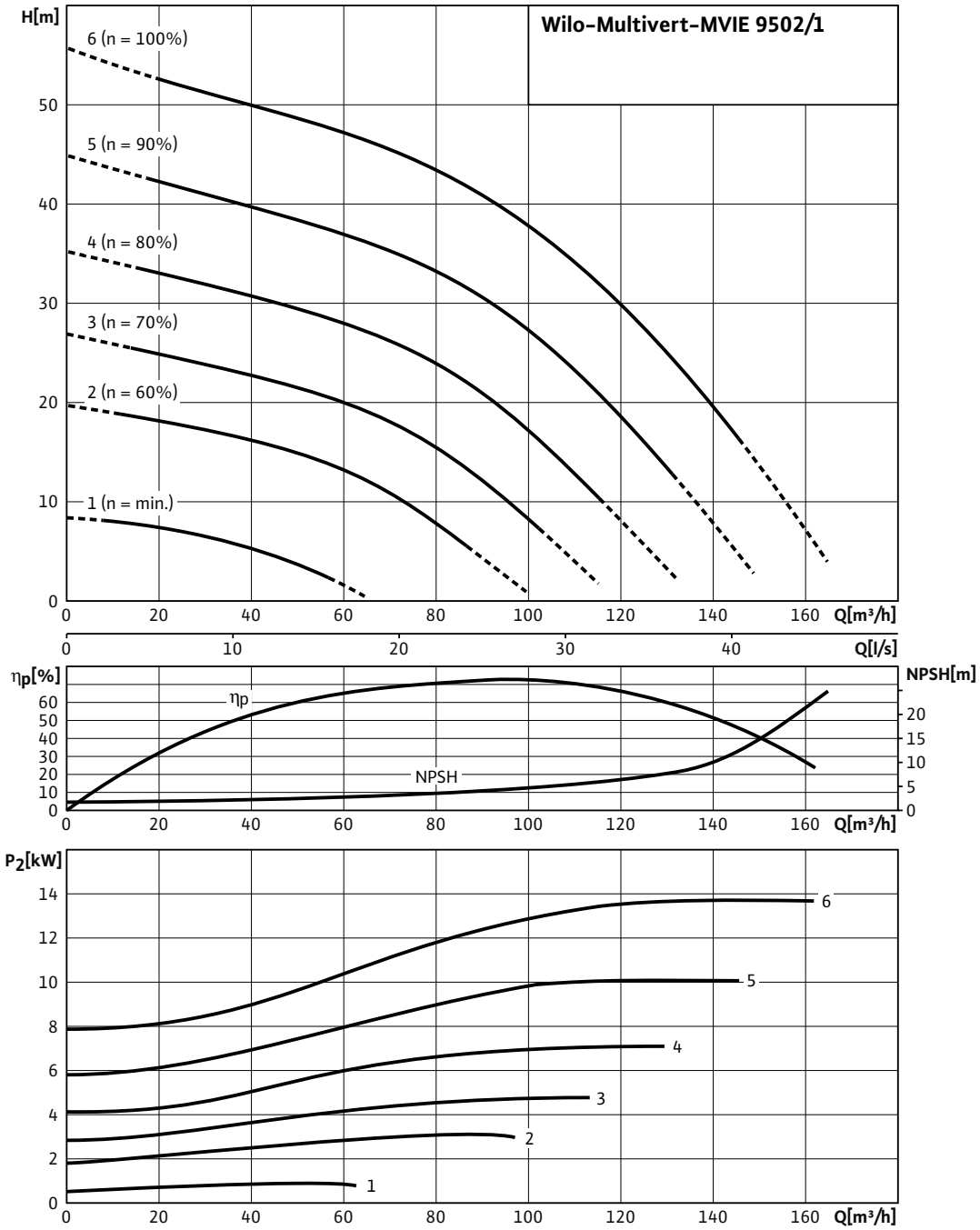

Pump curves in accordance with ISO 9906, class 2

Pump curves Wilo-Multivert MVIE

Wilo-Multivert MVIE 9503/2

Minimum Efficiency Index (MEI): ≥ 0.1

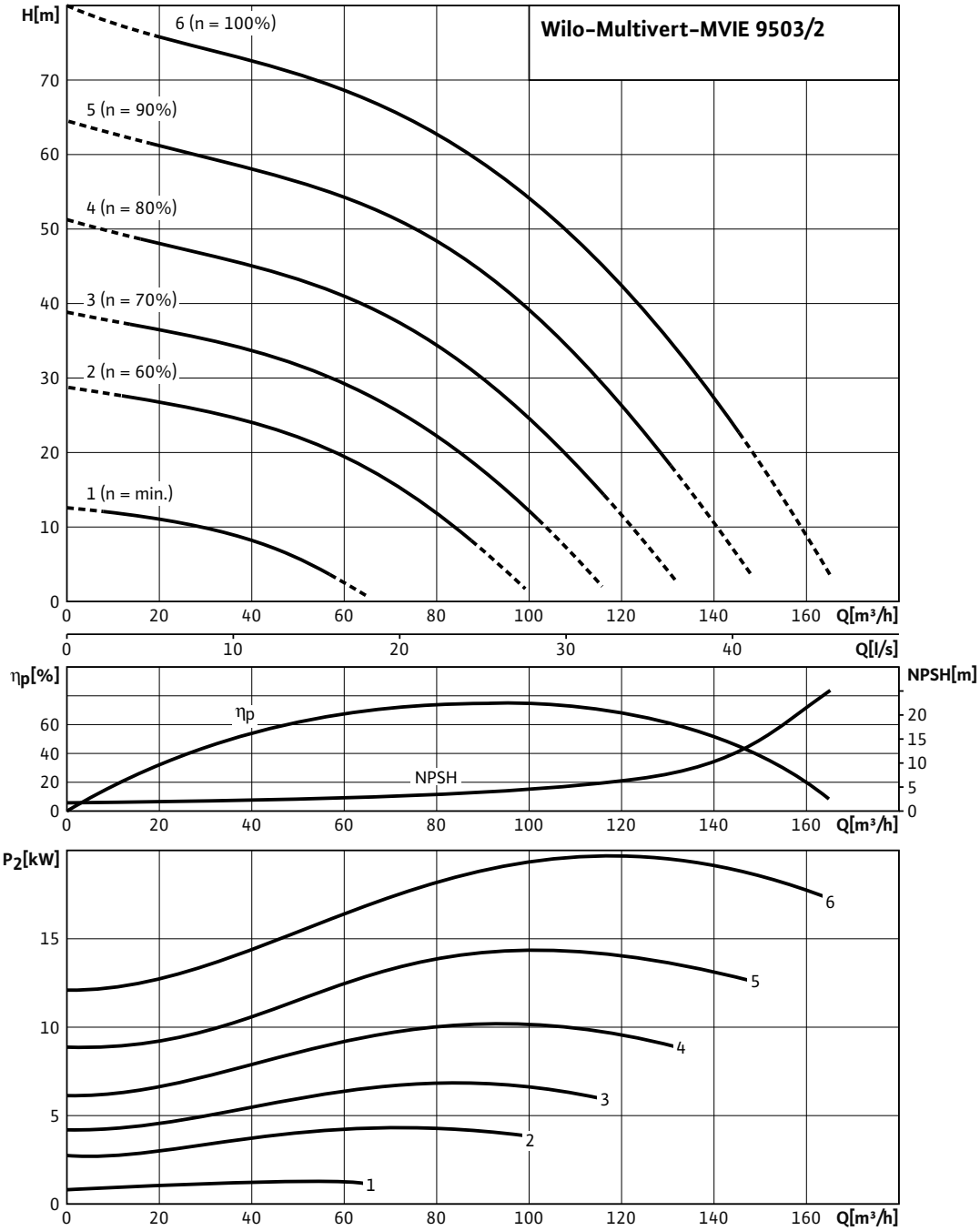

Pump curves in accordance with ISO 9906, class 2

Terminal diagram, motor data Wilo-Multivert MVIE

Electrical connection

1~230 V

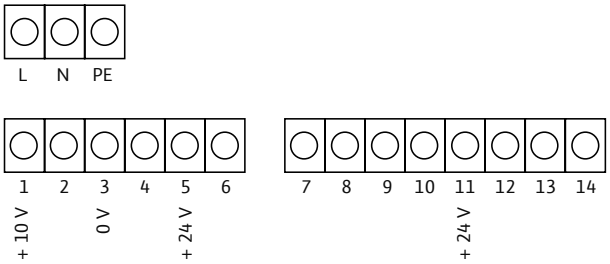

Electrical connection

3~400 V ≤7.5 kW

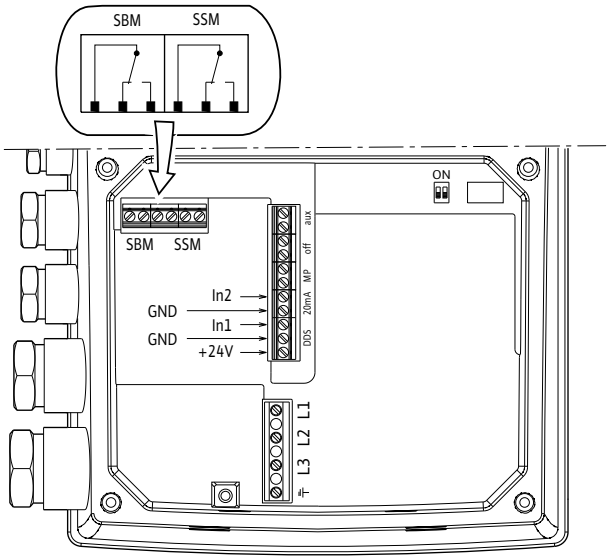

Electrical connection

3~400 V ≥11 kW

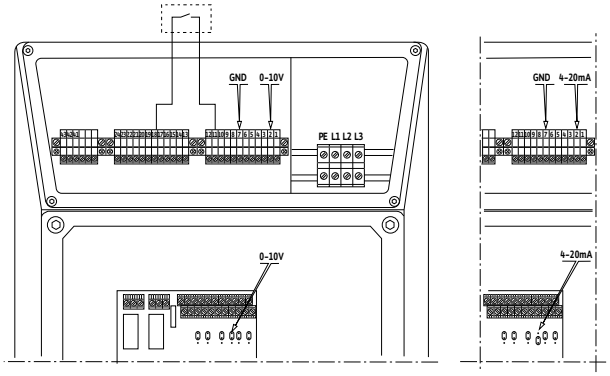

Terminal diagram, motor data Wilo-Multivert MVIE

Motor data 1~230 V, 50 Hz				
Wilo-Multivert...	**Mains connection**	**Nominal power**	**Nominal motor power**	**Nominal current**
		P_1	P_2	I_N
		kW		A
MVIE 204 M1, M3	1~230 V, 50/60 Hz	1.60	1.10	12.7
MVIE 403 M1, M3	1~230 V, 50/60 Hz	1.60	1.10	12.7

Motor data 3~400 V, 50 Hz				
Wilo-Multivert...	**Mains connection**	**Nominal power**	**Nominal motor power**	**Nominal current**
		P_1	P_2	I_N
		kW		A
MVIE 204	3~400 V, 50/60 Hz	1.50	1.10	3.2
MVIE 208	3~400 V, 50/60 Hz	2.80	2.20	6.1
MVIE 214	3~400 V, 50/60 Hz	4.80	4.00	9.8
MVIE 403	3~400 V, 50/60 Hz	1.50	1.10	3.2
MVIE 406	3~400 V, 50/60 Hz	2.90	2.20	6.2
MVIE 410	3~400 V, 50/60 Hz	4.80	4.00	9.7
MVIE 803	3~400 V, 50/60 Hz	2.60	2.20	5.7
MVIE 806	3~400 V, 50/60 Hz	5.00	4.00	10.1
MVIE 808	3~400 V, 50/60 Hz	6.70	5.50	10.8
MVIE 811	3~400 V, 50/60 Hz	8.90	7.50	14.8
MVIE 1606	3~400 V, 50/60 Hz	12.70	11.00	–
MVIE 1608	3~400 V, 50/60 Hz	16.90	15.00	–
MVIE 1610	3~400 V, 50/60 Hz	21.30	18.50	31.9
MVIE 3202	3~400 V, 50/60 Hz	6.30	5.50	10.8
MVIE 3203	3~400 V, 50/60 Hz	8.70	7.50	14.8
MVIE 3203	3~400 V, 50/60 Hz	12.70	11.00	–
MVIE 3204	3~400 V, 50/60 Hz	16.90	15.00	–
MVIE 3205	3~400 V, 50/60 Hz	21.30	18.50	30.3
MVIE 3206	3~400 V, 50/60 Hz	25.50	22.00	–
MVIE 3207	3~400 V, 50/60 Hz	25.50	22.00	–
MVIE 5202	3~400 V, 50/60 Hz	8.70	7.50	14.8
MVIE 5203	3~400 V, 50/60 Hz	16.90	15.00	–
MVIE 5204	3~400 V, 50/60 Hz	21.30	18.50	32.7
MVIE 5205	3~400 V, 50/60 Hz	25.50	22.00	–
MVIE 7002	3~400 V, 50/60 Hz	12.70	11.00	–
MVIE 7003/1	3~400 V, 50/60 Hz	16.90	15.00	–
MVIE 7004/2	3~400 V, 50/60 Hz	21.30	18.50	32.2
MVIE 7004	3~400 V, 50/60 Hz	25.50	22.00	–
MVIE 9501	3~400 V, 50/60 Hz	12.70	11.00	–
MVIE 9502/2	3~400 V, 50/60 Hz	16.90	15.00	–
MVIE 9502	3~400 V, 50/60 Hz	21.30	18.50	30.1
MVIE 9503/2	3~400 V, 50/60 Hz	25.50	22.00	–

Dimensions, weights Wilo-Multivert MVIE

Dimension drawing

Wilo-Multivert MVIE ≤7.5 kW

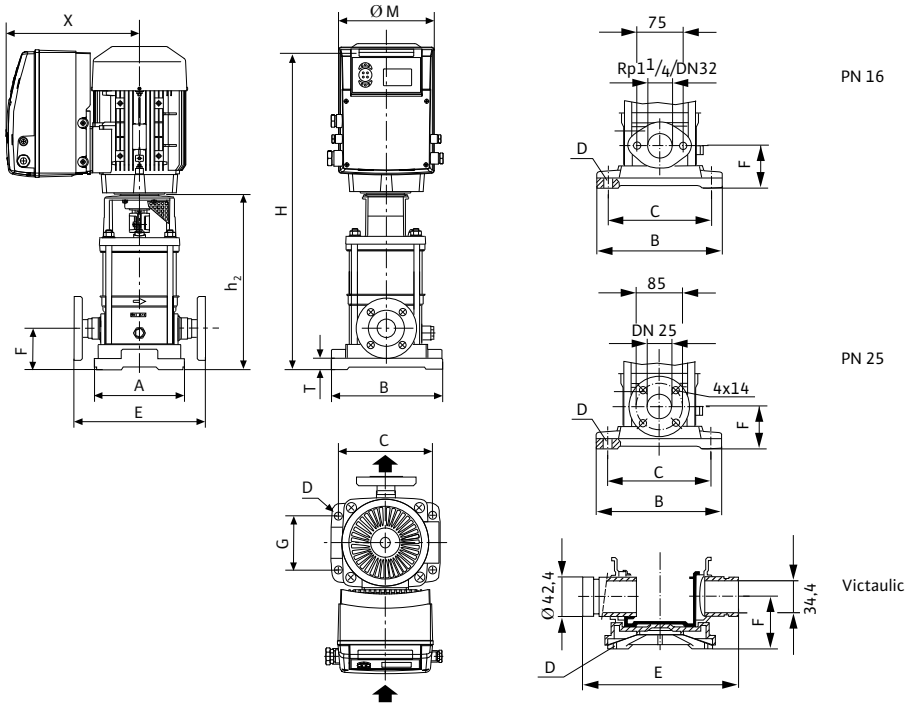

Dimension drawing

Wilo-Multivert MVIE ≥11 kW

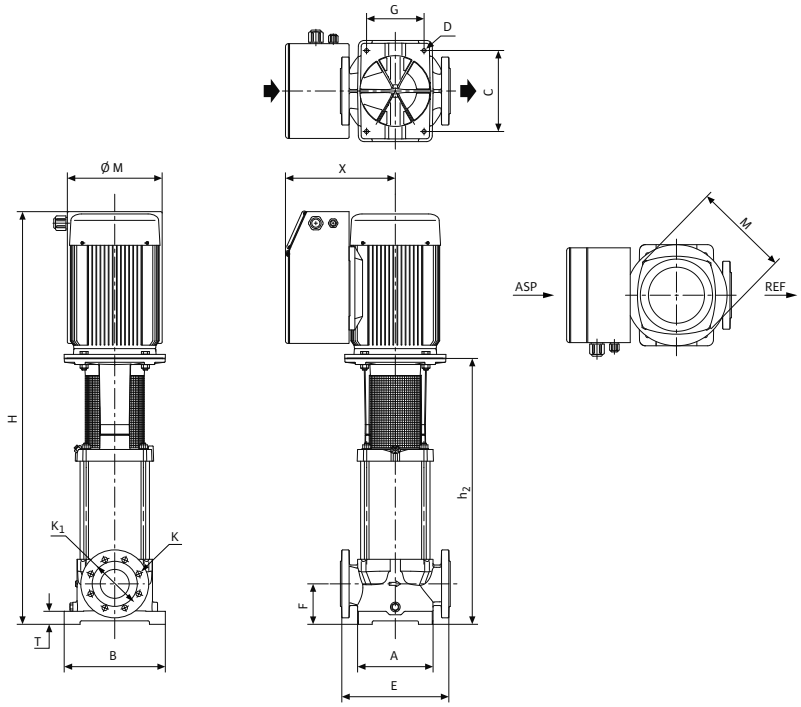

Dimensions, weights Wilo-Multivert MVIE

Dimensions, weights – Version PN 16

Wilo-Multivert...	Dimensions															Weight approx.
	A	*B*	*C*	*D*	*E*	*F*	*G*	*H*	h_2	K_1	*K*	*Rp/DN*	*Ø M*	*T*	*X*	*m*
	mm												mm			kg
MVIE 204 M1, M3	157	212	180	4x12	204	50	100	597.5	330.5	75	4x18	Rp 1"	170	20	205	25.5
MVIE 204	157	212	180	4x12	204	50	100	594.5	354.5	75	–	Rp 1"	155	20	237	25.3
MVIE 208	157	212	180	4x12	204	50	100	720.5	436.5	75	–	Rp 1"	170	20	254	37.2
MVIE 403 M1, M3	157	212	180	4x12	204	50	100	573.5	306.5	75	–	Rp 1¼"	170	20	205	25.0
MVIE 403	157	212	180	4x12	204	50	100	546.6	306.5	75	–	Rp 1¼"	155	20	237	25.3
MVIE 406	157	212	180	4x12	204	50	100	672.5	388.5	75	–	Rp 1¼"	170	20	254	36.5
MVIE 410	157	212	180	4x12	204	50	100	828.5	494.5	75	–	Rp 1¼"	220	20	284	53.3
MVIE 803	187	252	215	4x12	250	80	130	657.5	373.5	75	–	Rp 1½"	170	20	254	36.7
MVIE 806	187	252	215	4x12	250	80	130	807.5	473.5	75	–	Rp 1½"	220	20	284	52.8
MVIE 808	187	252	215	4x12	250	80	130	933.0	553.0	75	–	Rp 1½"	262	20	308.5	80.6
MVIE 1606	190	252	215	4x14	300	90	130	1049.0	582.5	125	4x18	DN 50	302	20	398	175.5
MVIE 3202	235	235	195	4x14	320	105	195	834.0	460.0	145	8x18	DN 65	266	35	296	113.6
MVIE 3203	235	235	195	4x14	320	105	195	886.0	506.0	145	8x18	DN 65	266	35	296	126.1
MVIE 3203	235	235	195	4x14	320	105	195	1002.0	536.0	145	8x18	DN 65	302	35	398	175.5
MVIE 3204	235	235	195	4x14	320	105	195	1048.0	582.0	145	8x18	DN 65	302	35	398	158.5
MVIE 3205	235	235	195	4x14	320	105	195	1140.0	674.0	145	8x18	DN 65	302	35	398	199.5
MVIE 5202	260	260	220	4x14	320	105	220	871.0	491.0	160	8x18	DN 80	266	30	296	126.1
MVIE 5203	260	260	220	4x14	320	105	220	1049.0	583.0	160	8x18	DN 80	302	30	398	162.5
MVIE 5204	260	260	220	4x14	320	105	220	1110.0	644.0	160	8x18	DN 80	302	30	398	199.5
MVIE 5205	260	260	220	4x14	320	105	220	1233.0	767.0	160	8x18	DN 80	302	30	398	205.5
MVIE 7002	264	350	280	4x14	380	140	199	1223.0	757.0	180	8x19	DN 100	302	45	398	202.5
MVIE 7003/1	264	350	280	4x14	380	140	199	1308.0	842.0	180	8x19	DN 100	302	45	398	198.5
MVIE 7004/2	264	350	280	4x14	380	140	199	1393.0	927.0	180	8x19	DN 100	302	45	398	224.0
MVIE 7004	264	350	280	4x14	380	140	199	1393.0	927.0	180	8x19	DN 100	302	45	398	225.0
MVIE 9501	264	350	280	4x14	380	140	199	1151.0	685.0	180	8x19	DN 100	302	45	398	199.0
MVIE 9502/2	264	350	280	4x14	380	140	199	1249.0	783.0	180	8x19	DN 100	302	45	398	196.5
MVIE 9502	264	350	280	4x14	380	140	199	1249.0	783.0	180	8x19	DN 100	302	45	398	218.0
MVIE 9503/2	264	350	280	4x14	380	140	199	1347.0	881.0	180	8x19	DN 100	302	45	398	223.5

Dimensions, weights Wilo-Multivert MVIE

Dimensions, weights – Version PN 25

Wilo-Multivert...	Dimensions															Weight approx.
	A	*B*	*C*	*D*	*E*	*F*	*G*	*H*	h_2	K_1	*K*	*Rp/DN*	*Ø M*	*T*	*X*	*m*
	mm												mm			kg
MVIE 204 M1, M3	172	212	180	4x12	250	75	100	622.5	355.5	85	4x14	DN 25	170	20	205	28.5
MVIE 204	172	212	180	4x12	250	75	100	595.5	355.5	85	4x14	DN 25	155	20	237	26.6
MVIE 208	172	212	180	4x12	250	75	100	745.5	461.5	85	4x14	DN 25	170	20	254	38.6
MVIE 214	172	212	180	4x12	250	75	100	949.5	615.5	85	4x14	DN 25	220	20	284	57.1
MVIE 403 M1, M3	172	212	180	4x12	250	75	100	598.5	331.5	100	4x18	DN 32	170	20	205	26.0
MVIE 403	172	212	180	4x12	250	75	100	571.5	331.5	100	4x18	DN 32	155	20	237	26.6
MVIE 406	172	212	180	4x12	250	75	100	697.5	413.5	100	4x18	DN 32	170	20	254	37.9
MVIE 410	172	212	180	4x12	250	75	100	853.5	519.5	100	4x18	DN 32	220	20	284	54.7
MVIE 414	172	212	180	4x12	250	75	100	1015.0	635.0	100	4x18	DN 32	262	20	308.5	82.4
MVIE 803	187	252	215	4x12	280	80	130	657.5	373.5	110	4x18	DN 40	170	20	254	37.1
MVIE 806	187	252	215	4x12	261	80	130	807.5	473.5	130	4x18	DN 40	220	20	284	53.2
MVIE 808	187	252	215	4x12	280	80	130	933.0	553.0	110	4x18	DN 40	262	20	308.5	79.9
MVIE 811	187	252	215	4x12	280	80	130	1053.0	673.0	110	4x18	DN 40	262	20	296	86.9
MVIE 1602-6	187	252	215	4x12	250	90	130	652.5	368.5	125	4x18	DN 50	170	20	254	38.0
MVIE 1603-6	187	252	215	4x12	250	90	130	787.5	453.5	125	4x18	DN 50	220	20	284	53.2
MVIE 1605-6	187	252	215	4x12	250	90	130	873.5	493.5	125	4x18	DN 50	262	20	308.5	81.1
MVIE 1606	190	252	215	4x14	300	90	130	1049.0	582.5	125	4x18	DN 50	302	20	398	175.5
MVIE 1607-6	187	252	215	4x12	250	90	130	987.5	607.5	125	4x18	DN 50	262	20	296	88.3
MVIE 1608	190	252	215	4x14	300	90	130	1118.0	651.5	125	4x18	DN 50	302	20	398	161.0
MVIE 1610	190	252	215	4x14	300	90	130	1187.0	720.5	125	4x18	DN 50	302	20	398	197.5
MVIE 3203-11	260	260	220	4x14	320	120	220	1017.0	551.0	145	8x18	DN 65	302	35	398	182.5
MVIE 3204	260	260	220	4x14	320	120	220	1063.0	597.0	145	8x18	DN 65	302	35	398	165.5
MVIE 3205	260	260	220	4x14	320	120	220	1155.0	689.0	145	8x18	DN 65	302	35	398	205.0
MVIE 3206	260	260	220	4x14	320	120	220	1155.0	689.0	145	8x18	DN 65	302	35	398	212.5
MVIE 3207	260	260	220	4x14	320	120	220	1298.0	832.0	145	8x18	DN 65	302	35	398	237.5
MVIE 5203	260	260	220	4x14	320	105	220	1049.0	583.0	160	8x18	DN 80	302	30	398	162.5
MVIE 5204	260	260	220	4x14	320	105	220	1110.0	644.0	160	8x18	DN 80	302	30	398	199.5
MVIE 5205	260	260	220	4x14	320	105	220	1233.0	767.0	160	8x18	DN 80	302	30	398	205.5
MVIE 7002	264	350	280	4x14	380	140	199	1223.0	757.0	190	8x23	DN 100	302	45	398	202.5
MVIE 7003/1	264	350	280	4x14	380	140	199	1308.0	842.0	190	8x23	DN 100	302	45	398	198.5
MVIE 7004/2	264	350	280	4x14	380	140	199	1393.0	927.0	190	8x23	DN 100	302	45	398	224.0
MVIE 7004	264	350	280	4x14	380	140	199	1393.0	927.0	190	8x23	DN 100	302	45	398	225.0
MVIE 9501	264	350	280	4x14	380	140	199	1151.0	685.0	190	8x23	DN 100	302	45	398	199.0
MVIE 9502/2	264	350	280	4x14	380	140	199	1249.0	783.0	190	8x23	DN 100	302	45	398	196.5
MVIE 9502	264	350	280	4x14	380	140	199	1249.0	783.0	190	8x23	DN 100	302	45	398	218.0
MVIE 9503/2	264	350	280	4x14	380	140	199	1347.0	881.0	190	8x23	DN 100	302	45	398	223.5

Dimensions, weights Wilo-Multivert MVIE

Dimensions, weights – Version PN 25 Victaulic 3~400 V

Wilo-Multivert...	Dimensions													Weight approx.
	A	*B*	*C*	*D*	*E*	*F*	*G*	*H*	h_2	*Ø M*	*Ø N*	*T*	*X*	*m*
	mm													kg
MVIE 204 M1, M3	172	212	180	4x12	210	50	100	597.5	330.5	170	42.4	20	205	28.5
MVIE 204 M2	172	212	180	4x12	210	50	100	597.5	330.5	170	42.4	20	205	28.5
MVIE 204	172	212	180	4x12	210	50	100	594.5	354.5	155	42.4	20	237	26.6
MVIE 208	172	212	180	4x12	210	50	100	720.5	436.5	170	42.4	20	254	38.6
MVIE 214	172	212	180	4x12	210	50	100	949.5	615.5	220	42.4	20	284	57.1
MVIE 403 M1, M3	172	212	180	4x12	210	50	100	573.5	306.5	170	42.4	20	205	26.0
MVIE 403 M2	172	212	180	4x12	210	50	100	573.5	306.5	170	42.4	20	205	26.0
MVIE 403	172	212	180	4x12	210	50	100	546.6	306.5	155	42.4	20	237	26.6
MVIE 406	172	212	180	4x12	210	50	100	672.5	388.5	170	42.4	20	254	37.9
MVIE 410	172	212	180	4x12	210	50	100	853.5	519.5	220	42.4	20	284	54.7
MVIE 414	172	212	100	4x12	210	50	100	1015.0	635.0	262	42.4	20	308.5	82.4
MVIE 803	187	252	215	4x12	261	80	130	657.5	373.5	170	42.4	20	254	37.1
MVIE 806	187	252	215	4x12	261	80	130	807.5	473.5	220	42.4	20	284	53.2
MVIE 808	187	187	130	4x12	261	80	130	933.0	553.0	262	60.3	20	308.5	79.9
MVIE 811	187	187	130	4x12	261	80	130	1053.0	673.0	262	60.3	20	296	86.9

Pressure boosting

Single pumps

Series description Wilo-Multivert MVI

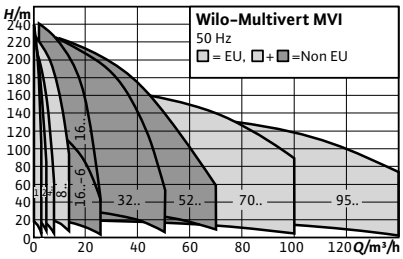

ErP READY APPLIES TO EUROPEAN DIRECTIVE FOR ENERGY RELATED PRODUCTS

Design
Non-self-priming multistage pump

Application
- Water supply and pressure boosting
- Fire extinguishing systems
- Boiler feed
- Industrial circulation systems
- Process engineering
- Cooling water circulation systems
- Washing and sprinkling systems

Type key

Example:	**MVI 7002/1 CN-1/16/E/3-400-50-2**
MVI	Vertical high-pressure multistage centrifugal pump
70	Flow rate in m^3/h
02	Number of impellers
1	Number of trimmed impellers; [only MVI 70.. and 95..]
C	**Option [only some types ≥ 30 kW]** C = cartridge mechanical seal
N	Standardised motor
1	Material 1 = 1.4301 (AISI 304); [only MVI 8.. and smaller] 2 = 1.4404 (AISI 316L) 3= pump housing EN-GJL-250 (cataphoretic coating), hydraulics 1.4301 (AISI 304); [only MVI 70.. and 95..]
16	Flange type 16 = flange PN16 (round or oval) 25 = flange PN25 (round or oval) P = Victaulic coupling [only MVI 8.. and smaller]
E	Gasket type E = EPDM V = FKM (Viton)
3	1 = 1~ (alternating current); [only MVI 8.. and smaller] 3 = 3~ (three-phase current)
400	Connection voltage in V
50	Frequency in Hz
2	Number of poles

Special features/product advantages
- All parts that come in contact with the fluid are corrosion-resistant
- Materials: Stainless steel 1.4301 (AISI 304) or 1.4404 (AISI 316L), pump housing EN-GJL-250 cataphoretic-coated (MVI 70/95)
- EPDM seals.
- All relevant components are KTW and WRAS approved
- IE2-IEC three-phase AC motor (≥ 0.75 kW, IE3 on request)

Equipment/function
- Stainless steel pump in-line design
- MVI 1.. to 8..: PN16 version with oval flange; PN25 version with round flange
- MVI 70.. and 95..: PN16 and PN25 version with round flange
- IE2-IEC standard motor

Technical data
- Electrical connection:
  - 1~230 V (±10 %), 50 Hz or optionally 220 V (±10 %), 60 Hz (up to 1.5 kW); only MVI 1.. – 8..
  - 3~230 V (±10 %), 50 Hz (Δ) or optionally 220 V (±10 %), 60 Hz (Δ) up to 4.0 kW,
    400 V (±10 %), 50 Hz (Y) or optionally 380 V (±10 %), 60 Hz (Y) or 460 V (±10 %), 60 Hz (Y) from 4.0 kW
- Fluid temperature -15 to +120 °C
- Max. operating pressure 16/25 bar
- Max. inlet pressure 10 bar
- Protection class IP 55
- Flange connections:
  - MVI 1.. – 8.., PN 16; oval flange (G1 – G2)
  - MVI 1.. – 8.., PN 25: Round flange (DN25 – DN40)
- MVI 1.. – 8.., PN 25: optionally with Victaulic connections (for MVI 1.. to MVI 8.. on request)
- MVI 70../95.. PN 16/PN 25: Round flange (DN 100)

Series description Wilo-Multivert MVI

Materials

MVI 1.. to 8..:

- Impellers and stage chambers of stainless steel 1.4301 (1.4404 for aggressive media)
- Pump housing of stainless steel 1.4301 (1.4404 for aggressive media)
- Shaft, depending on type, of stainless steel 1.4301 (1.4404 for aggressive media)
- Gasket of EPDM (EP 851)/FKM (Viton)
- Housing cover of stainless steel 1.4301 (1.4404 for aggressive media)
- Housing bottom of stainless steel 1.4301 (1.4404 for aggressive media)
- Mechanical seal of B-carbon/tungsten carbide, SiC/carbon
- Jacket pipe of stainless steel 1.4301 (1.4404 for aggressive media)
- Bearing of tungsten carbide
- Baseplate EN-GJL-250

MVI 70../95..:

- Impellers of stainless steel 1.4408
- Stage chambers of stainless steel 1.4301 (1.4404 for aggressive media)
- Pump housing EN-GJL-250 (1.4408 for aggressive media)
- Shaft of stainless steel 1.4057 (1.4462 for aggressive media)
- Gasket of EPDM (EP 851)/Viton
- Housing cover of stainless steel 1.4301 (1.4408 for aggressive media)
- Housing bottom of stainless steel 1.4301 (1.4404 for aggressive media)
- Mechanical seal of B-carbon/tungsten carbide, SiC/carbon
- Pressure shroud of stainless steel 1.4301 (1.4404 for aggressive media)
- Bearing of tungsten carbide

Scope of delivery

- MVI high-pressure multistage centrifugal pump
- MVI 1.. – 8..: Oval counter flanges with corresponding screws and O-rings (PN16 variant) or bolts and gaskets if a counter flange is used (PN25 variant with round flanges)
- MVI 70../95..: Bolts and gaskets if a counter flange is used (PN16 and PN25 with round flanges)
- Installation and operating instructions

General notes - ErP (ecological design-) directive

- The benchmark for most efficient water pumps is MEI ≥ 0.70
- The efficiency of a pump with a trimmed impeller is usually lower than that of a pump with the full impeller diameter. The trimming of the impeller will adapt the pump to a fixed duty point, leading to reduced energy consumption. The minimum efficiency index (MEI) is based on the full impeller diameter.
- The operation of this water pump with variable duty points may be more efficient and economic when controlled, for example, by the use of a variable speed drive that matches the pump duty to the system.
- Information on benchmark efficiency is available at **www.europump.org/efficiencycharts**

Overview of versions Wilo Multivert MVI

	Wilo-Multivert MVI...		
	1/2/4/8/16-6	**16/32/52**	**32..C/52..C/70/95**
Materials			
Pump base EN-GJL-250 with cataphoretic coating, hydraulics in 1.4301/1.4404 (AISI 304/316L)	–	•	•
Parts in contact with fluid in 1.4301 (AISI 304)	•	–	•
Parts in contact with fluid in 1.4404 (AISI 316L)	•	•	–
Seal version			
Seal	EPDM/FKM (Viton)	EPDM/FKM (Viton)	EPDM
Hydraulic connection			
Threaded connection	–	–	–
Oval flange	•	–	–
Round flange	•	•	•
Victaulic quick coupling	•	–	–
Motor version			
1~230 V, 50 Hz	• (up to P_2 = 1.5 kW)	–	–
3~230 V, 50 Hz	optional	optional	optional
3~400 V, 50 Hz	•	• (up to P_2=4 kW for 230/400V; from P_2=5.5 kW and higher only for 400 V Δ)	•
Individual motors for special voltages, 50 Hz or 60 Hz	optional	optional	optional
Protection class	IP 55	IP 55	IP 55
Explosion protection	optional	optional	optional
Motors with PTC thermistors	optional	optional	optional
Motors with UL certificates	optional	optional	optional
Motors with CSA certificates	optional	optional	optional
Thermal motor protection switch (EM version)	• Optional (up to and including P_2=1.5 kW)	–	–
Speed can be controlled via external FC	•	•	•
Integrated frequency converter	–	–	–
Painting			
Individual painting	Optional	Optional	Optional
Mechanical seal			
Tungsten carbide/carbon	•	•	•
SiC/carbon	Optional	Optional	Optional
Tungsten carbide/tungsten carbide	optional	optional	optional
SIC/SIC	optional	optional	optional
Potable water approvals			
KTW	•	•	•
WRAS	•	•	•

• = available, – = not available

Technical data Wilo Multivert MVI

	Wilo-Multivert MVI 1/2/4/8/16..-6				
	1..	**2..**	**4..**	**8..**	**16-6..**
Approved fluids					
Potable water, heating water, process water	•	•	•	•	•
Condensate	•	•	•	•	•
Water/glycol mixtures (max. 40 %; with admixtures exceeding 10 %, the pumping data must be checked)	•	•	•	•	•
Other low viscous fluids (without abrasive or long-fibre constituents, provided they do not corrode the materials used)	•	•	•	•	•
Power					
Max. volume flow m^3/h	3.0	5.0	8.0	14.0	25.0
Max. delivery head m	230	230	210	230	130
Fluid temperature °C	-15 ... 120				
Max. ambient temperature °C	40	40	40	40	40
Operating pressure bar	16/25	16/25	16/25	16/25	16/25
Max. inlet pressure bar	10	10	10	10	10
Nominal speed rpm	2950				
Motor					
Mains connection 1~ (permitted voltage tolerance +/- 10%)	230 V, 50 Hz				
Mains connection 3~ (permitted voltage tolerance +/- 10%)	230 V, 50 Hz Δ 400 V, 50 Hz Y 400 V, 50 Hz Δ				
Insulation class	F				
Electromagnetic compatibility	EN 61800-3				
Protection class	IP 55				
Connections					
Nominal diameter of pipe connections on suction side	-	-	-	-	-
Nominal diameter of pipe connections on pressure side	-	-	-	-	-
Flange connections PN 16/PN 25	25	25	32	40	50
Victaulic connections	•	•	•	•	•
Materials					
Impeller	1.4301/1.4404				1.4301
Stage chambers	1.4301/1.4404				1.4301
Pump housing	1.4301/1.4404				1.4301
Pump shaft	1.4028				
Seal	EPDM/FKM (Viton)				EPDM/Viton
Housing cover	1.4301	1.4301	1.4301	1.4301	1.4301
Lower housing section	1.4301	1.4301	1.4301	1.4301	1.4301/ 1.4404
Mechanical seal	B-carbon/tungsten carbide SiC/carbon				
Pressure shroud	1.4301/1.4404				
Bearing	Tungsten carbide				
Pump base	EN-GJL-250	EN-GJL-250	EN-GJL-250	EN-GJL-250	EN-GJL-250

• = available, - = not available

Note on inlet pressure
The maximum inlet pressure is calculated by subtracting the maximum delivery head of the pump at Q= 0 from the maximum operating pressure of the system.

Note on materials
1.4301 corresponds to AISI 304, 1.4404 corresponds to AISI 316L.

Technical data Wilo Multivert MVI

	Wilo-Multivert MVI 16/32/52/70/95..		
	16..	**32..**	**52..**
Approved fluids			
Potable water, heating water, process water	•	•	•
Condensate	•	•	•
Water/glycol mixtures (max. 40 %; with admixtures exceeding 10 %, the pumping data must be checked)	•	•	•
Other low viscous fluids (without abrasive or long-fibre constituents, provided they do not corrode the materials used)	•	•	•
Power			
Max. volume flow m^3/h	25.0	50.0	70.0
Max. delivery head m	240	220	180
Fluid temperature °C	-15 ... 120		
Max. ambient temperature °C	40	40	40
Operating pressure bar	16/25	16/25	16/25
Max. inlet pressure bar	10	10	10
Nominal speed rpm	2950		
Motor			
Mains connection 1~ (permitted voltage tolerance +/- 10%)	230 V, 50 Hz		
Mains connection 3~ (permitted voltage tolerance +/- 10%)	230 V, 50 Hz Δ 400 V. 50 Hz Y 400 V, 50 Hz Δ or 380 V, 60 Hz Δ (from 5.5 kW)		
Insulation class	F	F	F
Electromagnetic compatibility	EN 61800-3	EN 61800-3	EN 61800-3
Protection class	IP 55	IP 55	IP 55
Connections			
Nominal diameter of pipe connections on suction side	-	-	-
Nominal diameter of pipe connections on pressure side	-	-	-
Flange connections PN 16/PN 25	50	65	80
Victaulic connections	–	–	–
Materials			
Impeller	1.4301/1.4404	1.4301/1.4404	1.4301/1.4404
Stage chambers	1.4301/1.4404	1.4301/1.4404	1.4301/1.4404
Pump housing	EN-GJL-250/1.4404	EN-GJL-250/1.4404	EN-GJL-250/1.4404
Pump shaft	1.4028		
Seal	EPDM/FKM (Viton)		
Housing cover	1.4301	1.4301	1.4301
Lower housing section	–	–	–
Mechanical seal	B-carbon/tungsten carbide SiC/carbon		
Pressure shroud	1.4301/1.4404		
Bearing	Tungsten carbide	Tungsten carbide	Tungsten carbide

• = available, - = not available

Note on inlet pressure
The maximum inlet pressure is calculated by subtracting the maximum delivery head of the pump at Q= 0 from the maximum operating pressure of the system.

Note on materials
1.4301 corresponds to AISI 304, 1.4404 corresponds to AISI 316L.

Technical data Wilo Multivert MVI

	Wilo-Multivert MVI 16/32/52/70/95..			
	32..C	**52..C**	**70..**	**95..**
Approved fluids				
Potable water, heating water, process water	•	•	•	•
Condensate	–	–	–	–
Water/glycol mixtures (max. 40 %; with admixtures exceeding 10 %, the pumping data must be checked)	•	•	•	•
Other low viscous fluids (without abrasive or long-fibre constituents, provided they do not corrode the materials used)	•	•	•	•
Power				
Max. volume flow m^3/h	50.0	70.0	100.0	140.0
Max. delivery head m	220	180	172	150
Fluid temperature °C	-15 ... 120			
Max. ambient temperature °C	40	40	40	40
Operating pressure bar	25	25	16/25	16/25
Max. inlet pressure bar	10	10	10	10
Nominal speed rpm	2900			
Motor				
Mains connection 1~ (permitted voltage tolerance +/- 10%)	230 V, 50 Hz			
Mains connection 3~ (permitted voltage tolerance +/- 10%)	230 V, 50 Hz Δ (only MVI 700/1) 400 V. 50 Hz Δ			
Insulation class	F	F	F	F
Electromagnetic compatibility	EN 61800-3	EN 61800-3	EN 61800-3	EN 61800-3
Protection class	IP 55	IP 55	IP 55	IP 55
Connections				
Nominal diameter of pipe connections on suction side	-	-	-	-
Nominal diameter of pipe connections on pressure side	-	-	-	-
Flange connections PN 16/PN 25	65	80	100	100
Victaulic connections	–	–	–	–
Materials				
Impeller	1.4401			
Stage chambers	1.4404			
Pump housing	1.4301			
Pump shaft	1.4301			
Seal	EPDM			
Housing cover	1.4301	1.4301	1.4301	1.4301
Lower housing section	1.4301/1.4404	1.4301/1.4404	1.4301/1.4404	1.4301/1.4404
Mechanical seal	Tungsten carbide/carbon/EPDM			
Pressure shroud	1.4301/1.4404			
Bearing	Tungsten carbide			

• = available, - = not available

Note on inlet pressure
The maximum inlet pressure is calculated by subtracting the maximum delivery head of the pump at Q= 0 from the maximum operating pressure of the system.

Note on materials
1.4301 corresponds to AISI 304, 1.4404 corresponds to AISI 316L.

Pump curves Wilo-Multivert MVI 1/2/4/8/16..-6

Wilo-Multivert MVI 102 - 124

Minimum Efficiency Index (MEI): ≥ 0.1

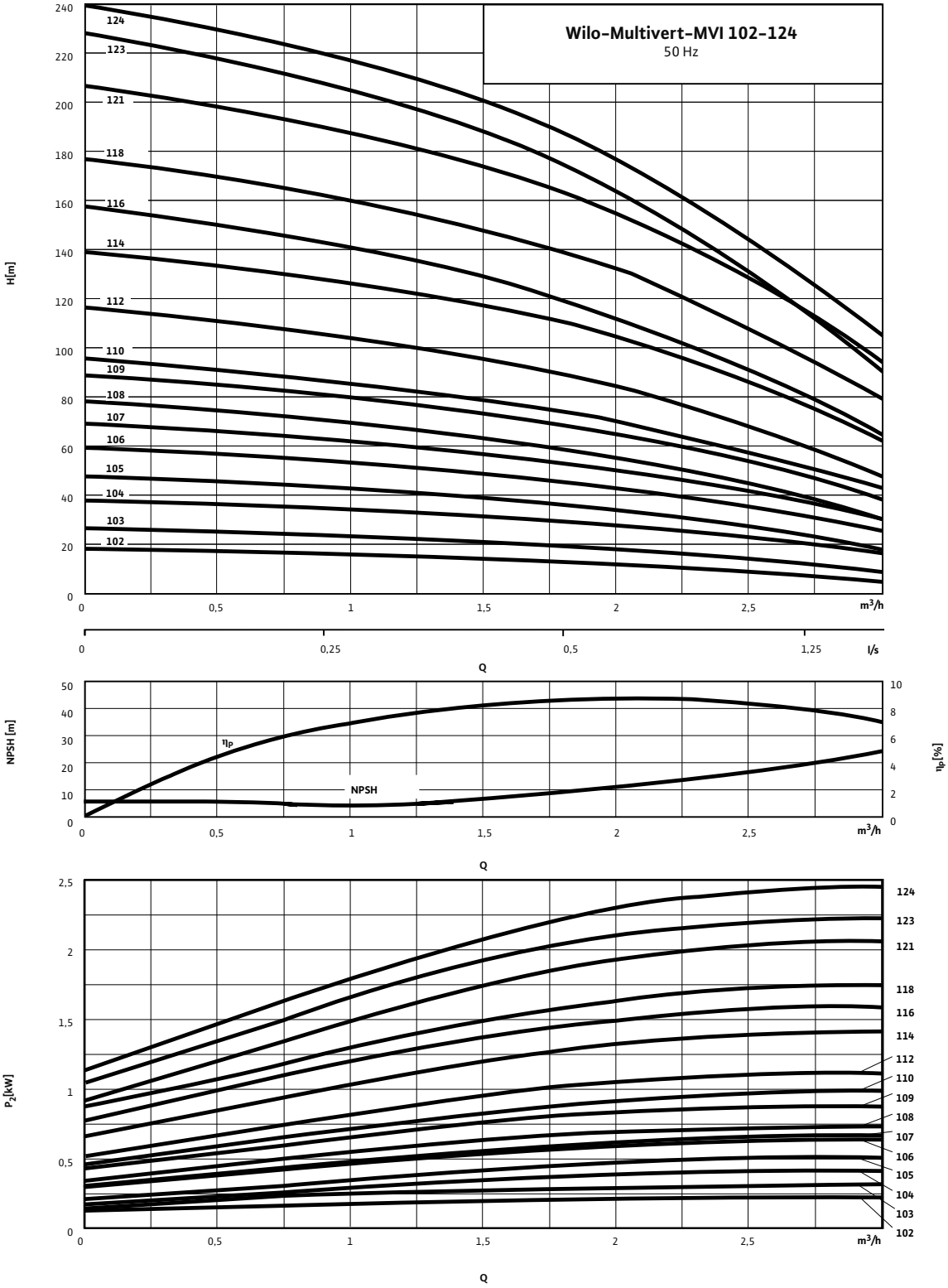

Pump curves in accordance with ISO 9906, class 2

Pump curves Wilo-Multivert MVI 1/2/4/8/16..-6

Wilo-Multivert MVI 202 - 220

Minimum Efficiency Index (MEI): ≥ 0.1

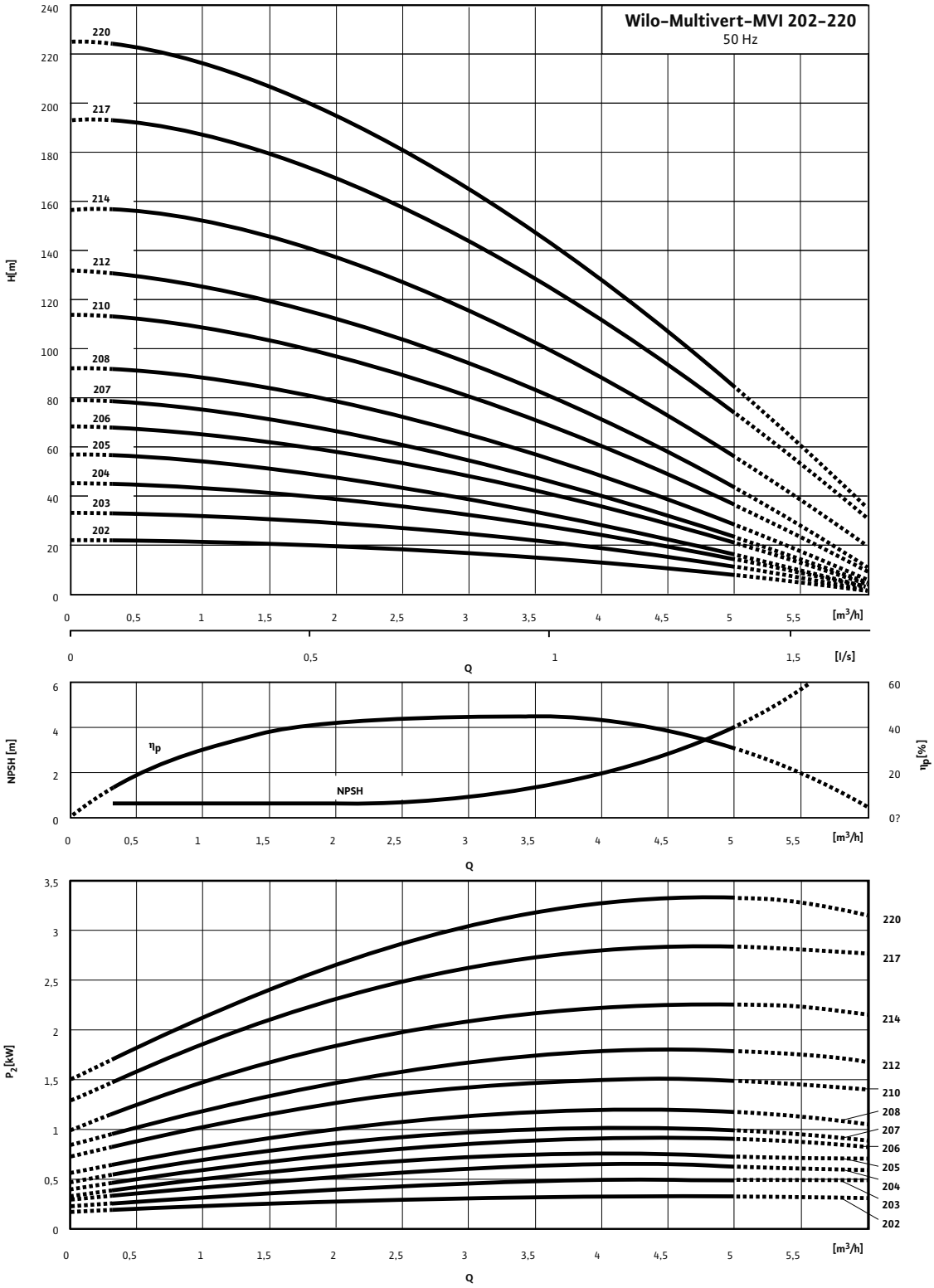

Pump curves in accordance with ISO 9906, class 2

Pump curves Wilo-Multivert MVI 1/2/4/8/16..-6

Wilo-Multivert MVI 402 - 419

Minimum Efficiency Index (MEI): ≥ 0.1

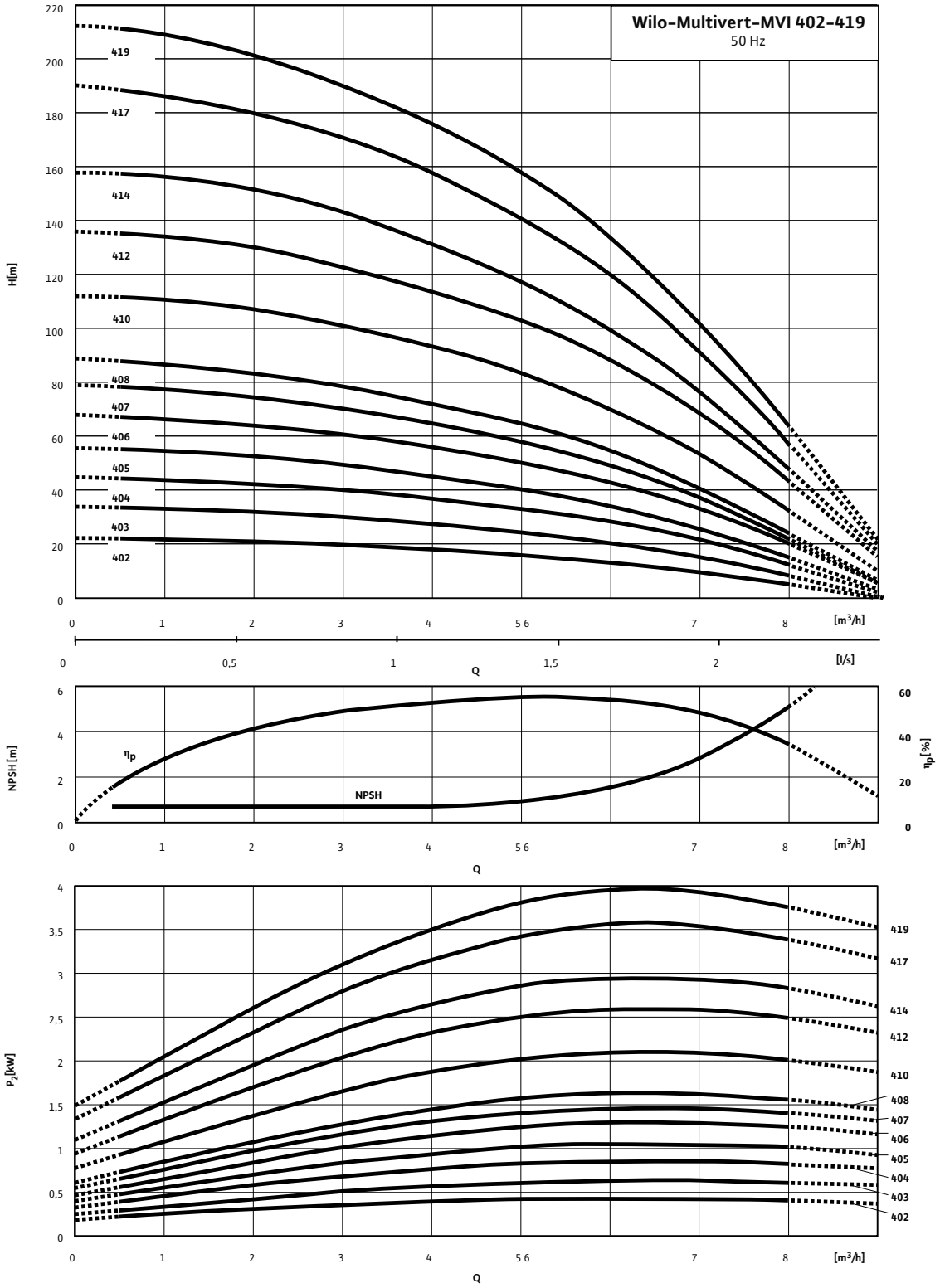

Pump curves in accordance with ISO 9906, class 2

Pump curves Wilo-Multivert MVI 1/2/4/8/16..-6

Wilo-Multivert MVI 802 - 819

2-pole, 50 Hz, Minimum Efficiency Index (MEI): ≥ 0.1

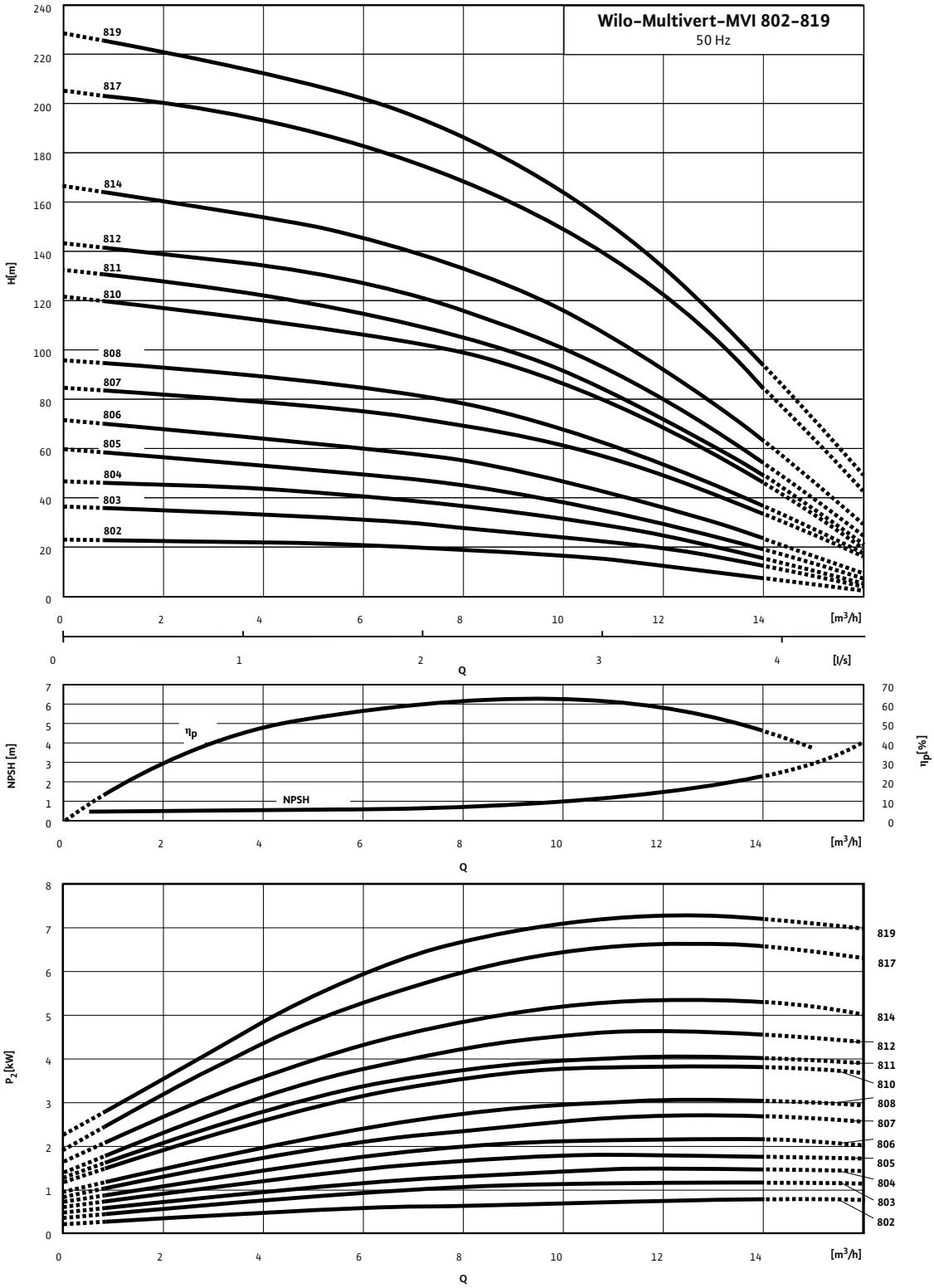

Pump curves in accordance with ISO 9906, class 2

Pump curves Wilo-Multivert MVI 1/2/4/8/16..-6

Wilo-Multivert MVI 1602-6 - 1611-6

Minimum Efficiency Index (MEI): ≥ 0.1

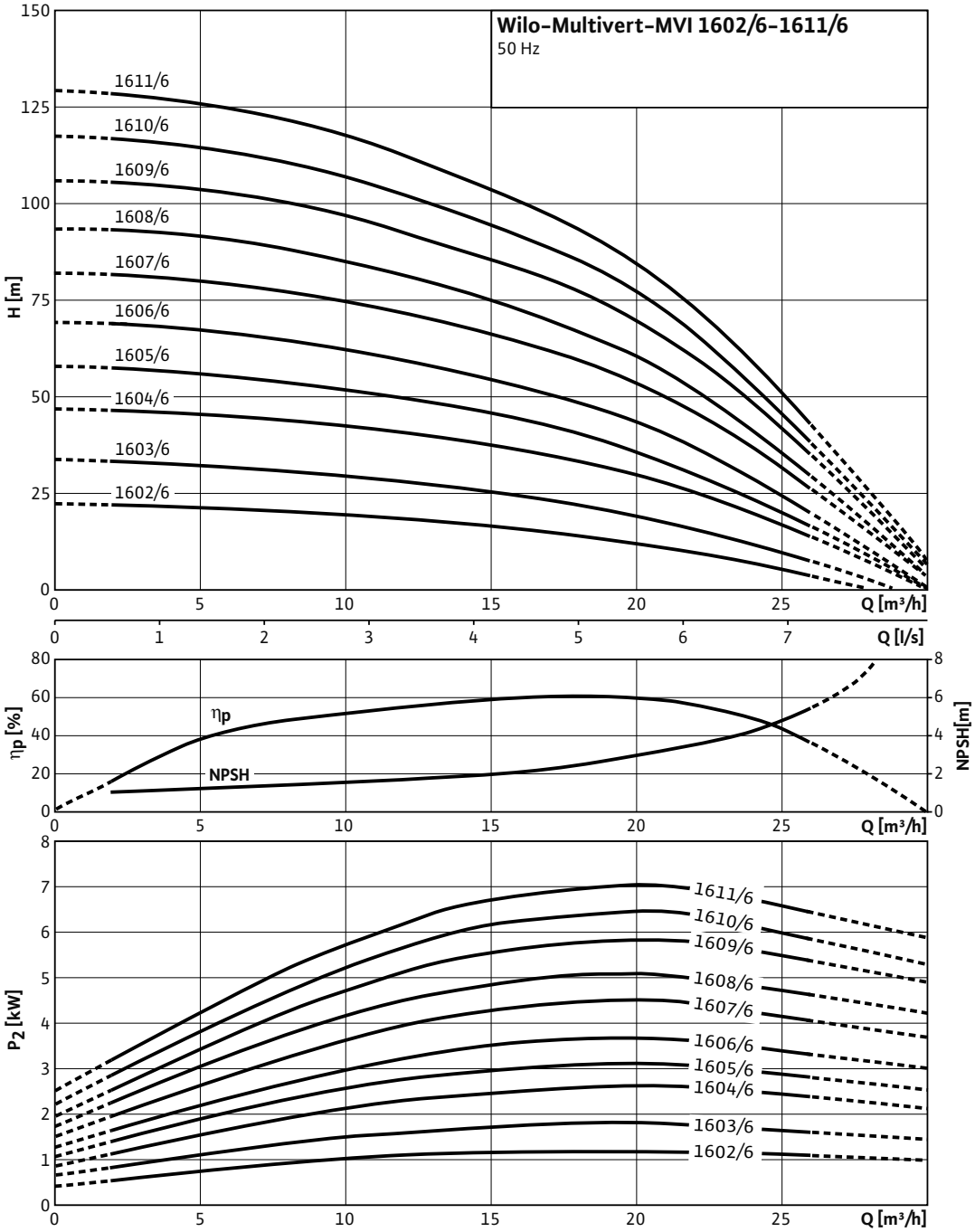

Pump curves in accordance with ISO 9906, class 2

Terminal diagram, motor data Wilo-Multivert MVI 1/2/4/8/16..-6

Electrical connection

Single-phase current

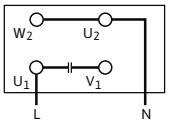

1~230 V

Electrical connection

Single-phase current at wrong direction of rotation

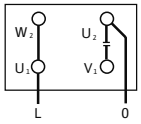

1~230 V

Electrical connection

Three-phase current ≤ 4 kW

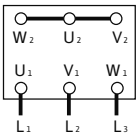

3~400 V ⋎

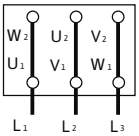

3~230 V Δ

Electrical connection

Three-phase current ≥ 5.5 kW; Y-Δ-direct starting

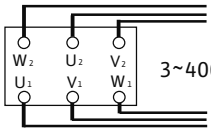

3~400 V

Motor data

Wilo-Multivert...	Nominal motor power	Nominal current	
		1~230 V, 50 Hz	3~230/400 V, 50 Hz
	P_2	I_N	
	kW	A	
MVI 102	0.37	1.70	1.54 /0.89
MVI 103	0.37	1.70	1.54 /0.89
MVI 104	0.55	3.60	2.30 /1.33
MVI 105	0.55	3.60	2.30 /1.33
MVI 106	0.75	4.85	2.77 /1.62
MVI 107	0.75	4.85	2.77 /1.62
MVI 108	0.75	4.85	2.77 /1.62
MVI 109	1.10	6.60	4.20 /2.40
MVI 110	1.10	6.60	4.20 /2.40
MVI 112	1.10	6.60	4.20 /2.40
MVI 114	1.50	9.10	5.40 /3.10
MVI 116	2.20	–	7.60 /4.40
MVI 118	2.20	–	7.60 /4.40
MVI 121	2.20	–	7.60 /4.40
MVI 123	2.20	–	7.60 /4.40
MVI 124	3.00	–	10.00 /5.78
MVI 212	2.20	–	7.60 /4.40
MVI 214	2.20	–	7.60 /4.40
MVI 217	3.00	–	10.00 /5.78
MVI 220	4.00	–	13.30 /7.70
MVI 202	0.37	2.70	1.54 /0.89
MVI 203	0.55	3.60	2.30 /1.33

Terminal diagram, motor data Wilo-Multivert MVI 1/2/4/8/16..-6

Motor data			
Wilo-Multivert...	**Nominal motor power**	**Nominal current**	
		1~230 V, 50 Hz	3~230/400 V, 50 Hz
	P_2	I_N	
	kW	A	
MVI 204	0.75	4.85	2.77 /1.62
MVI 205	0.75	4.85	2.77 /1.62
MVI 206	1.10	6.60	4.20 /2.40
MVI 207	1.10	6.60	4.20 /2.40
MVI 208	1.50	9.10	5.40 /3.10
MVI 210	1.50	9.10	5.40 /3.10
MVI 402	0.55	3.60	2.30 /1.33
MVI 403	0.75	4.85	2.77 /1.62
MVI 404	1.10	6.60	4.20 /2.40
MVI 405	1.10	6.60	4.20 /2.40
MVI 406	1.50	9.10	5.40 /3.10
MVI 407	1.50	9.10	5.40 /3.10
MVI 408	2.20	–	7.60 /4.40
MVI 410	2.20	–	7.60 /4.40
MVI 412	3.00	–	10.00 /5.78
MVI 414	3.00	–	10.00 /5.78
MVI 417	4.00	–	13.30 /7.70
MVI 419	4.00	–	13.30 /7.70
MVI 802	0.75	4.85	2.77 /1.62
MVI 803	1.10	6.60	4.20 /2.40
MVI 804	1.50	9.10	5.40 /3.10
MVI 805	2.20	–	7.60 /4.40
MVI 806	2.20	–	7.60 /4.40
MVI 807	3.00	–	10.00 /5.78
MVI 808	3.00	–	10.00 /5.78
MVI 810	4.00	–	13.30 /7.70
MVI 811	4.00	–	13.30 /7.70
MVI 812	5.50	–	-/10.60
MVI 814	5.50	–	-/10.60
MVI 817	7.50	–	-/14.00
MVI 819	7.50	–	-/14.00
MVI 1602-6	1.50	–	5.40 /3.10
MVI 1603-6	2.20	–	7.60 /4.40
MVI 1604-6	3.00	–	10.00 /5.78
MVI 1605-6	4.00	–	13.30 /7.70
MVI 1606-6	4.00	–	13.30 /7.70
MVI 1607-6	5.50	–	-/10.60
MVI 1608-6	5.50	–	-/10.60
MVI 1609-6	7.50	–	-/14.00
MVI 1610-6	7.50	–	-/14.00
MVI 1611-6	7.50	–	-/14.00

Dimensions, weights Wilo-Multivert MVI 1/2/4/8/16..-6

Dimension drawing

Wilo-Multivert MVI 102 - 124

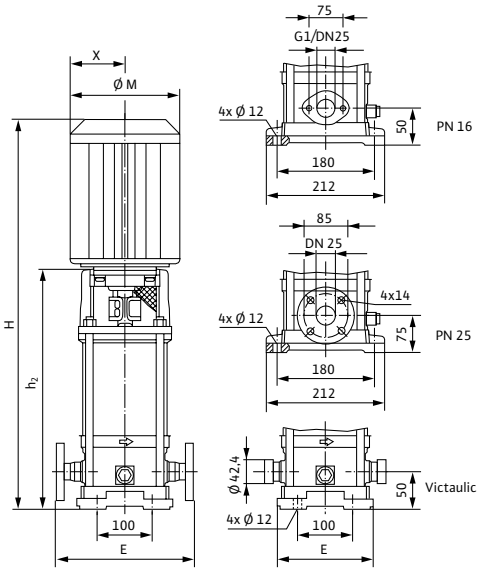

Dimension drawing

Wilo-Multivert MVI 202 - 220

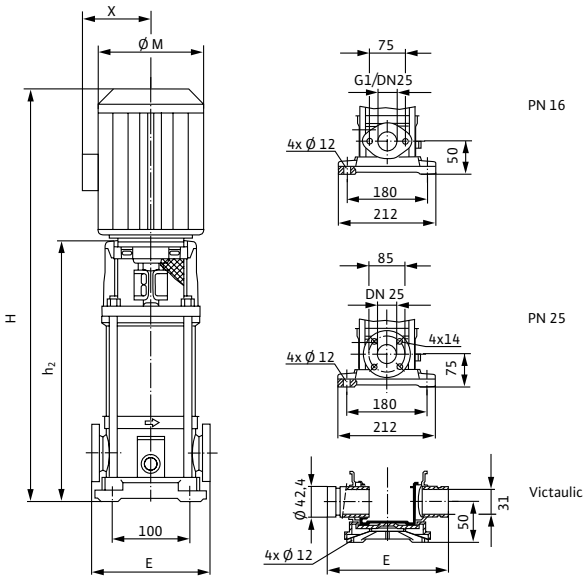

Dimension drawing

Wilo-Multivert MVI 402 - 419

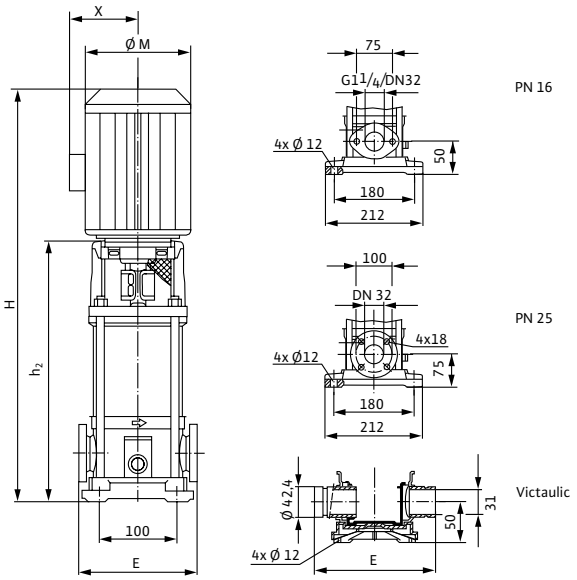

Dimension drawing

Wilo-Multivert MVI 802 - 819

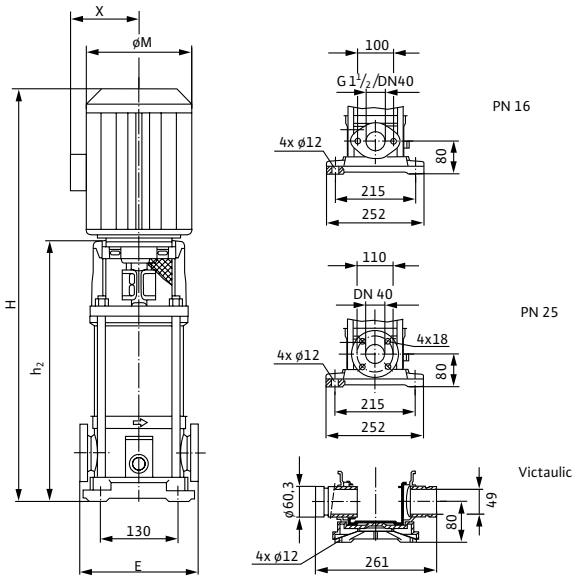

Dimensions, weights Wilo-Multivert MVI 1/2/4/8/16..-6

Dimension drawing

Wilo-Multivert MVI 1602-6 - 1611-6

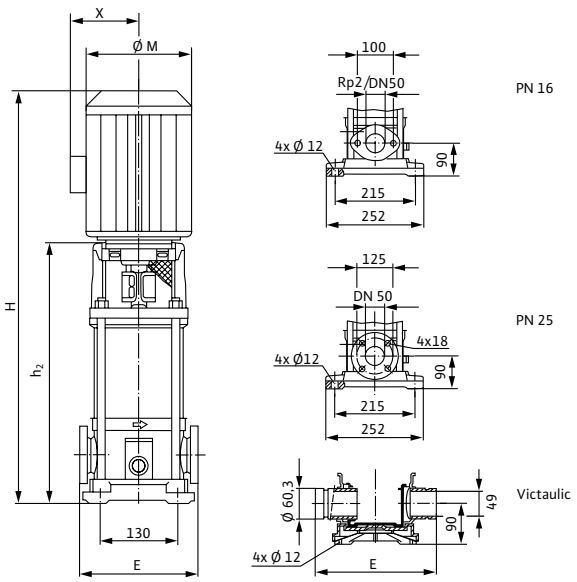

Dimensions, weights - Version PN 16 oval flange										
Wilo-Multivert...	**Dimensions**								**Weight approx.**	
			1~ 230V	3~ 400V	1~ 230V	3~ 400V	1~ 230V	3~ 400V	1~ 230V	3~ 400V
	E	*h_2*	*H*		*Ø M*		*X*		*m*	
	mm								kg	
MVI 102	204	305.0	490.0	529.0	140	130	107	121	19.5	18.8
MVI 103	204	305.0	490.0	529.0	140	130	107	121	19.7	19
MVI 104	204	304.5	489.5	528.0	140	130	107	121	20.7	19.8
MVI 105	204	344.5	529.5	568.0	140	130	107	121	21.9	21
MVI 106	204	355.0	570.0	599.0	162	146	121	127	24	23.9
MVI 107	204	374.5	589.5	618.0	162	146	121	127	24.7	24.6
MVI 108	204	414.5	629.5	658.0	162	146	121	127	25.9	25.8
MVI 109	204	414.5	629.5	658.0	162	146	121	127	27.8	27.2
MVI 110	204	434.5	649.5	678.0	162	146	121	127	28.5	27.9
MVI 112	204	474.5	689.5	718.0	162	146	121	127	29.8	29.2
MVI 114	204	524.5	769.5	803.0	182	193	131	149	39.9	35.6

[1]) Weight including counter flanges, without packaging

Dimensions, weights Wilo-Multivert MVI 1/2/4/8/16..-6

Dimensions, weights – Version PN 25 round flange

Wilo-Multivert...	Dimensions								Weight approx.	
			1~ 230V	3~ 400V	1~ 230V	3~ 400V	1~ 230V	3~ 400V	1~ 230V	3~ 400V
	E	h_2	*H*		*Ø M*		*X*		*m*	
	mm								kg	
MVI 102	250	330.0	515.0	554.0	140	130	107	121	19.9	20.6
MVI 103	250	330.0	515.0	554.0	140	130	107	121	20.1	20.8
MVI 104	250	329.5	514.5	553.0	140	130	107	121	20.9	21.8
MVI 105	250	369.5	554.5	593.0	140	130	107	121	22.1	23
MVI 106	250	380.0	595.0	624.0	162	146	121	127	25	25.1
MVI 107	250	399.5	614.5	643.0	162	146	121	127	25.7	25.8
MVI 108	250	439.5	654.5	683.0	162	146	121	127	26.9	27
MVI 109	250	439.5	654.5	683.0	162	146	121	127	28.3	28.9
MVI 110	250	459.5	674.5	703.0	162	146	121	127	29	29.6
MVI 112	250	499.5	714.5	743.0	162	146	121	127	30.3	30.9
MVI 114	250	549.5	794.5	828.0	182	193	131	149	36.7	41
MVI 116	250	589.5	–	868.0	–	193	–	149	38.9	–
MVI 118	250	629.5	–	908.0	–	193	–	149	40.3	–
MVI 121	250	689.5	–	968.0	–	193	–	149	44.4	–
MVI 123	250	749.5	–	1028.0	–	193	–	149	46.3	–
MVI 124	250	759.5	–	1051.0	–	217	–	141	51.1	–

[1]) Weight without packaging

Dimensions, weights – Version PN 16 oval flange

Wilo-Multivert...	Dimensions								Weight approx.	
			1~ 230V	3~ 400V	1~ 230V	3~ 400V	1~ 230V	3~ 400V	1~ 230V	3~ 400V
	E	h_2	*H*		*Ø M*		*X*		*m*	
	mm								kg	
MVI 202	204	296.5	481.5	520.0	140	130	107	121	17.5	18
MVI 203	204	296.5	519.0	520.0	140	130	107	121	18.3	19
MVI 204	204	330.5	545.5	574.0	162	146	121	127	21.1	22
MVI 205	204	354.5	569.5	598.0	162	146	121	127	21.7	22
MVI 206	204	378.5	593.5	622.0	162	146	121	127	24	27
MVI 207	204	412.5	627.5	656.0	162	146	121	127	26.2	29
MVI 208	204	436.5	681.5	715.0	182	193	131	149	33.5	34
MVI 210	204	484.5	729.5	763.0	182	193	131	149	34.7	36
MVI 212	204	532.5	–	811.0	–	193	–	149	–	38
MVI 402	204	296.5	519.0	520.0	140	130	107	121	18.3	19
MVI 403	204	306.5	521.5	550.0	162	146	121	127	20.5	21
MVI 404	204	330.5	545.5	574.0	162	146	121	127	22.9	26
MVI 405	204	354.5	569.5	598.0	162	146	121	127	23.5	26
MVI 406	204	388.5	633.5	667.0	182	193	131	149	32.3	33
MVI 407	204	412.5	657.5	691.0	182	193	131	149	33	34
MVI 408	204	436.5	–	715.0	–	193	–	149	–	35
MVI 410	204	484.5	–	763.0	–	193	–	149	–	36
MVI 412	204	542.5	–	834.0	–	217	–	141	–	46

Dimensions, weights Wilo-Multivert MVI 1/2/4/8/16..-6

Dimensions, weights – Version PN 16 oval flange

Wilo-Multivert...	Dimensions								Weight approx.	
			1~ 230V	3~ 400V	1~ 230V	3~ 400V	1~ 230V	3~ 400V	1~ 230V	3~ 400V
	E	h_2	*H*		*Ø M*		*X*		*m*	
	mm								kg	
MVI 414		615.5	–	907.0	–	217	–	141	–	42.3
MVI 802	250	333.5	548.5	577.0	162	146	121	127	22.6	23
MVI 803	250	363.5	578.5	607.0	162	146	121	127	25.1	28
MVI 804	250	403.5	648.5	682.0	182	193	131	149	34.1	35
MVI 805	250	433.5	–	712.0	–	193	–	149	–	36
MVI 806	250	463.5	–	742.0	–	193	–	149	–	36
MVI 807	250	503.5	–	795.0	–	217	–	141	–	46
MVI 808	250	533.5	–	825.0	–	217	–	141	–	47
MVI 810	250	593.5	–	885.0	–	217	–	141	–	44
MVI 811	250	653.5	–	945.0	–	217	–	141	–	45
MVI 812	250	653.5	–	981.0	–	220	–	160	–	58

[1]) Weight including counter flanges, without packaging

Dimensions, weights – Version PN 25 round flange

Wilo-Multivert...	Dimensions								Weight approx.	
			1~ 230V	3~ 400V	1~ 230V	3~ 400V	1~ 230V	3~ 400V	1~ 230V	3~ 400V
	E	h_2	*H*		*Ø M*		*X*		*m*	
	mm								kg	
MVI 202	250	321.5	506.5	545.0	140	130	107	121	18.8	20
MVI 203	250	321.5	544.0	545.0	140	130	107	121	19.6	20
MVI 204	250	355.5	570.5	599.0	162	146	121	127	22.4	23
MVI 205	250	379.5	594.5	623.0	162	146	121	127	23	34
MVI 206	250	403.5	618.5	647.0	162	146	121	127	25.4	28
MVI 207	250	437.5	652.5	681.0	162	146	121	127	27.5	30
MVI 208	250	461.5	706.5	740.0	182	193	131	149	34.8	36
MVI 210	250	509.5	754.5	788.0	182	193	131	149	36.1	37
MVI 212	250	557.5	–	836.0	–	193	–	149	–	39
MVI 214	250	605.5	–	884.0	–	193	–	149	–	40
MVI 217	250	687.5	–	979.0	–	217	–	141	–	51
MVI 220	250	759.5	–	1051.0	–	217	–	141	–	48
MVI 402	250	321.5	544.0	545.0	140	130	107	121	19.6	20
MVI 403	250	331.5	546.5	575.0	162	146	121	127	21.8	22
MVI 404	250	355.5	570.5	599.0	162	146	121	127	24.2	27
MVI 405	250	379.5	594.5	623.0	162	146	121	127	24.8	27
MVI 406	250	413.5	658.5	692.0	182	193	131	149	33.6	35
MVI 407	250	437.5	682.5	716.0	182	193	131	149	34.3	35
MVI 408	250	461.5	–	740.0	–	193	–	149	–	36
MVI 410	250	509.5	–	788.0	–	193	–	149	–	37
MVI 412	250	567.5	–	859.0	–	217	–	141	–	48
MVI 414	250	615.5	–	907.0	–	217	–	141	–	49
MVI 417	250	687.5	–	979.0	–	217	–	141	–	46

Dimensions, weights Wilo-Multivert MVI 1/2/4/8/16..-6

Dimensions, weights - Version PN 25 round flange

Wilo-Multivert...	Dimensions								Weight approx.	
			1~ 230V	3~ 400V	1~ 230V	3~ 400V	1~ 230V	3~ 400V	1~ 230V	3~ 400V
	E	h_2	*H*		*Ø M*		*X*		*m*	
	mm								kg	
MVI 419	250	759.5	–	1051.0	–	217	–	141	–	48
MVI 802	280	333.5	548.5	577.0	162	146	121	127	23	24
MVI 803	280	363.5	578.5	607.0	162	146	121	127	25.4	28
MVI 804	280	403.5	648.5	682.0	182	193	131	149	34.4	35
MVI 805	280	433.5	–	712.0	–	193	–	149	–	36
MVI 806	280	463.5	–	742.0	–	193	–	149	–	37
MVI 807	280	503.5	–	795.0	–	217	–	141	–	46
MVI 808	280	533.5	–	825.0	–	217	–	141	–	47
MVI 810	280	593.5	–	885.0	–	217	–	141	–	47
MVI 811	280	653.5	–	945.0	–	217	–	141	–	45
MVI 812	280	653.5	–	981.0	–	220	–	160	–	58
MVI 814	280	713.5	–	1041.0	–	220	–	160	–	60
MVI 817	280	823.0	–	1218.0	–	279	–	182	–	89
MVI 819	280	883.0	–	1278.0	–	279	–	182	–	90
MVI 1602-6	300	369.5	–	648.0	–	193	–	149	–	30.4
MVI 1603-6	300	445.5	–	724.0	–	193	–	149	–	35.2
MVI 1604-6	300	455.5	–	747.0	–	217	–	141	–	40.3
MVI 1605-6	300	531.5	–	823.0	–	217	–	141	–	51.3
MVI 1606-6	300	531.5	–	823.0	–	217	–	141	–	51.7
MVI 1607-6	300	607.5	–	935.0	–	220	–	160	–	57.7
MVI 1608-6	300	607.5	–	935.0	–	220	–	160	–	59.4
MVI 1609-6	300	703.0	–	1098.0	–	279	–	182	–	80.4
MVI 1610-6	300	703.0	–	1098.0	–	279	–	182	–	80.8
MVI 1611-6	300	779.0	–	1174.0	–	279	–	182	–	82.8

[1]) Weight without packaging

Dimensions, weights - Version PN 25 Victaulic 3~400 V

Wilo-Multivert...	Dimensions					Weight approx.
	E	*H*	H_2	*Ø g*	*X*	*m*
	mm					kg
MVI 202	210	520.0	296.5	130	121	18.1
MVI 203	210	520.0	296.5	130	121	18.7
MVI 204	210	574.0	330.5	146	127	22.3
MVI 205	210	598.0	354.5	146	127	22.9
MVI 206	210	622.0	378.5	146	127	24.8
MVI 207	210	656.0	412.5	146	127	26.9
MVI 208	210	715.0	436.5	193	149	30.5
MVI 210	210	763.0	484.5	193	149	31.8
MVI 212	210	811.0	532.5	193	149	34.4
MVI 214	210	859.0	580.5	193	149	37.6
MVI 217	210	954.0	662.5	217	141	44.7
MVI 220	210	1026.0	734.5	217	141	55.6

Dimensions, weights Wilo-Multivert MVI 1/2/4/8/16..-6

Dimensions, weights - Version PN 25 Victaulic 3~400 V

Wilo-Multivert...	Dimensions					Weight approx.
	E	*H*	H_2	*Ø g*	*X*	*m*
	mm					kg
MVI 402	210	520.0	296.5	130	121	18.7
MVI 403	210	550.0	306.5	146	127	21.7
MVI 404	210	574.0	330.5	146	127	23.6
MVI 405	210	598.0	354.5	146	127	24.2
MVI 406	210	667.0	388.5	193	149	29.3
MVI 407	210	691.0	412.5	193	149	30.0
MVI 408	210	715.0	436.5	193	149	30.6
MVI 410	210	763.0	484.5	193	149	34.6
MVI 412	210	834.0	542.5	217	141	41.1
MVI 414	210	882.0	590.5	217	141	42.3
MVI 417	210	954.0	662.5	217	141	53.8
MVI 419	210	1026.0	734.5	217	141	55.7
MVI 802	261	577.0	333.5	146	127	22.9
MVI 803	261	607.0	363.5	146	127	24.8
MVI 804	261	682.0	403.5	193	149	30.1
MVI 805	261	712.0	433.5	193	149	31.6
MVI 806	261	742.0	463.5	193	149	34.3
MVI 807	261	795.0	503.5	217	141	39.7
MVI 808	261	825.0	533.5	217	141	40.4
MVI 810	261	885.0	593.5	217	141	51.2
MVI 811	261	945.0	653.5	217	141	52.7
MVI 812	261	981.0	653.5	220	160	57.0
MVI 814	261	1041.0	713.5	220	160	58.4
MVI 817	261	1218.0	823.0	279	182	80.3
MVI 819	261	1278.0	883.0	279	182	81.7

Pump curves Wilo-Multivert MVI 16/32/52

Wilo-Multivert MVI 1602 - 1614

2-pole, 50 Hz

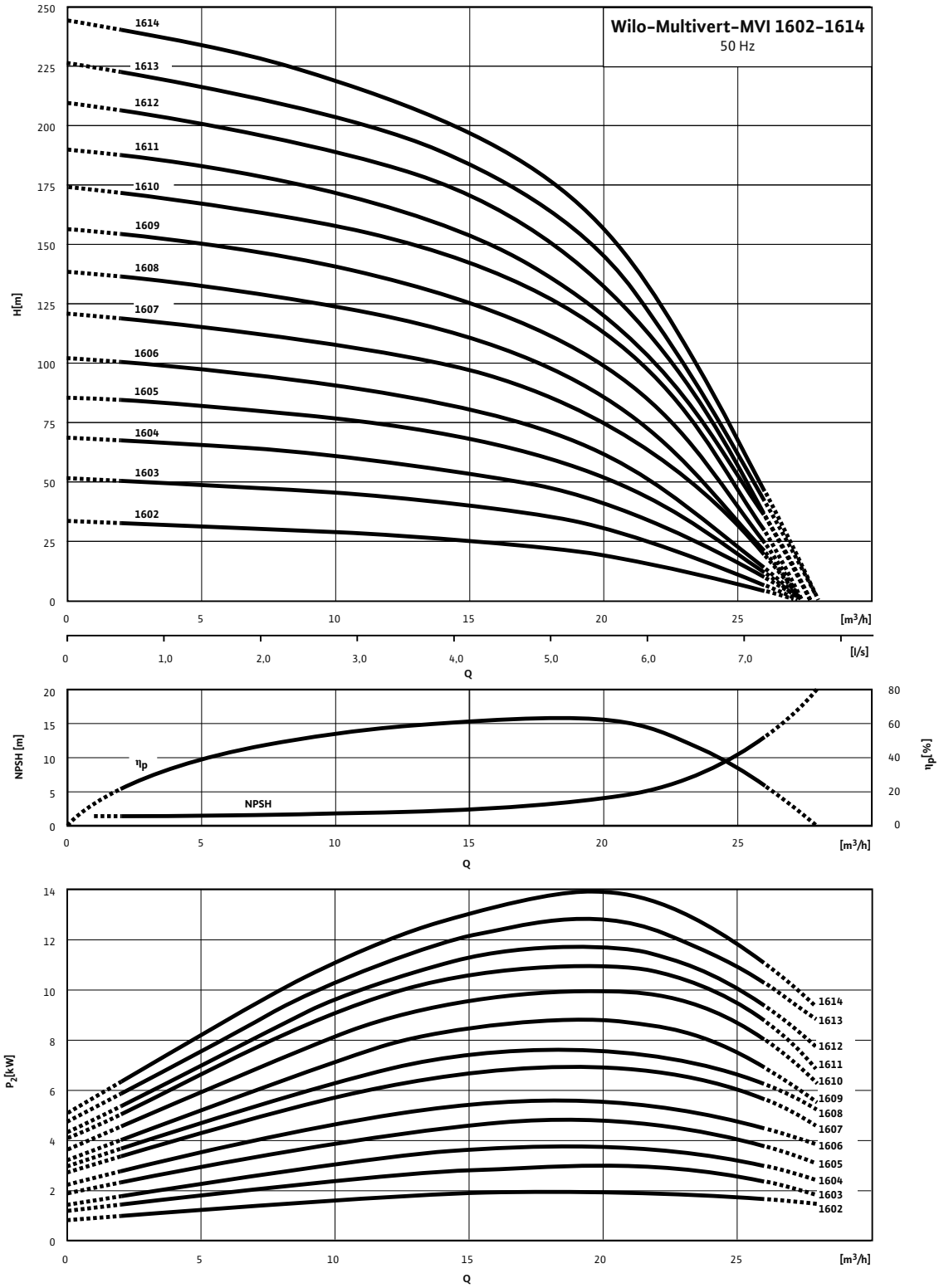

Pump curves in accordance with ISO 9906, class 2

Pump curves Wilo-Multivert MVI 16/32/52

Wilo-Multivert MVI 3202 - 3213 C

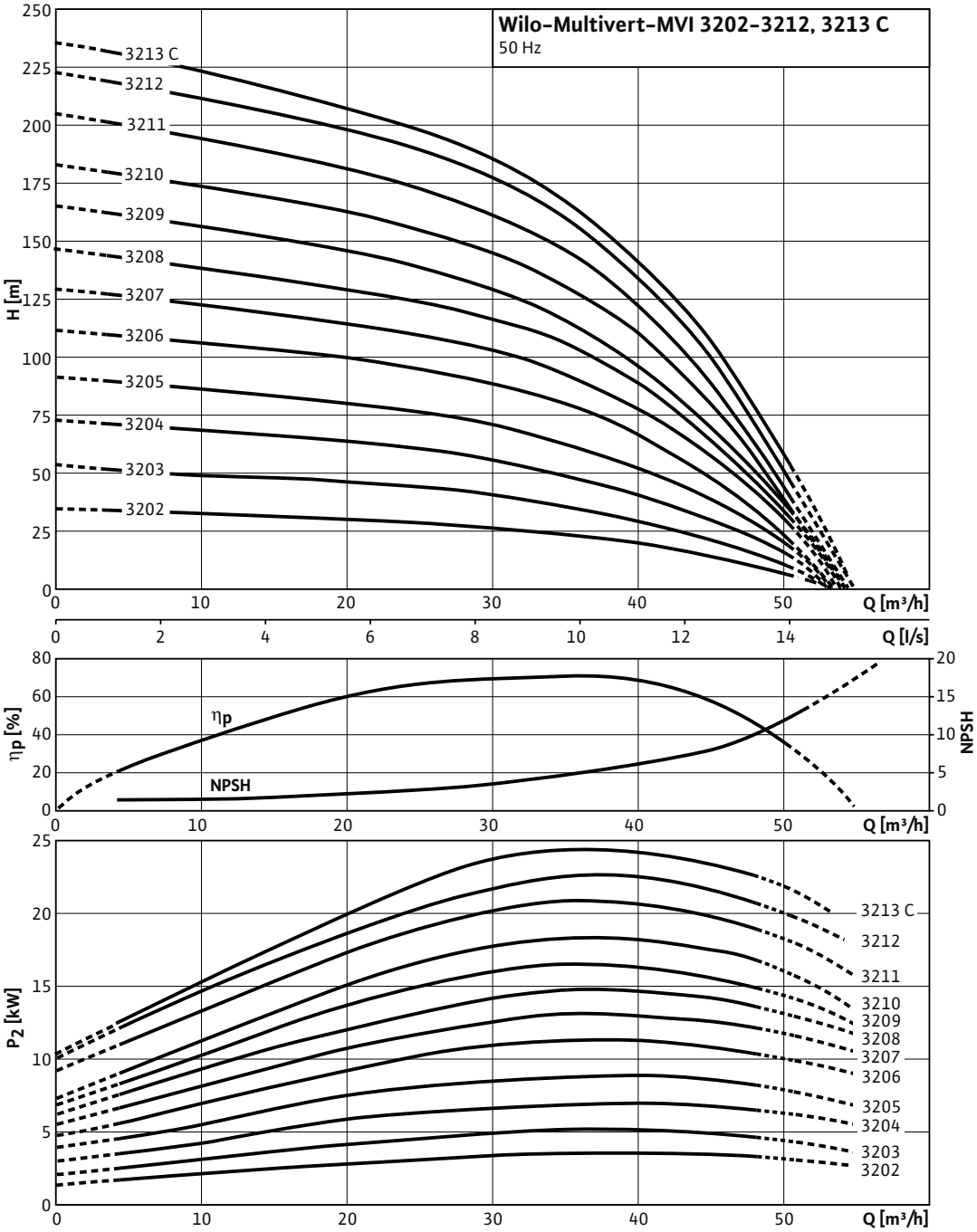

Pump curves in accordance with ISO 9906, class 2

Pump curves Wilo-Multivert MVI 16/32/52

Wilo-Multivert MVI 5202 - 5212 C

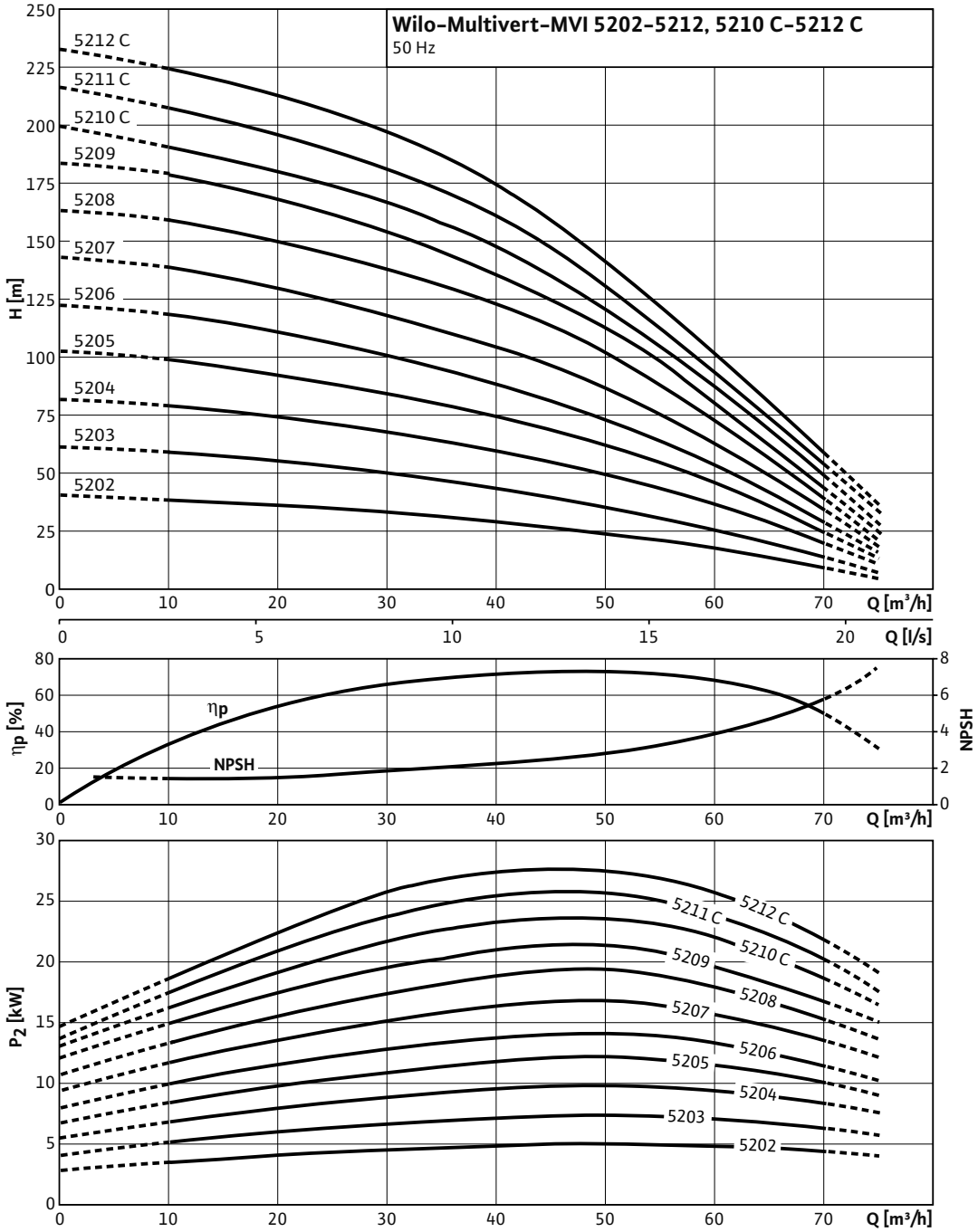

Pump curves in accordance with ISO 9906, class 2

Terminal diagram, motor data Wilo-Multivert MVI 16/32/52

Electrical connection

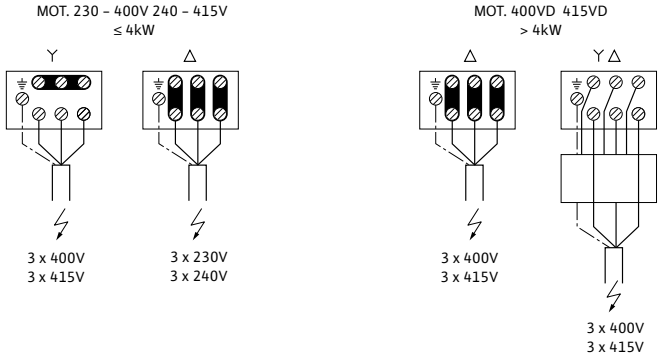

Motor data			
Wilo-Multivert...	**Nominal motor power**	**Nominal current 3~230 V, 50 Hz**	**Nominal current 3~400 V, 50 Hz**
	P_2	I_N	
	kW	A	
MVI 1602	2.20	7.8	4.4
MVI 1603	3.00	10.4	5.8
MVI 1604	4.00	13.7	7.7
MVI 1605	5.50	–	10.6
MVI 1606	5.50	–	10.6
MVI 1607	7.50	–	14.0
MVI 1608	7.50	–	14.0
MVI 1609	9.00	–	16.3
MVI 1610	11.00	–	20.2
MVI 1611	11.00	–	20.2
MVI 1612	15.00	–	26.2
MVI 1613	15.00	–	26.2
MVI 1614	15.00	–	26.2
MVI 3202	4.00	14.9	7.7
MVI 3203	5.50	–	10.6
MVI 3204	7.50	–	14.0
MVI 3205	9.00	–	16.3
MVI 3206	11.00	–	20.2
MVI 3207	15.00	–	26.2
MVI 3208	15.00	–	26.2
MVI 3209	18.50	–	32.0
MVI 3210	18.50	–	32.0
MVI 3211	22.00	–	37.5
MVI 3212	22.00	–	37.5
MVI 3213	30.00	–	52.5
MVI 5202	5.50	–	10.6
MVI 5203	7.50	–	14.0
MVI 5204	11.00	–	20.2
MVI 5205	15.00	–	26.2
MVI 5206	15.00	–	26.2
MVI 5207	18.50	–	32.0

Dimensions, weights Wilo-Multivert MVI 16/32/52

Dimension drawing

Wilo-Multivert MVI 1602 – 1614

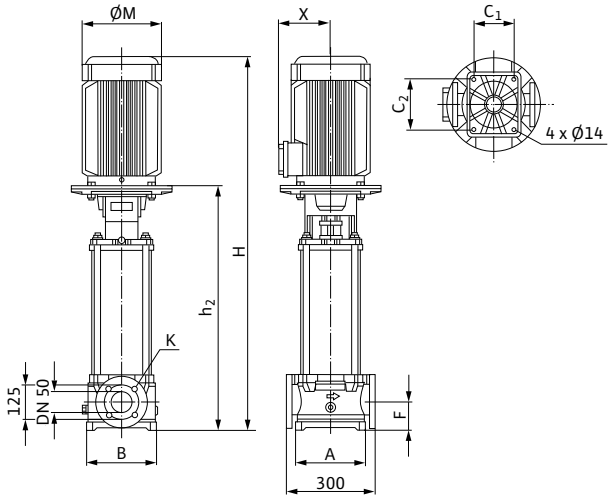

Dimension drawing

Wilo-Multivert MVI 3202 – 3213 C

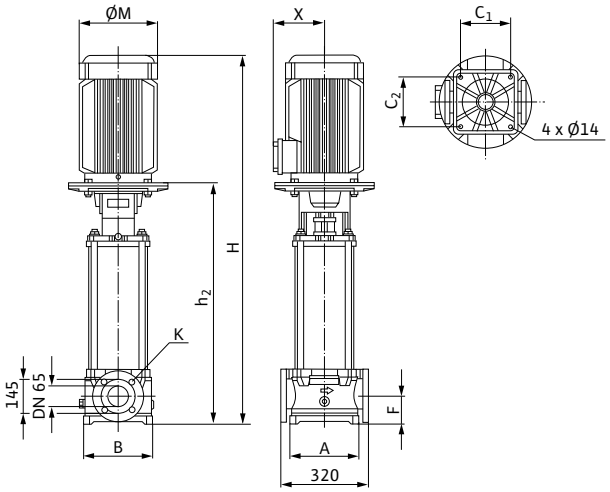

Dimension drawing

Wilo-Multivert MVI 3213 C

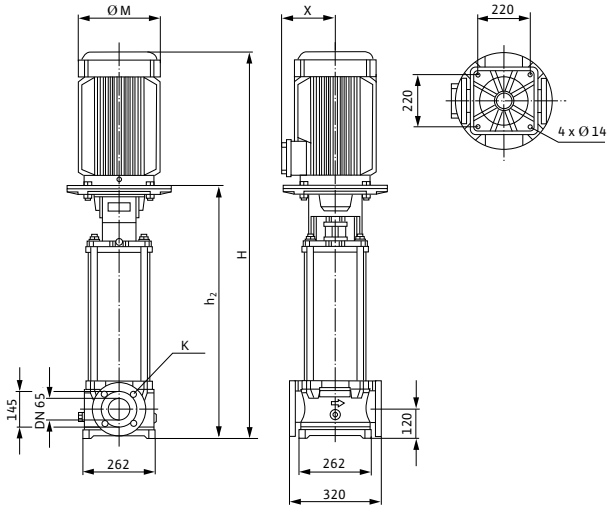

Dimension drawing

Wilo-Multivert MVI 5202 C – 5209 C

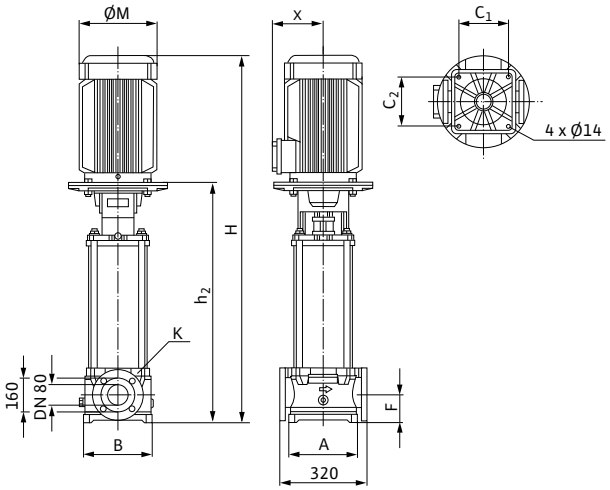

Dimensions, weights Wilo-Multivert MVI 16/32/52

Dimension drawing

Wilo-Multivert MVI 5210 C - 5212 C

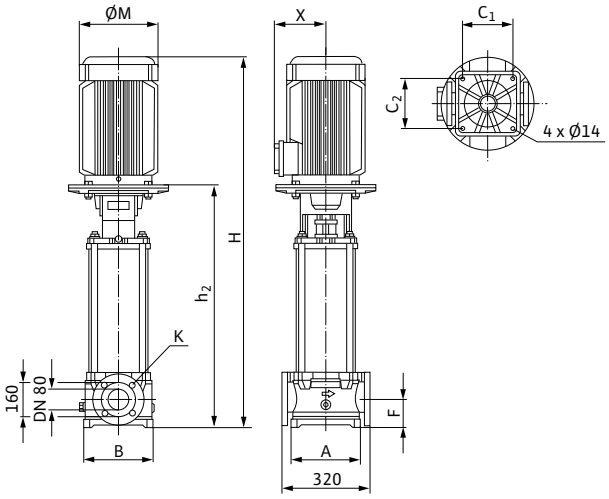

Dimensions, weights - Version PN 16											
Wilo-Multivert...	**Dimensions**										**Weight approx.**
	A	*B*	*C_1*	*C_2*	*F*	*H*	*h_2*	*Ø M*	*X*	*K_1*	*m*
	mm										kg
MVI 1602	194	252	130	215	90	698.0	419.0	193	149	4x18	58.0
MVI 1603	194	252	130	215	90	721.0	429.0	217	160	4x18	64.3
MVI 1604	194	252	130	215	90	755.0	463.5	217	141	4x18	75.3
MVI 1605	194	252	130	215	90	826.0	498.0	220	160	4x18	81.3
MVI 1606	194	252	130	215	90	860.0	532.5	220	160	4x18	83.3
MVI 1607	194	252	130	215	90	1016.0	621.5	279	182	4x18	107.0
MVI 1608	194	252	130	215	90	1016.0	621.5	279	182	4x18	107.3
MVI 3202	239	235	195	195	105	732.0	440.0	217	141	4x18	79.8
MVI 3203	239	235	195	195	105	814.0	486.0	220	160	4x18	86.3
MVI 3204	239	235	195	195	105	947.0	552.0	279	182	4x18	108.8
MVI 3205	239	235	195	195	105	1039.0	644.0	279	182	4x18	123.3
MVI 3206	239	235	195	195	105	1039.0	644.0	279	182	4x18	123.8
MVI 3207	239	235	195	195	105	1242.0	766.0	323	200	4x18	156.3
MVI 5202	260	260	220	220	105	800.0	472.5	220	160	8x18	88.5
MVI 5203	260	260	220	220	105	949.0	554.0	279	182	8x18	111.7
MVI 5204	260	260	220	220	105	1010.0	615.3	279	182	8x18	124.9
MVI 5205	260	260	220	220	105	1244.0	768.0	323	200	8x18	158.2
MVI 5206	260	260	220	220	105	1244.0	768.0	323	200	8x18	160.5
MVI 5207	260	260	220	220	105	1366.0	890.6	323	200	8x18	180.8

Dimensions, weights Wilo-Multivert MVI 16/32/52

Dimensions, weights – Version PN 25

Wilo-Multivert...	Dimensions										Weight approx.
	A	*B*	C_1	C_2	*F*	*H*	h_2	*Ø M*	*X*	K_1	*m*
	mm										kg
MVI 1602	194	252	130	215	90	698.0	419.0	193	149	4x18	58.0
MVI 1603	194	252	130	215	90	721.0	429.0	217	160	4x18	64.3
MVI 1604	194	252	130	215	90	755.0	463.5	217	141	4x18	75.3
MVI 1605	194	252	130	215	90	826.0	498.0	220	160	4x18	81.3
MVI 1606	194	252	130	215	90	860.0	532.5	220	160	4x18	83.3
MVI 1607	194	252	130	215	90	1016.0	621.5	279	182	4x18	107.0
MVI 1608	194	252	130	215	90	1016.0	621.5	279	182	4x18	107.3
MVI 1609	194	252	130	215	90	1085.0	690.5	279	182	4x18	121.4
MVI 1610	194	252	130	215	90	1086.0	690.5	279	182	4x18	121.7
MVI 1611	194	252	130	215	90	1155.0	759.5	279	182	4x18	125.4
MVI 1612	194	252	130	215	90	1265.0	789.5	323	200	4x18	153.7
MVI 1613	194	252	130	215	90	1334.0	858.5	323	200	4x18	157.4
MVI 1614	194	252	130	215	90	1334.0	858.5	323	200	4x18	157.7
MVI 3202	262	260	220	220	120	747.0	455.0	217	141	8x18	83.8
MVI 3203	262	260	220	220	120	829.0	501.0	220	160	8x18	90.3
MVI 3204	262	260	220	220	120	962.0	567.0	279	182	8x18	112.8
MVI 3205	262	260	220	220	120	1054.0	659.0	279	182	8x18	127.3
MVI 3206	262	260	220	220	120	1054.0	659.0	279	182	8x18	127.8
MVI 3207	262	260	220	220	120	1257.0	781.0	323	200	8x18	160.3
MVI 3208	262	260	220	220	120	1257.0	781.0	323	200	8x18	160.8
MVI 3209	262	260	220	220	120	1303.0	827.0	323	200	8x18	178.9
MVI 3210	262	260	220	220	120	1441.0	965.0	323	200	8x18	185.4
MVI 3211	262	260	220	220	120	1484.0	965.0	370	248	8x18	209.9
MVI 3212	262	260	220	220	120	1484.0	965.0	370	248	8x18	210.4
MVI 3213	262	260	220	220	120	1730.0	1175.0	415	261	8x18	275.9
MVI 5202	260	260	220	220	105	872.0	472.0	279	160	8x18	88.5
MVI 5203	260	260	220	220	105	949.0	554.0	279	182	8x18	111.7
MVI 5204	260	260	220	220	105	1010.0	615.3	279	182	8x18	124.9
MVI 5205	260	260	220	220	105	1244.0	768.0	323	200	8x18	158.2
MVI 5206	260	260	220	220	105	1244.0	768.0	323	200	8x18	160.5
MVI 5207	260	260	220	220	105	1366.0	890.6	323	200	8x18	180.8
MVI 5208	260	260	220	220	105	1409.0	890.6	370	248	8x18	205.9
MVI 5209	260	260	220	220	105	1471.0	952.0	370	248	8x18	209.1
MVI 5210	260	260	220	220	105	1809.0	1254.0	415	261	8x18	277.5
MVI 5211	260	260	220	220	105	1809.0	1254.0	415	261	8x18	278.6
MVI 5212	260	260	220	220	105	1809.0	1254.0	415	261	8x18	279.7

Pump curves Wilo-Multivert MVI 70

Wilo-Multivert MVI 7001 - 7007

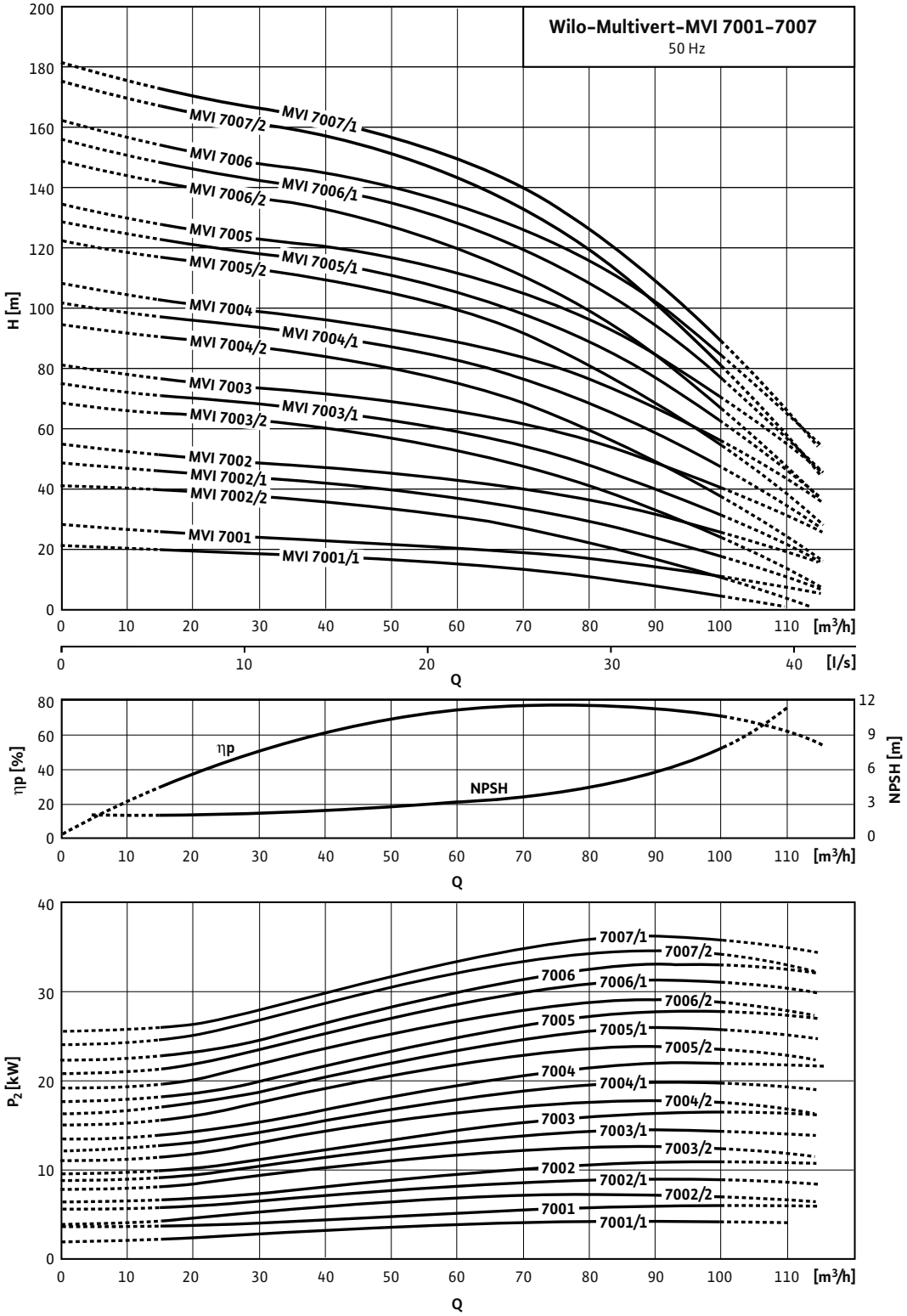

Pump curves in accordance with ISO 9906, class 2

Terminal diagram, motor data Wilo-Multivert MVI 70

Electrical connection

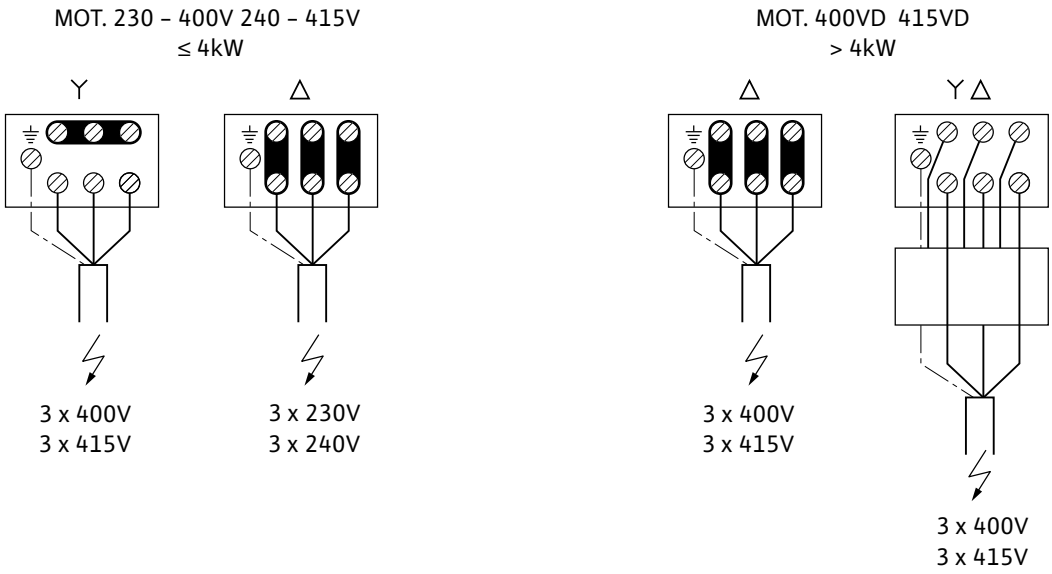

Motor data			
Wilo-Multivert...	**Nominal motor power**	**Nominal current 3~230 V, 50 Hz**	**Nominal current 3~400 V, 50 Hz**
	P_2	I_N	
	kW	A	
MVI 7001/1	4.00	13.8	7.7
MVI 7001	5.50	–	10.6
MVI 7002/2	7.50	–	14.0
MVI 7002/1	9.00	–	16.6
MVI 7002	11.00	–	20.2
MVI 7003/2	15.00	–	25.7
MVI 7003/1	15.00	–	25.7
MVI 7003	18.50	–	31.4
MVI 7004/2	18.50	–	31.4
MVI 7004/1	22.00	–	37.5
MVI 7004	22.00	–	37.5
MVI 7005/2	30.00	–	52.5
MVI 7005/1	30.00	–	52.5
MVI 7005	30.00	–	52.5
MVI 7006/2	30.00	–	52.5
MVI 7006/1	37.00	–	65.0
MVI 7006	37.00	–	65.0
MVI 7007/2	37.00	–	65.0
MVI 7007/1	37.00	–	65.0

Dimensions, weights Wilo-Multivert MVI 70

Dimension drawing

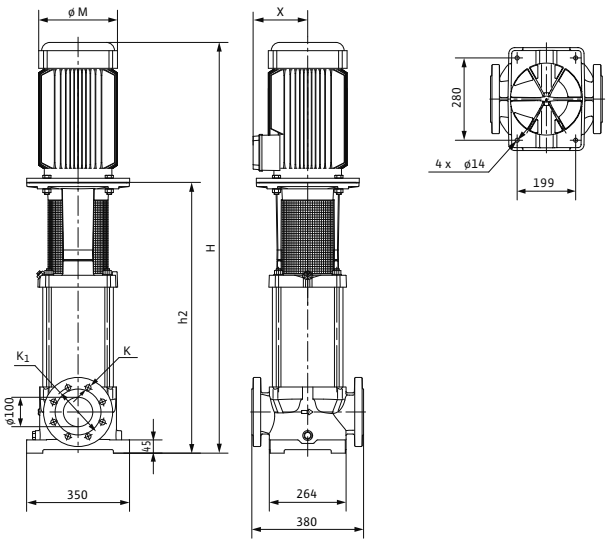

Dimensions, weights – Version PN 16							
Wilo-Multivert...	**Dimensions**						**Weight approx.**
	H	h_2	*Ø M*	*X*	*K*	K_1	*m*
	mm						kg
MVI 7001/1	831	539	217	141	180	8x19	102.0
MVI 7001	867	539	220	160	180	8x19	106.0
MVI 7002/2	1039	644	279	182	180	8x19	130.0
MVI 7002/1	1039	644	279	182	180	8x19	140.0
MVI 7002	1039	644	279	182	180	8x19	140.0
MVI 7003/2	1318	842	323	200	180	8x19	172.0
MVI 7003/1	1318	842	323	200	180	8x19	172.0
MVI 7003	1318	842	323	200	180	8x19	187.0
MVI 7004/2	1403	927	323	200	180	8x19	191.0
MVI 7004/1	1446	927	370	248	180	8x19	214.0
MVI 7004	1446	927	370	248	180	8x19	214.0
MVI 7005/2	1567	1012	415	261	180	8x19	265.0
MVI 7005/1	1567	1012	415	261	180	8x19	265.0
MVI 7005	1567	1012	415	261	180	8x19	265.0

Dimensions, weights Wilo-Multivert MVI 70

Dimensions, weights – Version PN 25

Wilo-Multivert...	Dimensions						Weight approx.
	H	h_2	*Ø M*	*X*	*K*	K_1	*m*
	mm						kg
MVI 7001/1	831	539	217	141	140	8x23	102.0
MVI 7001	867	539	220	160	140	8x23	106.0
MVI 7002/2	1039	644	279	182	140	8x23	130.0
MVI 7002/1	1039	644	279	182	140	8x23	140.0
MVI 7002	1039	644	279	182	140	8x23	140.0
MVI 7003/2	1318	842	323	200	140	8x23	172.0
MVI 7003/1	1318	842	323	200	140	8x23	172.0
MVI 7003	1318	842	323	200	140	8x23	187.0
MVI 7004/2	1403	927	323	200	140	8x23	191.0
MVI 7004/1	1446	927	370	248	140	8x23	214.0
MVI 7004	1446	927	370	248	140	8x23	214.0
MVI 7005/2	1567	1012	415	261	140	8x23	265.0
MVI 7005/1	1567	1012	415	261	140	8x23	265.0
MVI 7005	1567	1012	415	261	140	8x23	265.0
MVI 7006/2	1696	1097	415	261	140	8x23	269.0
MVI 7006/1	1652	1097	415	261	140	8x23	291.0
MVI 7006	1652	1097	415	261	140	8x23	291.0
MVI 7007/2	1737	1182	415	261	140	8x23	295.0
MVI 7007/1	1737	1182	415	261	140	8x23	295.0

Pump curves Wilo-Multivert MVI 95

Wilo-Multivert MVI 9501 - 9505

2-pole, 50 Hz

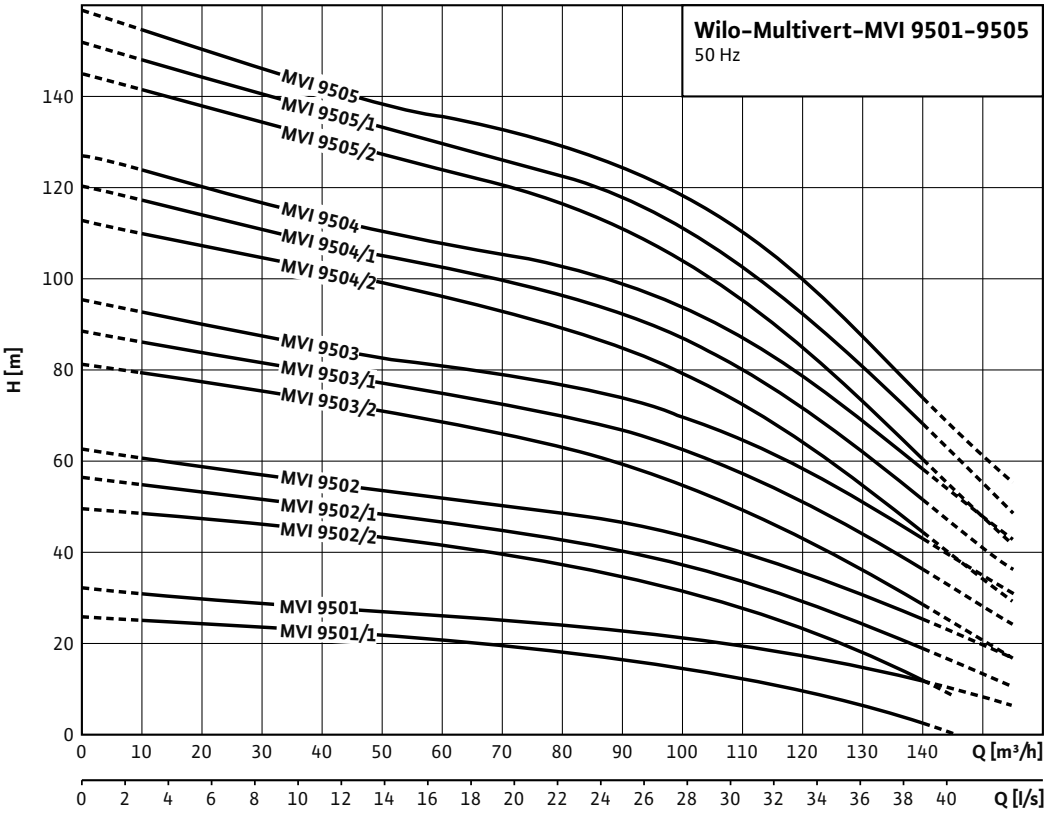

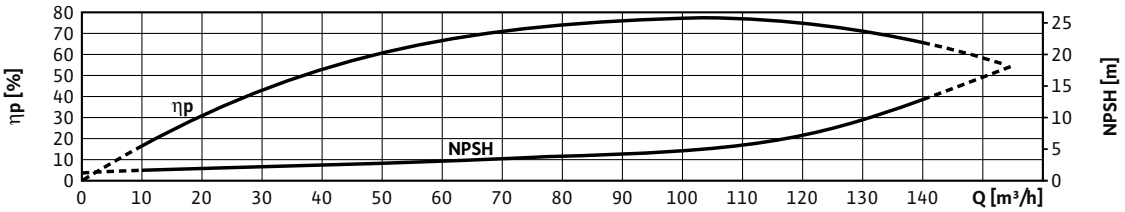

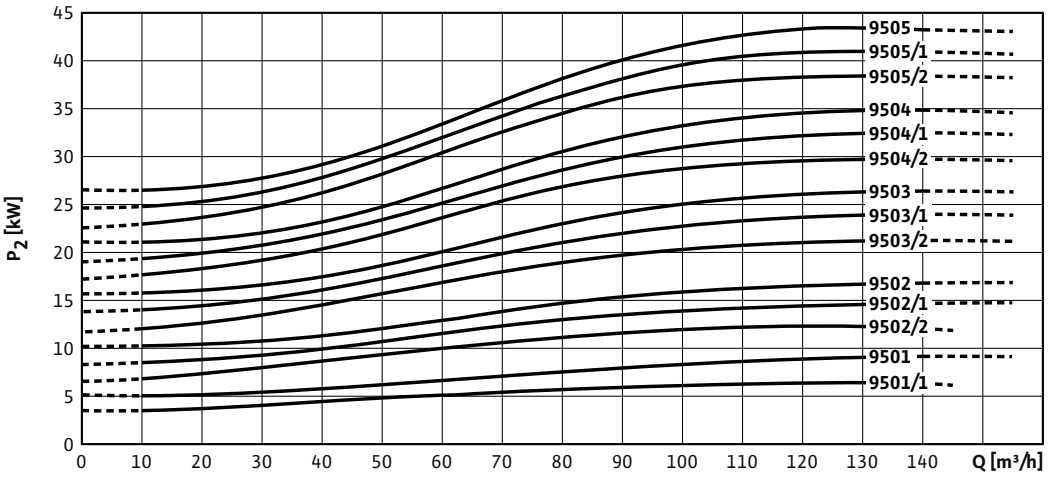

Pump curves in accordance with ISO 9906, class 2

Terminal diagram, motor data Wilo-Multivert MVI 95

Electrical connection

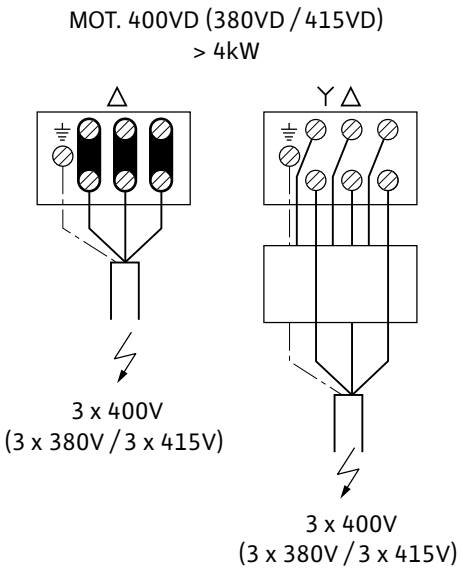

Motor data		
Wilo-Multivert...	**Nominal motor power**	**Nominal current 3~400 V, 50 Hz**
	P_2	I_N
	kW	A
MVI 9501/1	7.50	14.00
MVI 9501	9.00	16.60
MVI 9502/2	15.00	25.70
MVI 9502/1	15.00	25.70
MVI 9502	18.50	31.40
MVI 9503/2	22.00	37.50
MVI 9503/1	30.00	52.50
MVI 9503	30.00	52.50
MVI 9504/2	30.00	52.50
MVI 9504/1	37.00	65.00
MVI 9504	37.00	65.00
MVI 9505/2	45.00	82.10
MVI 9505/1	45.00	82.10
MVI 9505	45.00	82.10

Dimensions, weights Wilo-Multivert MVI 95

Dimension drawing

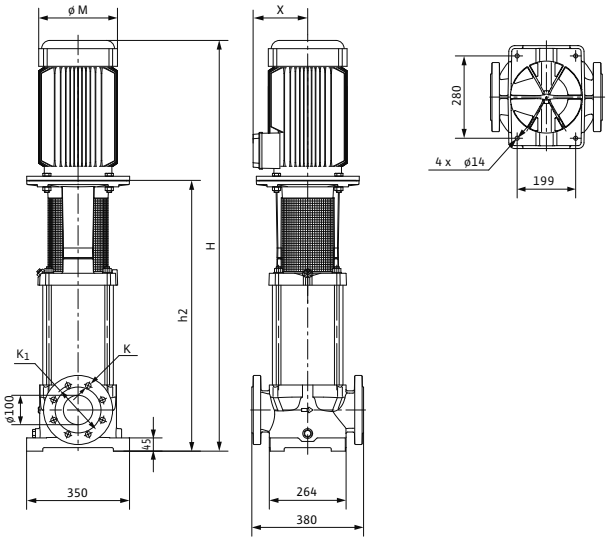

Dimensions, weights – Version PN 16							
Wilo-Multivert...	**Dimensions**						**Weight approx.**
	H	h_2	*Ø M*	*X*	*K*	K_1	*m*
	mm						kg
MVI 9501/1	967	572	279	182	180	8x19	115.0
MVI 9501	967	572	279	182	180	8x19	125.0
MVI 9502/2	1259	783	323	200	180	8x19	170.0
MVI 9502/1	1259	783	323	200	180	8x19	170.0
MVI 9502	1259	783	323	200	180	8x19	185.0
MVI 9503/2	1400	881	370	248	180	8x19	212.5
MVI 9503/1	1436	881	415	261	180	8x19	259.5
MVI 9503	1436	881	415	261	180	8x19	259.5
MVI 9504/2	1534	979	415	261	180	8x19	264.5
MVI 9504/1	1534	979	415	261	180	8x19	286.5
MVI 9504	1534	979	415	261	180	8x19	286.5

Dimensions, weights Wilo-Multivert MVI 95

Dimensions, weights – Version PN 25

Wilo-Multivert...	Dimensions						Weight approx.
	H	h_2	*Ø M*	*X*	*K*	K_1	*m*
	mm						kg
MVI 9501/1	967	572	279	182	190	8x23	126.0
MVI 9501	967	572	279	182	190	8x23	136.0
MVI 9502/2	1259	783	323	200	190	8x23	170.0
MVI 9502/1	1259	783	323	200	190	8x23	170.0
MVI 9502	1259	783	323	200	190	8x23	185.0
MVI 9503/2	1400	881	370	248	190	8x23	212.5
MVI 9503/1	1436	881	415	261	190	8x23	259.5
MVI 9503	1436	881	415	261	190	8x23	259.5
MVI 9504/2	1534	979	415	261	190	8x23	264.5
MVI 9504/1	1534	979	415	261	190	8x23	286.5
MVI 9504	1534	979	415	261	190	8x23	286.5
MVI 9505/2	1702	1077	456	260	190	8x23	321.0
MVI 9505/1	1702	1077	456	260	190	8x23	321.0
MVI 9505	1702	1077	456	260	190	8x23	321.0

Series description Wilo-Multivert MVISE

Design
Non-self-priming multistage pump with glandless pump motor and integrated frequency converter

Application
- Water supply and pressure boosting

Type key

Example:	**MVISE 402-1/16/E/3-2/2G**
MVISE	Multistage vertical high-pressure centrifugal pump in glandless pump technology
4	Volume flow in m^3/h
02	Number of impellers
1	Material 1 = 1.4301 (AISI 304)
16	Nominal pressure in bar
E	Gasket type E = EPDM
3	1 = 1~ (single-phase current) 3 = 3~ (three-phase current)
2	Number of poles
2G	Frequency converter, second generation

Special features/product benefits
- Easy commissioning
- Glandless pump technology
- Low-noise (up to 20 dB [A] quieter than conventional pumps)
- Integrated frequency converter
- All parts that come in contact with the fluid are made of stainless steel 1.4301 (AISI 304)
- All relevant components are KTW- and WRAS-certified

Technical data
- Mains connection 3~400 V/50 Hz
- Fluid temperature -15 to +50 °C
- Max. operating pressure 16 bar
- Max. inlet pressure 10 bar
- Protection class IP 44
- Nominal diameters of pipe connections Rp 1, Rp 1¼ or Rp 1½

Materials
- Impellers and stage chambers
- stainless steel 1.4301/1.4404 (MVI 16-6 only in 1.4301)
- Pump housing stainless steel 1.4301 / 1.4404
- Shaft, depending on type, stainless steel 1.4301 / 1.4404
- Seal EPDM (EP 851) / Viton
- Housing cover stainless steel 1.4301 / 1.4404
- Lower housing section stainless steel 1.4301 / 1.4404
- Mechanical seal B-carbon/tungsten carbide, SiC/carbon
- Pressure shroud stainless steel 1.4301 / 1.4404
- Bearing tungsten carbide
- Pump base EN-GJL-250

Scope of delivery
- Pump
- Oval counter flanges Rp 1 to Rp 1 1/2 (only with PN 16 version)
- Installation and operating instructions

Version overview Wilo-Multivert MVISE

	Wilo-Multivert MVISE-2G
Materials	
Pump base EN-GJL-250 with cataphoretic coating, hydraulics in 1.4301/1.4404 (AISI 304/316L)	•
Parts in contact with fluid in 1.4301 (AISI 304)	•
Parts in contact with fluid in 1.4404 (AISI 316L)	–
Seal version	
Seal	EPDM
Hydraulic connection	
Threaded connection	–
Oval flange	•
Round flange	–
Victaulic quick coupling	•
Motor version	
3~230 V, 50 Hz	–
3~400 V, 50 Hz	•
Individual motors for special voltages, 50 Hz or 60 Hz	optional
3~230 V, 50 Hz	–
Protection class	IP 44
Explosion protection	–
Motors with PTC thermistors	–
Motors with UL certificates	optional
Motors with CSA certificates	optional
Thermal motor protection switch (EM version)	–
Speed can be controlled via external FC	–
Integrated frequency converter	–
Painting	
Individual painting	•
Potable water approvals	
KTW	•
WRAS	•

• = available, – = not available

Technical data Wilo-Multivert MVISE

	Wilo-Multivert MVISE-2G		
	2..	4..	8..
Approved fluids			
Potable water, heating water, process water	•	•	•
Condensate	–	–	–
Water/glycol mixtures (max. 40 %; with admixtures exceeding 10 %, the pumping data must be checked)	•	•	•
Other low viscous fluids (without abrasive or long-fibre constituents, provided they do not corrode the materials used)	–	–	–
Power			
Max. volume flow	3.0 m^3/h	5.0 m^3/h	8.0 m^3/h
Max. delivery head	66 m	67 m	68 m
Fluid temperature	-10 ... 50 °C	-10 ... 50 °C	-10 ... 50 °C
Max. ambient temperature	40 °C	40 °C	40 °C
Operating pressure	10 bar	10 bar	10 bar
Max. inlet pressure	6 bar	6 bar	6 bar
Nominal speed	2900 rpm	2900 rpm	2900 rpm
Motor			
Mains connection 1~ (permitted voltage tolerance +/- 10%)	–		
Mains connection 3~ (permitted voltage tolerance +/- 10%)	400 V, 50 Hz Y or 400 V, 60 Hz Y		
Insulation class	F	F	F
Emitted interference	EN 50081-1		
Interference resistance	EN 50082-2	EN 50082-2	EN 50082-2
Protection class	IP 44	IP 44	IP 44
Connections			
Nominal diameter of pipe connections on suction side	1	1	1¼
Nominal diameter of pipe connections on pressure side	1	1	1
Flange connections PN 16/PN 25	–	–	–
Victaulic connections	–	–	–
Materials			
Impeller	1.4301		
Stage chambers	1.4301		
Pump housing	1.4301		
Pump shaft	1.4122		
Seal	EPDM		
Housing cover	1.4301/1.4404		
Lower housing section	1.4301		
Mechanical seal	–		
Pressure shroud	1.4301		
Bearing	Carbon, synthetic resin impregnated		

• = available, - = not available

Note on inlet pressure
The maximum inlet pressure is calculated by subtracting the maximum delivery head of the pump at Q= 0 from the maximum operating pressure of the system.

Note on materials
1.4301 corresponds to AISI 304, 1.4404 corresponds to AISI 316L.

Pump curves Wilo-Multivert MVISE

Wilo-Multivert MVISE 206-2G

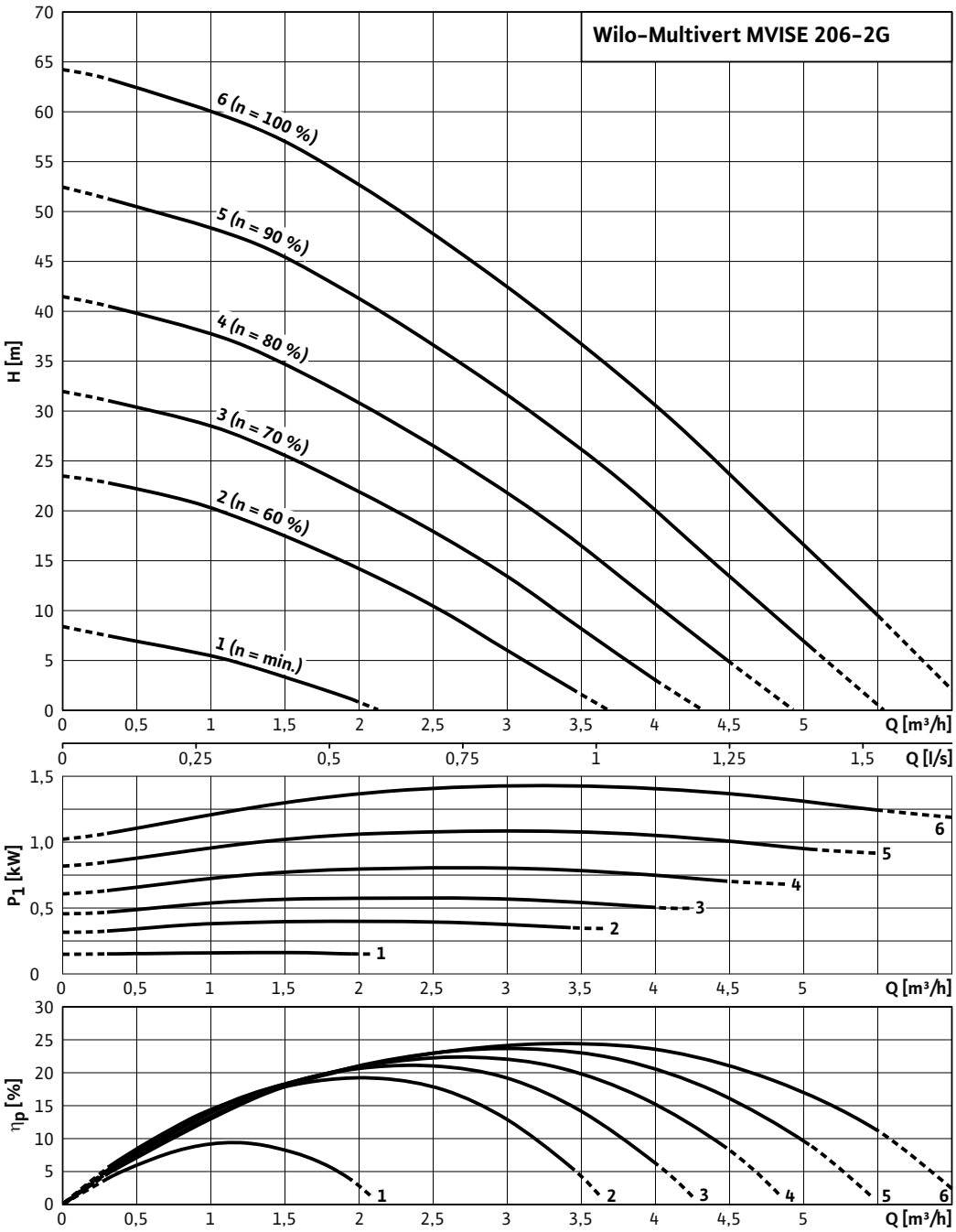

Pump curves in accordance with ISO 9906, class 2

Pump curves Wilo-Multivert MVISE

Wilo-Multivert MVISE 210-2G

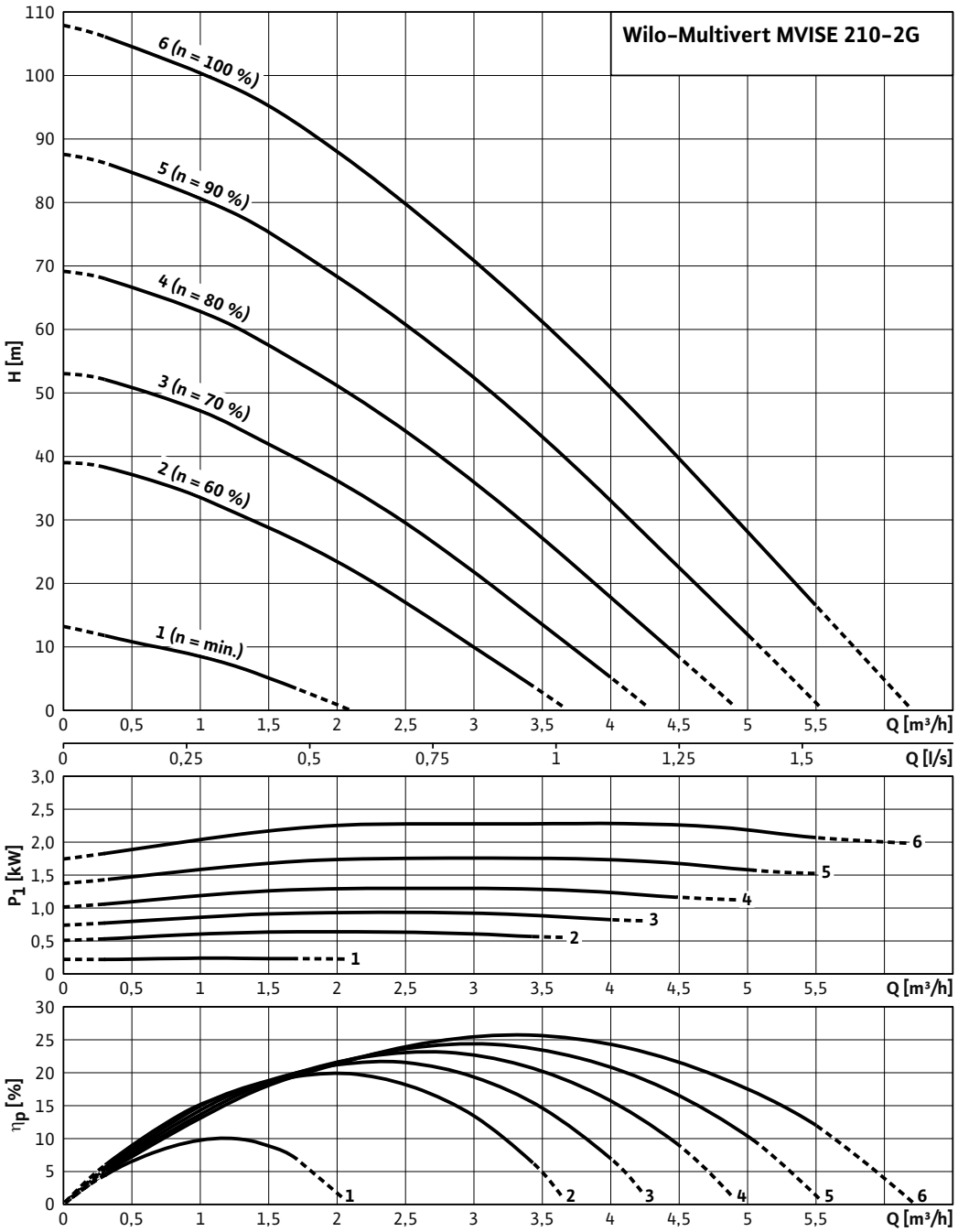

Pump curves in accordance with ISO 9906, class 2

Pump curves Wilo-Multivert MVISE

Wilo-Multivert MVISE 404-2G

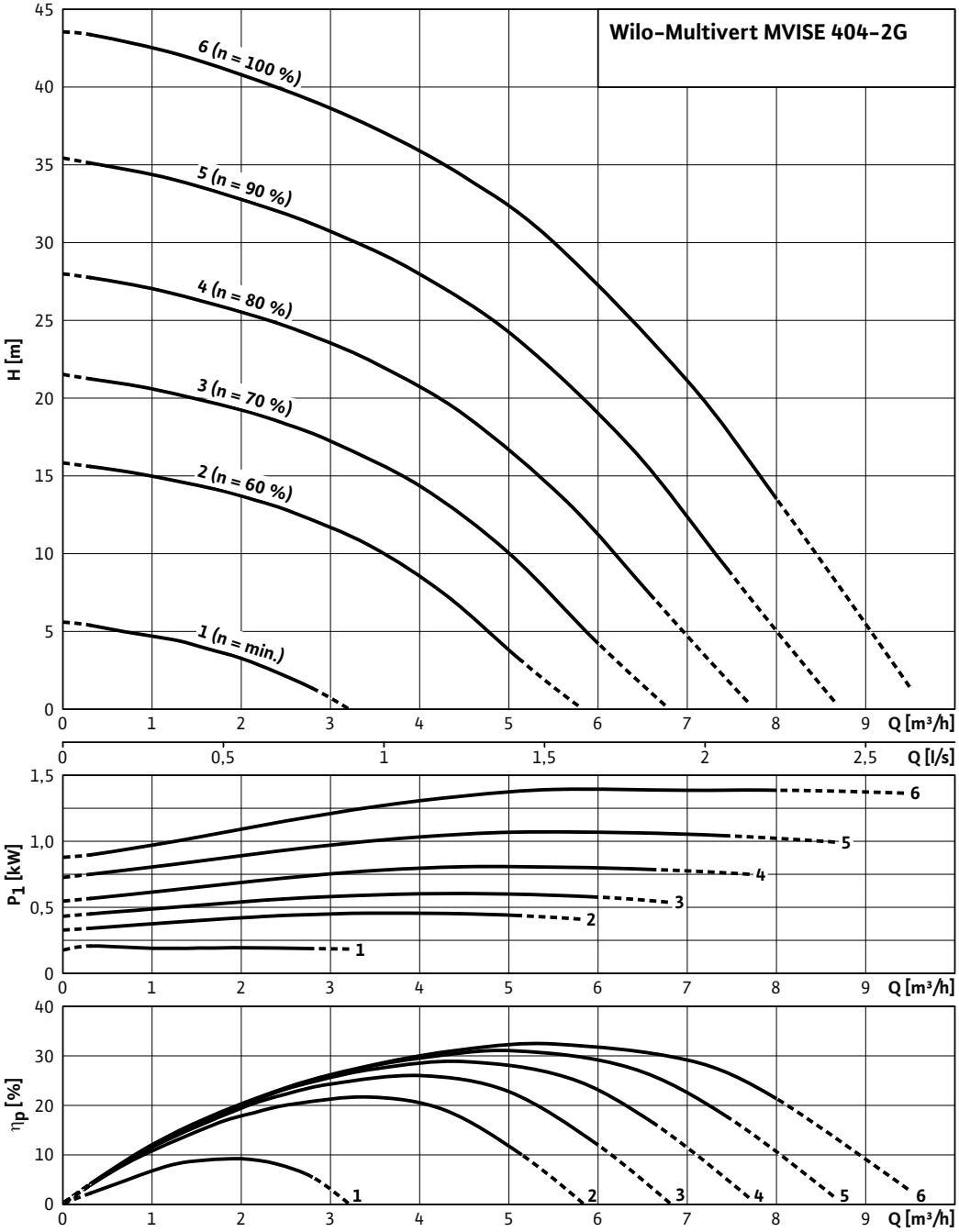

Pump curves in accordance with ISO 9906, class 2

Pump curves Wilo-Multivert MVISE

Wilo-Multivert MVISE 406-2G

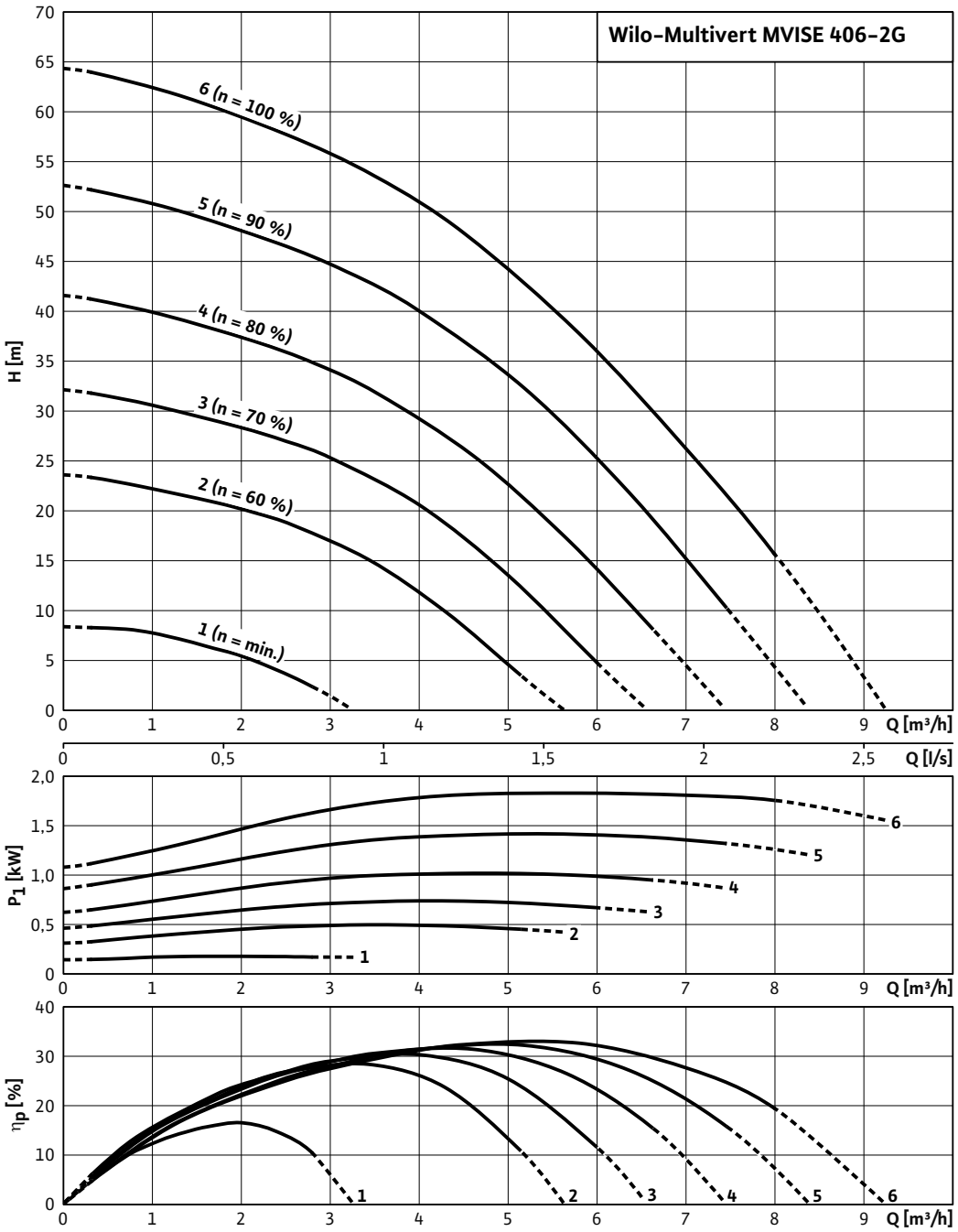

Pump curves in accordance with ISO 9906, class 2

Pump curves Wilo-Multivert MVISE

Wilo-Multivert MVISE 410-2G

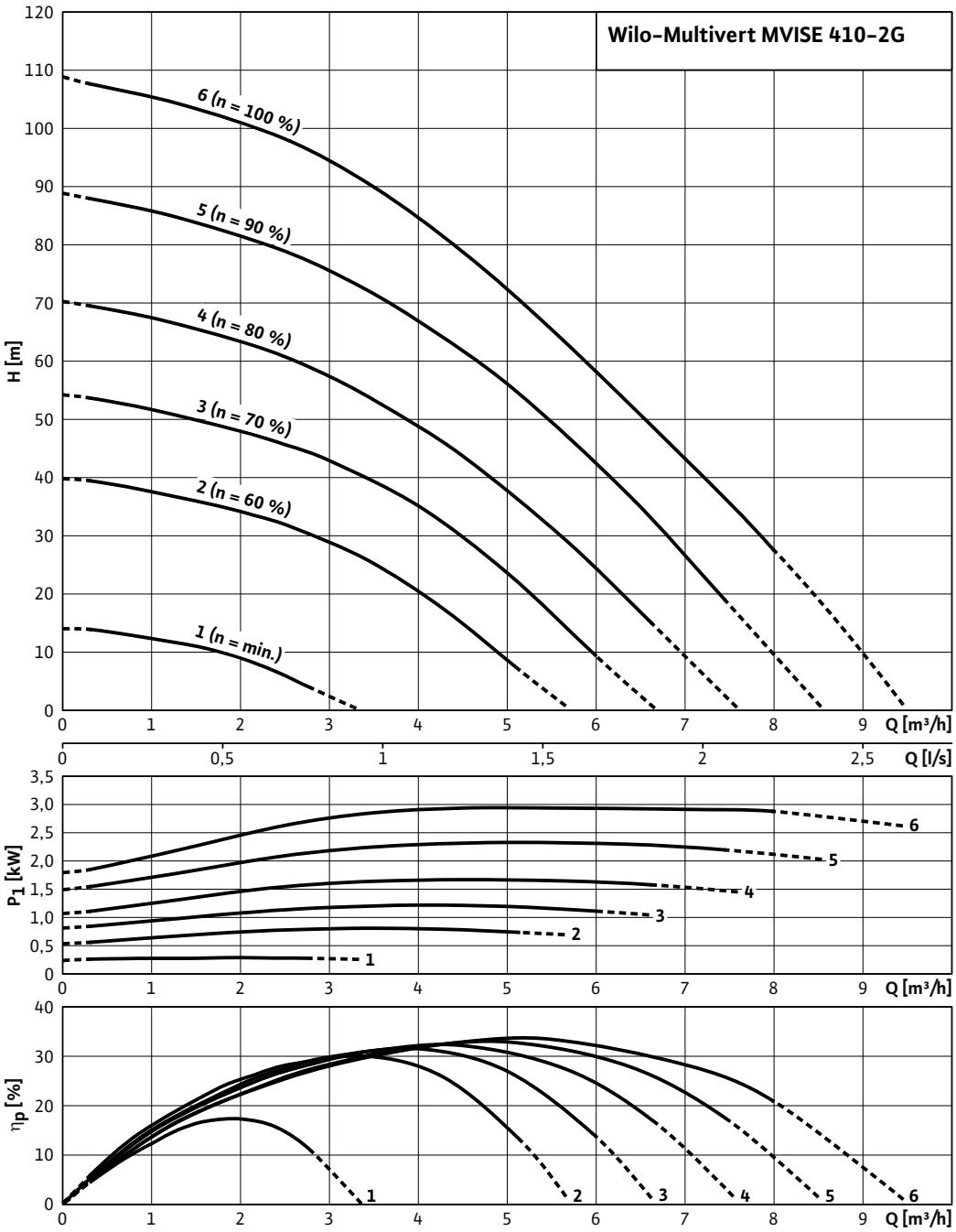

Pump curves in accordance with ISO 9906, class 2

Pump curves Wilo-Multivert MVISE

Wilo-Multivert MVISE 803-2G

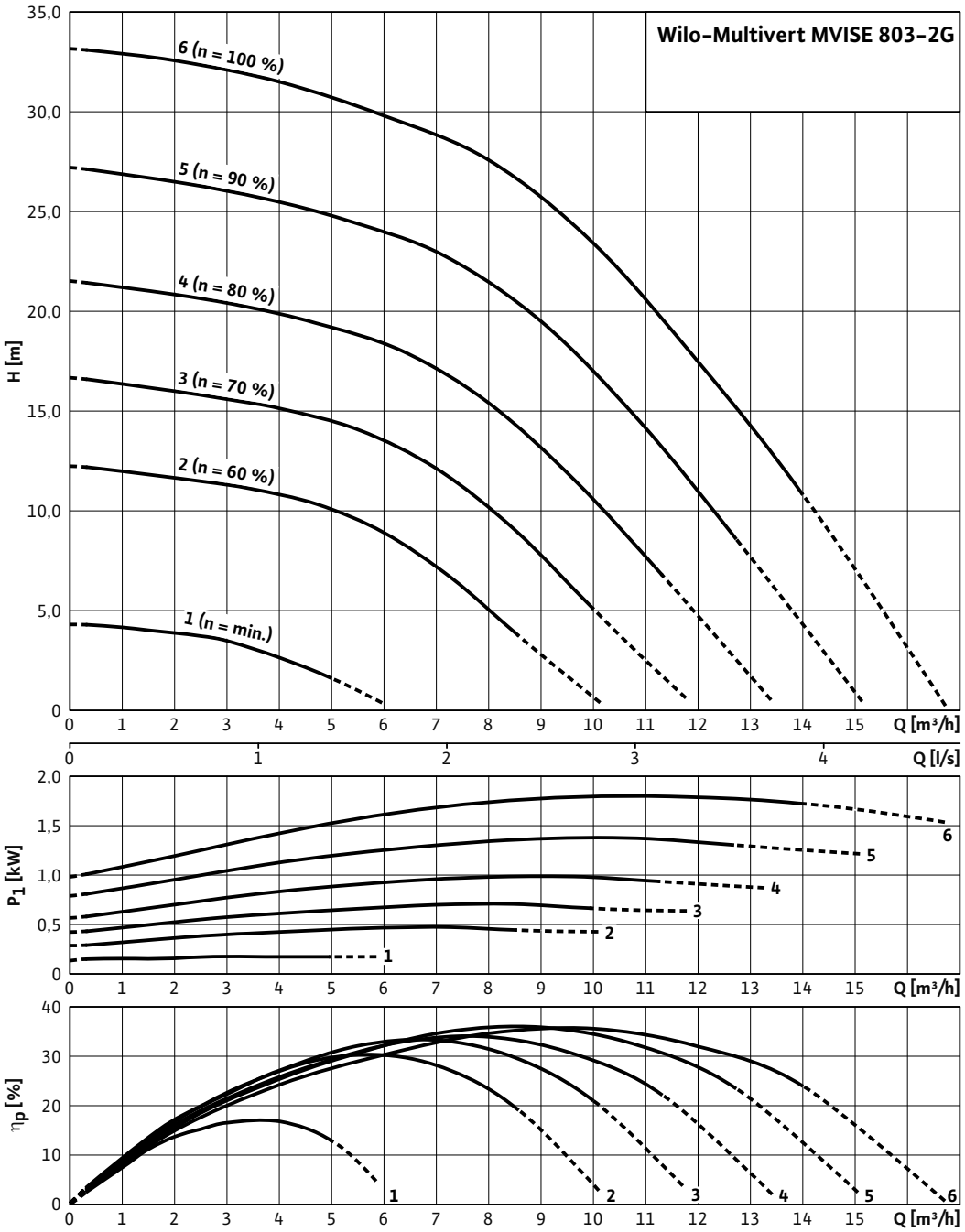

Pump curves in accordance with ISO 9906, class 2

Pump curves Wilo-Multivert MVISE

Wilo-Multivert MVISE 806-2G

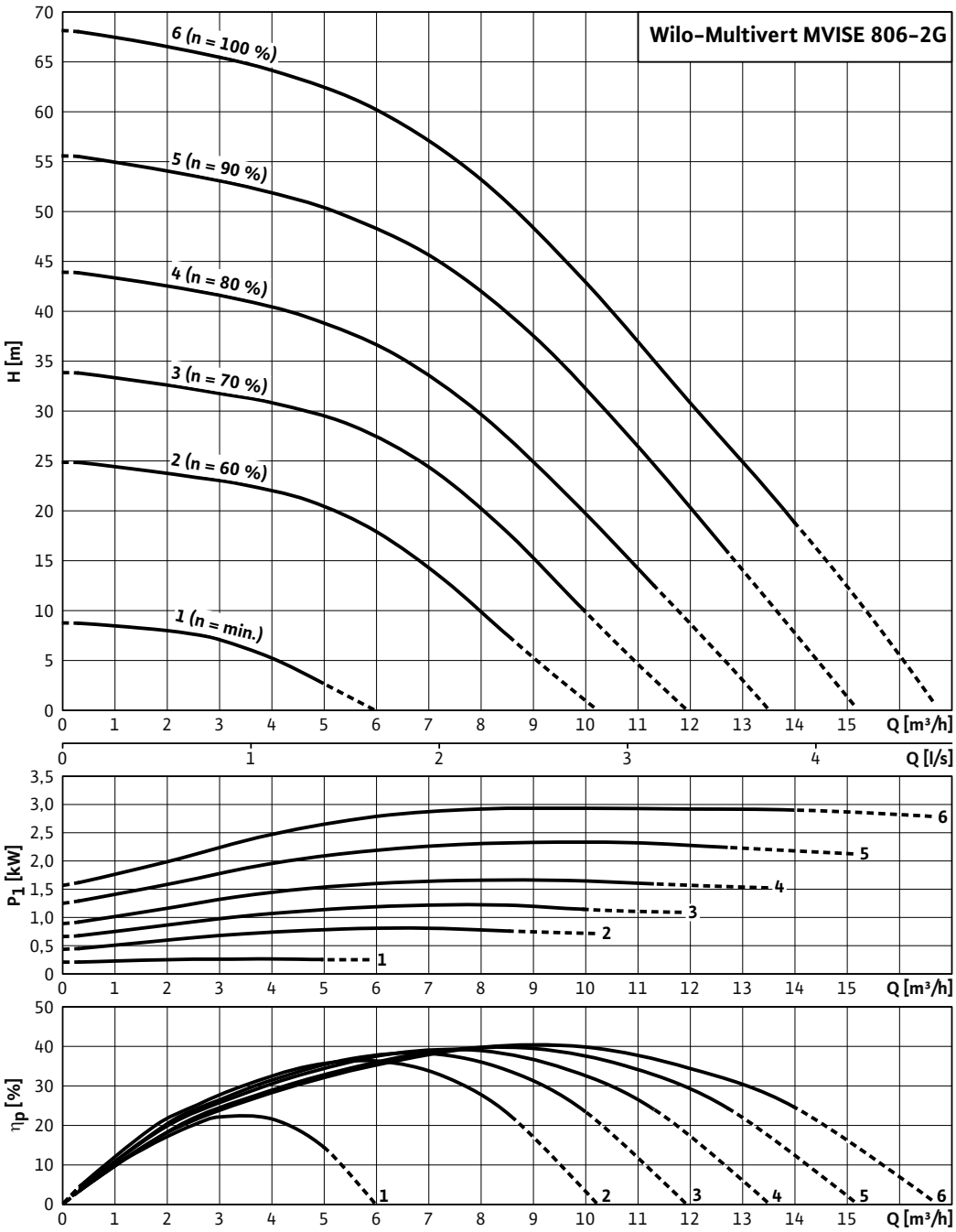

Pump curves in accordance with ISO 9906, class 2

Terminal diagram, motor data Wilo-Multivert MVISE

Electrical connection

3~400 V ≤7.5 kW

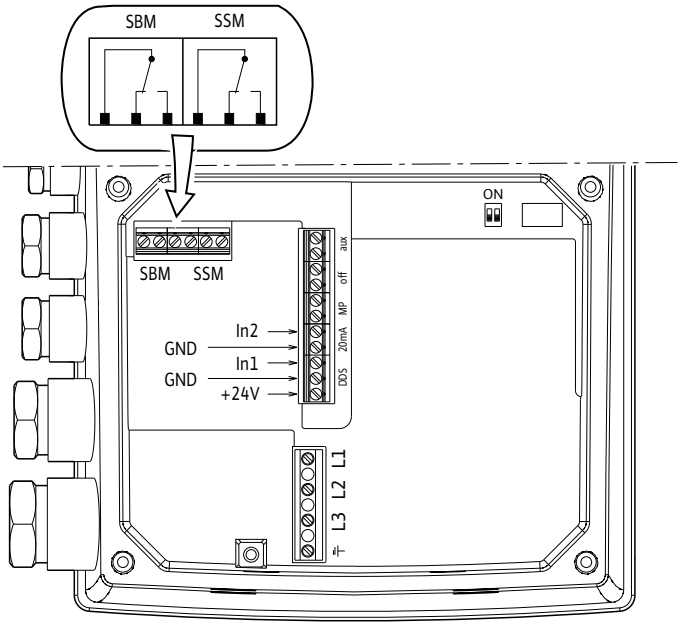

Motor data					
Wilo-Multivert...	**Frequency**	**Mains voltage**	**Nominal power**	**Nominal current 3~400 V, 50 Hz**	**Speed**
	f		P_1	I_N	*V*
	Hz		kW	A	rpm
MVISE 206-2G	50	3~400	1.42	4.20	2880
MVISE 210-2G	50	3~400	2.28	6.50	2870
MVISE 404-2G	50	3~400	1.40	4.20	2900
MVISE 406-2G	50	3~400	1.84	4.20	2780
MVISE 410-2G	50	3~400	2.95	6.50	2780
MVISE 803-2G	50	3~400	1.80	4.20	2840
MVISE 806-2G	50	3~400	2.93	6.50	2790

Dimensions, weights Wilo-Multivert MVISE

Dimension drawing

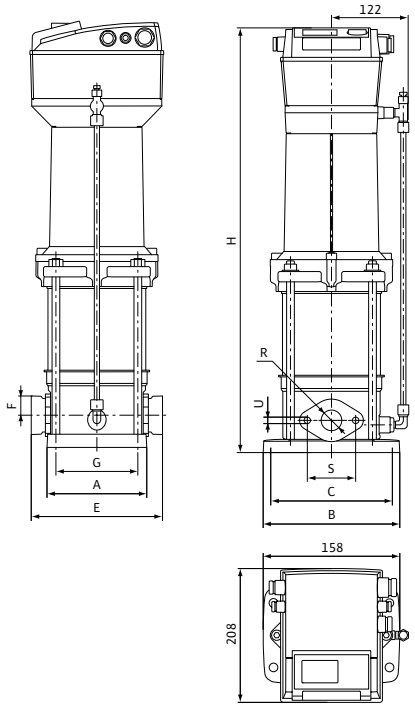

Dimensions, weights

Wilo-Multivert...	Dimensions										Weight approx.
	R	*A*	*B*	*C*	*E*	*F*	*G*	*H*	*S*	*U*	*m*
	Rp	mm									kg
MVISE 206-2G	1	160	212	180	204	50	100	630	75	M10	29.0
MVISE 210-2G	1	160	212	180	204	50	100	756	75	M10	35.0
MVISE 404-2G	1¼	160	212	180	204	50	100	582	75	M10	28.0
MVISE 406-2G	1¼	160	212	180	204	50	100	630	75	M10	29.0
MVISE 410-2G	1¼	160	212	180	204	50	100	756	75	M10	35.0
MVISE 803-2G	1½	200	252	215	248	80	130	615	100	M12	30.0
MVISE 806-2G	1½	200	252	215	248	80	130	735	100	M12	35.0

Pressure boosting

Single pumps

Series description Wilo-Multivert MVIS

Design
Non-self-priming multistage pump with glandless pump motor

Application
- Water supply and pressure boosting systems

Type key

Example:	**MVIS 402-1/16/E/3-400-50-2**
MVIS	Multistage vertical high-pressure centrifugal pump in glandless pump technology
4	Volume flow in m^3/h
02	Number of impellers
1	Material 1 = 1.4301 (AISI 304)
16	Nominal pressure in bar
K	Seal type EPDM
3	3 = 3~ (three-phase current)
400	Connection voltage in V
50	Frequency in Hz
2	Number of poles

Special features/product advantages
- Low-noise (up to 20 dB [A] quieter than conventional pumps)
- All parts that come in contact with the fluid are made of stainless steel 1.4301 (AISI 304)
- Glandless pump technology
- All relevant components are KTW- and WRAS-certified

Equipment/function
- Multistage, non-self-priming, vertical high-pressure centrifugal pump in in-line design.
- Glandless three-phase motor
- Hydraulic connection with oval flanges PN 16. Mating flanges of grey cast iron with female thread, screws and gaskets (scope of delivery)

Technical data
- Mains connection 3~230 V (±10 %), 50 Hz (Δ), 220 V (±10 %), 60 Hz (Δ), 400 V (±10 %), 50 Hz (Y) or 380 V (±10 %), 60 Hz (Y)
- Fluid temperature -15 to +50 °C
- Max. operating pressure 16 bar
- Max. inlet pressure 10 bar
- Protection class IP 44
- Nominal diameters of pipe connections Rp 1, Rp 1¼ or Rp 1½, depending on type

Materials
- Impellers stainless steel 1.4301
- Stage chambers stainless steel 1.4301
- Pump housing stainless steel 1.4301
- Shaft stainless steel 1.4122
- Seal EPDM (EP 851)
- Lower housing section stainless steel 1.4301
- Pressure shroud stainless steel 1.4301
- Bearing carbon, synthetic resin impregnated
- Pump base EN-GJL-250

Scope of delivery
- Pump
- Oval counter flanges Rp 1 to Rp 1 ½
- Installation and operating instructions

Pump curves, motor data Wilo-Multivert MVIS

Wilo-Multivert MVIS 202 – 210

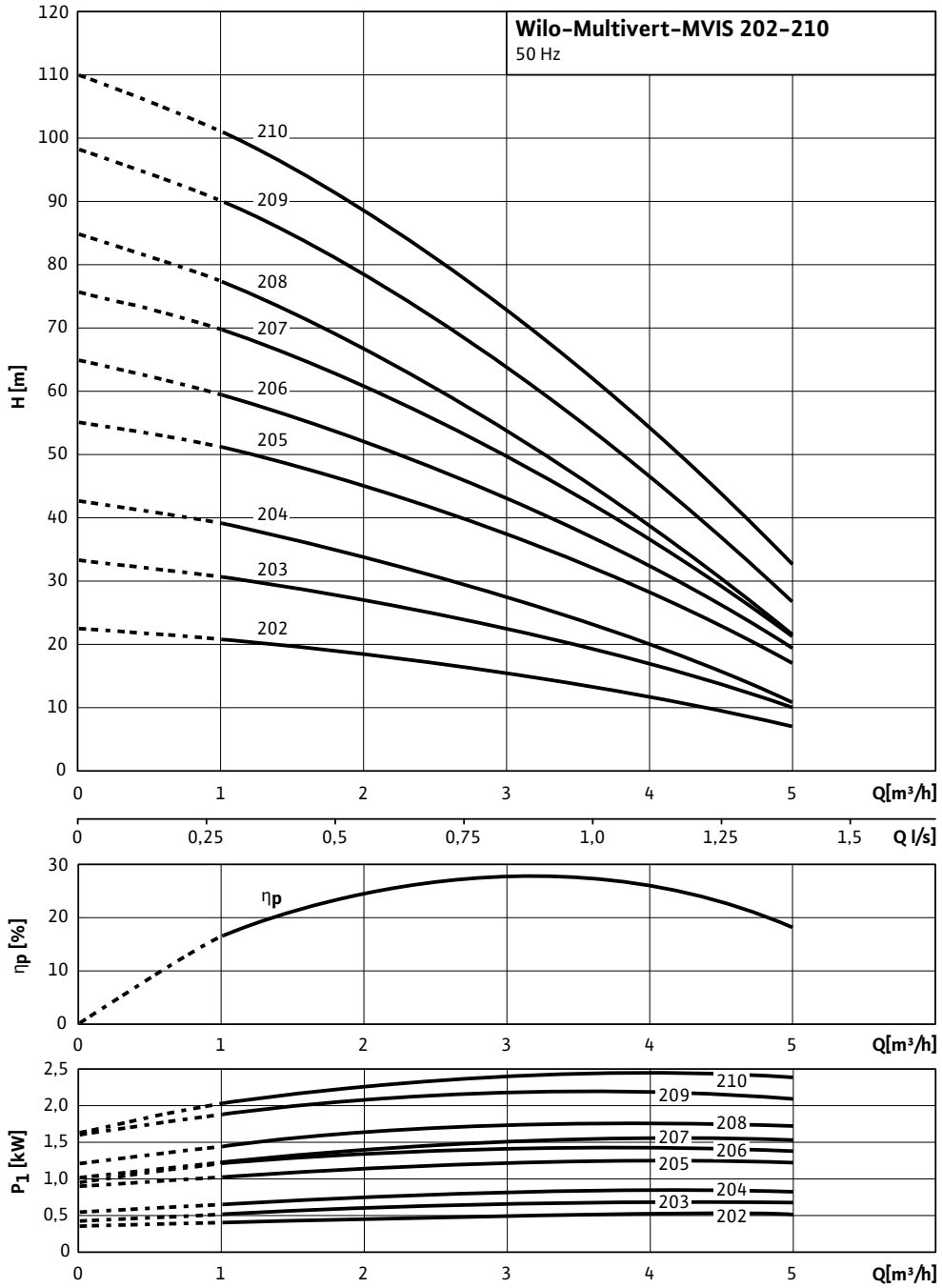

Pump curves in accordance with ISO 9906, class 2

Pump curves, motor data Wilo-Multivert MVIS

Motor data						
Wilo-Multivert...	**Nominal motor power**	**Nominal current 3~230 V, 50 Hz**	**Nominal current 3~400 V, 50 Hz**	**Motor efficiency**		
	P_2	I_N		$\eta_{m\ 50\%}$	$\eta_{m\ 75\%}$	$\eta_{m\ 100\%}$
	kW	A		%		
MVIS 202	0.35	2.10	1.20	–	–	–
MVIS 203	0.45	2.60	1.50	–	–	–
MVIS 204	0.45	3.00	1.70	–	–	–
MVIS 205	1.10	4.50	2.60	–	–	–
MVIS 206	1.10	4.90	2.80	–	–	–
MVIS 207	1.10	5.20	3.00	–	–	–
MVIS 208	1.10	5.60	3.20	–	–	–
MVIS 209	2.20	8.00	4.60	–	–	–
MVIS 210	2.20	8.50	4.90	–	–	–

Motor efficiency based on 400 V, 50 Hz

Dimensions, weights Wilo-Multivert MVIS

Dimension drawing

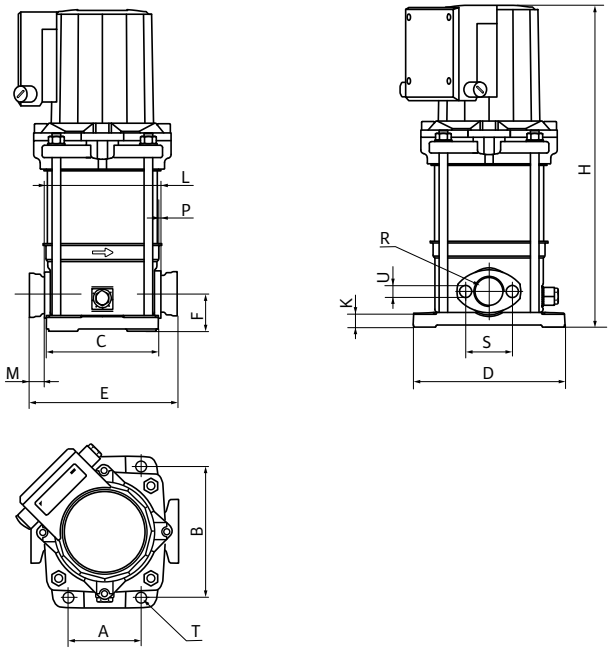

Dimensions, weights

Wilo-Multivert...	Nominal connection diameters DN	Dimensions														Weight approx.
		A	*B*	*C*	*D*	*E*	*F*	*H*	*K*	*L*	*M*	*P*	*S*	*T*	*U*	*m*
		mm														kg
MVIS 202	Rp1	100	180	157	212	204	50	378	20	160	20	2	75	12	M10	16.0
MVIS 203	Rp1	100	180	157	212	204	50	378	20	160	20	2	75	12	M10	17.0
MVIS 204	Rp1	100	180	157	212	204	50	402	20	160	20	2	75	12	M10	17.5
MVIS 205	Rp1	100	180	157	212	204	50	446	20	160	20	2	75	12	M10	22.5
MVIS 206	Rp1	100	180	157	212	204	50	470	20	160	20	2	75	12	M10	23.0
MVIS 207	Rp1	100	180	157	212	204	50	494	20	160	20	2	75	12	M10	23.5
MVIS 208	Rp1	100	180	157	212	204	50	518	20	160	20	2	75	12	M10	23.5
MVIS 209	Rp1	100	180	157	212	204	50	542	20	160	20	2	75	12	M10	29.0
MVIS 210	Rp1	100	180	157	212	204	50	596	20	160	20	2	75	12	M10	29.5

1) "E" dimension including counter flanges (2 x 25 mm)
2) "L" dimension without counter flanges
3) Weight including counter flanges, without packaging

Pump curves, motor data Wilo-Multivert MVIS

Wilo-Multivert MVIS 402 - 410

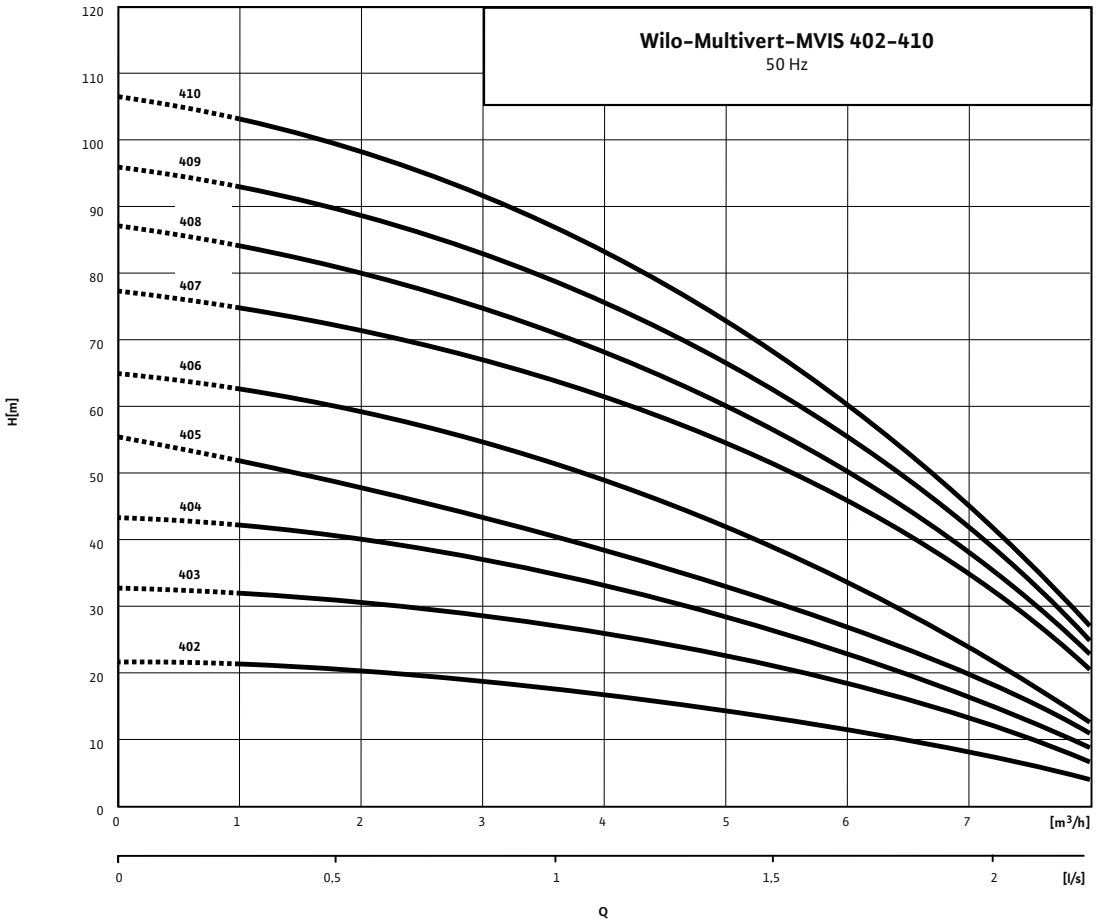

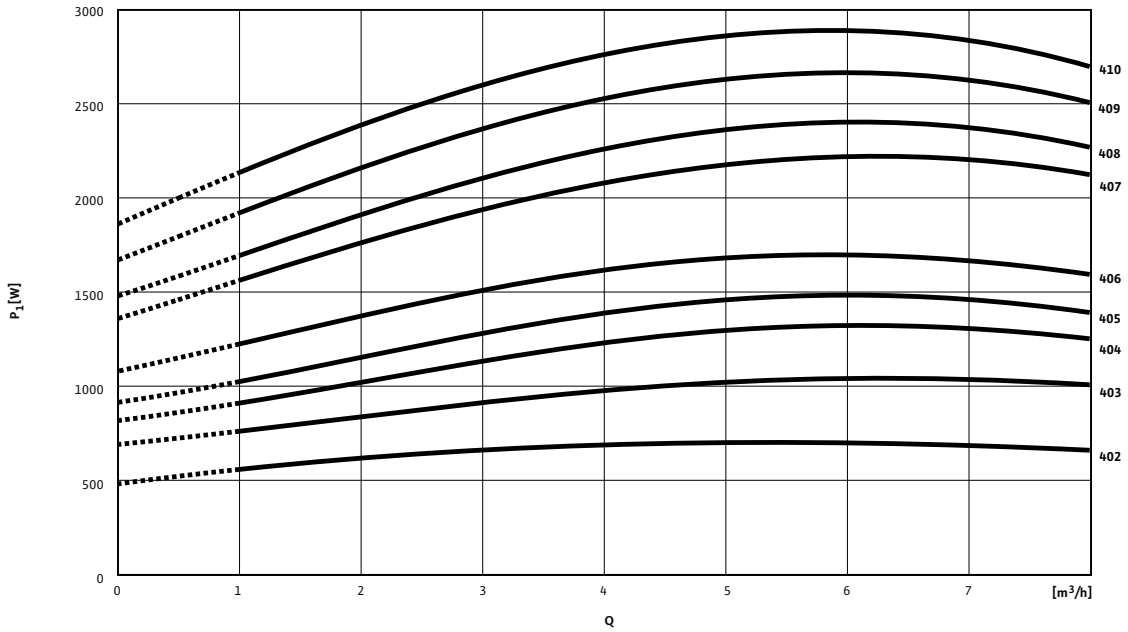

Pump curves in accordance with ISO 9906, class 2

Pump curves, motor data Wilo-Multivert MVIS

Motor data						
Wilo-Multivert...	**Nominal motor power**	**Nominal current 3~230 V, 50 Hz**	**Nominal current 3~400 V, 50 Hz**	**Motor efficiency**		
	P_2	I_N		$\eta_{m\ 50\%}$	$\eta_{m\ 75\%}$	$\eta_{m\ 100\%}$
	kW	A		%		
MVIS 402	0.45	2.60	1.50	–	–	–
MVIS 403	1.10	4.20	2.40	–	–	–
MVIS 404	1.10	4.50	2.60	–	–	–
MVIS 405	1.10	5.20	3.00	–	–	–
MVIS 406	1.10	5.60	3.20	–	–	–
MVIS 407	2.20	8.00	4.60	–	–	–
MVIS 408	2.20	8.50	4.90	–	–	–
MVIS 409	2.20	9.20	5.30	–	–	–
MVIS 410	2.20	9.70	5.60	–	–	–

Motor efficiency based on 400 V, 50 Hz

Dimensions, weights Wilo-Multivert MVIS

Dimension drawing

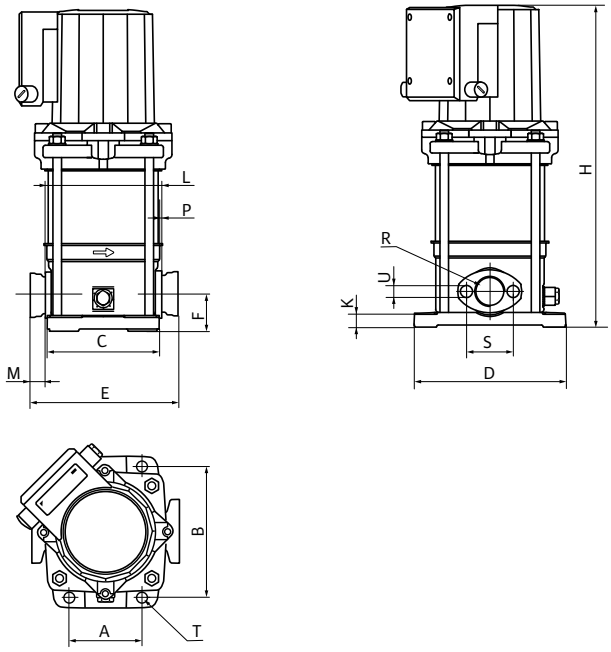

Dimensions, weights																
Wilo-Multivert...	**Nominal connection diameters DN**	**Dimensions**														**Weight approx.**
		A	*B*	*C*	*D*	*E*	*F*	*H*	*K*	*L*	*M*	*P*	*S*	*T*	*U*	*m*
		mm														kg
MVIS 402	Rp¼	100	180	157	212	204	50	378	20	160	20	2	75	12	M10	16.5
MVIS 403	Rp¼	100	180	157	212	204	50	398	20	160	20	2	75	12	M10	21.5
MVIS 404	Rp¼	100	180	157	212	204	50	422	20	160	20	2	75	12	M10	22.0
MVIS 405	Rp¼	100	180	157	212	204	50	446	20	160	20	2	75	12	M10	22.5
MVIS 406	Rp¼	100	180	157	212	204	50	470	20	160	20	2	75	12	M10	23.0
MVIS 407	Rp¼	100	180	157	212	204	50	524	20	160	20	2	75	12	M10	23.5
MVIS 408	Rp¼	100	180	157	212	204	50	548	20	160	20	2	75	12	M10	28.5
MVIS 409	Rp¼	100	180	157	212	204	50	572	20	160	20	2	75	12	M10	29.0
MVIS 410	Rp¼	100	180	157	212	204	50	596	20	160	20	2	75	12	M10	29.5

1) "E" dimension including counter flanges (2 x 25 mm)
2) "L" dimension without counter flanges
3) Weight including counter flanges, without packaging

Pump curves, motor data Wilo-Multivert MVIS

Wilo-Multivert MVIS 802 - 806

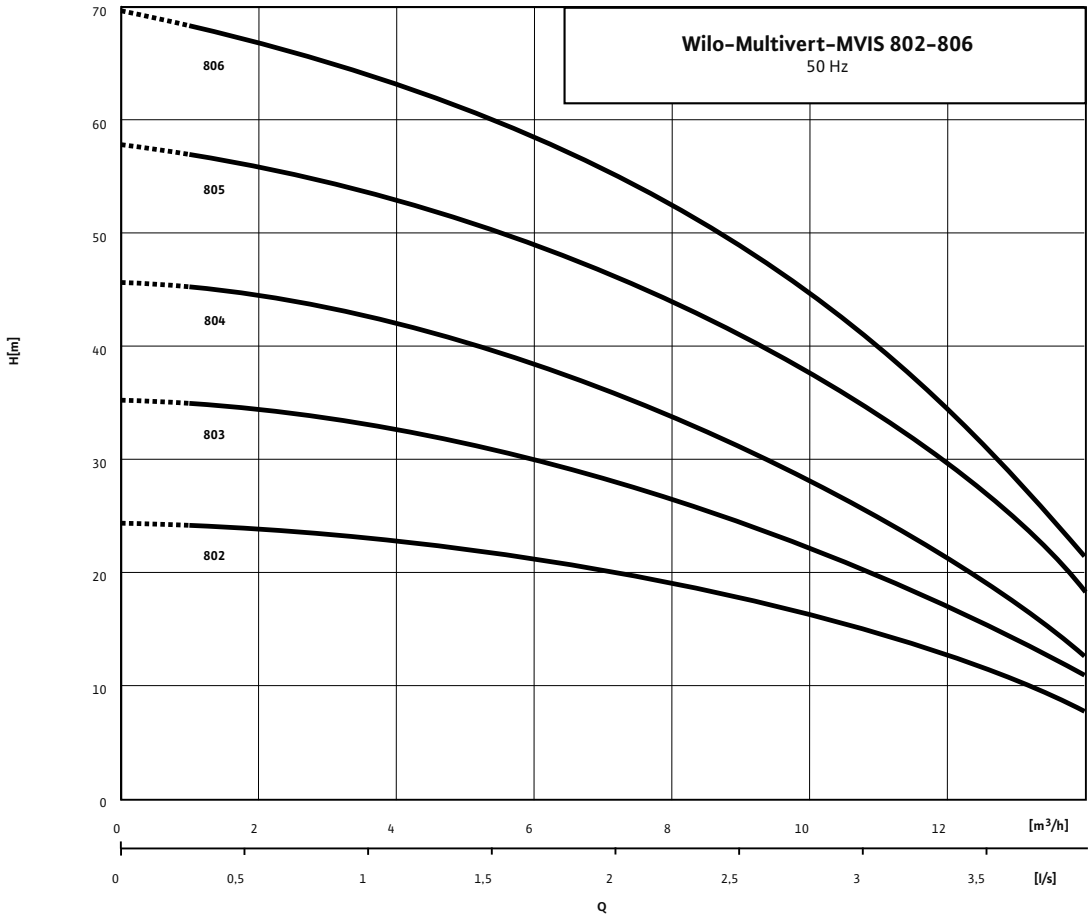

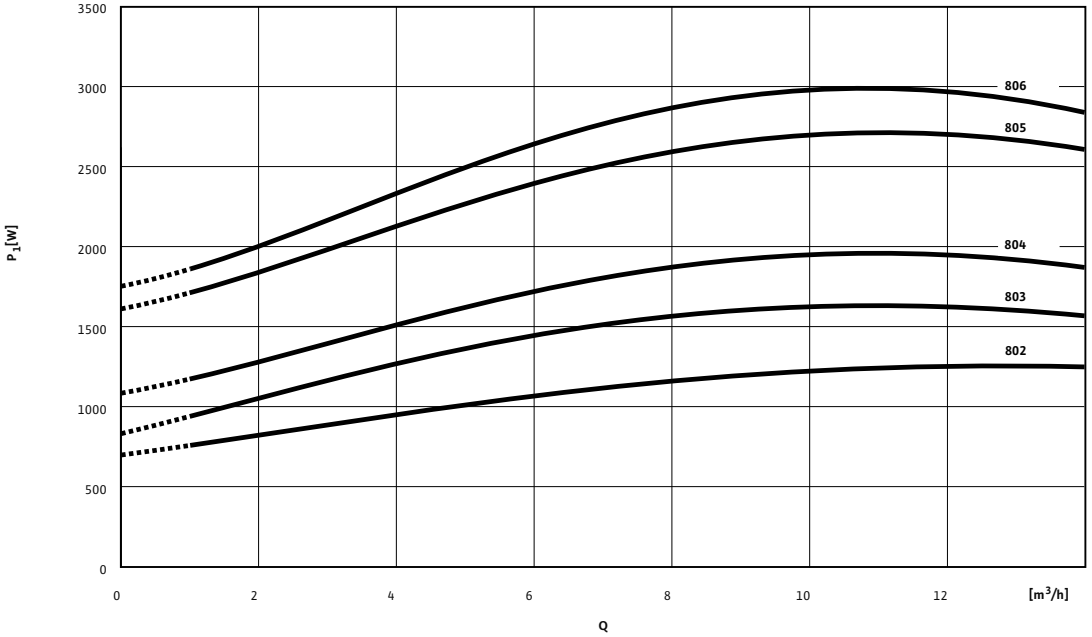

Pump curves in accordance with ISO 9906, class 2

Pump curves, motor data Wilo-Multivert MVIS

Motor data						
Wilo-Multivert...	**Nominal motor power**	**Nominal current 3~230 V, 50 Hz**	**Nominal current 3~400 V, 50 Hz**	**Motor efficiency**		
	P_2	I_N		$\eta_{m\ 50\%}$	$\eta_{m\ 75\%}$	$\eta_{m\ 100\%}$
	kW	A		%		
MVIS 802	1.10	4.50	2.60	–	–	–
MVIS 803	1.10	5.40	3.10	–	–	–
MVIS 804	1.10	6.30	3.60	–	–	–
MVIS 805	2.20	9.20	5.30	–	–	–
MVIS 806	2.20	9.70	5.60	–	–	–

Motor efficiency based on 400 V, 50 Hz

Dimensions, weights Wilo-Multivert MVIS

Dimension drawing

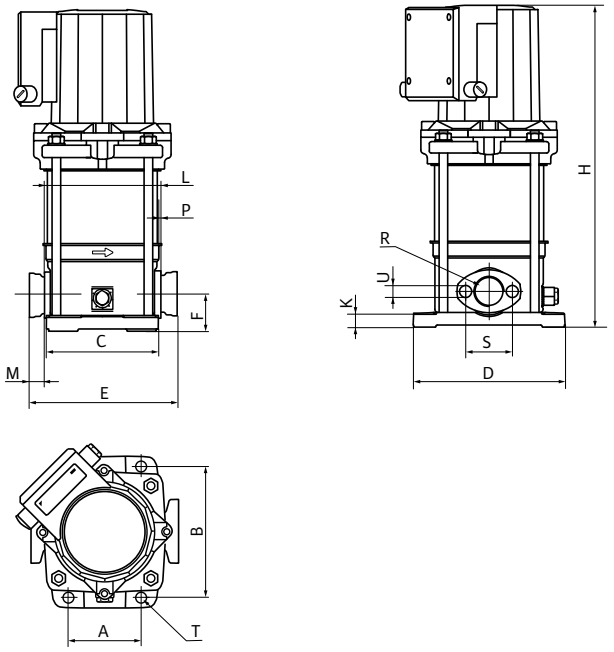

Dimension drawing

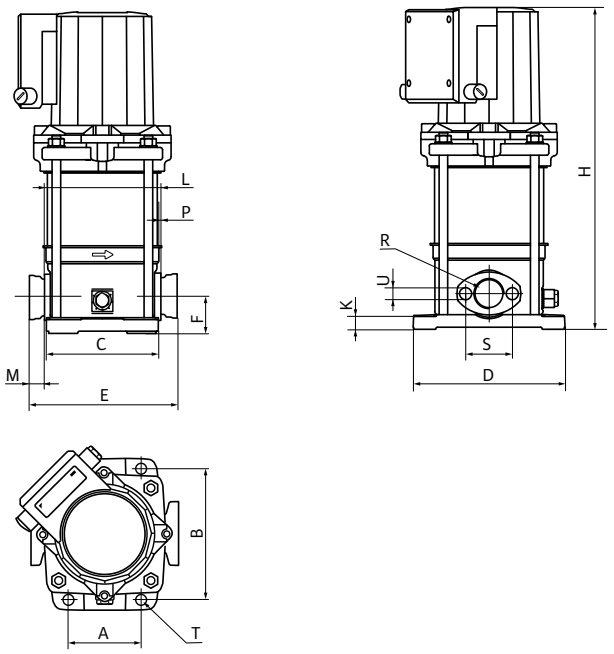

Dimensions, weights Wilo-Multivert MVIS

Dimensions, weights																
Wilo-Multivert...	**Nominal connection diameters DN**	**Dimensions**														**Weight approx.**
		A	*B*	*C*	*D*	*E*	*F*	*H*	*K*	*L*	*M*	*P*	*S*	*T*	*U*	*m*
		mm														kg
MVIS 802	Rp½	130	215	187	252	250	80	425	20	200	25	4	100	12	M12	25.0
MVIS 803	Rp½	130	215	187	252	250	80	455	20	200	25	4	100	12	M12	25.5
MVIS 804	Rp½	130	215	187	252	250	80	485	20	200	25	4	100	12	M12	26.0
MVIS 805	Rp½	130	215	187	252	250	80	545	20	200	25	4	100	12	M12	31.5
MVIS 806	Rp½	130	215	187	252	250	80	575	20	200	25	4	100	12	M12	32.0

1) "E" dimension including counter flanges (2 x 25 mm)
2) "L" dimension without counter flanges
3) Weight including counter flanges, without packaging

Series description Wilo-Economy MHIE

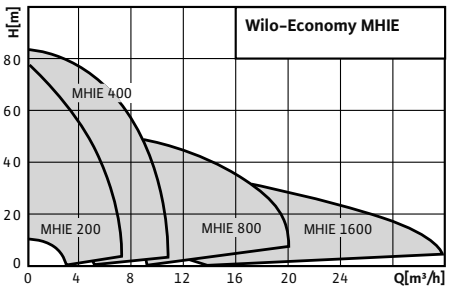

Design
Non-self-priming multistage pump with integrated frequency converter

Application
- Water supply and pressure boosting
- Fire extinguishing systems
- Industrial circulation systems
- Process engineering
- Cooling water circulation systems
- Washing and sprinkling systems

Type key

Example:	**MHIE 402N-1/E/3-2/M13-2G**
MHIE	Multistage horizontal high-pressure centrifugal pump, electronically controlled
4	Volume flow in m^3/h
02	Number of impellers
N	IE2 motor
1	Material 1 = 1.4301 (AISI 304) 2 = 1.4404 (AISI 316L)
E	Type of gasket E = EPDM V = FKM (Viton)
3	1 = 1~ (single-phase AC) 3 = 3~ (three-phase AC) - = hydraulics without motor
M13	Only for 1~ (single phase AC) Preset operating mode on delivery M13 = mode 1 or 3 (manual or remote control) M2 = mode 2 (pressure regulation mode)
2G	Frequency converter, second generation

Special features/product advantages
- Easy commissioning
- All parts that come in contact with the fluid are made of stainless steel 1.4301 (AISI 304) or 1.4404 (AISI 316 L)
- Compact design
- IEC three-phase AC motor (level IE2)
- Integrated frequency converter
  - With optional interfaces for bus communication using plug-in IF-Modules in the case of 3~ motors
- Full motor protection
- All relevant components are KTW and WRAS certified

Equipment/function
- Stainless steel pump in monobloc design
- Hydraulics in 1.4301
- Threaded connection
- Integrated frequency converter
- Three-phase version with red-button technology and LCD display for state display
- Integrated thermal motor protection

Technical data
- Mains connection 1 ~ 230 V (±10 %), 50 Hz or 230 V (±10 %), 60 Hz
- Mains connection 3 ~ 400 V (±10 %), 50 Hz (Y) or 400 V (±10 %), 60 Hz (Y)
- Fluid temperature -15 to +110 °C
- Max. operating pressure 10 bar
- Max. inlet pressure 6 bar
- Protection class IP 54
- Emitted interference according to EN 61000-6-4 (EN 61000-6-3 optionally)
- Interference resistance in compliance with EN 61000-6-2
- Nominal diameters of pipe connections on suction side to type Rp 1, Rp 1¼, Rp 1½ or Rp 2
- Nominal diameters of pipe connections on pressure side to type Rp 1, Rp 1¼ or Rp 1½

Materials
- Impellers, stage chambers and pump housing stainless steel 1.4301/1.4404
- Shaft stainless steel 1.4404
- Gasket EPDM (EP 851)/FKM (Viton)
- Mechanical seal B-carbon/tungsten carbide
- Bearing tungsten carbide
- Pump base aluminium

Scope of delivery
- Pump
- Installation and operating instructions

Terminal diagram, motor data Wilo-Economy MHIE

Electrical connection

1~230 V ≤7.5 kW

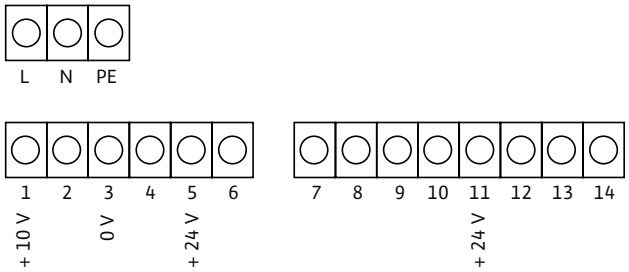

Electrical connection

3~400 V ≤7.5 kW

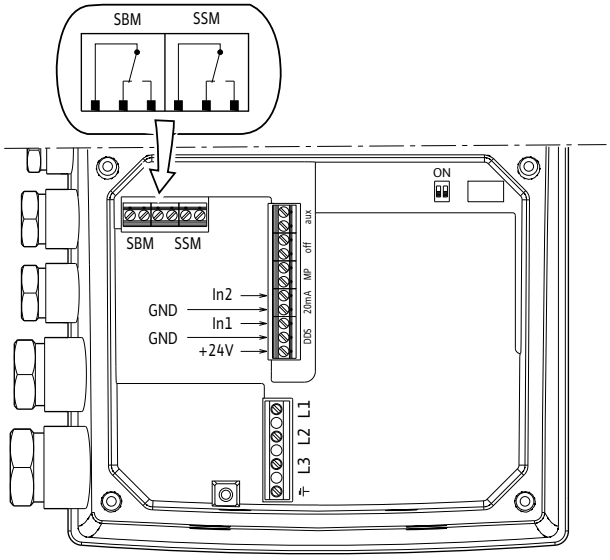

Pump curves, motor data Wilo-Economy MHIE

Wilo-Economy MHIE 205

1~230 V

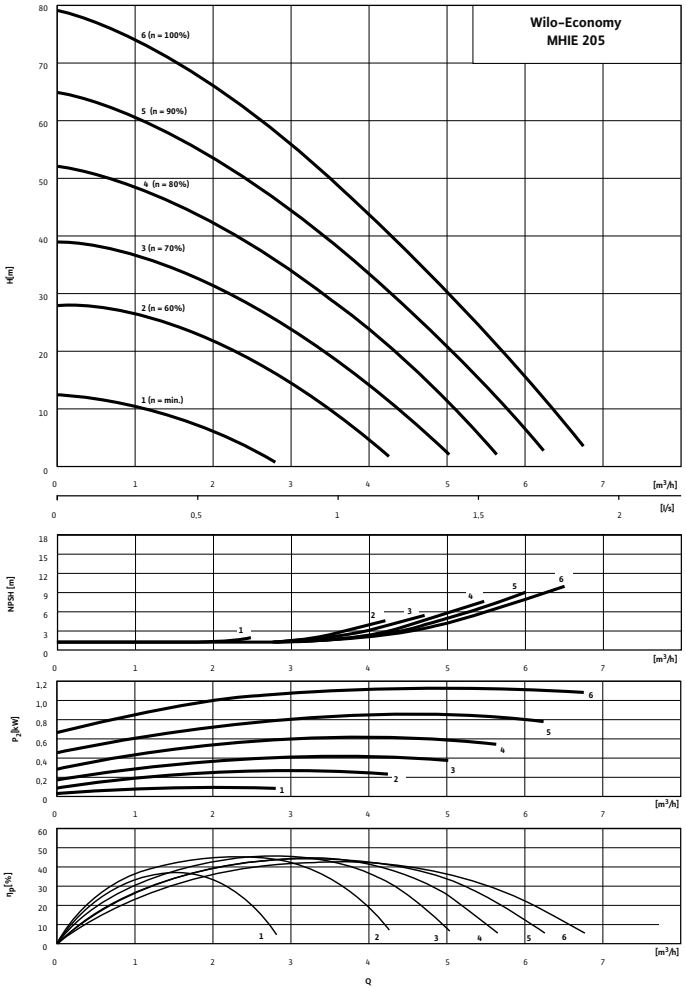

Pump curves in accordance with ISO 9906, class 2

Motor data					
Wilo-Economy...	**Nominal motor power**	**Nominal current 3~400 V, 50 Hz**	**Motor efficiency**		
	P_2	I_N	$\eta_{m\ 50\%}$	$\eta_{m\ 75\%}$	$\eta_{m\ 100\%}$
	kW	A	%		
MHIE 205 M1, M3	1.10	–	–	–	–
MHIE 205 M2	1.10	–	–	–	–

Motor efficiency based on 400 V, 50 Hz

Dimensions, weights Wilo-Economy MHIE

Dimension drawing

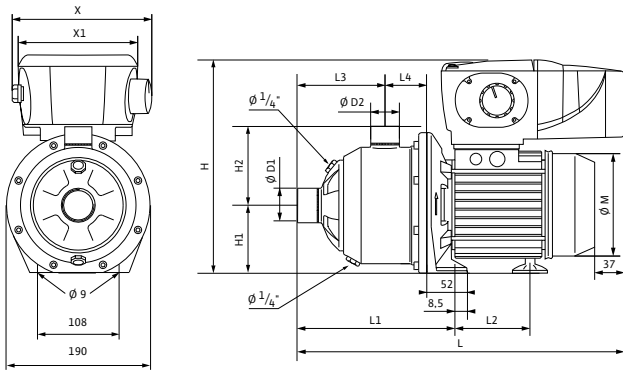

Dimensions, weights														
Wilo-Economy...	**Dimensions**													**Weight approx.**
	Ø D1	*Ø D2*	*L*	*L1*	*L2*	*L3*	*L4*	*X1*	*X*	*H*	*H1*	*H2*	*Ø M*	*m*
	Rp		mm											kg
MHIE 205 M1, M3	1	1	460.0	252.0	87.5	157.5	51	150	180	284	90	104	155	17.2
MHIE 205 M2	1	1	460.0	252.0	87.5	157.5	51	150	180	284	90	104	155	17.2

Pump curves, motor data Wilo-Economy MHIE

Wilo-Economy MHIE 205-2G

3~400 V

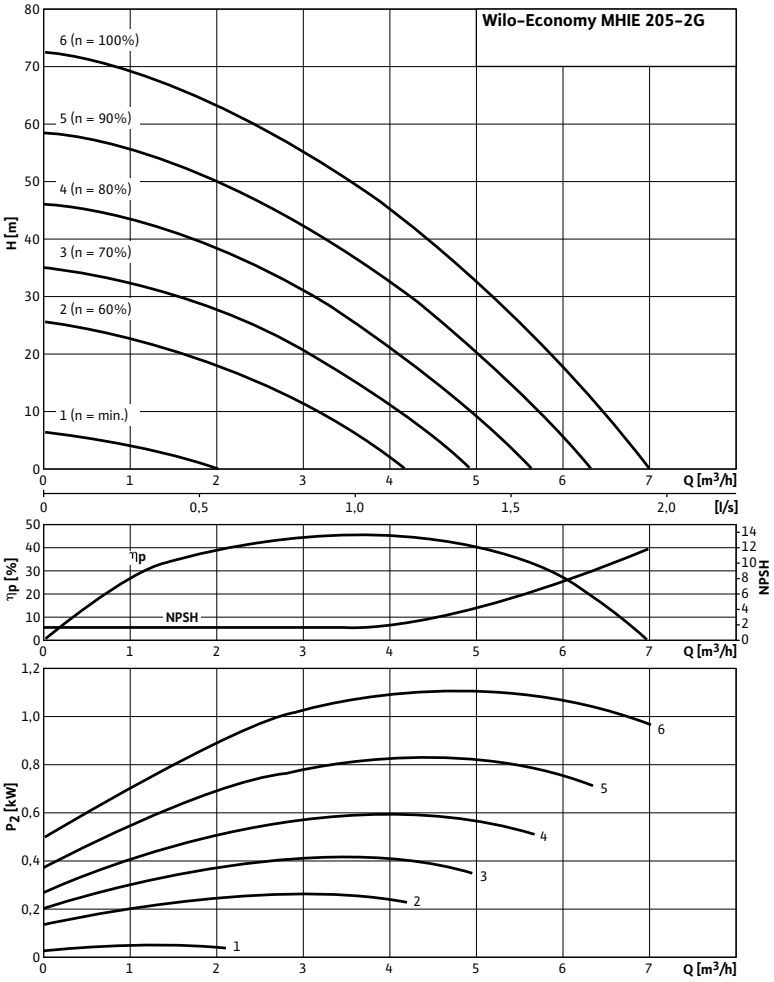

Pump curves in accordance with ISO 9906, class 2

Motor data					
Wilo-Economy...	**Nominal motor power**	**Nominal current 3~400 V, 50 Hz**	**Motor efficiency**		
	P_2	I_N	$\eta_{m\ 50\%}$	$\eta_{m\ 75\%}$	$\eta_{m\ 100\%}$
	kW	A	%		
MHIE 205N-2G	1.10	3.30	79.0	82.0	82.5

Motor efficiency based on 400 V, 50 Hz

Dimensions, weights Wilo-Economy MHIE

Dimension drawing

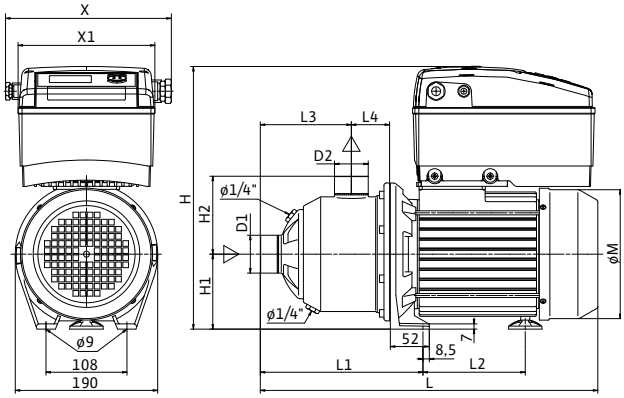

Dimensions, weights														
Wilo-Economy...	**Dimensions**													**Weight approx.**
	Ø D1	*Ø D2*	*L*	*L1*	*L2*	*L3*	*L4*	*X1*	*X*	*H*	*H1*	*H2*	*Ø M*	*m*
	Rp		mm											kg
MHIE 205N-2G	1	1	457.0	253.0	110.0	158.0	51	158	198	321	90	104	146	16.6

Dimensions, weights Wilo-Economy MHIE

Wilo-Economy MHIE 403

1~230 V

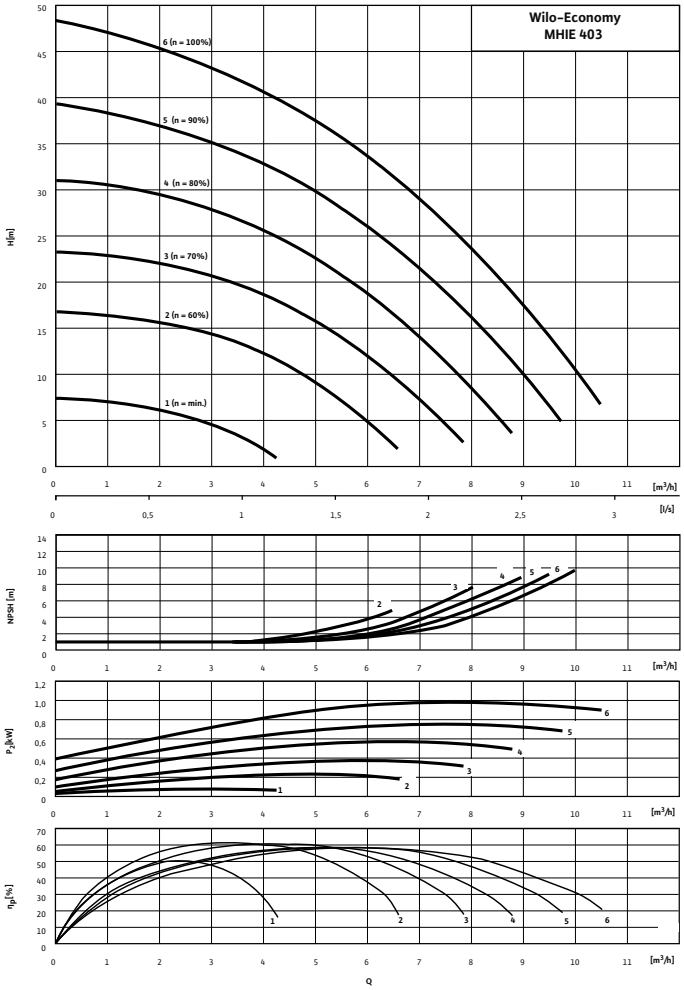

Pump curves in accordance with ISO 9906, class 2

Motor data					
Wilo-Economy...	**Nominal motor power**	**Nominal current 3~400 V, 50 Hz**	**Motor efficiency**		
	P_2	I_N	$\eta_{m\ 50\%}$	$\eta_{m\ 75\%}$	$\eta_{m\ 100\%}$
	kW	A	%		
MHIE 403 M1, M3	1.10	–	–	–	–
MHIE 403 M2	1.10	–	–	–	–

Motor efficiency based on 400 V, 50 Hz

Dimensions, weights Wilo-Economy MHIE

Dimension drawing

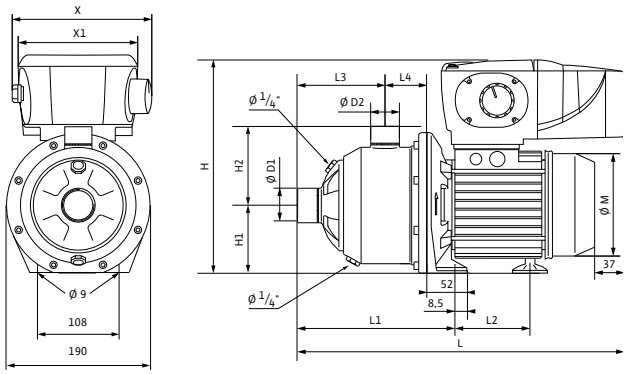

Dimensions, weights															
Wilo-Economy...	**Dimensions**														**Weight approx.**
	Ø D1	*Ø D2*	*L*	*L1*	*L2*	*L3*	*L4*	*L5*	*X1*	*X*	*H*	*H1*	*H2*	*Ø M*	*m*
	Rp		mm												kg
MHIE 403 M1, M3	1¼	1	412.0	204.0	87.5	109.5	51	–	150	180	284	90	104	155	15.7
MHIE 403 M2	1¼	1	412.0	204.0	87.5	109.5	51	–	150	180	284	90	104	155	15.7

Dimensions, weights Wilo-Economy MHIE

Wilo-Economy MHIE 403-2G

3~400 V

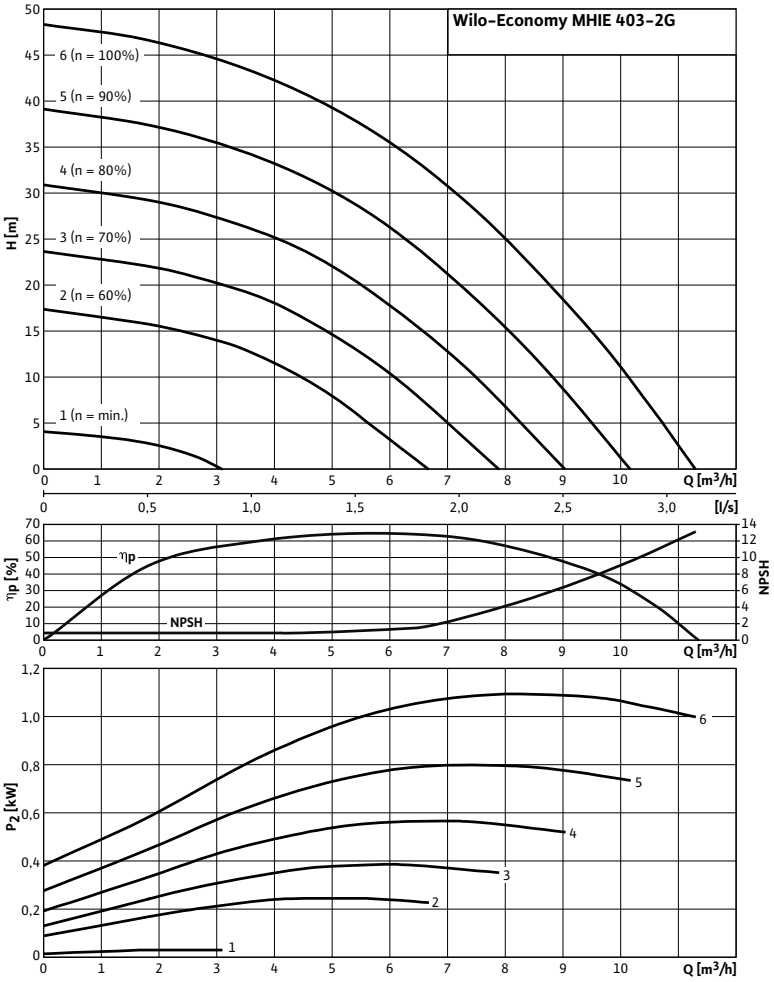

Pump curves in accordance with ISO 9906, class 2

Motor data					
Wilo-Economy...	**Nominal motor power**	**Nominal current 3~400 V, 50 Hz**	**Motor efficiency**		
	P_2	I_N	$\eta_{m\ 50\%}$	$\eta_{m\ 75\%}$	$\eta_{m\ 100\%}$
	kW	A	%		
MHIE 403N-2G	1.10	3.30	79.0	82.0	82.5

Motor efficiency based on 400 V, 50 Hz

Dimensions, weights Wilo-Economy MHIE

Dimension drawing

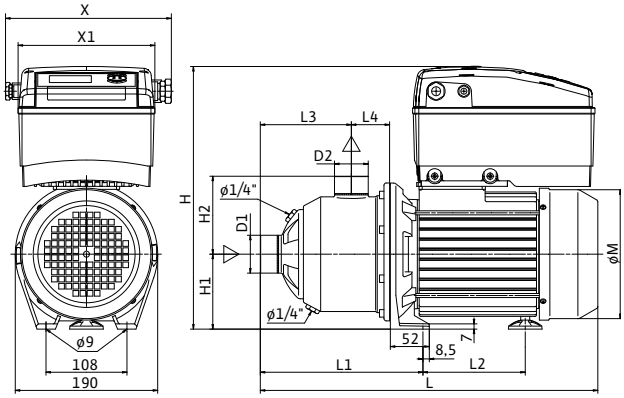

Dimensions, weights															
Wilo-Economy...	**Dimensions**														**Weight approx.**
	Ø D1	*Ø D2*	*L*	*L1*	*L2*	*L3*	*L4*	*L5*	*X1*	*X*	*H*	*H1*	*H2*	*Ø M*	*m*
	Rp		mm												kg
MHIE 403N-2G	1¼	1	457.0	205.0	110.0	110.0	51	–	158	198	321	90	104	146	16.6

Dimensions, weights Wilo-Economy MHIE

Wilo-Economy MHIE 406-2G

3~400 V

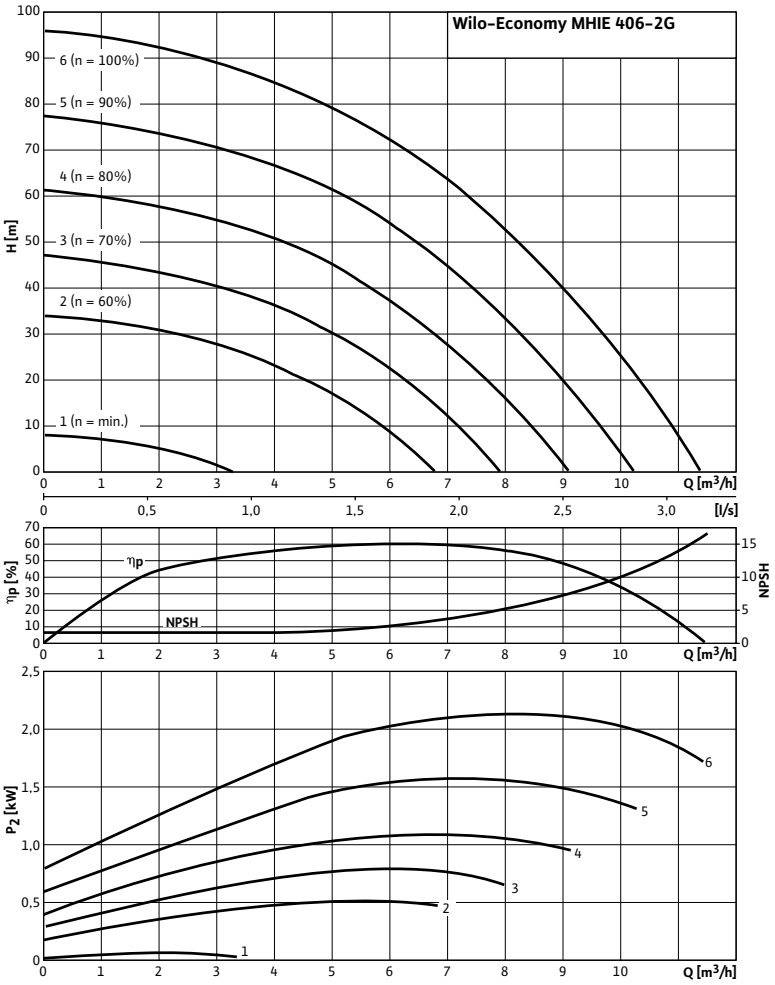

Pump curves in accordance with ISO 9906, class 2

Motor data					
Wilo-Economy...	**Nominal motor power**	**Nominal current 3~400 V, 50 Hz**	**Motor efficiency**		
	P_2	I_N	$\eta_{m\ 50\%}$	$\eta_{m\ 75\%}$	$\eta_{m\ 100\%}$
	kW	A	%		
MHIE 406N-2G	2.20	5.60	81.0	84.0	85.5

Motor efficiency based on 400 V, 50 Hz

Dimensions, weights Wilo-Economy MHIE

Dimension drawing

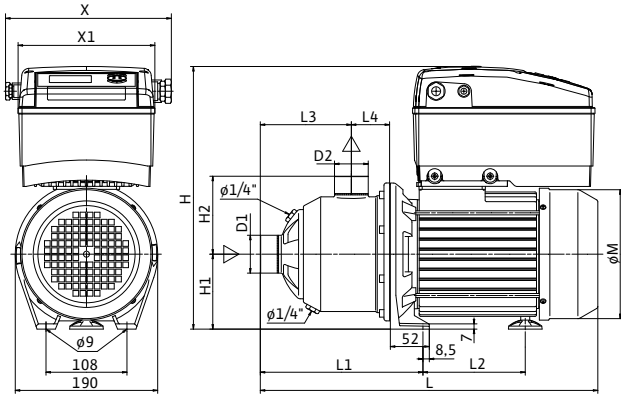

Dimensions, weights															
Wilo-Economy...	**Dimensions**														**Weight approx.**
	Ø D1	*Ø D2*	*L*	*L1*	*L2*	*L3*	*L4*	*L5*	*X1*	*X*	*H*	*H1*	*H2*	*Ø M*	*m*
	Rp		mm												kg
MHIE 406N-2G	1¼	1	523.0	277.0	148.0	182.0	51	–	182	222	341	90	104	171.6	24.4

Pump curves, motor data Wilo-Economy MHIE

Wilo-Economy MHIE 803-2G

3~400 V

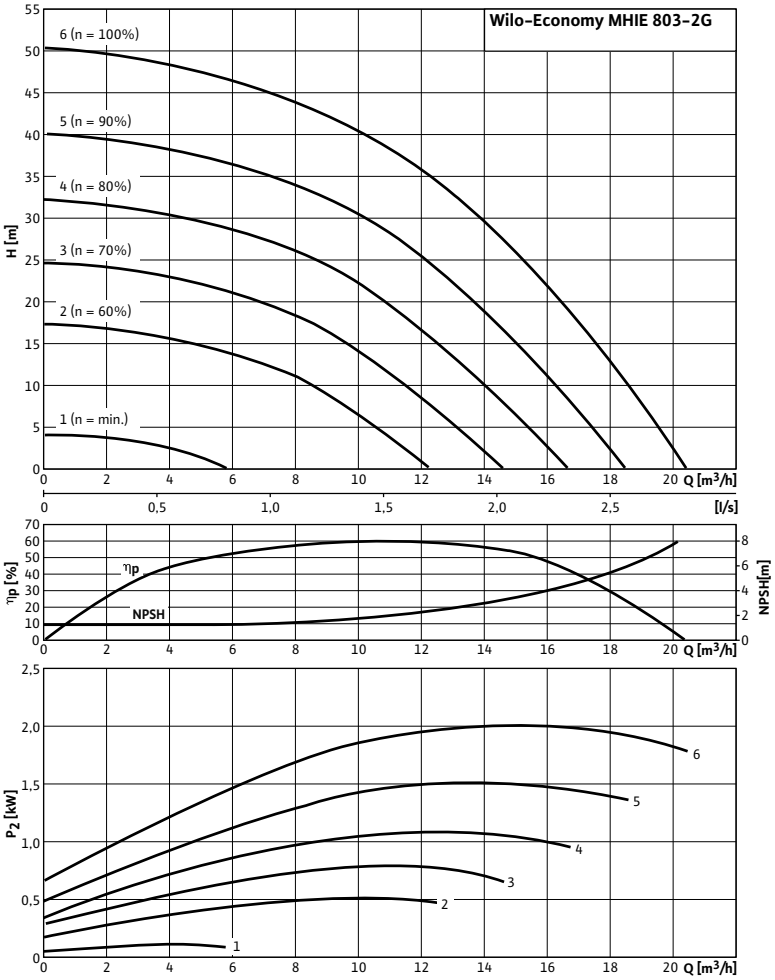

Pump curves in accordance with ISO 9906, class 2

Motor data					
Wilo-Economy...	**Nominal motor power**	**Nominal current 3~400 V, 50 Hz**	**Motor efficiency**		
	P_2	I_N	$\eta_{m\ 50\%}$	$\eta_{m\ 75\%}$	$\eta_{m\ 100\%}$
	kW	A	%		
MHIE 803N-2G	2.20	5.60	81.0	84.0	85.5

Motor efficiency based on 400 V, 50 Hz

Dimensions, weights Wilo-Economy MHIE

Dimension drawing

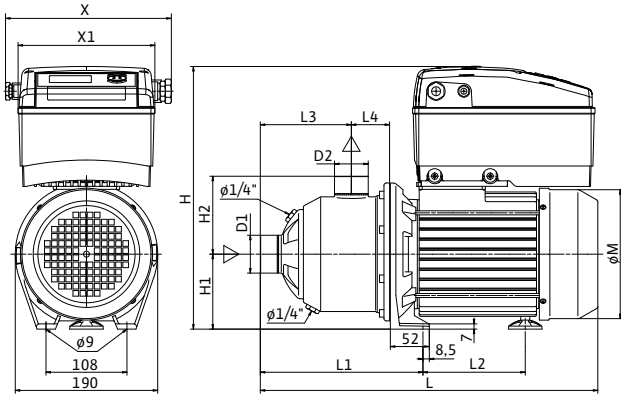

Dimensions, weights															
Wilo-Economy...	**Dimensions**														**Weight approx.**
	Ø D1	*Ø D2*	*L*	*L1*	*L2*	*L3*	*L4*	*L5*	*X1*	*X*	*H*	*H1*	*H2*	*Ø M*	*m*
	Rp		mm												kg
MHIE 803N-2G	1½	1¼	463.0	216.0	148.0	121.5	51	–	182	222	341	90	104	171.6	23.2

Pump curves, motor data Wilo-Economy MHIE

Wilo-Economy MHIE 1602-2G

3~400 V

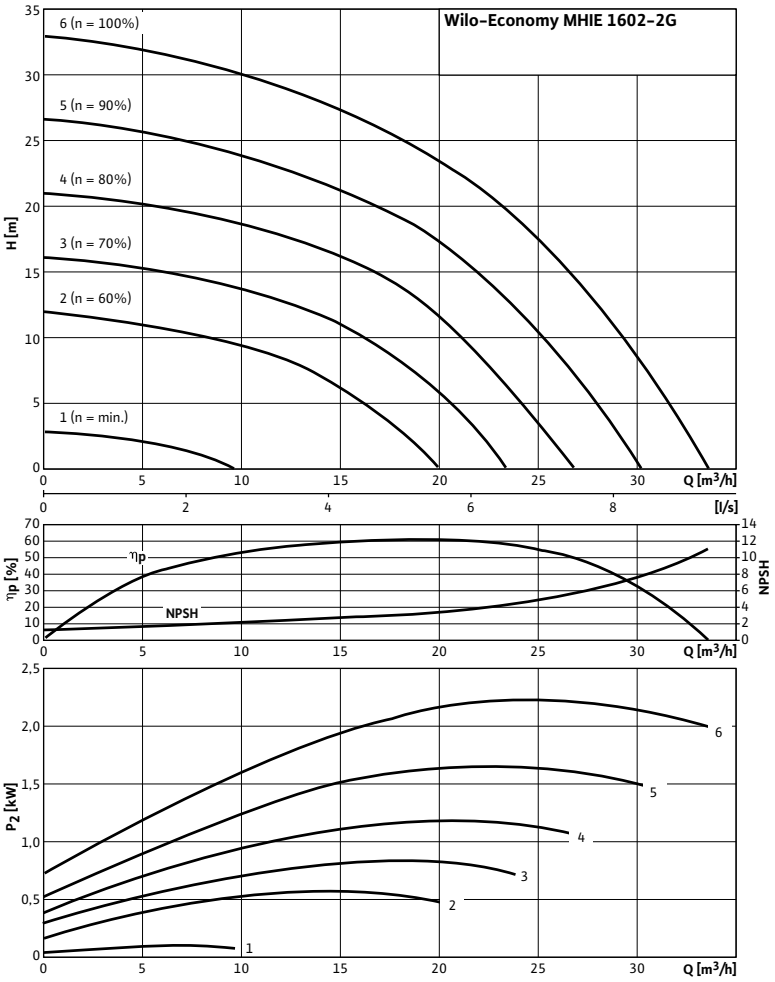

Pump curves in accordance with ISO 9906, class 2

Motor data					
Wilo-Economy...	**Nominal motor power**	**Nominal current 3~400 V, 50 Hz**	**Motor efficiency**		
	P_2	I_N	$\eta_{m\ 50\%}$	$\eta_{m\ 75\%}$	$\eta_{m\ 100\%}$
	kW	A	%		
MHIE 1602N-2G	2.20	5.60	81.0	84.0	85.5

Motor efficiency based on 400 V, 50 Hz

Dimensions, weights Wilo-Economy MHIE

Dimension drawing

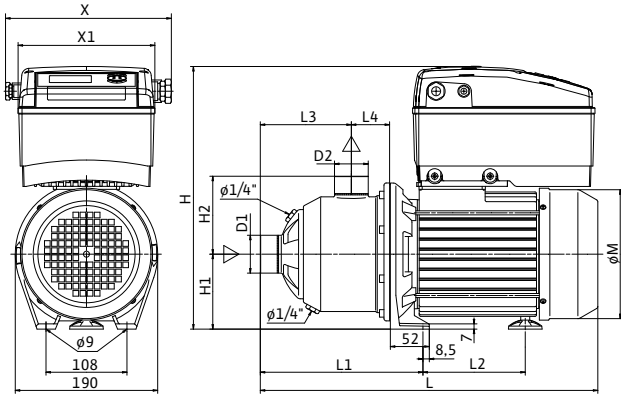

Dimensions, weights														
Wilo-Economy...	**Dimensions**													**Weight approx.**
	Ø D1	*Ø D2*	*L*	*L1*	*L2*	*L3*	*L4*	*X1*	*X*	*H*	*H1*	*H2*	*Ø M*	*m*
	Rp		mm											kg
MHIE 1602N-2G	2	1½	482.0	236.0	148.0	138.0	55	182	222	341	90	105	171.6	25.3

Series description Wilo-Economy MHI

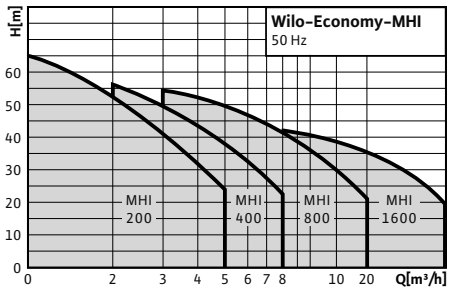

Design
Non-self-priming multistage pump

Application
- Water supply and pressure boosting
- Commerce and industry
- Cooling water circulation systems
- Washing and sprinkling systems

Type key

Example:	**MHI 205N-1/E/3-400-50-2**
MHI	Multistage horizontal high-pressure centrifugal pump
2	Volume flow in m^3/h
05	Number of impellers
N	IE2 motor
1	Material 1 = 1.4301 (AISI 304) 2 = 1.4404 (AISI 316L)
E	Type of gasket E = EPDM V = FKM (Viton)
3	1 = 1~ (single-phase AC) 3 = 3~ (three-phase AC)
400	Connection voltage in V
50	Frequency in Hz
2	Number of poles

Special features/product advantages
- IE2-IEC three-phase AC motor (≥ 0.75 kW)
- All parts that come in contact with the fluid are made of stainless steel 1.4301 (AISI 304) or 1.4404 (AISI 316 L)
- Compact design
- All relevant components are KTW and WRAS certified

Equipment/function
- Stainless steel pump in monobloc design
- Threaded connection
- Single-phase or three-phase motor
- Single-phase AC motor with integrated thermal motor protection

Technical data
- Mains connection 1~230 V (±10 %), 50 Hz or optionally 220 V (±10 %), 60 Hz
- Mains connection 3~230 V (±10 %), 50 Hz (Δ) or optionally 220 V (±10 %), 60 Hz (Δ), 400 V (±10 %), 50 Hz (Y) or optionally 380 V (±10 %), 60 Hz (Y)
- Fluid temperature of -15 to +110 °C
- Max. operating pressure of 10 bar
- Max. inlet pressure of 6 bar
- Protection class 1~: IP X4; 3~: IP 54
- Nominal diameters of pipe connections: Rp 1, Rp 1 ¼ or Rp 1 ½, depending on type

Materials
- Impellers, stage chambers and pump housing stainless steel 1.4301/1.4404
- Shaft stainless steel 1.4404
- Gasket EPDM (EP 851)/FKM (Viton)
- Mechanical seal B-carbon/tungsten carbide
- Bearing tungsten carbide
- Pump base aluminium

Scope of delivery
- Pump
- Installation and operating instructions

Series description Wilo-Economy MHI

Electrical connection

3~400 V Y

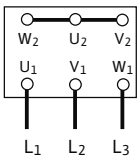

1~230 V

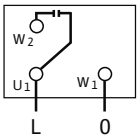

3~230 V Δ

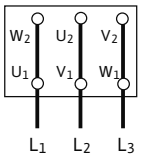

Pump curves, motor data Wilo-Economy MHI

Wilo-Economy MHI 202 – 206

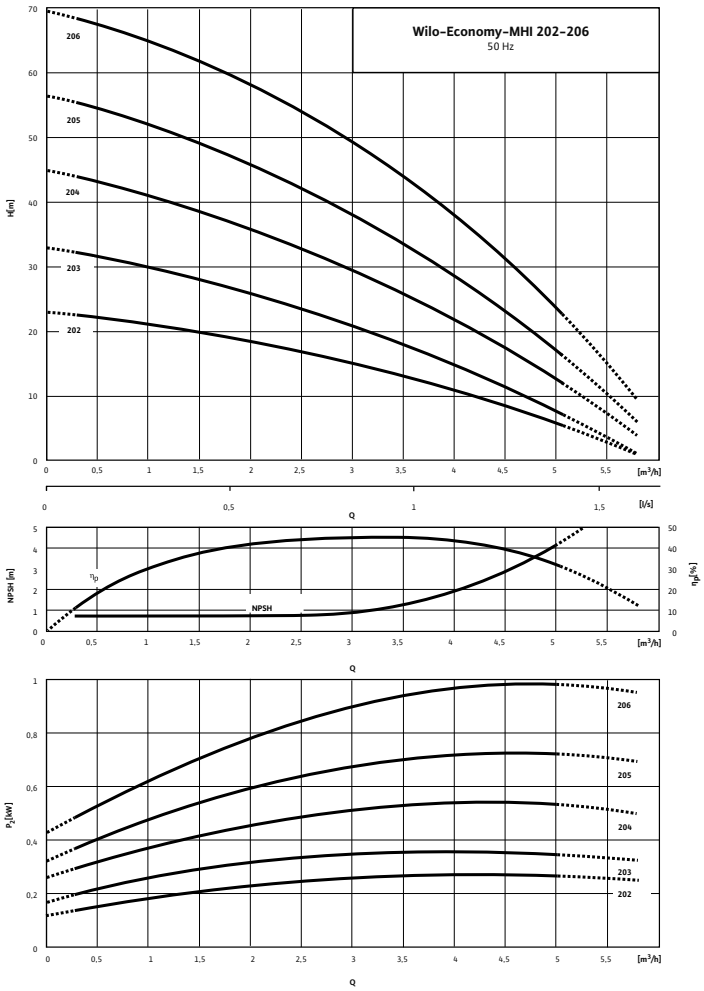

Pump curves in accordance with ISO 9906, class 2

Motor data								
Wilo-Economy...	**Mains connection**	**Nominal motor power**	**Nominal current 1~230 V, 50 Hz**	**Nominal current 3~230 V, 50 Hz**	**Nominal current 3~400 V, 50 Hz**	**Motor efficiency**		
		P_2	I_N			$\eta_{m\ 50\%}$	$\eta_{m\ 75\%}$	$\eta_{m\ 100\%}$
		kW	A			%		
MHI 202	1~230 V, 50 Hz	0.55	4	–	–	–	–	–
MHI 202	3~230/400 V, 50 Hz	0.55	–	3.00	1.70	–	–	–
MHI 203	1~230 V, 50 Hz	0.55	4	–	–	–	–	–
MHI 203	3~230/400 V, 50 Hz	0.55	–	3.00	1.70	–	–	–
MHI 204	1~230 V, 50 Hz	0.55	4	–	–	–	–	–
MHI 204	3~230/400 V, 50 Hz	0.55	–	3.00	1.70	–	–	–
MHI 205	1~230 V, 50 Hz	0.75	5.1	–	–	–	–	–
MHI 205	3~230/400 V, 50 Hz	0.75	–	3.30	1.91	76.0	77.4	77.4
MHI 206	1~230 V, 50 Hz	1.10	7.2	–	–	–	–	–
MHI 206	3~230/400 V, 50 Hz	1.10	–	4.80	2.80	78.0	79.6	79.6

Motor efficiency based on 400 V, 50 Hz

Dimensions, weights Wilo-Economy MHI

Dimension drawing

Wilo-Economy MHI 202 - 1604

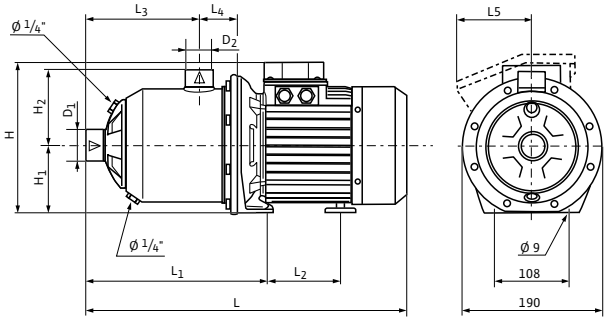

Terminal box, AC version (Represented by broken line)

Dimensions, weights

Wilo-Economy...	Mains connection	Dimensions											Weight approx.
		Ø D1	*Ø D2*	*L*	*L1*	*L2*	*L3*	*H2*	*H*	*L5*	*L4*	*H1*	*m*
		Rp		mm									kg
MHI 202	1~230 V, 50 Hz	1	1	375.0	204.0	88.0	109.5	104.0	216.0	106.0	52.0	90.0	9.8
MHI 202	3~230/400 V, 50 Hz	1	1	375.0	204.0	88.0	109.5	104.0	192.0	–	52.0	90.0	8.9
MHI 203	1~230 V, 50 Hz	1	1	375.0	204.0	88.0	109.5	104.0	216.0	106.0	52.0	90.0	9.8
MHI 203	3~230/400 V, 50 Hz	1	1	375.0	204.0	88.0	109.5	104.0	192.0	–	52.0	90.0	8.9
MHI 204	1~230 V, 50 Hz	1	1	423.0	252.0	88.0	157.5	104.0	216.0	106.0	52.0	90.0	10.6
MHI 204	3~230/400 V, 50 Hz	1	1	423.0	252.0	88.0	157.5	104.0	192.0	–	52.0	90.0	9.7
MHI 205	1~230 V, 50 Hz	1	1	423.0	252.0	88.0	157.5	104.0	216.0	106.0	52.0	90.0	12.2
MHI 205	3~230/400 V, 50 Hz	1	1	457.0	252.0	110.0	157.5	104.0	219.0	52.0	52.0	90.0	13.0
MHI 206	1~230 V, 50 Hz	1	1	472.0	276.0	103.5	181.5	104.0	224.0	106.0	52.0	90.0	15.7
MHI 206	3~230/400 V, 50 Hz	1	1	481.0	276.0	110.0	181.5	104.0	219.0	52.0	52.0	90.0	13.8

Pump curves, motor data Wilo-Economy MHI

Wilo-Economy MHI 402 – 406

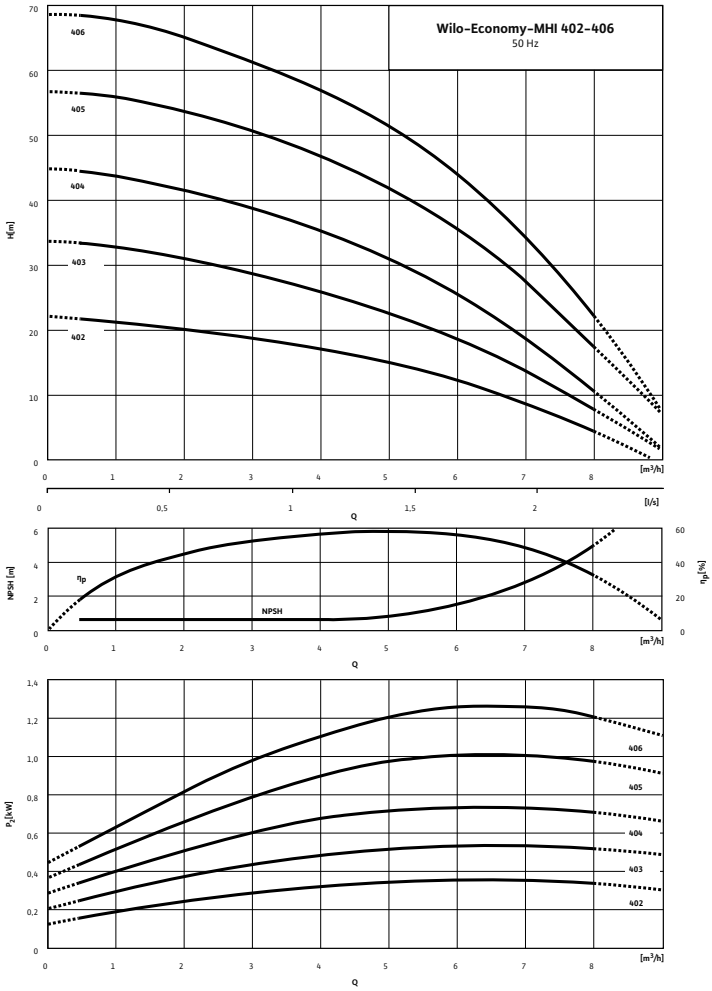

Pump curves in accordance with ISO 9906, class 2

Motor data

Wilo-Economy...	Mains connection	Nominal motor power	Nominal current 1~230 V, 50 Hz	Nominal current 3~230 V, 50 Hz	Nominal current 3~400 V, 50 Hz	Motor efficiency		
		P_2	I_N			$\eta_{m\,50\%}$	$\eta_{m\,75\%}$	$\eta_{m\,100\%}$
		kW	A			%		
MHI 402	1~230 V, 50 Hz	0.55	4	–	–	–	–	–
MHI 402	3~230/400 V, 50 Hz	0.55	–	3.00	1.70	–	–	–
MHI 403	1~230 V, 50 Hz	0.55	4	–	–	–	–	–
MHI 403	3~230/400 V, 50 Hz	0.55	–	3.00	1.70	–	–	–
MHI 404	1~230 V, 50 Hz	0.75	5.1	–	–	–	–	–
MHI 404	3~230/400 V, 50 Hz	0.75	–	3.30	1.91	76.0	77.4	77.4
MHI 405	1~230 V, 50 Hz	1.10	7.2	–	–	–	–	–
MHI 405	3~230/400 V, 50 Hz	1.10	–	4.80	2.80	78.0	79.6	79.6
MHI 406	1~230 V, 50 Hz	1.50	9.2	–	–	–	–	–
MHI 406	3~230/400 V, 50 Hz	1.10	–	4.80	2.80	78.0	79.6	79.6

Motor efficiency based on 400 V, 50 Hz

Dimensions, weights Wilo-Economy MHI

Dimension drawing

Wilo-Economy MHI 202 - 1604

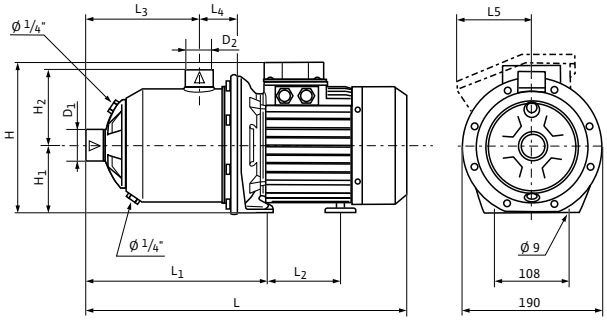

Terminal box, AC version (Represented by broken line)

Dimensions, weights

Wilo-Economy...	Mains connection	Dimensions											Weight approx.
		Ø D1	*Ø D2*	*L*	*L1*	*L2*	*L3*	*H2*	*H*	*L5*	*L4*	*H1*	*m*
		Rp		mm									kg
MHI 402	1~230 V, 50 Hz	1¼	1	375.0	204.0	88.0	109.5	104.0	216.0	106.0	52.0	90.0	9.8
MHI 402	3~230/400 V, 50 Hz	1¼	1	375.0	204.0	88.0	109.5	104.0	192.0	–	52.0	90.0	8.9
MHI 403	1~230 V, 50 Hz	1¼	1	375.0	204.0	88.0	109.5	104.0	216.0	106.0	52.0	90.0	10.7
MHI 403	3~230/400 V, 50 Hz	1¼	1	375.0	204.0	88.0	109.5	104.0	192.0	–	52.0	90.0	9.8
MHI 404	1~230 V, 50 Hz	1¼	1	423.0	252.0	88.0	157.5	104.0	216.0	106.0	52.0	90.0	12.2
MHI 404	3~230/400 V, 50 Hz	1¼	1	457.0	252.0	110.0	157.5	104.0	219.0	52.0	52.0	90.0	13.0
MHI 405	1~230 V, 50 Hz	1¼	1	448.0	252.0	103.5	157.5	104.0	224.0	106.0	52.0	90.0	15.2
MHI 405	3~230/400 V, 50 Hz	1¼	1	457.0	252.0	110.0	157.5	104.0	219.0	52.0	52.0	90.0	13.8
MHI 406	1~230 V, 50 Hz	1¼	1	472.0	276.0	103.5	181.5	104.0	224.0	106.0	52.0	90.0	17.8
MHI 406	3~230/400 V, 50 Hz	1¼	1	481.0	276.0	110.0	181.5	104.0	219.0	52.0	52.0	90.0	16.0

Pump curves, motor data Wilo-Economy MHI

Wilo-Economy MHI 802 – 805

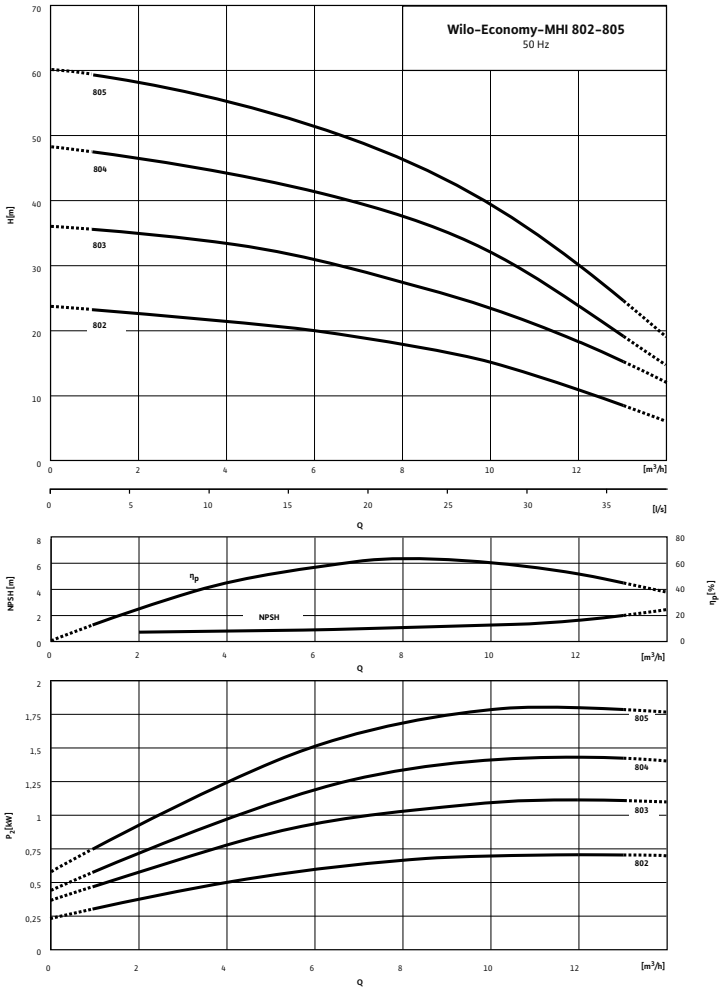

Pump curves in accordance with ISO 9906, class 2

Motor data

Wilo-Economy...	Mains connection	Nominal motor power	Nominal current 1~230 V, 50 Hz	Nominal current 3~230 V, 50 Hz	Nominal current 3~400 V, 50 Hz	Motor efficiency		
		P_2	I_N			$\eta_{m\,50\%}$	$\eta_{m\,75\%}$	$\eta_{m\,100\%}$
		kW	A			%		
MHI 802	1~230 V, 50 Hz	0.75	5.1	–	–	–	–	–
MHI 802	3~230/400 V, 50 Hz	0.75	–	3.30	1.91	76.0	77.4	77.4
MHI 803	1~230 V, 50 Hz	1.10	7.2	–	–	–	–	–
MHI 803	3~230/400 V, 50 Hz	1.10	–	4.80	2.80	78.0	79.6	79.6
MHI 804	1~230 V, 50 Hz	1.50	9.2	–	–	–	–	–
MHI 804	3~230/400 V, 50 Hz	1.50	–	6.40	3.70	80.0	81.3	81.3
MHI 805	3~230/400 V, 50 Hz	2.20	–	9.00	5.20	82.0	83.2	83.2

Motor efficiency based on 400 V, 50 Hz

Dimensions, weights Wilo-Economy MHI

Dimension drawing

Wilo-Economy MHI 202 - 1604

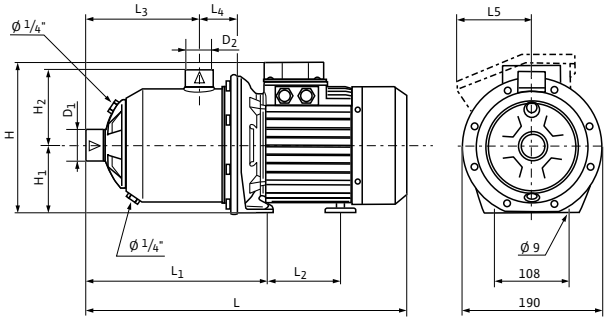

Terminal box, AC version (Represented by broken line)

Dimensions, weights

Wilo-Economy...	Mains connection	Dimensions											Weight approx.
		Ø D1	*Ø D2*	*L*	*L1*	*L2*	*L3*	*H2*	*H*	*L5*	*L4*	*H1*	*m*
		Rp		mm									kg
MHI 802	1~230 V, 50 Hz	1½	1¼	387.0	216.0	88.0	121.5	104.0	216.0	106.0	52.0	90.0	15.8
MHI 802	3~230/400 V, 50 Hz	1½	1¼	421.0	216.0	110.0	121.5	104.0	219.0	52.0	52.0	90.0	12.3
MHI 803	1~230 V, 50 Hz	1½	1¼	412.0	216.0	103.5	121.5	104.0	224.0	106.0	52.0	90.0	14.5
MHI 803	3~230/400 V, 50 Hz	1½	1¼	421.0	216.0	110.0	121.5	104.0	219.0	52.0	52.0	90.0	13.1
MHI 804	1~230 V, 50 Hz	1½	1¼	472.0	276.0	103.5	181.5	104.0	224.0	106.0	52.0	90.0	16.0
MHI 804	3~230/400 V, 50 Hz	1½	1¼	523.0	276.0	148.0	181.5	104.0	240.0	52.0	52.0	90.0	19.1
MHI 805	3~230/400 V, 50 Hz	1½	1¼	523.0	276.0	148.0	181.5	104.0	240.0	52.0	52.0	90.0	20.5

Pump curves, motor data Wilo-Economy MHI

Wilo-Economy MHI 1602 – 1604

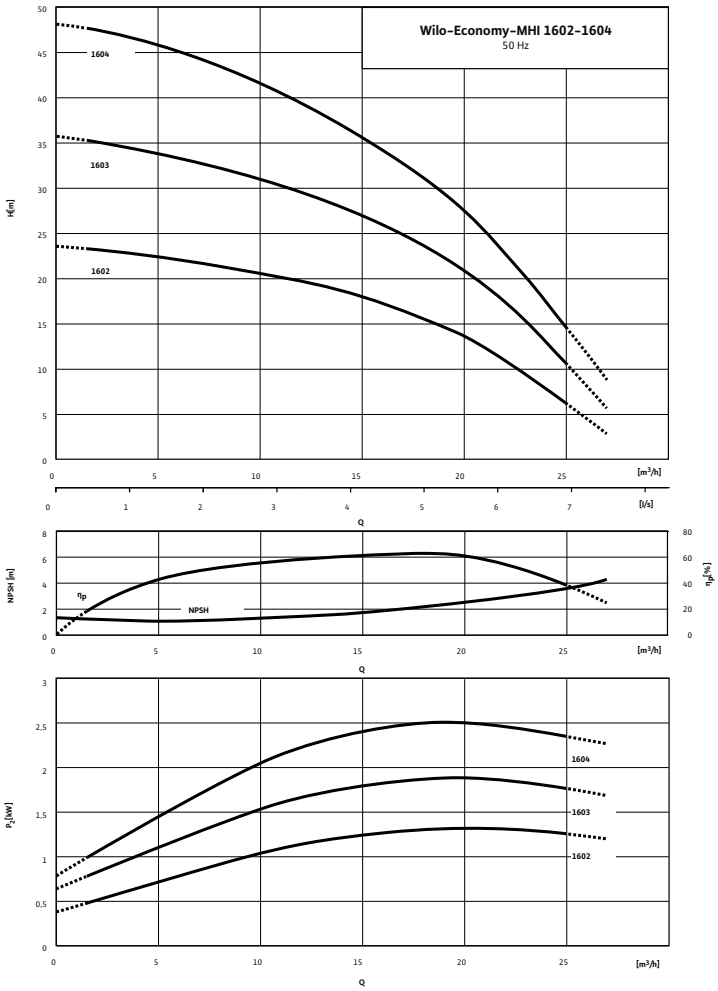

Pump curves in accordance with ISO 9906, class 2

Motor data

Wilo-Economy...	Mains connection	Nominal motor power	Nominal current 1~230 V, 50 Hz	Nominal current 3~230 V, 50 Hz	Nominal current 3~400 V, 50 Hz	Motor efficiency		
		P_2	I_N			$\eta_{m\ 50\%}$	$\eta_{m\ 75\%}$	$\eta_{m\ 100\%}$
		kW	A			%		
MHI 1602	3~230/400 V, 50 Hz	1.50	–	6.40	3.70	80.0	81.3	81.3
MHI 1603	3~230/400 V, 50 Hz	2.20	–	9.00	5.20	82.0	83.2	83.2
MHI 1604	3~230/400 V, 50 Hz	2.20	–	9.00	5.20	82.0	83.2	83.2

Motor efficiency based on 400 V, 50 Hz

Dimensions, weights Wilo-Economy MHI

Dimension drawing

Wilo-Economy MHI 202 - 1604

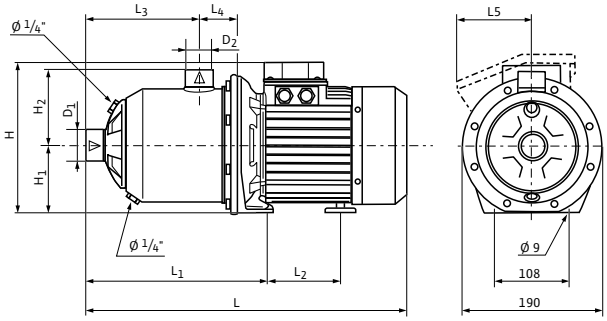

Terminal box, AC version (Represented by broken line)

Dimensions, weights													
Wilo-Economy...	**Mains connection**	**Dimensions**											**Weight approx.**
		Ø D1	*Ø D2*	*L*	*L1*	*L2*	*L3*	*H2*	*H*	*L5*	*L4*	*H1*	*m*
		Rp		mm									kg
MHI 1602	3~230/400 V, 50 Hz	2	1½	482.0	236.0	148.0	138.0	105.0	240.0	52.0	55.0	90.0	19.0
MHI 1603	3~230/400 V, 50 Hz	2	1½	482.0	235.5	148.0	138.0	105.0	240.0	52.0	55.0	90.0	21.4
MHI 1604	3~230/400 V, 50 Hz	2	1½	526.0	280.5	148.0	183.0	105.0	240.0	52.0	55.0	90.0	22.1

Series description Wilo-Economy MHIL

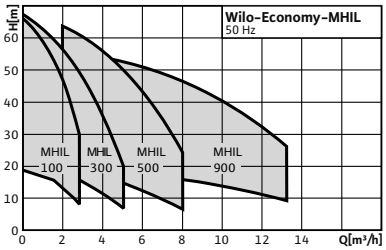

Design
Non-self-priming multistage pump

Application
- Water supply and pressure boosting
- Commerce and industry
- Washing and spraying systems
- Rainwater utilisation
- Cooling and cold water circuits

Type key

Example:	**MHIL 302N-E-3-400-50-2**
MHIL	Multistage horizontal high-pressure centrifugal pump
3	Volume flow in m^3/h
02	Number of impellers
N	IE2 motor
E	Type of gasket E = EPDM V = FKM (Viton)
3	1 = 1~ (single-phase AC) 3 = 3~ (three-phase AC)
400	Connection voltage in V
50	Frequency in Hz
2	Number of poles

Special features/product advantages
- IE2-IEC three-phase AC motor (≥ 0.75 kW)
- Impellers and stage chambers made of 1.4301 stainless steel (AISI 304)
- Pump housing made of EN-GJL-250 cast iron, cataphoretic coated
- All relevant components are KTW, WRAS, ACS certified
- Single-phase AC and three-phase AC versions

Equipment/function
- Pump in monobloc design
- Threaded connection
- Single-phase or three-phase motor
- Single-phase AC motor with integrated thermal motor protection

Technical data
- Mains connection 1~230 V (±10 %), 50 Hz or optionally 220 V (±10 %), 60 Hz
- Mains connection 3~230 V (±10 %), 50 Hz (Δ) or optionally 220 V (±10 %), 50 Hz (Δ), 400 V (±10 %), 50 Hz (Y) or optionally 460 V (±10 %), 60 Hz (Y)
- Fluid temperature of -15 to +90 °C
- Max. operating pressure 10 bar
- Max. inlet pressure of 6 bar
- Protection class 1~: IP X4; 3~: IP 54
- Nominal diameters of pipe connections on pressure side: Rp 1 or Rp 1 ¼, depending on type
- Nominal diameters of pipe connections on suction side Rp 1, Rp 1 ¼ or Rp 1 ½, depending on type

Materials
- Impellers stainless steel 1.4301
- Stage chambers stainless steel 1.4301
- Shaft stainless steel 1.4028
- Seal EPDM
- Housing cover EN-GJL-250 (cataphoretic-coated)
- Lower housing section EN-GJL-250 (cataphoretic-coated)
- Mechanical seal SiC/carbon
- Bearing tungsten carbide
- Pump base EN-GJL-250 (cataphoretic-coated)

Scope of delivery
- Pump
- Installation and operating instructions

Series description Wilo-Economy MHIL

Electrical connection

3~400 V Y

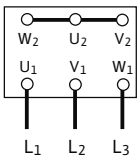

1~230 V

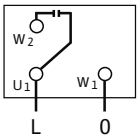

3~230 V Δ

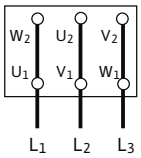

Series description Wilo-Multivert MVIL

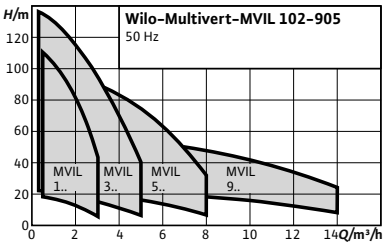

Design
Non-self-priming multistage pump

Application
- Water supply and pressure boosting
- Commerce and industry
- Washing and spraying systems
- Rainwater utilisation
- Cooling and cold water circuits

Type key

Example:	**MVIL 107N-16/E/3-400-50-2**
MVIL	Multistage vertical high-pressure centrifugal pump
1	Volume flow in m^3/h
07	Number of impellers
N	Standardised motor
16	Maximum operating pressure in bar
E	Type of gasket E = EPDM
3	1 = 1~ (single-phase current) 3 = 3~ (three-phase current)
400	Connection voltage in V
50	Frequency in Hz
2	Number of poles

Special features/product advantages
- IE2-IEC three-phase AC motor (≥ 0.75 kW)
- Stainless steel hydraulics 1.4301 (AISI 304)
- Pump housing made of cast iron EN-GJL-250, cataphoretic coated
- All relevant components are KTW, WRAS, ACS certified
- Single-phase AC and three-phase AC versions

Equipment/function
- Pump in in-line design
- Hydraulics in 1.4301, pump housing in EN-GJL-250
- Oval flange
- Single-phase or three-phase AC motor
- Single-phase AC motor with integrated thermal motor protection

Technical data
- Mains connection 1~230 V (±10 %), 50 Hz or optionally 220 V (±10 %), 60 Hz
- Mains connection 3~230 V (±10 %), 50 Hz (Δ), optionally 220 V (±10 %), 60 Hz (Δ), 400 V (±10 %), 50 Hz (Y) or optionally 380 V (±10 %), 60 Hz (Y)
- Fluid temperature -15 to +90 °C
- Max. operating pressure 10 bar or 16 bar, depending on type
- Max. inlet pressure 6 bar or 10 bar, depending on type
- Protection class IP 54
- Nominal diameters of pipe connections Rp 1, Rp 1¼ or Rp 1½, depending on type

Materials
- Impellers 1.4301 stainless steel
- Stage chambers 1.4301 stainless steel
- Shaft stainless steel 1.4404
- Gasket EPDM
- Housing cover EN-GJL-250 (cataphoretic-coated)
- Lower housing section EN-GJL-250 (cataphoretic-coated)
- Mechanical seal SiC/carbon
- Bearing, tungsten carbide

Scope of delivery
- Pump
- Oval counter flanges Rp 1 to Rp 1 1/2
- Installation and operating instructions

Series description Wilo-Multivert MVIL

Electrical connection

3~400 V Y

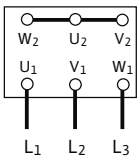

1~230 V

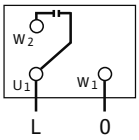

3~230 V Δ

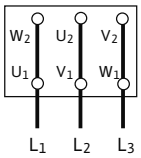

Series overview

Series	**Wilo-SiBoost Smart 1 Helix VE**	**Wilo-Comfort-Vario COR-1 Helix VE...-GE**
Product photo		
Duty chart	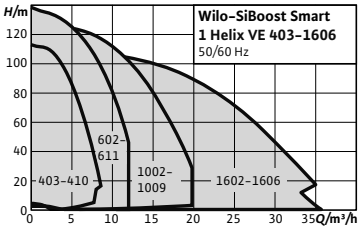	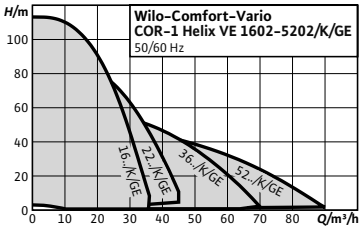
Design	High-efficiency connection-ready water-supply unit (non-self-priming) with one vertically arranged stainless steel high-pressure multi-stage centrifugal pump in glanded version of the Helix VE series.	Highly efficient connection-ready water-supply unit with vertically-mounted stainless steel high-pressure multistage centrifugal pump in glanded version, with integrated frequency converter.
Application	• Fully automatic water supply in inlet mode, either from the public water supply network or from a tank • Pumping of potable water, process water, cooling water, fire water (apart from fire-extinguishing systems in accordance with DIN 14462) or other water mixtures that do not attack the materials used chemically or mechanically and do not contain abrasive or long-fibre constituents	• Fully automatic water supply in inlet mode, either from the public water supply network or from a tank. • Pumping of potable water, process water, cooling water, fire water (apart from fire-extinguishing systems in accordance with DIN14462) or other water mixtures that do not attack the materials used chemically or mechanically and do not contain abrasive or long-fibre constituents
H_{max}	140 m	113 m
Q_{max}	35 m^3/h	90 m^3/h
Special features/ product advantages	• Heavy-duty system with stainless-steel Helix VE high-pressure multi-stage centrifugal pump and air-cooled integrated frequency converter • High-efficiency pump hydraulics in conjunction with IE2-equivalent standard motors • Superproportionally large frequency converter control range from 25 Hz up to a maximum of 60 Hz (version dependent) • Integrated full motor protection via PTC	• Sturdy system with to Helix VE series stainless-steel high-pressure multistage centrifugal pumps with air-cooled integrated frequency converter • Highly efficient pump hydraulics in combination with IE2-equivalent standard motors • Wide hydraulic range through the use of all pumps in the Helix VE series • Superproportionally large frequency converter control range from 25 up to max. 60 Hz (depending on the version) • Built-in full motor protection with PTC thermistor sensors • Integrated dry-running detection with automatic deactivation in the event of low water via performance characteristics of the motor control electronics
Further information	Series information from page 527 Wilo online catalogue at www.wilo.com	Series information from page 551 Wilo online catalogue at www.wilo.com

Pressure boosting

Single pump systems, speed-controlled

Series overview

Series	**Wilo-Comfort-Vario COR-1 Helix VE.../VR**
Product photo	
Duty chart	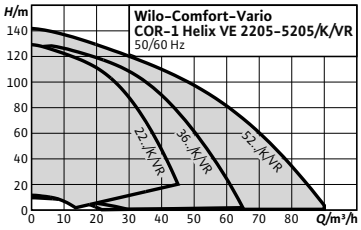
Design	Highly efficient, ready for connection water supply system with multistage, vertical stainless steel high-pressure multistage centrifugal pump in glanded version, with integrated frequency converter and VR Vario controller for motors from 7.5 kW.
Application	• For fully automatic water supply in inlet mode, either from the public water supply system or from a tank. • Pumping of potable water, process water, cooling water, fire water (apart from fire-extinguishing systems in accordance with DIN14462) or other water mixtures that do not attack the materials used chemically or mechanically and do not contain abrasive or long-fibre constituents
H_{max}	140 m
Q_{max}	90 m^3/h
Special features/ product advantages	• Sturdy system with to Helix VE series stainless-steel high-pressure multistage centrifugal pumps with air-cooled integrated frequency converter • Highly efficient pump hydraulics in combination with IE2-equivalent standard motors • Wide hydraulic range through the use of all pumps in the Helix VE series • Superproportionally large frequency converter control range from 25 up to max. 60 Hz (depending on the version) • Built-in full motor protection with PTC thermistor sensors • Integrated dry-running detection with automatic deactivation in the event of low water via performance characteristics of the motor control electronics
Further information	Series information from page 563 Wilo online catalogue at www.wilo.com

Series overview

Series	**Wilo-Comfort-Vario COR-1 MVIE...-GE**	**Wilo-Comfort-Vario COR-1 MVIE.../VR**
Product photo		
Duty chart	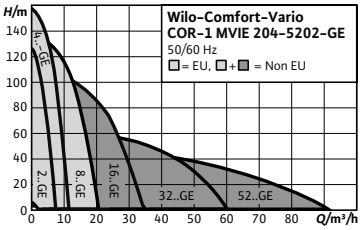	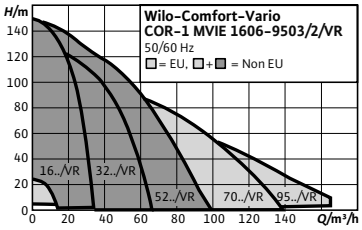
Design	Water-supply unit with a non-self-priming high-pressure multistage centrifugal pump and integrated speed control	Water-supply unit with a non-self-priming high-pressure multistage centrifugal pump with integrated frequency converter and Vario controller VR for motors from 7.5 kW
Application	• Fully automatic water supply in inlet mode, either from the public water supply network or from a tank. • Pumping of potable water, process water, cooling water, water for fire-fighting or other water mixtures that do not chemically or mechanically attack the materials used and do not contain abrasive or long-fibre constituents	• Fully automatic water supply in inlet mode, either from the public water supply network or from a tank. • Pumping of potable water, process water, cooling water, water for fire-fighting or other water mixtures that do not chemically or mechanically attack the materials used and do not contain abrasive or long-fibre constituents
H_{max}	160 m	150 m
Q_{max}	92 m^3/h	165 m^3/h
Special features/ product advantages	• Sturdy system due to MVIE series stainless-steel high-pressure multistage centrifugal pumps with air-cooled integrated frequency converter • IEC three-phase motor (level IE2. from 0.75 kW), 2-pole • Superproportionally large control range of the frequency converter • Integrated full motor protection via PTC • Integrated dry-running detection with automatic deactivation in the event of low water via performance characteristics of the motor control electronics	• Sturdy system due to MVIE series stainless-steel high-pressure multistage centrifugal pumps with air-cooled integrated frequency converter • IEC three-phase motor (level IE2. from 0.75 kW), 2-pole • Superproportionally large control range of the frequency converter • Integrated full motor protection via PTC • Integrated dry-running detection with automatic deactivation in the event of low water via performance characteristics of the motor control electronics
Further information	Series information from page 571 Wilo online catalogue at www.wilo.com	Series information from page 590 Wilo online catalogue at www.wilo.com

Pressure boosting

Single pump systems, speed-controlled

Series overview

Series	**Wilo-Comfort-N-Vario COR-1 MVISE...-GE**	**Wilo-Comfort-Vario COR-1 MHIE...-GE**
Product photo		
Duty chart	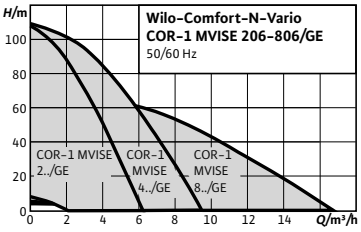	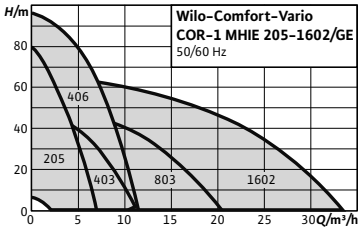
Design	Water-supply units with a non-self-priming glandless high-pressure multistage centrifugal pump and integrated speed control	Water-supply unit with a non-self-priming high-pressure multistage centrifugal pump and integrated speed control
Application	• For fully automatic water supply in inlet mode, either from the public water supply network or from a tank. • Pumping of potable water, process water, cooling water, water for fire-fighting or other water mixtures that do not chemically or mechanically attack the materials used and do not contain abrasive or long-fibre constituents	• For fully automatic water supply in inlet mode, either from the public water supply network or from a tank. • Pumping of potable water, process water, cooling water, water for fire-fighting or other water mixtures that do not chemically or mechanically attack the materials used and do not contain abrasive or long-fibre constituents
H_{max}	106 m	95 m
Q_{max}	17 m^3/h	34 m^3/h
Special features/ product advantages	• Virtually noiseless system through the use of a glandless stainless steel high-pressure multistage centrifugal pumps with integrated frequency converter • Up to 20 dB[A] quieter than conventional systems with comparable hydraulic output • Easily adjustable and operationally reliable due to the MVISE pump series used, with integrated dry-running detection and automatic deactivation in the event of low water	• Heavy-duty system due to MHIE series stainless steel high-pressure multistage centrifugal pumps with air-cooled integrated frequency converter • Superproportionally large control range of the frequency converter • Integrated full motor protection via PTC • Integrated dry-running detection with automatic deactivation in the event of low water via performance characteristics of the motor control electronics
Further information	Series information from page 607 Wilo online catalogue at www.wilo.com	Series information from page 616 Wilo online catalogue at www.wilo.com

Series overview

Series	**Wilo-Economy CO-1 Helix V.../CE+**	**Wilo-Economy CO-1 MVI.../ER**
Product photo		
Duty chart	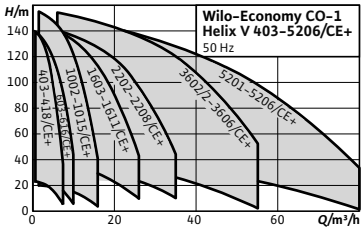	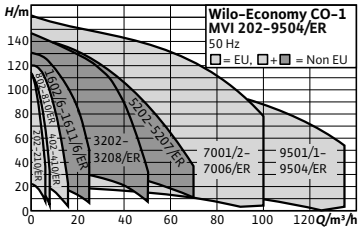
Design	High-efficiency, connection-ready water-supply unit. With multistage, vertical stainless steel high-pressure multistage centrifugal pump in glanded version, incl. Economy-Controller CE+.	Water-supply unit with a non-self-priming high-pressure multistage centrifugal pump
Application	• Fully automatic water supply in inlet mode, either from the public water supply network or from a tank. • Pumping of potable water, process water, cooling water, fire water (apart from fire-extinguishing systems in accordance with DIN14462) or other water mixtures that do not attack the materials used chemically or mechanically and do not contain abrasive or long-fibre constituents	• Fully automatic water supply in inlet mode, either from the public water supply network or from a tank. • Pumping of potable water, process water, cooling water, water for fire-fighting or other water mixtures that do not chemically or mechanically attack the materials used and do not contain abrasive or long-fibre constituents
H_{max}	158 m	160 m
Q_{max}	80 m^3/h	135 m^3/h
Special features/ product advantages	• Heavy-duty system due to stainless steel high-pressure multi-stage centrifugal pumps of the Helix V series • High-efficiency pump hydraulics in conjunction with IE2 standard motors • Easily adjustable and operationally reliable due to the CE+ switchgear used	• Sturdy system due to stainless steel high-pressure multi-stage centrifugal pumps of the MVI series • IEC three-phase motors (Level IE2), from 0.75 kW, 2-pole • Wide hydraulic range through the use of all pumps in the MVI series • Easily adjustable and operationally reliable due to the ER-1 control unit used • Customised units on request
Further information	Series information from page 625 Wilo online catalogue at www.wilo.com	Series information from page 642 Wilo online catalogue at www.wilo.com

Pressure boosting

Single pump systems with fixed speed

Series overview

Series	**Wilo-Economy CO/T-1 MVI.../ER**	**Wilo-Economy CO-1 MVIS.../ER**
Product photo		
Duty chart	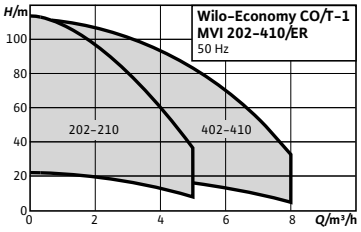	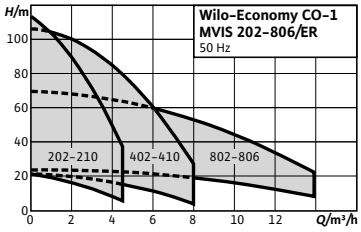
Design	Water-supply unit with system separation and a non-self-priming high-pressure multistage centrifugal pump	Water-supply unit with a glandless, non-self-priming high-pressure multistage centrifugal pump
Application	• Fully automatic water supply including break tank for indirect connection to the public water supply network • Pumping of potable water and process water, cooling water, water for fire-fighting or other water mixtures that do not chemically or mechanically attack the materials used and do not contain abrasive or long-fibre constituents	• Fully automatic water supply in inlet mode, either from the public water supply network or from a tank. • Pumping of potable water, secondary hot water, cooling water, fire water or other water mixtures that do not chemically or mechanically attack the materials used and do not contain abrasive or long-fibre constituents
H_{max}	110 m	110 m
Q_{max}	8 m^3/h	14 m^3/h
Special features/ product advantages	• Compact ready for connection system for all applications that require system separation • Sturdy system due to stainless steel high-pressure multistage centrifugal pumps of the MVI series • IEC three-phase motors (Level IE2), from 0.75 kW, 2-pole • Easily adjustable and operationally reliable due to the ER-1 control unit used	• Virtually noiseless system due to a glandless stainless-steel high-pressure multistage centrifugal pump • Up to 20 dB[A] quieter than conventional systems with comparable hydraulic output • Operationally reliable due to combination of MVIS pump series with ER-1 switchgear
Further information	Series information from page 660 Wilo online catalogue at www.wilo.com	Series information from page 666 Wilo online catalogue at www.wilo.com

Series description Wilo-SiBoost Smart 1 Helix VE

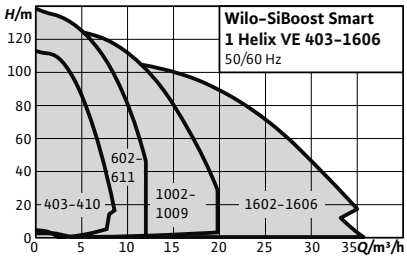

Design
High-efficiency connection-ready water-supply unit (non-self-priming) with one vertically arranged stainless steel high-pressure multi-stage centrifugal pump in glanded version of the Helix VE series.

Type key

Example:	**Wilo-SiBoost-Smart 1Helix VE 1004**
SiBoost Smart	Compact pressure boosting system with integrated speed control
1	Number of pumps
Helix VE	Pump series
10	Rated volume flow [m^3/h] of the single pump
04	Number of single pump stages

Application
- Fully automatic water supply in inlet mode, either from the public water supply network or from a tank
- Pumping of potable water, process water, cooling water, fire water (apart from fire-extinguishing systems in accordance with DIN 14462) or other water mixtures that do not attack the materials used chemically or mechanically and do not contain abrasive or long-fibre constituents

Special features/product advantages
- Heavy-duty system with stainless-steel Helix VE high-pressure multi-stage centrifugal pump and air-cooled integrated frequency converter
- High-efficiency pump hydraulics in conjunction with IE2-equivalent standard motors
- Superproportionally large frequency converter control range from 25 Hz up to a maximum of 60 Hz (version dependent)
- Integrated full motor protection via PTC

Technical data
- Mains connection 3~400 V ± 10%, 50 Hz; 3~380/440 V ±10 %, 60 Hz
- Max. fluid temperature +50 °C (+70 °C optional)
- Max. ambient temperature 40 °C
- Operating pressure 16 bar (25 bar optional)
- Inlet pressure 10 bar
- Nominal connection diameters on discharge side R 1¼" - R 1½"
- Nominal connection diameters on inlet side Rp 1¼" - Rp 2"
- Speed range 1500-3770 rpm
- Protection class: IP 54
- Fuse protection on mains side A, AC 3 according to motor power and EVU regulations
- Approved fluids (other fluids on request):
  - Potable water and secondary hot water
  - Cooling water
  - Fire water
- Note on fluids: Approved fluids are generally waters which do not attack the materials used, neither chemically nor mechanically, and do not contain any abrasive or long-fibre constituents.

Equipment/function
- One pump of the Helix VE series with IE2-equivalent standard motor and infinitely variable auto control with integrated frequency converter
- Base frame made of galvanised steel, with height-adjustable vibration absorbers for insulation against structure-borne noise
- Parts that come in contact with the fluid are corrosion-resistant
- Stainless steel 1.4301
- Check valve, pressure side
- Non-return valve, pressure side
- Diaphragm pressure vessel 8 l, PN16, pressure side
- Pressure gauge, pressure side
- Optional low-water cut-out switchgear and pressure gauge, suction side

Materials
- Impellers, diffusors, stage housing made of stainless steel 1.4307
- Pump housing made of stainless steel 1.4301
- Shaft made of stainless steel 1.4057
- 1.4404 shaft protection sleeve
- O-ring gaskets made of EPDM (FKM gasket on request)
- Piping made of stainless steel 1.4301

Description/design
- Base frame: galvanised steel, with height-adjustable vibration absorbers for comprehensive insulation against structure-borne noise
- Pipework: Complete pipework made of stainless steel, suitable for the connection of all conventional piping materials; the pipework is dimensioned according to the overall hydraulic performance of the pressure boosting system
- Pumps: One pump of the Helix VE 4.., 6.., 10.., 16... series is used The air-cooled frequency converters mounted on the pump motor enable infinitely variable control between 25 Hz and a maximum of 60 Hz for all pumps of this series. All pump parts which come into contact with

Series description Wilo-SiBoost Smart 1 Helix VE

the fluid are made of stainless steel; other versions on request. KTW/WRAS/ACS approval for all parts that come in contact with the fluid
- Valves: The pump is fitted on the suction and pressure side with a standard check valve with DVGW approval mark and on the pressure side with a DVGW/KTW-approved non-return valve.
- Diaphragm pressure vessel (accessories): 8 l/PN16 arranged on the discharge side with a diaphragm made of butyl rubber, with DVGW/KTW approval, completely safe in accordance with food safety laws; for testing and inspection purposes, with a shut-off ball cock with drain and throughflow fitting with DVGW/KTW approval in accordance with DIN 4807
- Pressure sensor: 4 to 20 mA, arranged on the discharge side, for control of the frequency converter

Scope of delivery
- Factory-mounted, connection-ready pressure boosting system checked for functionality and impermeability
- Packaging
- Installation and operating instructions

Electrical connection

3~400 V

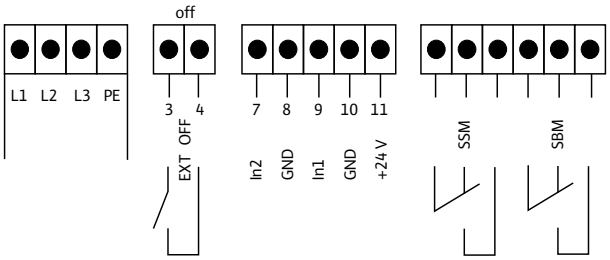

Optional main switch, optional pressure switch kit for low-water cut-out (switches pump via ext. I/O)

Electrical connection

3~400 V; 5.5-7.5 kW

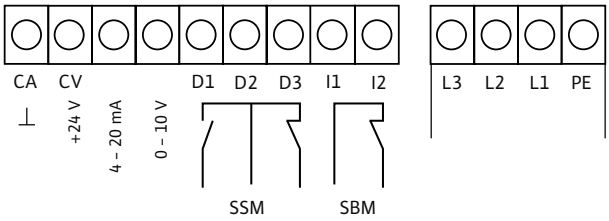

Technical data Wilo-SiBoost Smart 1 Helix VE

Pump curves

Wilo-SiBoost Smart 1 Helix VE 403

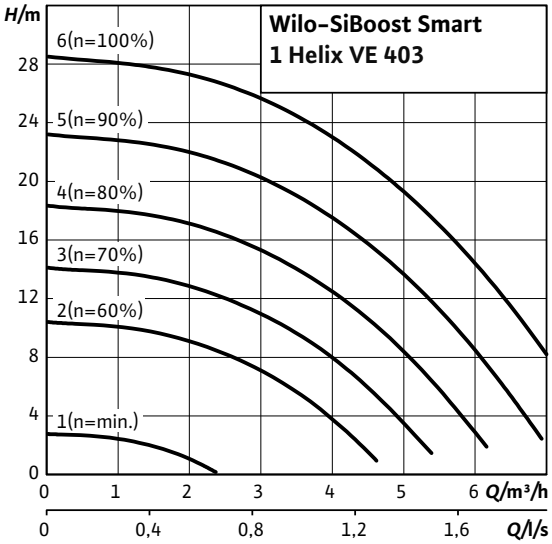

Dimension drawing

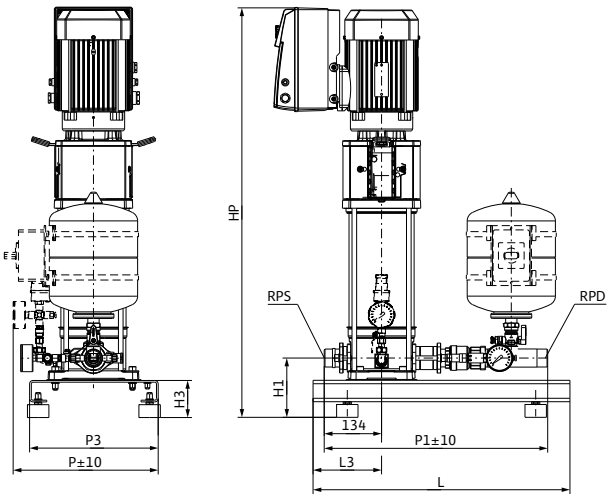

Sample systems are shown.
Accessories (to be ordered separately): Optional WMS low-water cut-out switchgear kit, main switch
Installation surface: flat and horizontal
Installation location: dry, well ventilated and frost-proof

Motor data

Wilo-SiBoost Smart 1...	Nominal motor power	Nominal current 3~400 V, 50 Hz	Motor efficiency		
	P_2	I_N	$\eta_{m\,50\%}$	$\eta_{m\,75\%}$	$\eta_{m\,100\%}$
	kW	A	%		
Helix VE 403	0.55	1.7	74.0	78.0	79.0

Motor efficiency based on 400 V, 50 Hz

Dimensions, weights

Wilo-SiBoost Smart 1...	Nominal diameters of the pipe connections on suction side	Nominal diameters of pipe connections on the pressure side	Dimensions									Weight approx.
	RPS	*RPD*	*H*	*H1*	*H3*	*HP*	*L*	*L3*	*P*	*P1*	*P3*	*m*
			mm									kg
Helix VE 403	Rp 1¼	R 1¼	710	140	90	710	600	160	340	470	300	49

Technical data Wilo-SiBoost Smart 1 Helix VE

Pump curves

Wilo-SiBoost Smart 1 Helix VE 404

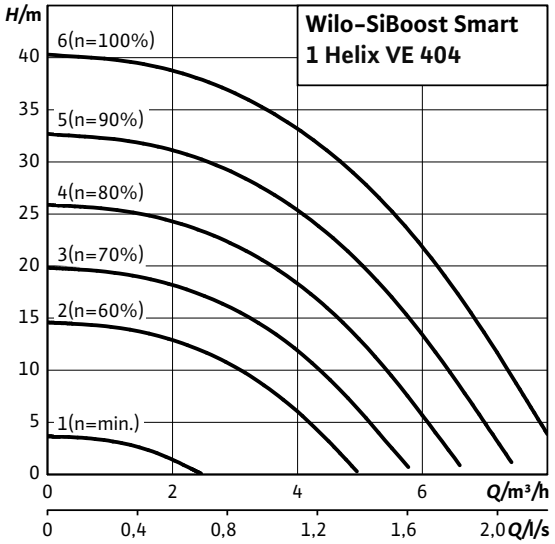

Dimension drawing

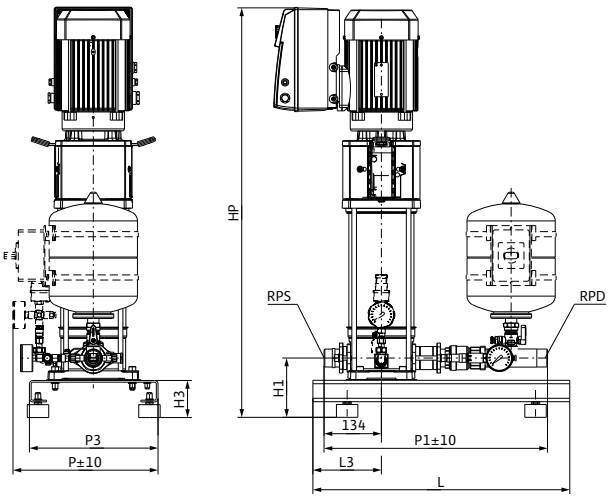

Sample systems are shown.
Accessories (to be ordered separately): Optional WMS low-water cut-out switchgear kit, main switch
Installation surface: flat and horizontal
Installation location: dry, well ventilated and frost-proof

Motor data

Wilo-SiBoost Smart 1...	Nominal motor power	Nominal current 3~400 V, 50 Hz	Motor efficiency		
	P_2	I_N	$\eta_{m\ 50\%}$	$\eta_{m\ 75\%}$	$\eta_{m\ 100\%}$
	kW	A	%		
Helix VE 404	0.75	3.2	74.0	78.0	79.0

Motor efficiency based on 400 V, 50 Hz

Dimensions, weights

Wilo-SiBoost Smart 1...	Nominal diameters of the pipe connections on suction side	Nominal diameters of pipe connections on the pressure side	Dimensions									Weight approx.
	RPS	*RPD*	*H*	*H1*	*H3*	*HP*	*L*	*L3*	*P*	*P1*	*P3*	*m*
			mm									kg
Helix VE 404	Rp 1¼	R 1¼	755	140	90	755	600	160	340	470	300	52

Technical data Wilo-SiBoost Smart 1 Helix VE

Pump curves

Wilo-SiBoost Smart 1 Helix VE 405

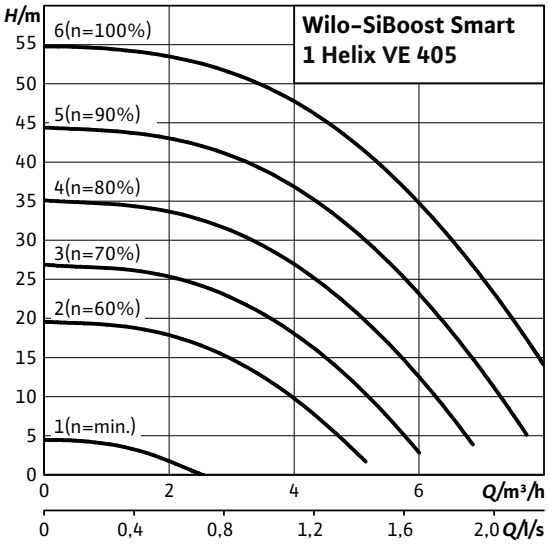

Dimension drawing

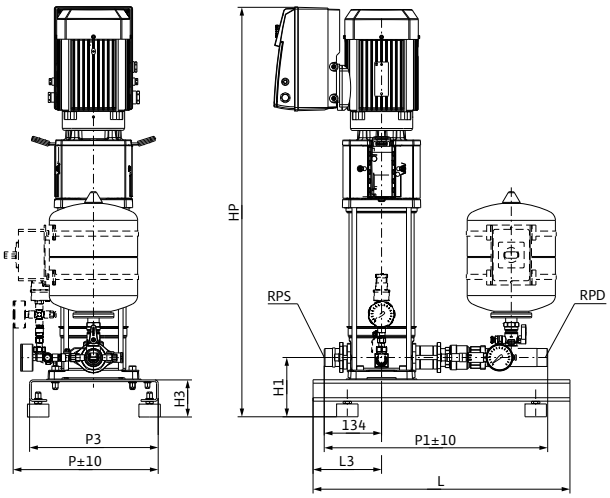

Sample systems are shown.
Accessories (to be ordered separately): Optional WMS low-water cut-out switchgear kit, main switch
Installation surface: flat and horizontal
Installation location: dry, well ventilated and frost-proof

Motor data

Wilo-SiBoost Smart 1...	Nominal motor power	Nominal current 3~400 V, 50 Hz	Motor efficiency		
	P_2	I_N	$\eta_{m\,50\%}$	$\eta_{m\,75\%}$	$\eta_{m\,100\%}$
	kW	A	%		
Helix VE 405	1.1	3.2	79.0	82.0	82.5

Motor efficiency based on 400 V, 50 Hz

Dimensions, weights

Wilo-SiBoost Smart 1...	Nominal diameters of the pipe connections on suction side	Nominal diameters of pipe connections on the pressure side	Dimensions									Weight approx.
	RPS	*RPD*	*H*	*H1*	*H3*	*HP*	*L*	*L3*	*P*	*P1*	*P3*	*m*
			mm									kg
Helix VE 405	Rp 1¼	R 1¼	776	140	90	776	600	160	340	470	300	52

Pressure boosting

Single pump systems, speed-controlled

Technical data Wilo-SiBoost Smart 1 Helix VE

Pump curves

Wilo-SiBoost Smart 1 Helix VE 407

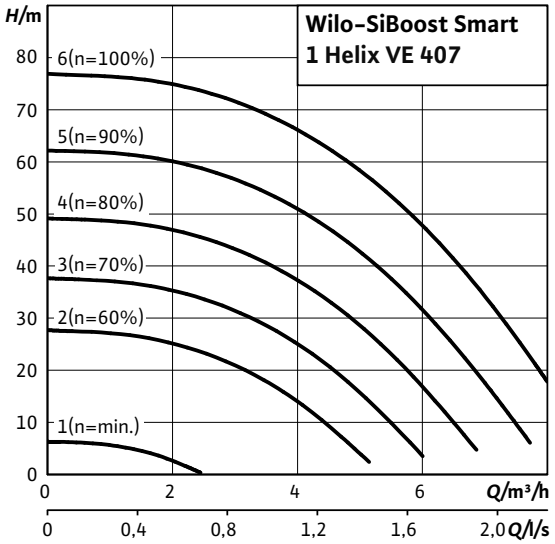

Dimension drawing

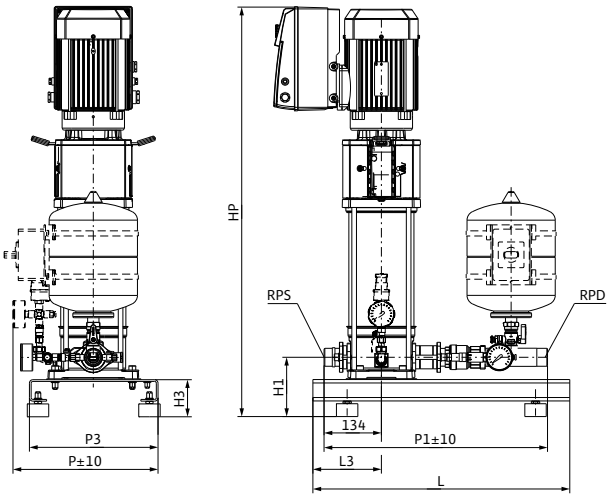

Sample systems are shown.
Accessories (to be ordered separately): Optional WMS low-water cut-out switchgear kit, main switch
Installation surface: flat and horizontal
Installation location: dry, well ventilated and frost-proof

Motor data

Wilo-SiBoost Smart 1...	Nominal motor power	Nominal current 3~400 V, 50 Hz	Motor efficiency		
	P_2	I_N	$\eta_{m\ 50\%}$	$\eta_{m\ 75\%}$	$\eta_{m\ 100\%}$
	kW	A	%		
Helix VE 407	1.5	5.6	79.0	82.0	84.0

Motor efficiency based on 400 V, 50 Hz

Dimensions, weights

Wilo-SiBoost Smart 1...	Nominal diameters of the pipe connections on suction side	Nominal diameters of pipe connections on the pressure side	Dimensions									Weight approx.
	RPS	*RPD*	*H*	*H1*	*H3*	*HP*	*L*	*L3*	*P*	*P1*	*P3*	*m*
			mm									kg
Helix VE 407	Rp 1¼	R 1¼	875	140	90	875	600	160	340	470	300	62

Technical data Wilo-SiBoost Smart 1 Helix VE

Pump curves

Wilo-SiBoost Smart 1 Helix VE 410

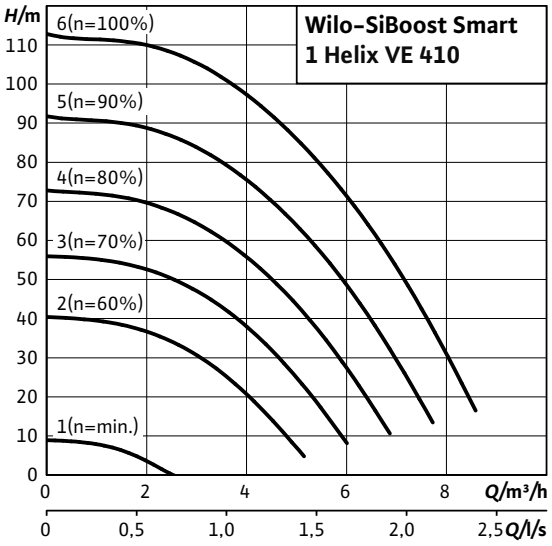

Dimension drawing

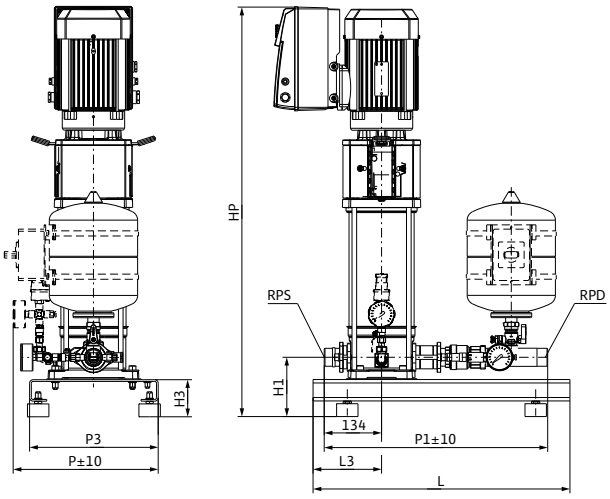

Sample systems are shown.
Accessories (to be ordered separately): Optional WMS low-water cut-out switchgear kit, main switch
Installation surface: flat and horizontal
Installation location: dry, well ventilated and frost-proof

Motor data

Wilo-SiBoost Smart 1...	Nominal motor power	Nominal current 3~400 V, 50 Hz	Motor efficiency		
	P_2	I_N	$\eta_{m\,50\%}$	$\eta_{m\,75\%}$	$\eta_{m\,100\%}$
	kW	A	%		
Helix VE 410	2.2	5.6	81.0	84.0	85.5

Motor efficiency based on 400 V, 50 Hz

Dimensions, weights

Wilo-SiBoost Smart 1...	Nominal diameters of the pipe connections on suction side	Nominal diameters of pipe connections on the pressure side	Dimensions									Weight approx.
	RPS	*RPD*	*H*	*H1*	*H3*	*HP*	*L*	*L3*	*P*	*P1*	*P3*	*m*
			mm									kg
Helix VE 410	Rp 1¼	R 1¼	955	140	90	955	600	160	340	470	300	64

Technical data Wilo-SiBoost Smart 1 Helix VE

Pump curves

Wilo-SiBoost Smart 1 Helix VE 602

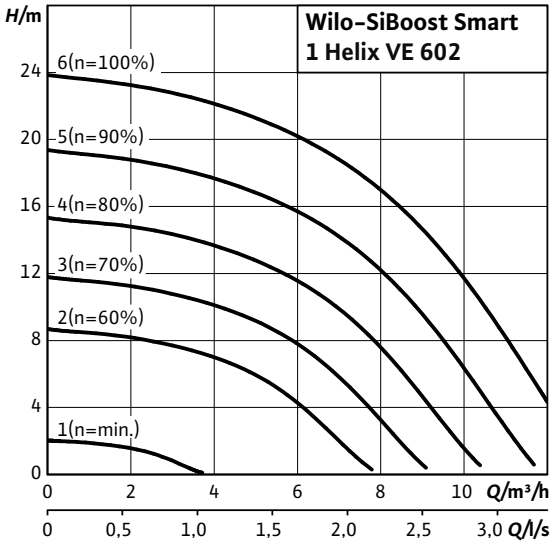

Dimension drawing

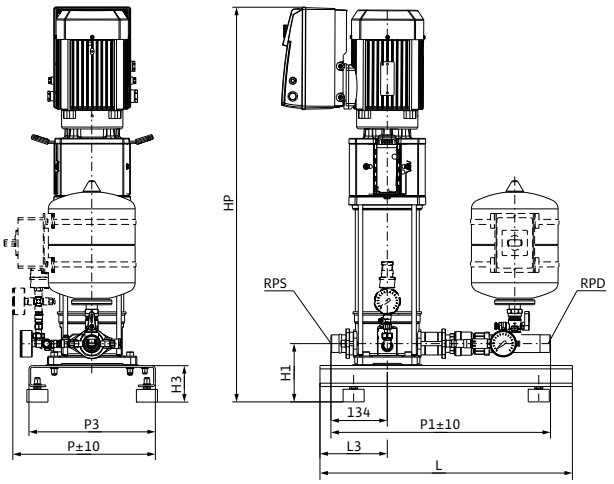

Sample systems are shown.
Accessories (to be ordered separately): Optional WMS low-water cut-out switchgear kit, main switch
Installation surface: flat and horizontal
Installation location: dry, well ventilated and frost-proof

Motor data

Wilo-SiBoost Smart 1...	Nominal motor power	Nominal current 3~400 V, 50 Hz	Motor efficiency		
	P_2	I_N	$\eta_{m\ 50\%}$	$\eta_{m\ 75\%}$	$\eta_{m\ 100\%}$
	kW	A	%		
Helix VE 602	0.75	3.2	74.0	78.0	79.0

Motor efficiency based on 400 V, 50 Hz

Dimensions, weights

Wilo-SiBoost Smart 1...	Nominal diameters of the pipe connections on suction side	Nominal diameters of pipe connections on the pressure side	Dimensions									Weight approx.
	RPS	*RPD*	*H*	*H1*	*H3*	*HP*	*L*	*L3*	*P*	*P1*	*P3*	*m*
			mm									kg
Helix VE 602	Rp 1¼	R 1¼	730	140	90	730	600	160	340	470	300	52

Technical data Wilo-SiBoost Smart 1 Helix VE

Pump curves

Wilo-SiBoost Smart 1 Helix VE 603

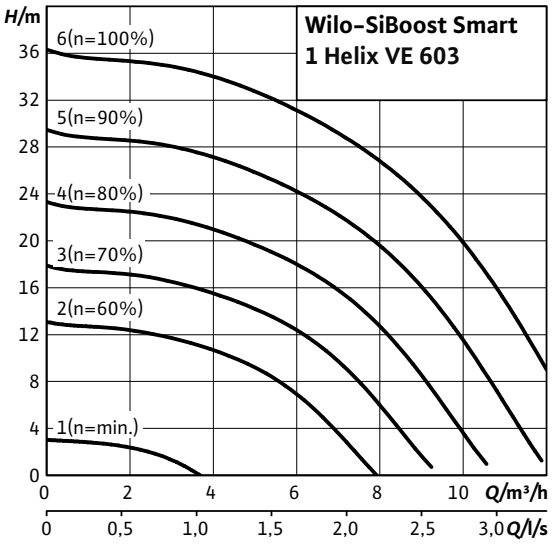

Dimension drawing

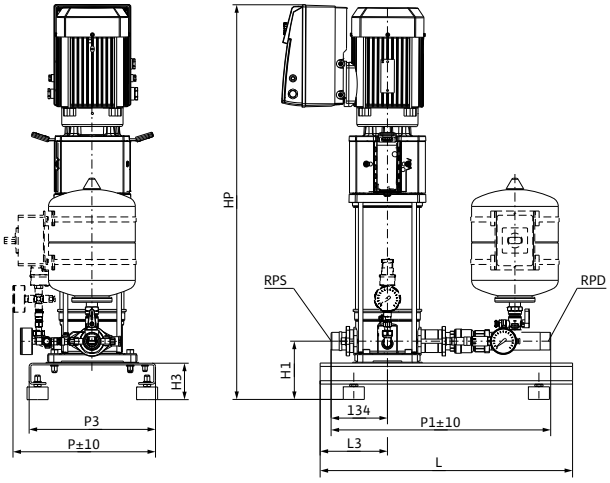

Sample systems are shown.
Accessories (to be ordered separately): Optional WMS low-water cut-out switchgear kit, main switch
Installation surface: flat and horizontal
Installation location: dry, well ventilated and frost-proof

Motor data

Wilo-SiBoost Smart 1...	Nominal motor power	Nominal current 3~400 V, 50 Hz	Motor efficiency		
	P_2	I_N	$\eta_{m\,50\%}$	$\eta_{m\,75\%}$	$\eta_{m\,100\%}$
	kW	A	%		
Helix VE 603	1.1	3.2	79.0	82.0	82.5

Motor efficiency based on 400 V, 50 Hz

Dimensions, weights

Wilo-SiBoost Smart 1...	Nominal diameters of the pipe connections on suction side	Nominal diameters of pipe connections on the pressure side	Dimensions									Weight approx.
	RPS	*RPD*	*H*	*H1*	*H3*	*HP*	*L*	*L3*	*P*	*P1*	*P3*	*m*
			mm									kg
Helix VE 603	Rp 1¼	R 1¼	764	140	90	764	600	160	340	470	300	53

Technical data Wilo-SiBoost Smart 1 Helix VE

Pump curves

Wilo-SiBoost Smart 1 Helix VE 604

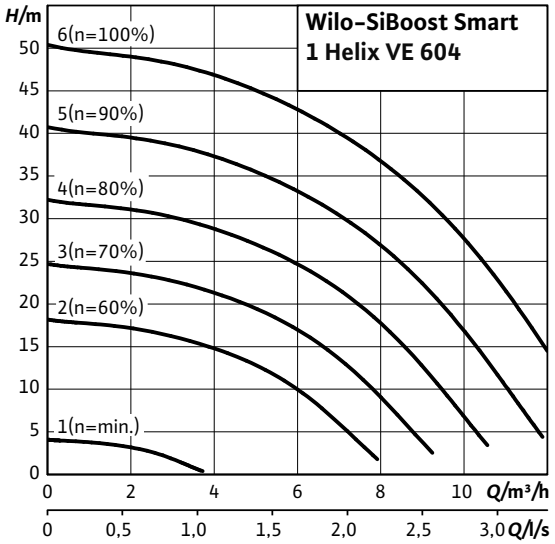

Dimension drawing

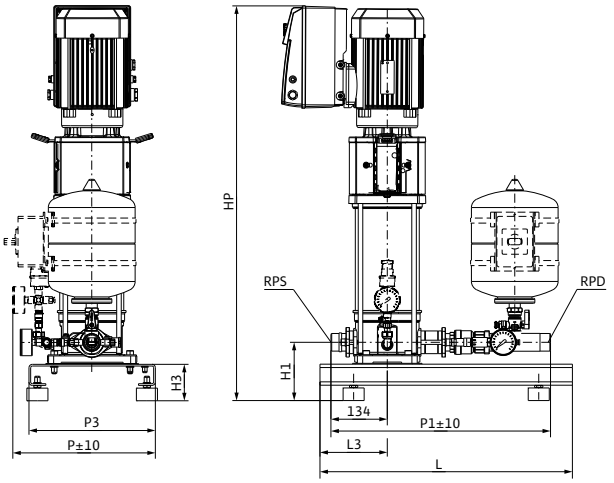

Sample systems are shown.
Accessories (to be ordered separately): Optional WMS low-water cut-out switchgear kit, main switch
Installation surface: flat and horizontal
Installation location: dry, well ventilated and frost-proof

Motor data

Wilo-SiBoost Smart 1...	Nominal motor power	Nominal current 3~400 V, 50 Hz	Motor efficiency		
	P_2	I_N	$\eta_{m\ 50\%}$	$\eta_{m\ 75\%}$	$\eta_{m\ 100\%}$
	kW	A	%		
Helix VE 604	1.5	5.6	79.0	82.0	84.0

Motor efficiency based on 400 V, 50 Hz

Dimensions, weights

Wilo-SiBoost Smart 1...	Nominal diameters of the pipe connections on suction side	Nominal diameters of pipe connections on the pressure side	Dimensions									Weight approx.
	RPS	*RPD*	*H*	*H1*	*H3*	*HP*	*L*	*L3*	*P*	*P1*	*P3*	*m*
			mm									kg
Helix VE 604	Rp 1¼	R 1¼	840	140	90	840	600	160	340	470	300	63

Technical data Wilo-SiBoost Smart 1 Helix VE

Pump curves

Wilo-SiBoost Smart 1 Helix VE 606

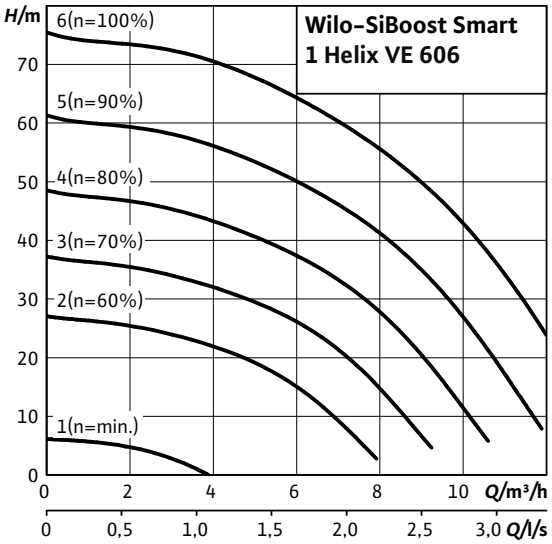

Dimension drawing

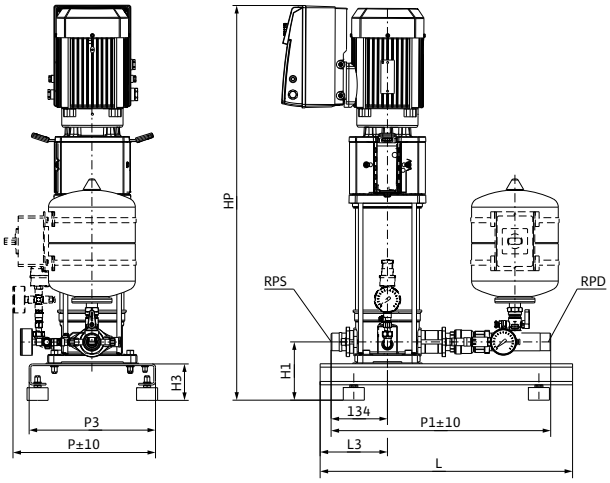

Sample systems are shown.
Accessories (to be ordered separately): Optional WMS low-water cut-out switchgear kit, main switch
Installation surface: flat and horizontal
Installation location: dry, well ventilated and frost-proof

Motor data

Wilo-SiBoost Smart 1...	Nominal motor power	Nominal current 3~400 V, 50 Hz	Motor efficiency		
	P_2	I_N	$\eta_{m\,50\%}$	$\eta_{m\,75\%}$	$\eta_{m\,100\%}$
	kW	A	%		
Helix VE 606	2.2	5.6	81.0	84.0	85.5

Motor efficiency based on 400 V, 50 Hz

Dimensions, weights

Wilo-SiBoost Smart 1...	Nominal diameters of the pipe connections on suction side	Nominal diameters of pipe connections on the pressure side	Dimensions									Weight approx.
	RPS	*RPD*	*H*	*H1*	*H3*	*HP*	*L*	*L3*	*P*	*P1*	*P3*	*m*
			mm									kg
Helix VE 606	Rp 1¼	R 1¼	930	140	90	930	600	160	340	470	300	65

Pressure boosting

Single pump systems, speed-controlled

Technical data Wilo-SiBoost Smart 1 Helix VE

Pump curves

Wilo-SiBoost Smart 1 Helix VE 608

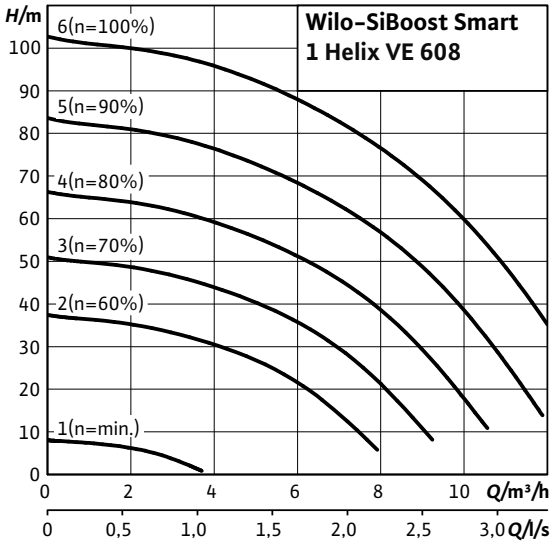

Dimension drawing

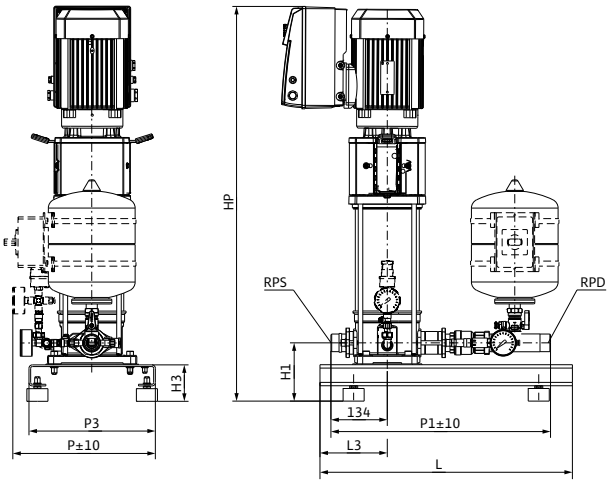

Sample systems are shown.
Accessories (to be ordered separately): Optional WMS low-water cut-out switchgear kit, main switch
Installation surface: flat and horizontal
Installation location: dry, well ventilated and frost-proof

Motor data

Wilo-SiBoost Smart 1...	Nominal motor power	Nominal current 3~400 V, 50 Hz	Motor efficiency		
	P_2	I_N	$\eta_{m\ 50\%}$	$\eta_{m\ 75\%}$	$\eta_{m\ 100\%}$
	kW	A	%		
Helix VE 608	3	9	84.2	87.5	87.5

Motor efficiency based on 400 V, 50 Hz

Dimensions, weights

Wilo-SiBoost Smart 1...	Nominal diameters of the pipe connections on suction side	Nominal diameters of pipe connections on the pressure side	Dimensions									Weight approx.
	RPS	*RPD*	*H*	*H1*	*H3*	*HP*	*L*	*L3*	*P*	*P1*	*P3*	*m*
			mm									kg
Helix VE 608	Rp 1¼	R 1¼	1038	140	90	1038	600	160	340	470	300	88

Technical data Wilo-SiBoost Smart 1 Helix VE

Pump curves

Wilo-SiBoost Smart 1 Helix VE 611

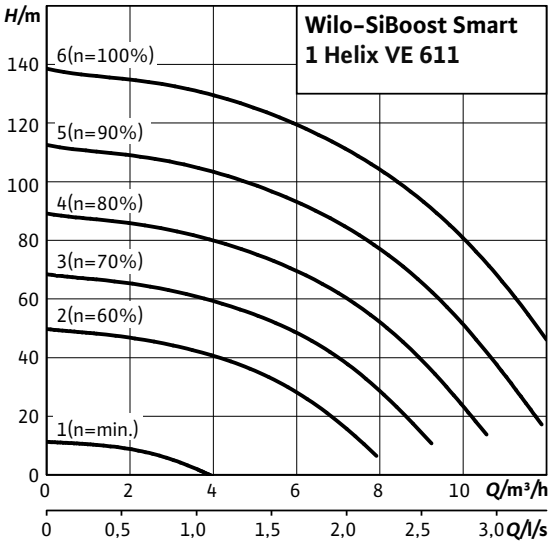

Dimension drawing

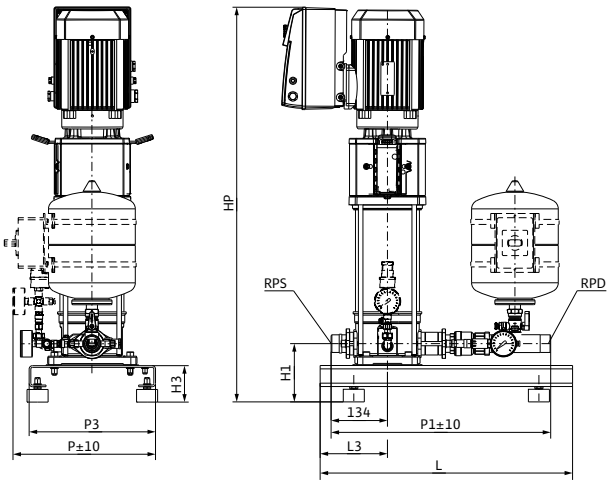

Sample systems are shown.
Accessories (to be ordered separately): Optional WMS low-water cut-out switchgear kit, main switch
Installation surface: flat and horizontal
Installation location: dry, well ventilated and frost-proof

Motor data

Wilo-SiBoost Smart 1...	Nominal motor power	Nominal current 3~400 V, 50 Hz	Motor efficiency		
	P_2	I_N	$\eta_{m\,50\%}$	$\eta_{m\,75\%}$	$\eta_{m\,100\%}$
	kW	A	%		
Helix VE 611	4	9.7	84.5	87.1	87.5

Motor efficiency based on 400 V, 50 Hz

Dimensions, weights

Wilo-SiBoost Smart 1...	Nominal diameters of the pipe connections on suction side	Nominal diameters of pipe connections on the pressure side	Dimensions									Weight approx.
	RPS	*RPD*	*H*	*H1*	*H3*	*HP*	*L*	*L3*	*P*	*P1*	*P3*	*m*
			mm									kg
Helix VE 611	Rp 1¼	R 1¼	1215	140	90	1215	600	160	340	470	300	91

Pressure boosting

Single pump systems, speed-controlled

Technical data Wilo-SiBoost Smart 1 Helix VE

Pump curves

Wilo-SiBoost Smart 1 Helix VE 1002

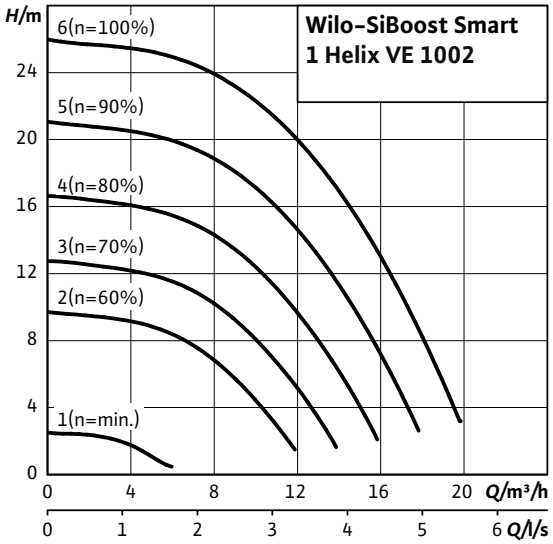

Dimension drawing

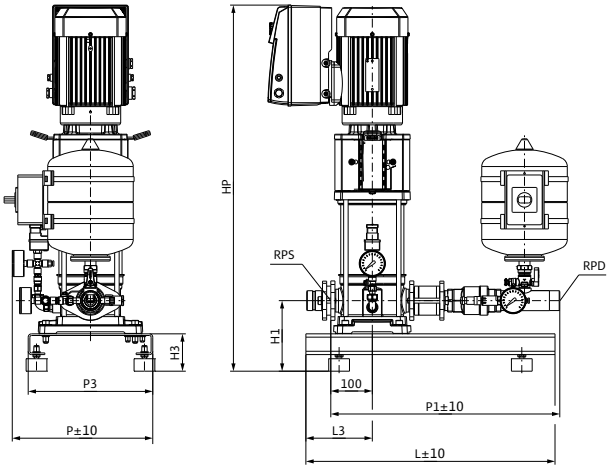

Sample systems are shown.
Accessories (to be ordered separately): Optional WMS low-water cut-out switchgear kit, main switch
Installation surface: flat and horizontal
Installation location: dry, well ventilated and frost-proof

Motor data

Wilo-SiBoost Smart 1...	Nominal motor power	Nominal current 3~400 V, 50 Hz	Motor efficiency		
	P_2	I_N	$\eta_{m\ 50\%}$	$\eta_{m\ 75\%}$	$\eta_{m\ 100\%}$
	kW	A	%		
Helix VE 1002	1.1	3.2	79.0	82.0	82.5

Motor efficiency based on 400 V, 50 Hz

Dimensions, weights

Wilo-SiBoost Smart 1...	Nominal diameters of the pipe connections on suction side	Nominal diameters of pipe connections on the pressure side	Dimensions									Weight approx.
	RPS	*RPD*	*H*	*H1*	*H3*	*HP*	*L*	*L3*	*P*	*P1*	*P3*	*m*
			mm									kg
Helix VE 1002	Rp 1½	R 1½	747	170	90	747	600	160	340	556	300	58

Technical data Wilo-SiBoost Smart 1 Helix VE

Pump curves

Wilo-SiBoost Smart 1 Helix VE 1003

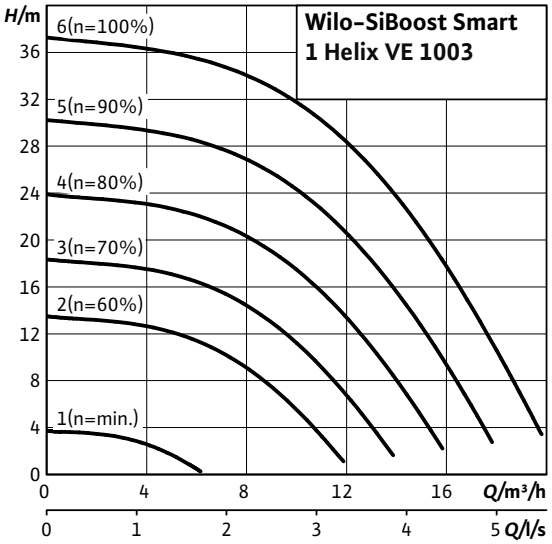

Dimension drawing

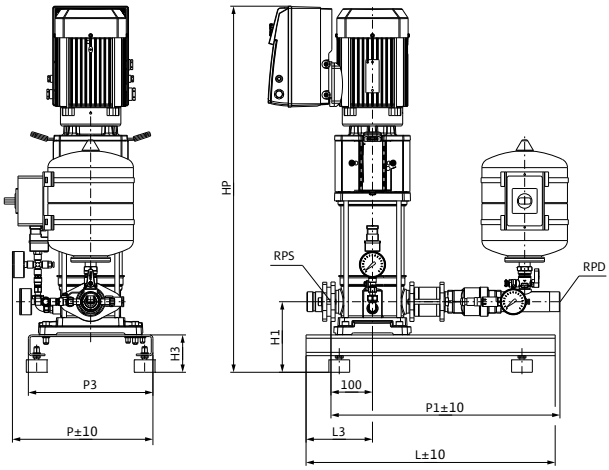

Sample systems are shown.
Accessories (to be ordered separately): Optional WMS low-water cut-out switchgear kit, main switch
Installation surface: flat and horizontal
Installation location: dry, well ventilated and frost-proof

Motor data

Wilo-SiBoost Smart 1...	Nominal motor power	Nominal current 3~400 V, 50 Hz	Motor efficiency		
	P_2	I_N	$\eta_{m\,50\%}$	$\eta_{m\,75\%}$	$\eta_{m\,100\%}$
	kW	A	%		
Helix VE 1003	1.5	5.6	79.0	82.0	84.0

Motor efficiency based on 400 V, 50 Hz

Dimensions, weights

Wilo-SiBoost Smart 1...	Nominal diameters of the pipe connections on suction side	Nominal diameters of pipe connections on the pressure side	Dimensions									Weight approx.
	RPS	*RPD*	*H*	*H1*	*H3*	*HP*	*L*	*L3*	*P*	*P1*	*P3*	*m*
			mm									kg
Helix VE 1003	Rp 1½	R 1½	834	170	90	834	600	160	340	556	300	67

Pressure boosting

Single pump systems, speed-controlled

Technical data Wilo-SiBoost Smart 1 Helix VE

Pump curves

Wilo-SiBoost Smart 1 Helix VE 1004

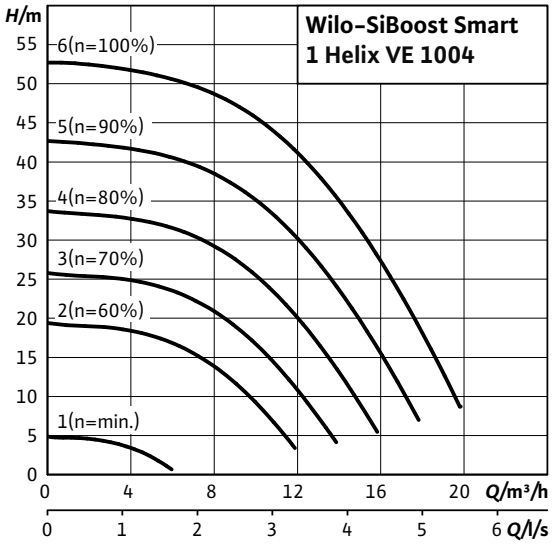

Dimension drawing

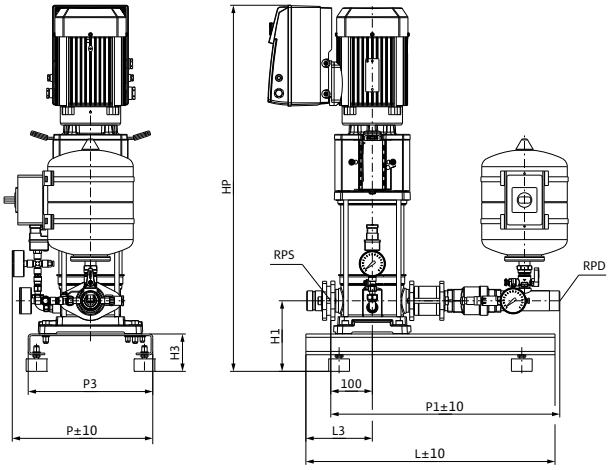

Sample systems are shown.
Accessories (to be ordered separately): Optional WMS low-water cut-out switchgear kit, main switch
Installation surface: flat and horizontal
Installation location: dry, well ventilated and frost-proof

Motor data

Wilo-SiBoost Smart 1...	Nominal motor power	Nominal current 3~400 V, 50 Hz	Motor efficiency		
	P_2	I_N	$\eta_{m\ 50\%}$	$\eta_{m\ 75\%}$	$\eta_{m\ 100\%}$
	kW	A	%		
Helix VE 1004	2.2	5.6	81.0	84.0	85.5

Motor efficiency based on 400 V, 50 Hz

Dimensions, weights

Wilo-SiBoost Smart 1...	Nominal diameters of the pipe connections on suction side	Nominal diameters of pipe connections on the pressure side	Dimensions									Weight approx.
	RPS	*RPD*	*H*	*H1*	*H3*	*HP*	*L*	*L3*	*P*	*P1*	*P3*	*m*
			mm									kg
Helix VE 1004	Rp 1½	R 1½	876	170	90	846	600	160	340	556	300	68

Technical data Wilo-SiBoost Smart 1 Helix VE

Pump curves

Wilo-SiBoost Smart 1 Helix VE 1005

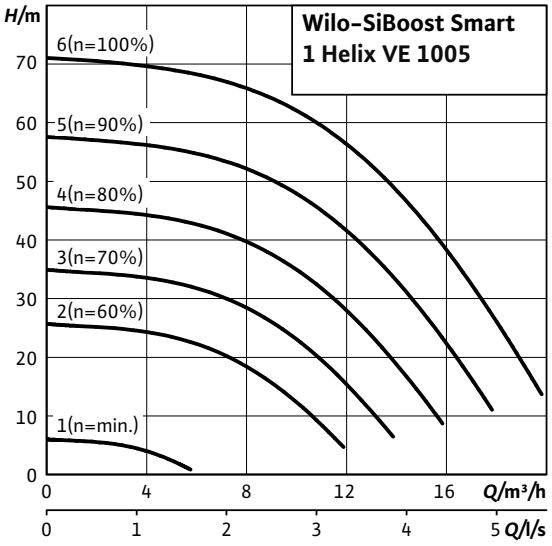

Dimension drawing

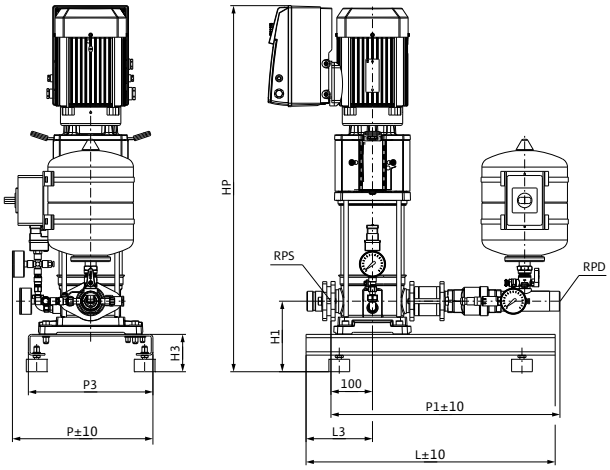

Sample systems are shown.
Accessories (to be ordered separately): Optional WMS low-water cut-out switchgear kit, main switch
Installation surface: flat and horizontal
Installation location: dry, well ventilated and frost-proof

Motor data

Wilo-SiBoost Smart 1...	Nominal motor power	Nominal current 3~400 V, 50 Hz	Motor efficiency		
	P_2	I_N	$\eta_{m\,50\%}$	$\eta_{m\,75\%}$	$\eta_{m\,100\%}$
	kW	A	%		
Helix VE 1005	3	9	84.2	87.5	87.5

Motor efficiency based on 400 V, 50 Hz

Dimensions, weights

Wilo-SiBoost Smart 1...	Nominal diameters of the pipe connections on suction side	Nominal diameters of pipe connections on the pressure side	Dimensions									Weight approx.
	RPS	*RPD*	*H*	*H1*	*H3*	*HP*	*L*	*L3*	*P*	*P1*	*P3*	*m*
			mm									kg
Helix VE 1005	Rp 1½	R 1½	957	170	90	957	600	160	340	556	300	90

Pressure boosting

Single pump systems, speed-controlled

Technical data Wilo-SiBoost Smart 1 Helix VE

Pump curves

Wilo-SiBoost Smart 1 Helix VE 1006

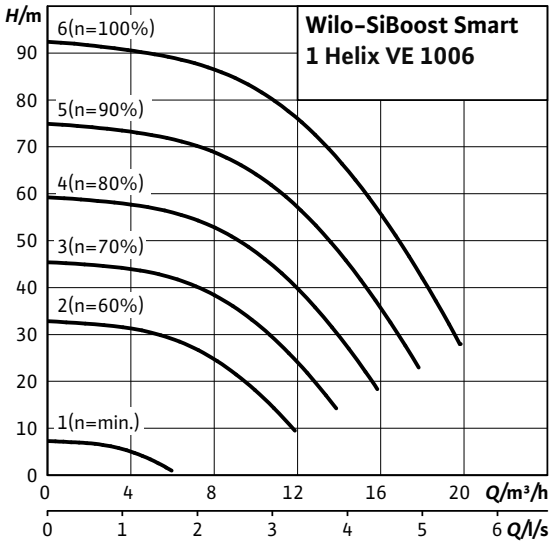

Dimension drawing

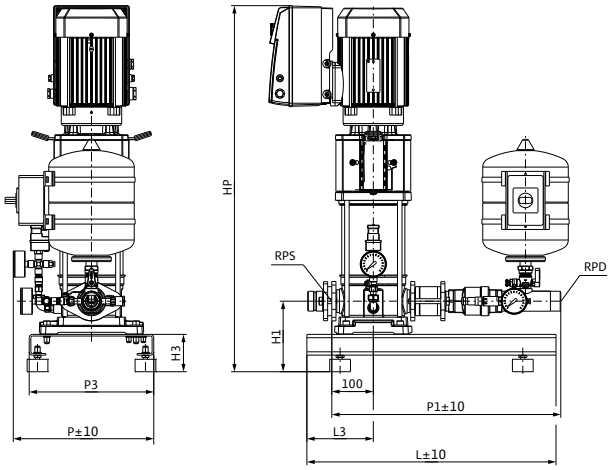

Sample systems are shown.
Accessories (to be ordered separately): Optional WMS low-water cut-out switchgear kit, main switch
Installation surface: flat and horizontal
Installation location: dry, well ventilated and frost-proof

Motor data

Wilo-SiBoost Smart 1...	Nominal motor power	Nominal current 3~400 V, 50 Hz	Motor efficiency		
	P_2	I_N	$\eta_{m\ 50\%}$	$\eta_{m\ 75\%}$	$\eta_{m\ 100\%}$
	kW	A	%		
Helix VE 1006	4	9.7	84.5	87.1	87.5

Motor efficiency based on 400 V, 50 Hz

Dimensions, weights

Wilo-SiBoost Smart 1...	Nominal diameters of the pipe connections on suction side	Nominal diameters of pipe connections on the pressure side	Dimensions									Weight approx.
	RPS	*RPD*	*H*	*H1*	*H3*	*HP*	*L*	*L3*	*P*	*P1*	*P3*	*m*
			mm									kg
Helix VE 1006	Rp 1½	R 1½	1011	170	90	1011	600	160	340	556	300	91

Technical data Wilo-SiBoost Smart 1 Helix VE

Pump curves

Wilo-SiBoost Smart 1 Helix VE 1009

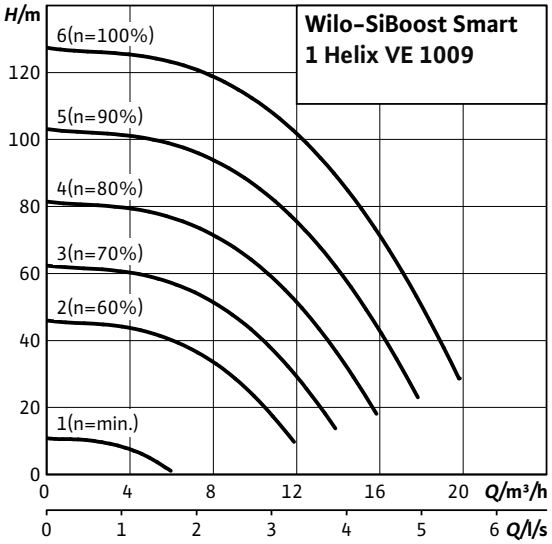

Dimension drawing

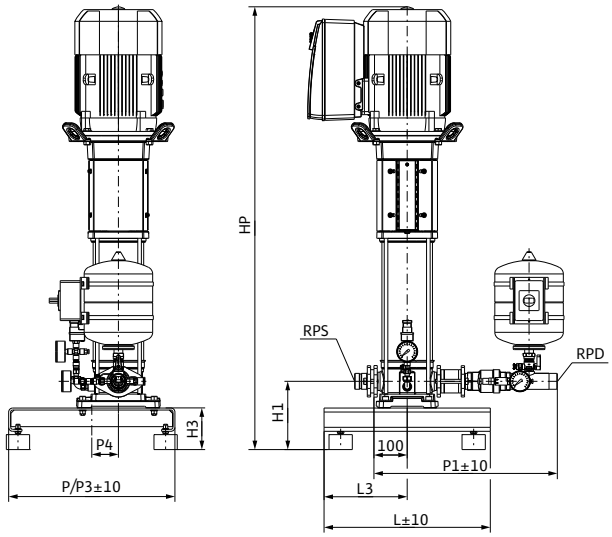

Sample systems are shown.
Accessories (to be ordered separately): Optional WMS low-water cut-out switchgear kit
Installation surface: flat and horizontal
Installation site: dry, well ventilated and frost-resistant

Motor data

Wilo-SiBoost Smart 1...	Nominal motor power	Nominal current 3~400 V, 50 Hz	Motor efficiency		
	P_2	I_N	$\eta_{m\,50\%}$	$\eta_{m\,75\%}$	$\eta_{m\,100\%}$
	kW	A	%		
Helix VE 1009	5.5	11	87.4	88.5	88.5

Motor efficiency based on 400 V, 50 Hz

Dimensions, weights

Wilo-SiBoost Smart 1...	Nominal diameters of the pipe connections on suction side	Nominal diameters of pipe connections on the pressure side	Dimensions									Weight approx.
	RPS	*RPD*	*H*	*H1*	*H3*	*HP*	*L*	*L3*	*P*	*P1*	*P3*	*m*
			mm									kg
Helix VE 1009	Rp 1½	R 1½	1331	205	125	1331	500	250	500	556	500	131

Technical data Wilo-SiBoost Smart 1 Helix VE

Pump curves

Wilo-SiBoost Smart 1 Helix VE 1602

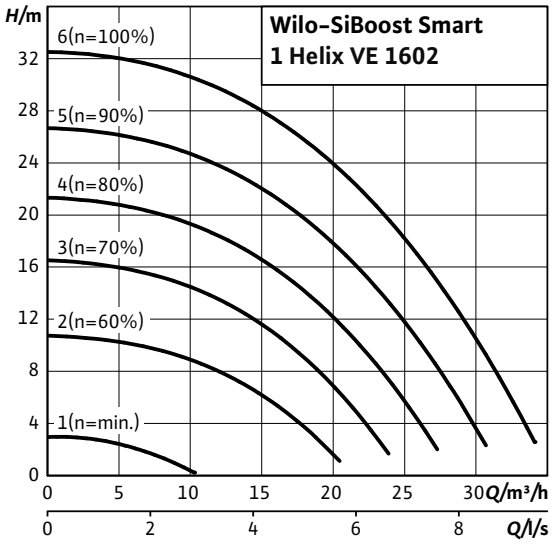

Dimension drawing

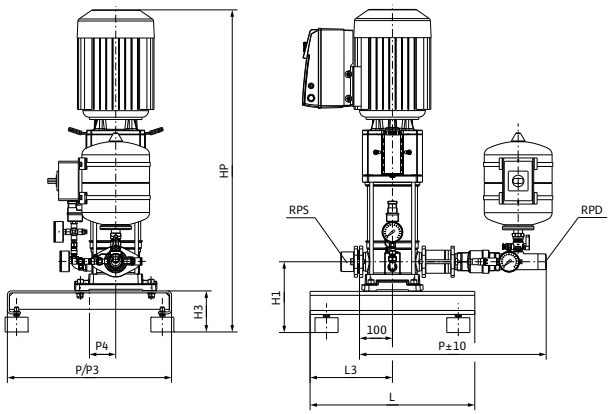

Sample systems are shown.
Accessories (to be ordered separately): Optional WMS low-water cut-out switchgear kit
Installation surface: flat and horizontal
Installation site: dry, well ventilated and frost-resistant

Motor data

Wilo-SiBoost Smart 1...	Nominal motor power	Nominal current 3~400 V, 50 Hz	Motor efficiency		
	P_2	I_N	$\eta_{m\ 50\%}$	$\eta_{m\ 75\%}$	$\eta_{m\ 100\%}$
	kW	A	%		
Helix VE 1602	2.2	5.6	81.0	84.0	85.5

Motor efficiency based on 400 V, 50 Hz

Dimensions, weights

Wilo-SiBoost Smart 1...	Nominal diameters of the pipe connections on suction side	Nominal diameters of pipe connections on the pressure side	Dimensions									Weight approx.
	RPS	*RPD*	*H*	*H1*	*H3*	*HP*	*L*	*L3*	*P*	*P1*	*P3*	*m*
			mm									kg
Helix VE 1602	Rp 2	R 1½	871	215	125	871	500	250	500	567	500	75

Technical data Wilo-SiBoost Smart 1 Helix VE

Pump curves

Wilo-SiBoost Smart 1 Helix VE 1603-3kW

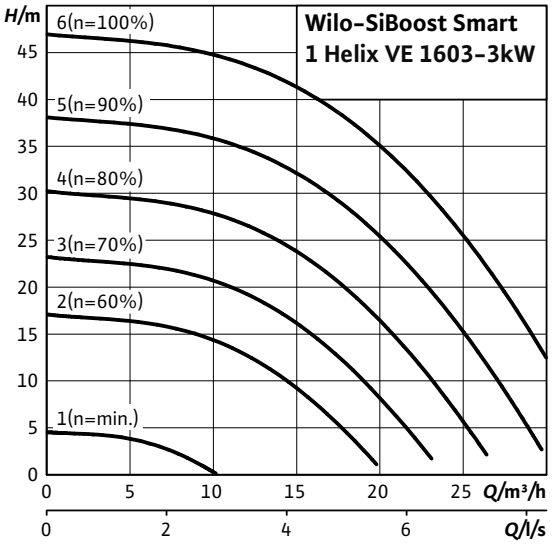

Dimension drawing

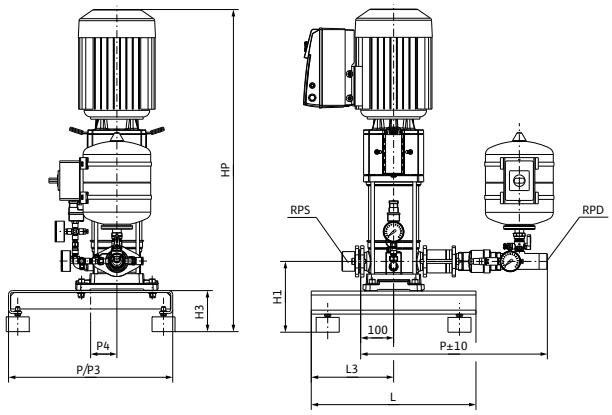

Sample systems are shown.
Accessories (to be ordered separately): Optional WMS low-water cut-out switchgear kit
Installation surface: flat and horizontal
Installation site: dry, well ventilated and frost-resistant

Motor data

Wilo-SiBoost Smart 1...	Nominal motor power	Nominal current 3~400 V, 50 Hz	Motor efficiency		
	P_2	I_N	$\eta_{m\,50\%}$	$\eta_{m\,75\%}$	$\eta_{m\,100\%}$
	kW	A	%		
Helix VE 1603/3kW	3	9	84.2	87.5	87.5

Motor efficiency based on 400 V, 50 Hz

Dimensions, weights

Wilo-SiBoost Smart 1...	Nominal diameters of the pipe connections on suction side	Nominal diameters of pipe connections on the pressure side	Dimensions									Weight approx.
	RPS	*RPD*	*H*	*H1*	*H3*	*HP*	*L*	*L3*	*P*	*P1*	*P3*	*m*
			mm									kg
Helix VE 1603/3kW	Rp 2	R 1½	946	215	125	946	500	250	500	567	500	99

Technical data Wilo-SiBoost Smart 1 Helix VE

Pump curves

Wilo-SiBoost Smart 1 Helix VE 1603

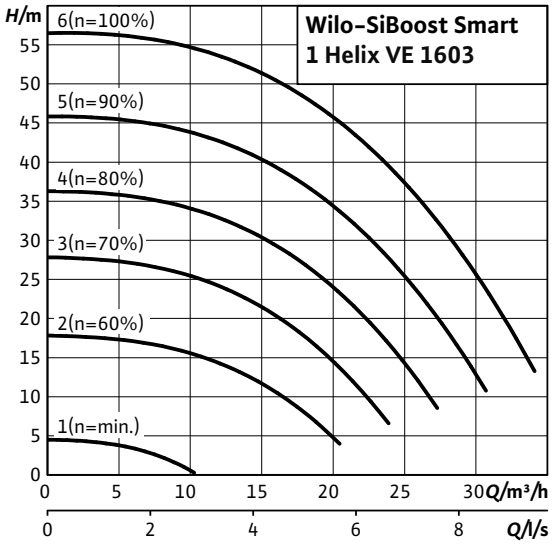

Dimension drawing

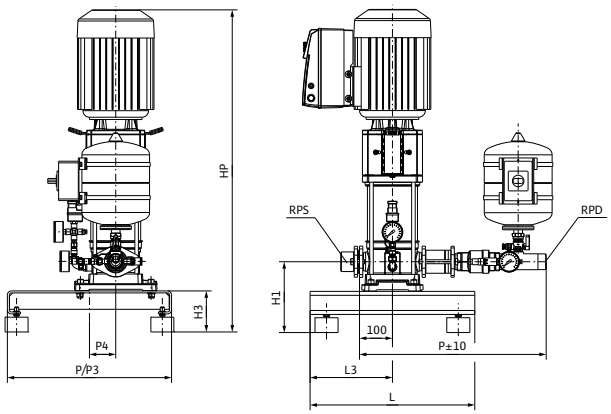

Sample systems are shown.
Accessories (to be ordered separately): Optional WMS low-water cut-out switchgear kit
Installation surface: flat and horizontal
Installation site: dry, well ventilated and frost-resistant

Motor data

Wilo-SiBoost Smart 1...	Nominal motor power	Nominal current 3~400 V, 50 Hz	Motor efficiency		
	P_2	I_N	$\eta_{m\ 50\%}$	$\eta_{m\ 75\%}$	$\eta_{m\ 100\%}$
	kW	A	%		
Helix VE 1603	4	9.7	84.5	87.1	87.5

Motor efficiency based on 400 V, 50 Hz

Dimensions, weights

Wilo-SiBoost Smart 1...	Nominal diameters of the pipe connections on suction side	Nominal diameters of pipe connections on the pressure side	Dimensions									Weight approx.
	RPS	*RPD*	*H*	*H1*	*H3*	*HP*	*L*	*L3*	*P*	*P1*	*P3*	*m*
			mm									kg
Helix VE 1603	Rp 2	R 1½	981	215	125	981	500	250	500	567	500	100

Technical data Wilo-SiBoost Smart 1 Helix VE

Pump curves

Wilo-SiBoost Smart 1 Helix VE 1605

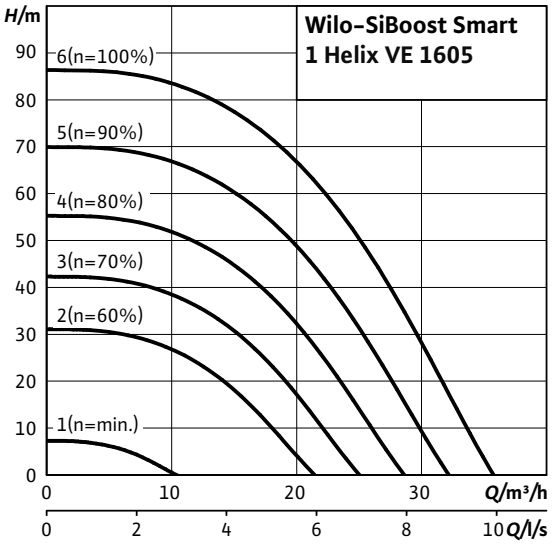

Dimension drawing

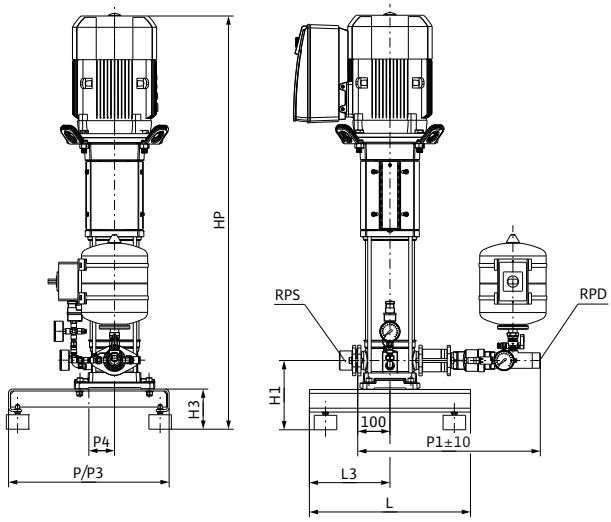

Sample systems are shown.
Accessories (to be ordered separately): Optional WMS low-water cut-out switchgear kit, main switch
Installation surface: flat and horizontal
Installation location: dry, well ventilated and frost-proof

Motor data

Wilo-SiBoost Smart 1...	Nominal motor power	Nominal current 3~400 V, 50 Hz	Motor efficiency		
	P_2	I_N	$\eta_{m\,50\%}$	$\eta_{m\,75\%}$	$\eta_{m\,100\%}$
	kW	A	%		
Helix VE 1605	5.5	11	87.4	88.5	88.5

Motor efficiency based on 400 V, 50 Hz

Dimensions, weights

Wilo-SiBoost Smart 1...	Nominal diameters of the pipe connections on suction side	Nominal diameters of pipe connections on the pressure side	Dimensions									Weight approx.
	RPS	*RPD*	*H*	*H1*	*H3*	*HP*	*L*	*L3*	*P*	*P1*	*P3*	*m*
			mm									kg
Helix VE 1605	Rp 2	R 1½	1244	215	125	1244	500	250	500	567	500	127

Pressure boosting

Single pump systems, speed-controlled

Technical data Wilo-SiBoost Smart 1 Helix VE

Pump curves

Wilo-SiBoost Smart 1 Helix VE 1606

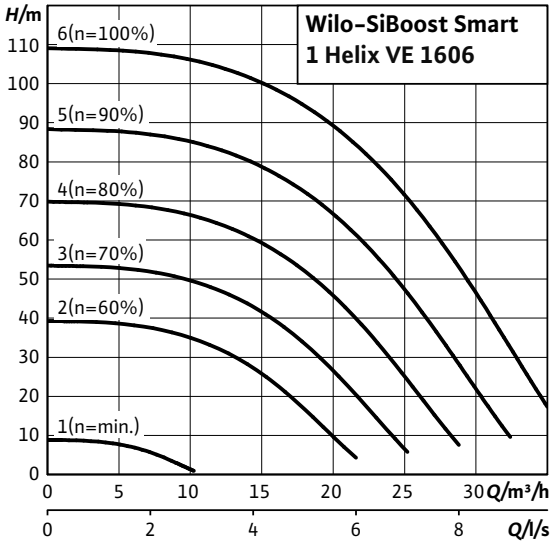

Dimension drawing

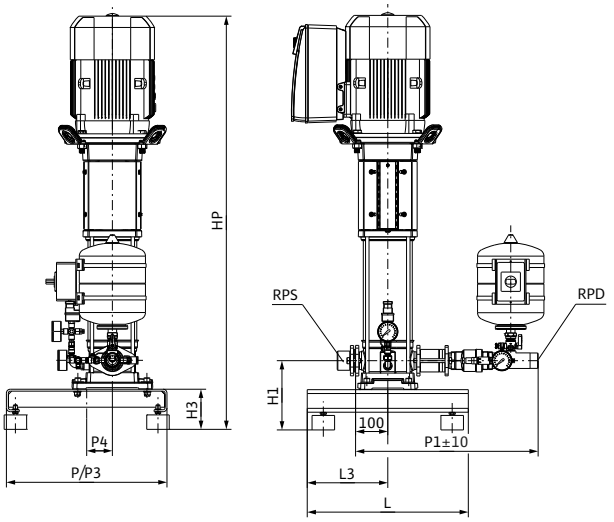

Sample systems are shown.
Accessories (to be ordered separately): Optional WMS low-water cut-out switchgear kit, main switch
Installation surface: flat and horizontal
Installation location: dry, well ventilated and frost-proof

Motor data

Wilo-SiBoost Smart 1...	Nominal motor power	Nominal current 3~400 V, 50 Hz	Motor efficiency		
	P_2	I_N	$\eta_{m\ 50\%}$	$\eta_{m\ 75\%}$	$\eta_{m\ 100\%}$
	kW	A	%		
Helix VE 1606	7.5	14.3	88.4	89.5	89.5

Motor efficiency based on 400 V, 50 Hz

Dimensions, weights

Wilo-SiBoost Smart 1...	Nominal diameters of the pipe connections on suction side	Nominal diameters of pipe connections on the pressure side	Dimensions									Weight approx.
	RPS	*RPD*	*H*	*H1*	*H3*	*HP*	*L*	*L3*	*P*	*P1*	*P3*	*m*
			mm									kg
Helix VE 1606	Rp 2	R 1½	1294	215	125	1294	500	250	500	567	500	132

Series description Wilo-Comfort-Vario COR-1 Helix VE...-GE

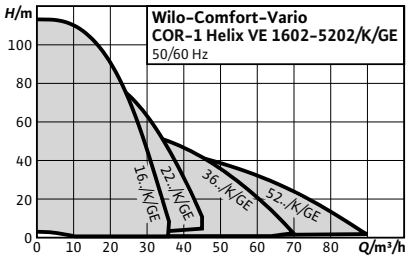

Design
Highly efficient connection-ready water-supply unit with vertically-mounted stainless steel high-pressure multistage centrifugal pump in glanded version, with integrated frequency converter.

Type key

Example:	**Wilo-COR-1 Helix VE3602/K-5.5-GE**
COR	Compact pressure boosting system with integrated speed control
1	Number of pumps
Helix VE	Pump series
36	Rated volume flow [m^3/h]
02	Number of pump stages
K	With cartridge mechanical seal
5,5	Rated motor power P_2 in kW [only included if more than one motor is available for types with the same hydraulic output]
GE	GE = basic unit

Application
- Fully automatic water supply in inlet mode, either from the public water supply network or from a tank.
- Pumping of potable water, process water, cooling water, fire water (apart from fire-extinguishing systems in accordance with DIN14462) or other water mixtures that do not attack the materials used chemically or mechanically and do not contain abrasive or long-fibre constituents

Special features/product advantages
- Sturdy system with to Helix VE series stainless-steel high-pressure multistage centrifugal pumps with air-cooled integrated frequency converter
- Highly efficient pump hydraulics in combination with IE2-equivalent standard motors
- Wide hydraulic range through the use of all pumps in the Helix VE series
- Superproportionally large frequency converter control range from 25 up to max. 60 Hz (depending on the version)
- Built-in full motor protection with PTC thermistor sensors
- Integrated dry-running detection with automatic deactivation in the event of low water via performance characteristics of the motor control electronics

Technical data
- Mains connection 3~400 V ± 10%, 50 Hz; 3~380/440 V ±10%, 60 Hz
- Fluid temperature max. 50°C (70°C optional)
- Ambient temperature max. 40°C
- Operating pressure 16 bar
- Inlet pressure 10 bar
- Nominal connection diameters on intake side Rp 2" - DN 80
- Nominal connection diameters on discharge side R 1½ - DN 80
- Speed range 1160-3500 rpm
- Protection class: IP 54
- Fuse on mains side AC 3 according motor power and EVU regulations
- Approved fluids (other fluids on request):
  - Pure water without settling sediment
  - Process water, cold water, cooling water and rainwater
  - Potable water
- Note on fluids: Approved fluids are generally water mixtures which do not chemically or mechanically attack the materials used and do not contain either abrasive or fibrous matter

Equipment/function
- 1 pump of the Helix VE series with IE2-equivalent standard motor (up to 7.5 kW) and infinitely variable auto control with integrated frequency converter
- Base frame made of galvanised steel, with height-adjustable vibration absorbers for insulation against structure-borne noise
- All parts that come in contact with the fluid are corrosion-resistant
- Check valve, pressure side
- Non-return valve, pressure side
- Diaphragm pressure vessel 8 l, PN16
- Pressure gauge, pressure side
- Optional low-water cut-out switchgear with pressure gauge, suction side

Materials
Helix VE 16
- Impellers, diffusors, stage housing made of stainless steel 1.4307
- Pump housing made of stainless steel 1.4301
- Shaft made of stainless steel 1.4057
- 1.4404 shaft protection sleeve
- O-ring gaskets made of EPDM (FKM gasket on request)
- Pipework made of stainless steel 1.4571

Helix VE 22 to Helix VE 52
- Impellers, diffusors, stage housing made of stainless steel 1.4307
- Pump housing made of cataphoretically coated EN-GJL 250 cast iron

Series description Wilo-Comfort-Vario COR-1 Helix VE...-GE

- Shaft made of stainless steel 1.4057
- 1.4404 shaft protection sleeve
- O-ring gasket made of EPDM (FKM gasket on request)
- Pipework made of stainless steel 1.4571

Description/design

- Base frame: galvanised steel, with height-adjustable vibration absorbers for comprehensive insulation against structure-borne noise
- Pipework: complete pipework made of stainless steel, suitable for the connection of all piping materials used; the pipework is dimensioned according to the overall hydraulic performance of the pressure boosting system
- Pumps: 1 pump of the series Helix VE 16 to Helix VE 52; the adapted, air-cooled frequency converter on the pump motor enables continuous auto control between 25 Hz and a maximum of 60 Hz for all pumps of these series; all pump components in contact with fluid are made of stainless steel. KTW/WRAS/ACS approval for all parts that come in contact with the fluid
- Valves: the pump is fitted on the pressure side with a check valve with DVGW approval mark or a shut-off valve with DVGW approval mark and on the pressure side with a KTW-approved non-return valve
- Diaphragm pressure vessel: 8 l/PN16 arranged on the discharge side with a diaphragm made of butyl rubber, with DVGW/KTW approval, completely safe in accordance with food safety laws, for testing and inspection purposes, with a shut-off ball cock with drain and throughflow fitting with DVGW/KTW approval in accordance with DIN 4807
- Pressure sensor: 4 to 20 mA, arranged on the discharge side for controlling the frequency converter

Scope of delivery

- Factory-mounted, ready-to-connect pressure boosting system checked for proper functioning and impermeability
- Packaging
- Installation and operating instructions

Electrical connection

3~400 V

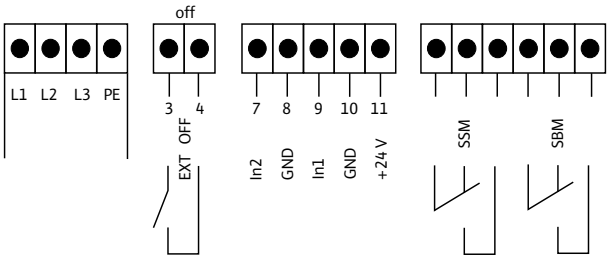

Optional main switch, optional pressure switch kit for low-water cut-out (switches pump via ext. I/O)

Electrical connection

3~400 V; 5.5-7.5 kW

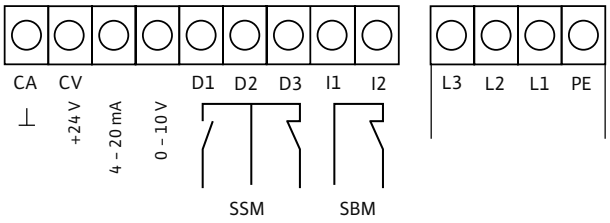

Technical data Wilo-Comfort-Vario COR-1 Helix VE...-GE

Pump curves

Wilo-Comfort-Vario COR -1 Helix VE 1602/K/GE

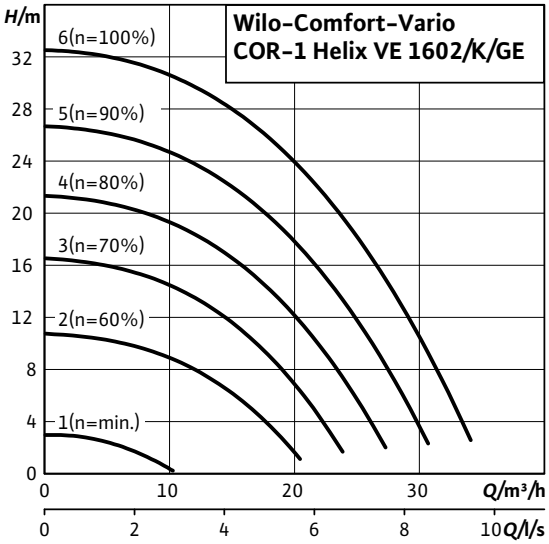

Dimension drawing

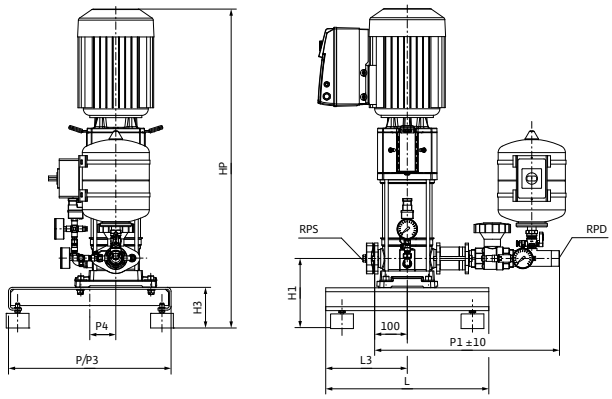

Sample systems are shown.
Accessories (to be ordered separately): Optional WMS low-water cut-out switchgear kit, main switch
Installation surface: flat and horizontal
Installation location: dry, well ventilated and frost-proof

Motor data

Wilo-Comfort-Vario COR-1...	Nominal motor power	Nominal current 3~400 V, 50 Hz	Motor efficiency		
	P_2	I_N	$\eta_{m\,50\%}$	$\eta_{m\,75\%}$	$\eta_{m\,100\%}$
	kW	A	%		
Helix VE 1602/K/GE	2.2	5.6	81.0	84.0	85.5

Motor efficiency based on 400 V, 50 Hz

Dimensions, weights

Wilo-Comfort-Vario COR-1...	Nominal diameters of the pipe connections on suction side	Nominal diameters of pipe connections on the pressure side	Dimensions									Weight approx.
	RPS	*RPD*	*H*	*H1*	*H3*	*HP*	*L*	*L3*	*P*	*P1*	*P3*	*m*
			mm									kg
Helix VE 1602/K/GE	Rp 2	R 1½	868	215	125	871	500	250	500	567	500	75

Pressure boosting

Single pump systems, speed-controlled

Technical data Wilo-Comfort-Vario COR-1 Helix VE...-GE

Pump curves

Wilo-Comfort-Vario COR -1 Helix VE 1603/K/GE

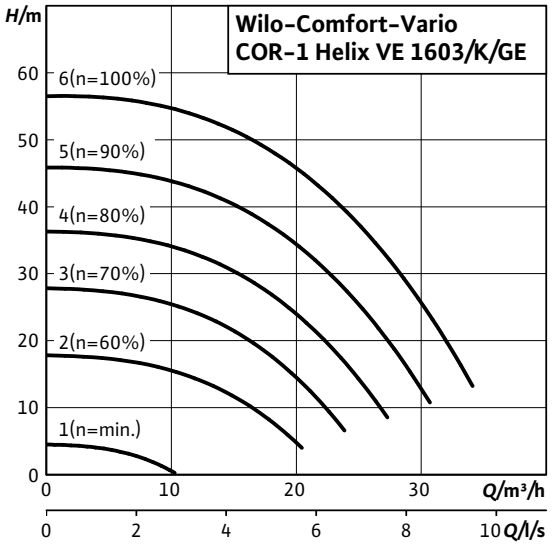

Dimension drawing

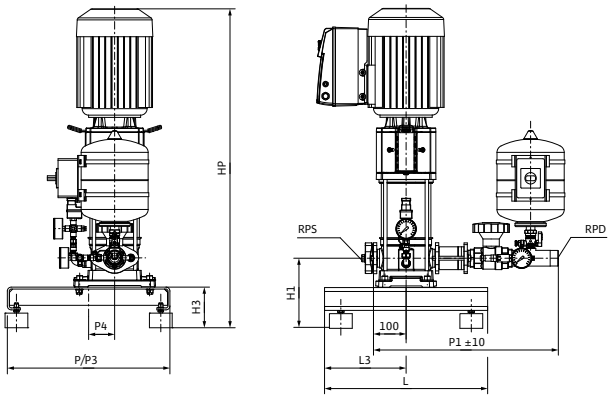

Sample systems are shown.
Accessories (to be ordered separately): Optional WMS low-water cut-out switchgear kit, main switch
Installation surface: flat and horizontal
Installation location: dry, well ventilated and frost-proof

Motor data

Wilo-Comfort-Vario COR-1...	Nominal motor power	Nominal current 3~400 V, 50 Hz	Motor efficiency		
	P_2	I_N	$\eta_{m\ 50\%}$	$\eta_{m\ 75\%}$	$\eta_{m\ 100\%}$
	kW	A	%		
Helix VE 1603/K/GE	4	9.7	84.5	87.1	87.5

Motor efficiency based on 400 V, 50 Hz

Dimensions, weights

Wilo-Comfort-Vario COR-1...	Nominal diameters of the pipe connections on suction side	Nominal diameters of pipe connections on the pressure side	Dimensions									Weight approx.
	RPS	*RPD*	*H*	*H1*	*H3*	*HP*	*L*	*L3*	*P*	*P1*	*P3*	*m*
			mm									kg
Helix VE 1603/K/GE	Rp 2	R 1½	978	215	125	981	500	250	500	567	500	86

Technical data Wilo-Comfort-Vario COR-1 Helix VE...-GE

Pump curves

Wilo-Comfort-Vario COR -1 Helix VE 1605/K/GE

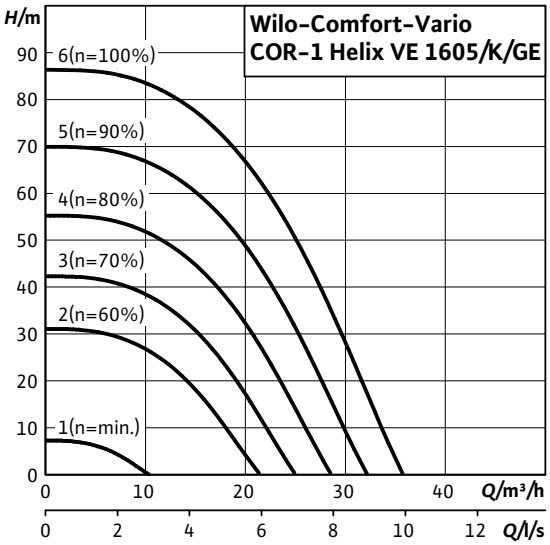

Dimension drawing

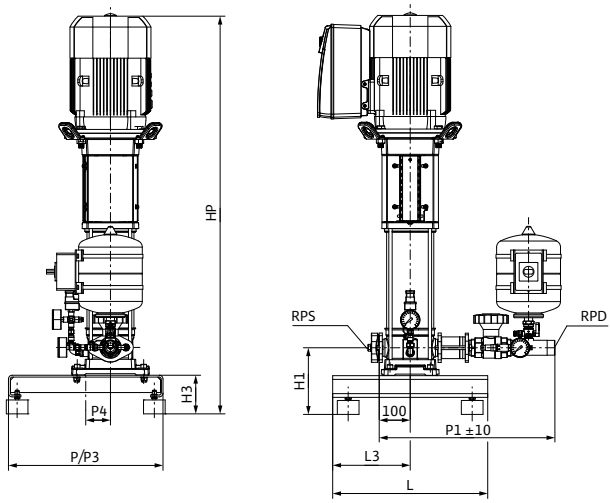

Sample systems are shown.
Accessories (to be ordered separately): Optional WMS low-water cut-out switchgear kit, main switch
Installation surface: flat and horizontal
Installation location: dry, well ventilated and frost-proof

Motor data

Wilo-Comfort-Vario COR-1...	Nominal motor power	Nominal current 3~400 V, 50 Hz	Motor efficiency		
	P_2	I_N	$\eta_{m\,50\%}$	$\eta_{m\,75\%}$	$\eta_{m\,100\%}$
	kW	A	%		
Helix VE 1605/K/GE	5.5	11	87.4	88.5	88.5

Motor efficiency based on 400 V, 50 Hz

Dimensions, weights

Wilo-Comfort-Vario COR-1...	Nominal diameters of the pipe connections on suction side	Nominal diameters of pipe connections on the pressure side	Dimensions									Weight approx.
	RPS	*RPD*	*H*	*H1*	*H3*	*HP*	*L*	*L3*	*P*	*P1*	*P3*	*m*
			mm									kg
Helix VE 1605/K/GE	Rp 2	R 1½	1241	215	125	1244	500	250	500	567	500	125

Pressure boosting

Single pump systems, speed-controlled

Technical data Wilo-Comfort-Vario COR-1 Helix VE...-GE

Pump curves

Wilo-Comfort-Vario COR -1 Helix VE 1606/K/GE

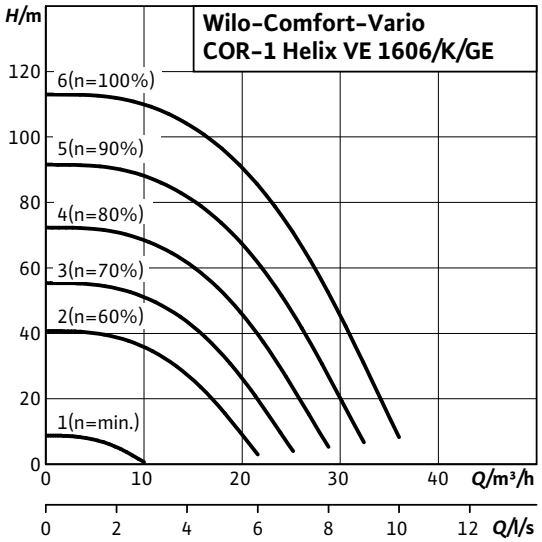

Dimension drawing

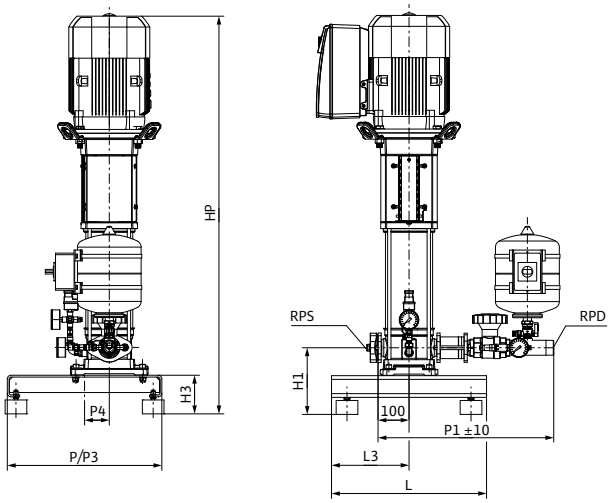

Sample systems are shown.
Accessories (to be ordered separately): Optional WMS low-water cut-out switchgear kit, main switch
Installation surface: flat and horizontal
Installation location: dry, well ventilated and frost-proof

Motor data

Wilo-Comfort-Vario COR-1...	Nominal motor power	Nominal current 3~400 V, 50 Hz	Motor efficiency		
	P_2	I_N	$\eta_{m\ 50\%}$	$\eta_{m\ 75\%}$	$\eta_{m\ 100\%}$
	kW	A	%		
Helix VE 1606/K/GE	7.5	14.3	88.4	89.5	89.5

Motor efficiency based on 400 V, 50 Hz

Dimensions, weights

Wilo-Comfort-Vario COR-1...	Nominal diameters of the pipe connections on suction side	Nominal diameters of pipe connections on the pressure side	Dimensions									Weight approx.
	RPS	*RPD*	*H*	*H1*	*H3*	*HP*	*L*	*L3*	*P*	*P1*	*P3*	*m*
			mm									kg
Helix VE 1606/K/GE	Rp 2	R 1½	1291	215	125	1294	500	250	500	567	500	130

Technical data Wilo-Comfort-Vario COR-1 Helix VE...-GE

Pump curves

Wilo-Comfort-Vario COR -1 Helix VE 2202/K/GE

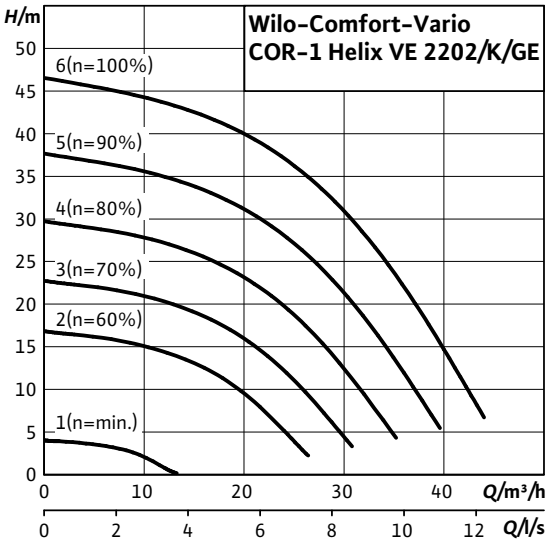

Dimension drawing

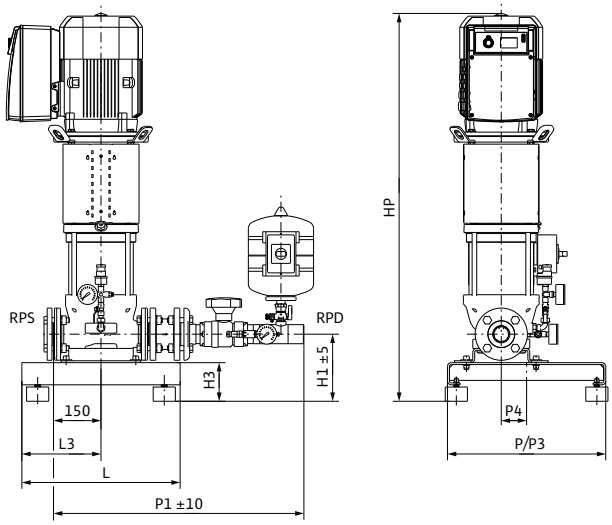

Sample systems are shown.
Accessories (to be ordered separately): Optional WMS low-water cut-out switchgear kit, main switch
Installation surface: flat and horizontal
Installation location: dry, well ventilated and frost-proof

Motor data

Wilo-Comfort-Vario COR-1...	Nominal motor power	Nominal current 3~400 V, 50 Hz	Motor efficiency		
	P_2	I_N	$\eta_{m\,50\%}$	$\eta_{m\,75\%}$	$\eta_{m\,100\%}$
	kW	A	%		
Helix VE 2202/K/GE	4	9.7	84.5	87.1	87.5

Motor efficiency based on 400 V, 50 Hz

Dimensions, weights

Wilo-Comfort-Vario COR-1...	Nominal diameters of the pipe connections on suction side	Nominal diameters of pipe connections on the pressure side	Dimensions									Weight approx.
	RPS	*RPD*	*H*	*H1*	*H3*	*HP*	*L*	*L3*	*P*	*P1*	*P3*	*m*
			mm									kg
Helix VE 2202/K/GE	Rp 2	R 2	1010	215	125	1010	500	250	500	795	500	109

Technical data Wilo-Comfort-Vario COR-1 Helix VE...-GE

Pump curves

Wilo-Comfort-Vario COR -1 Helix VE 2203/K/GE

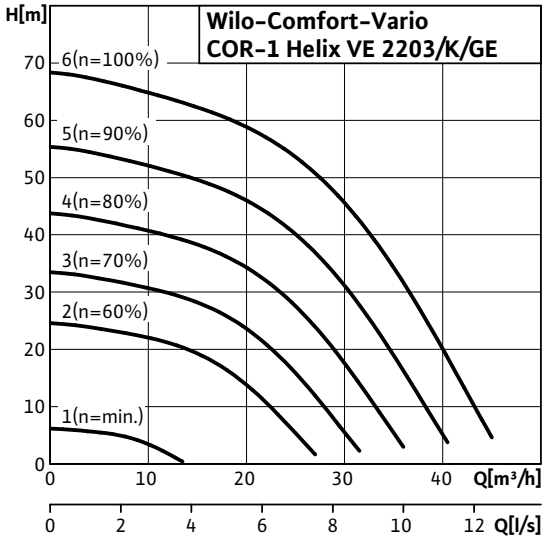

Dimension drawing

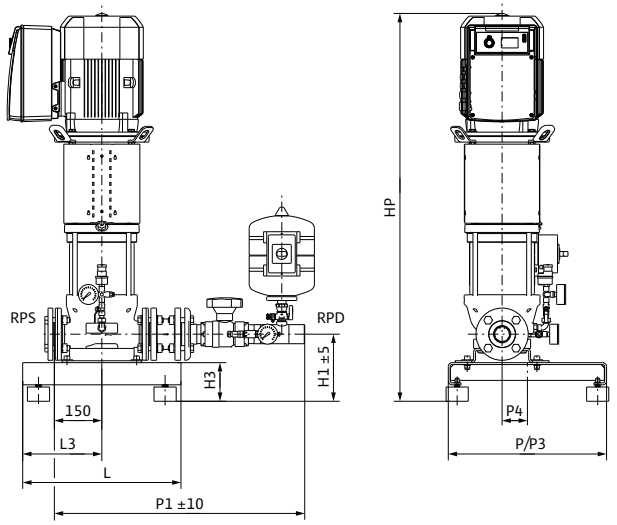

Sample systems are shown.
Accessories (to be ordered separately): Optional WMS low-water cut-out switchgear kit, main switch
Installation surface: flat and horizontal
Installation location: dry, well ventilated and frost-proof

Motor data

Wilo-Comfort-Vario COR-1...	Nominal motor power	Nominal current 3~400 V, 50 Hz	Motor efficiency		
	P_2	I_N	$\eta_{m\ 50\%}$	$\eta_{m\ 75\%}$	$\eta_{m\ 100\%}$
	kW	A	%		
Helix VE 2203/K/GE	5.5	11	87.4	88.5	88.5

Motor efficiency based on 400 V, 50 Hz

Dimensions, weights

Wilo-Comfort-Vario COR-1...	Nominal diameters of the pipe connections on suction side	Nominal diameters of pipe connections on the pressure side	Dimensions									Weight approx.
	RPS	*RPD*	*H*	*H1*	*H3*	*HP*	*L*	*L3*	*P*	*P1*	*P3*	*m*
			mm									kg
Helix VE 2203/K/GE	Rp 2	R 2	1229	215	125	1229	500	250	500	795	500	156

Technical data Wilo-Comfort-Vario COR-1 Helix VE...-GE

Pump curves

Wilo-Comfort-Vario COR -1 Helix VE 2204/K/GE

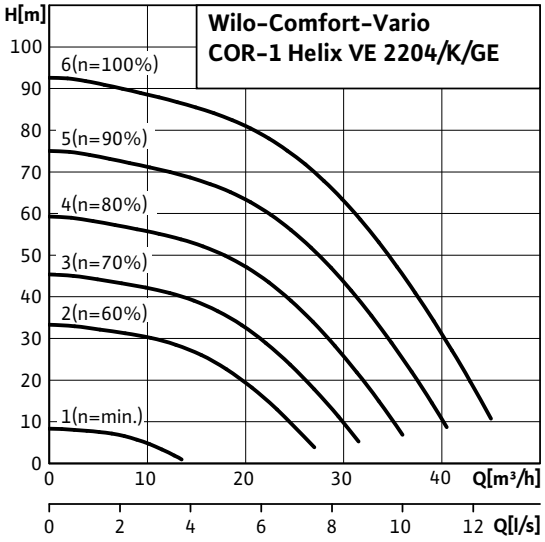

Dimension drawing

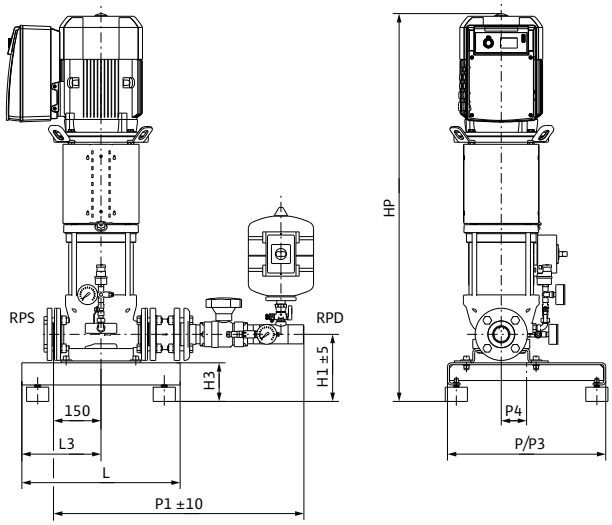

Sample systems are shown.
Accessories (to be ordered separately): Optional WMS low-water cut-out switchgear kit, main switch
Installation surface: flat and horizontal
Installation location: dry, well ventilated and frost-proof

Motor data

Wilo-Comfort-Vario COR-1...	Nominal motor power	Nominal current 3~400 V, 50 Hz	Motor efficiency		
	P_2	I_N	$\eta_{m\,50\%}$	$\eta_{m\,75\%}$	$\eta_{m\,100\%}$
	kW	A	%		
Helix VE 2204/K/GE	7.5	14.3	88.4	89.5	89.5

Motor efficiency based on 400 V, 50 Hz

Dimensions, weights

Wilo-Comfort-Vario COR-1...	Nominal diameters of the pipe connections on suction side	Nominal diameters of pipe connections on the pressure side	Dimensions									Weight approx.
	RPS	*RPD*	*H*	*H1*	*H3*	*HP*	*L*	*L3*	*P*	*P1*	*P3*	*m*
			mm									kg
Helix VE 2204/K/GE	Rp 2	R 2	1279	215	125	1279	500	250	500	795	500	157

Pressure boosting

Single pump systems, speed-controlled

Technical data Wilo-Comfort-Vario COR-1 Helix VE...-GE

Pump curves

Wilo-Comfort-Vario COR -1 Helix VE 3602/K-5,5/GE

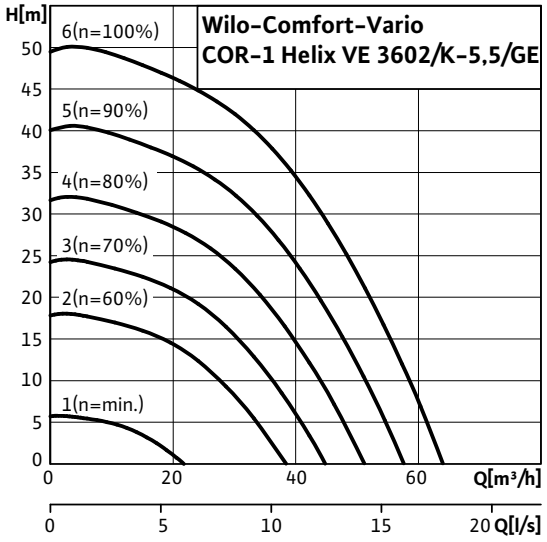

Dimension drawing

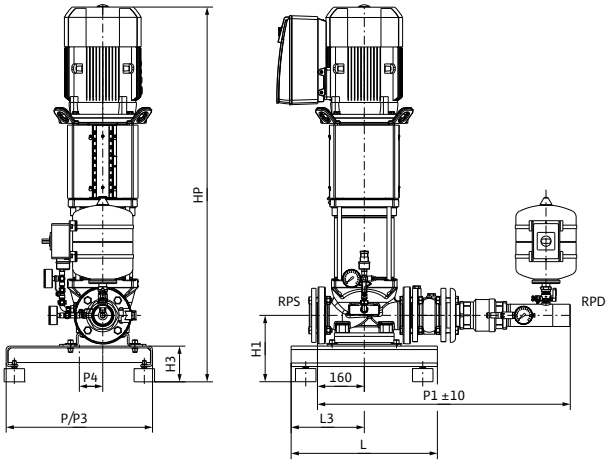

Sample systems are shown.
Accessories (to be ordered separately): Optional WMS low-water cut-out switchgear kit, main switch
Installation surface: flat and horizontal
Installation location: dry, well ventilated and frost-proof

Motor data

Wilo-Comfort-Vario COR-1...	Nominal motor power	Nominal current 3~400 V, 50 Hz	Motor efficiency		
	P_2	I_N	$\eta_{m\ 50\%}$	$\eta_{m\ 75\%}$	$\eta_{m\ 100\%}$
	kW	A	%		
Helix VE 3602/K-5.5/GE	5.5	11	87.4	88.5	88.5

Motor efficiency based on 400 V, 50 Hz

Dimensions, weights

Wilo-Comfort-Vario COR-1...	Nominal diameters of the pipe connections on suction side	Nominal diameters of pipe connections on the pressure side	Dimensions									Weight approx.
	RPS	*RPD*	*H*	*H1*	*H3*	*HP*	*L*	*L3*	*P*	*P1*	*P3*	*m*
			mm									kg
Helix VE 3602/K-5.5/GE	DN 65	R 2½	1217	227	122	1217	500	250	500	865	500	167

Technical data Wilo-Comfort-Vario COR-1 Helix VE...-GE

Pump curves

Wilo-Comfort-Vario COR -1 Helix VE 3602/K-7,5/GE

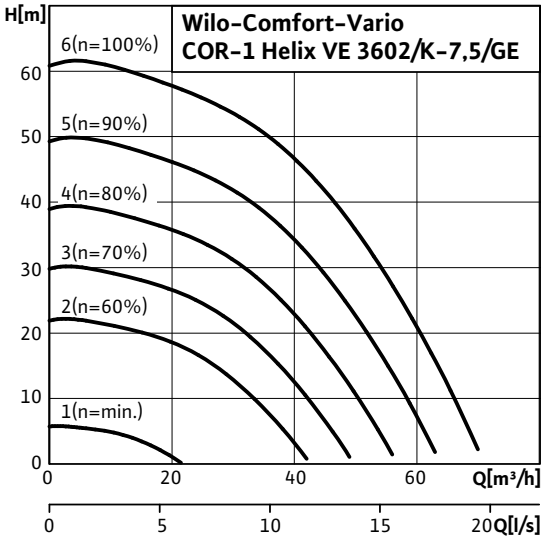

Dimension drawing

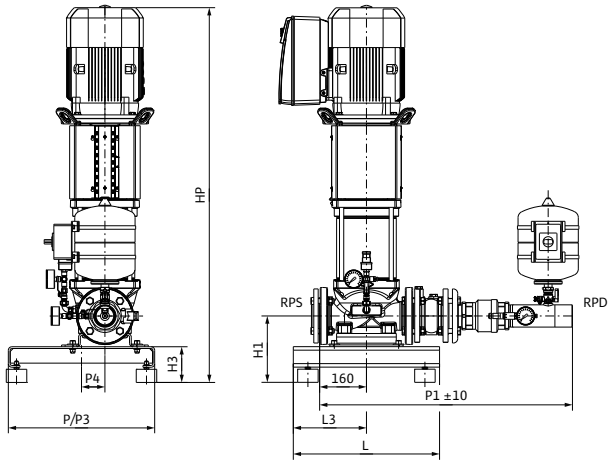

Sample systems are shown.
Accessories (to be ordered separately): Optional WMS low-water cut-out switchgear kit, main switch
Installation surface: flat and horizontal
Installation location: dry, well ventilated and frost-proof

Motor data

Wilo-Comfort-Vario COR-1...	Nominal motor power	Nominal current 3~400 V, 50 Hz	Motor efficiency		
	P_2	I_N	$\eta_{m\,50\%}$	$\eta_{m\,75\%}$	$\eta_{m\,100\%}$
	kW	A	%		
Helix VE 3602/K-7.5/GE	7.5	14.3	88.4	89.5	89.5

Motor efficiency based on 400 V, 50 Hz

Dimensions, weights

Wilo-Comfort-Vario COR-1...	Nominal diameters of the pipe connections on suction side	Nominal diameters of pipe connections on the pressure side	Dimensions									Weight approx.
	RPS	*RPD*	*H*	*H1*	*H3*	*HP*	*L*	*L3*	*P*	*P1*	*P3*	*m*
			mm									kg
Helix VE 3602/K-7.5/GE	DN 65	R 2½	1217	227	122	1217	500	250	500	865	500	171

Technical data Wilo-Comfort-Vario COR-1 Helix VE...-GE

Pump curves

Wilo-Comfort-Vario COR -1 Helix VE 5202/K/GE

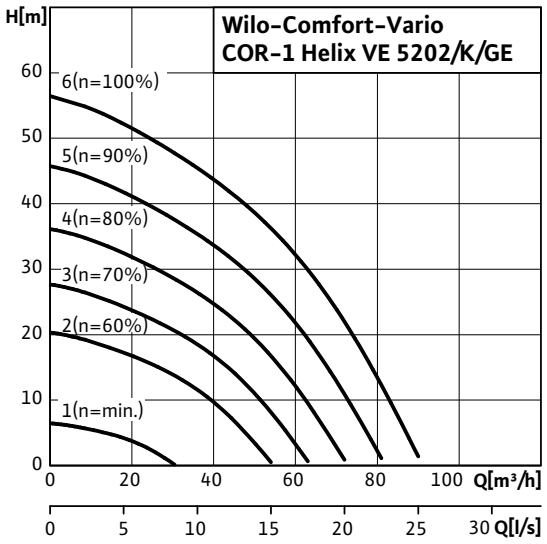

Dimension drawing

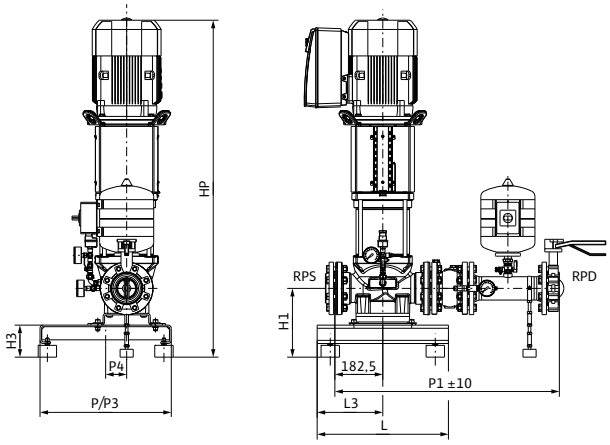

Sample systems are shown.
Accessories (to be ordered separately): Optional WMS low-water cut-out switchgear kit, main switch
Installation surface: flat and horizontal
Installation location: dry, well ventilated and frost-proof

Motor data

Wilo-Comfort-Vario COR-1...	Nominal motor power	Nominal current 3~400 V, 50 Hz	Motor efficiency		
	P_2	I_N	$\eta_{m\ 50\%}$	$\eta_{m\ 75\%}$	$\eta_{m\ 100\%}$
	kW	A	%		
Helix VE 5202/K/GE	7.5	14.3	88.4	89.5	89.5

Motor efficiency based on 400 V, 50 Hz

Dimensions, weights

Wilo-Comfort-Vario COR-1...	Nominal diameters of the pipe connections on suction side	Nominal diameters of pipe connections on the pressure side	Dimensions									Weight approx.
	RPS	*RPD*	*H*	*H1*	*H3*	*HP*	*L*	*L3*	*P*	*P1*	*P3*	*m*
			mm									kg
Helix VE 5202/K/GE	DN 80	DN 80	1285	262	122	1285	500	250	500	855	500	198

Series description Wilo-Comfort-Vario COR-1 Helix VE.../VR

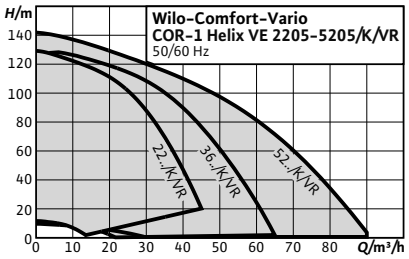

Design
Highly efficient, ready for connection water supply system with multistage, vertical stainless steel high-pressure multistage centrifugal pump in glanded version, with integrated frequency converter and VR Vario controller for motors from 7.5 kW.

Type key

Example:	**Wilo-COR-1 Helix VE3602/K-5,5-VR**
COR	Compact pressure boosting system with integrated speed control
1	Number of pumps
Helix VE	Pump series
36	Rated volume flow [m^3/h] of the single pump
02	Number of single-pump stages
K	With cartridge mechanical seal
5,5	Rated motor power P_2 in kW [only included if more than one motor is available for types with the same hydraulic output]
VR	Control device; VR = Vario controller

Application
- For fully automatic water supply in inlet mode, either from the public water supply system or from a tank.
- Pumping of potable water, process water, cooling water, fire water (apart from fire-extinguishing systems in accordance with DIN14462) or other water mixtures that do not attack the materials used chemically or mechanically and do not contain abrasive or long-fibre constituents

Special features/product advantages
- Sturdy system with to Helix VE series stainless-steel high-pressure multistage centrifugal pumps with air-cooled integrated frequency converter
- Highly efficient pump hydraulics in combination with IE2-equivalent standard motors
- Wide hydraulic range through the use of all pumps in the Helix VE series
- Superproportionally large frequency converter control range from 25 up to max. 60 Hz (depending on the version)
- Built-in full motor protection with PTC thermistor sensors
- Integrated dry-running detection with automatic deactivation in the event of low water via performance characteristics of the motor control electronics

Technical data
- Mains connection 3~400 V ± 10%, 50 Hz; 3~380/440 V ±10 %, 60 Hz
- Fluid temperature max. 50°C (70°C optional)
- Ambient temperature max. 40 °C
- Operating pressure 16 bar
- Inlet pressure 10 bar
- Nominal connection diameters on intake side Rp 2" - DN 80
- Nominal connection diameters on discharge side R 1½ - DN 80
- Speed range 1160-3500 rpm
- Protection class: IP 54
- Fuse on mains side AC 3 according motor power and EVU regulations
- Approved fluids (other fluids on request):
  - Pure water without settling sediment
  - Process water, cold water, cooling water and rainwater
  - Secondary hot water
- Note on fluids: Approved fluids are generally water mixtures which do not chemically or mechanically attack the materials used and do not contain either abrasive or fibrous matter

Equipment/function
- 1 pump of the Helix VE series with IE2-equivalent standard motor (up to 7.5 kW) and infinitely variable auto control with integrated frequency converter
- Automatic pump control via Comfort-Vario-Controller VR
- Base frame made of galvanised steel, with height-adjustable vibration absorbers for insulation against structure-borne noise
- All parts that come in contact with the fluid are corrosion-resistant
- Check valve, pressure side
- Non-return valve, pressure side
- Diaphragm pressure vessel 8 l, PN16
- Pressure gauge, pressure side
- Optional low-water cut-out switchgear with pressure gauge, suction side

Materials
Helix VE 22 to Helix VE 52
- Impellers, diffusors, stage housing made of stainless steel 1.4307
- Pump housing made of cataphoretically coated EN-GJL 250 cast iron
- Shaft made of stainless steel 1.4057
- 1.4404 shaft protection sleeve
- O-ring gasket made of EPDM (FKM gasket on request)
- Pipework made of stainless steel 1.4571

Series description Wilo-Comfort-Vario COR-1 Helix VE.../VR

Description/design

- Base frame: galvanised steel, with height-adjustable vibration absorbers for comprehensive insulation against structure-borne noise
- Pipework: complete pipework made of stainless steel, suitable for the connection of all piping materials used; the pipework is dimensioned according to the overall hydraulic performance of the pressure boosting system
- Pumps: 1 pump of the series Helix VE 22 to Helix VE 52; the adapted, air-cooled frequency converter on the pump motor enables continuous auto control between 25 Hz and a maximum of 60 Hz for all pumps of these series; all pump components in contact with fluid are made of stainless steel. KTW/WRAS/ACS approval for all parts that come in contact with the fluid
- Valves: the pump is fitted on the pressure side with a check valve with DVGW approval mark or a shut-off valve with DVGW approval mark and on the pressure side with a DVGW-approved non-return valve
- Diaphragm pressure vessel: 8 l/PN16 arranged on the discharge side with a diaphragm made of butyl rubber, with DVGW/KTW approval, completely safe in accordance with food safety laws, for testing and inspection purposes, with a shut-off ball cock with drain and throughflow fitting with DVGW/KTW approval in accordance with DIN 4807
- Pressure sensor: 4 to 20 mA, arranged on the discharge side for controlling the frequency converter

Scope of delivery

- Factory-mounted, connection-ready pressure boosting system checked for functionality and impermeability
- Packaging
- Installation and operating instructions

Electrical connection

3~400 V; 11-22 kW

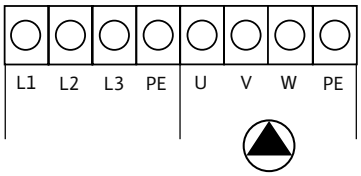

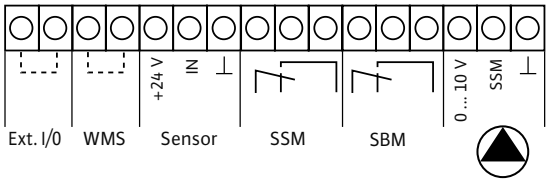

Optional pressure switch kit for low-water cut-out
(switches pump via WMS)

Technical data Wilo-Comfort-Vario COR-1 Helix VE.../VR

Pump curves

Wilo-Comfort-Vario COR -1 Helix VE 2205/K/VR

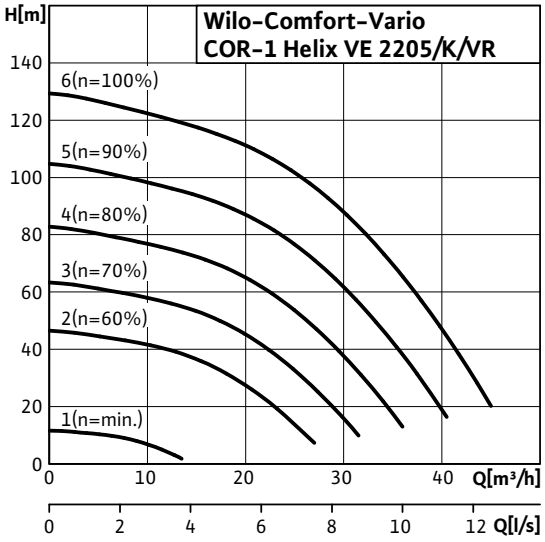

Dimension drawing

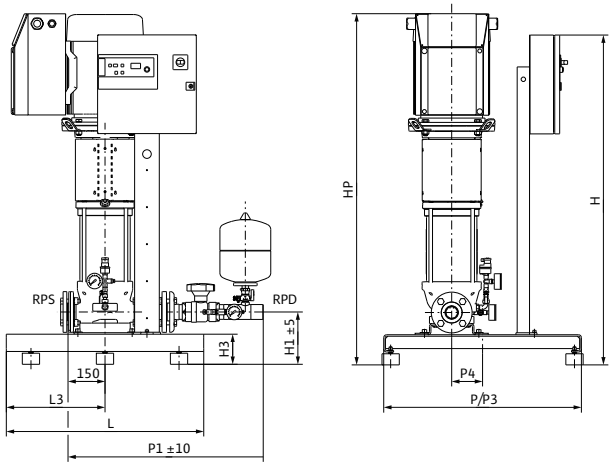

Sample systems are shown. Switchbox position depends on pump height.
Accessories (to be ordered separately): Optional WMS low-water cut-out switchgear kit
Installation surface: flat and horizontal
Installation location: dry, well ventilated and frost-proof

Motor data

Wilo-Comfort-Vario COR-1...	Nominal motor power	Nominal current 3~400 V, 50 Hz	Motor efficiency		
	P_2	I_N	$\eta_{m\,50\%}$	$\eta_{m\,75\%}$	$\eta_{m\,100\%}$
	kW	A	%		
Helix VE 2205/K/VR	11	21.2	88.8	90.2	90.5

Motor efficiency based on 400 V, 50 Hz

Dimensions, weights

Wilo-Comfort-Vario COR-1...	Nominal diameters of the pipe connections on suction side	Nominal diameters of pipe connections on the pressure side	Dimensions									Weight approx.
	RPS	*RPD*	*H*	*H1*	*H3*	*HP*	*L*	*L3*	*P*	*P1*	*P3*	*m*
			mm									kg
Helix VE 2205/K/VR	Rp 2	R 2	1335	215	125	1421	800	400	800	795	800	287

Pressure boosting

Single pump systems, speed-controlled

Technical data Wilo-Comfort-Vario COR-1 Helix VE.../VR

Pump curves

Wilo-Comfort-Vario COR -1 Helix VE 3604/K/VR

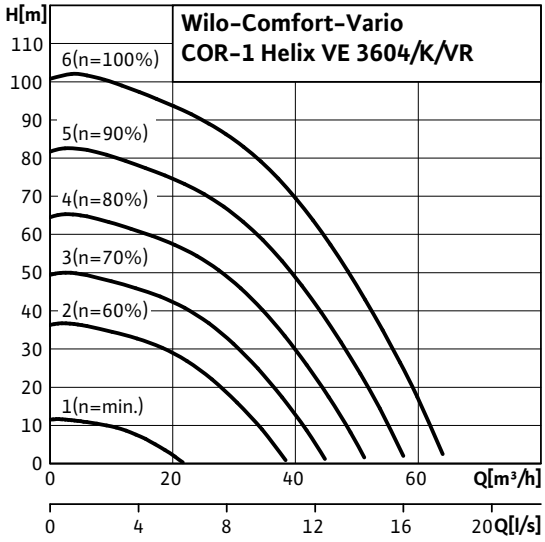

Dimension drawing

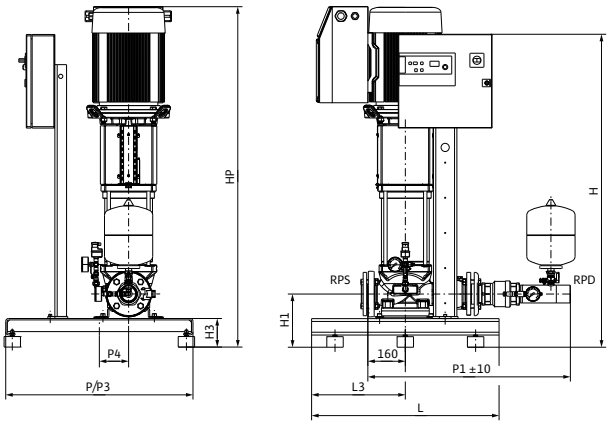

Sample systems are shown. Switchbox position depends on pump height.
Accessories (to be ordered separately): Optional WMS low-water cut-out switchgear kit
Installation surface: flat and horizontal
Installation location: dry, well ventilated and frost-proof

Motor data

Wilo-Comfort-Vario COR-1...	Nominal motor power	Nominal current 3~400 V, 50 Hz	Motor efficiency		
	P_2	I_N	$\eta_{m\ 50\%}$	$\eta_{m\ 75\%}$	$\eta_{m\ 100\%}$
	kW	A	%		
Helix VE 3604/K/VR	11	21.2	88.8	90.2	90.5

Motor efficiency based on 400 V, 50 Hz

Dimensions, weights

Wilo-Comfort-Vario COR-1...	Nominal diameters of the pipe connections on suction side	Nominal diameters of pipe connections on the pressure side	Dimensions									Weight approx.
	RPS	*RPD*	*H*	*H1*	*H3*	*HP*	*L*	*L3*	*P*	*P1*	*P3*	*m*
			mm									kg
Helix VE 3604/K/VR	DN 65	R 2½	1335	227	122	1450	800	400	800	865	800	278

Technical data Wilo-Comfort-Vario COR-1 Helix VE.../VR

Pump curves

Wilo-Comfort-Vario COR -1 Helix VE 3605/K/VR

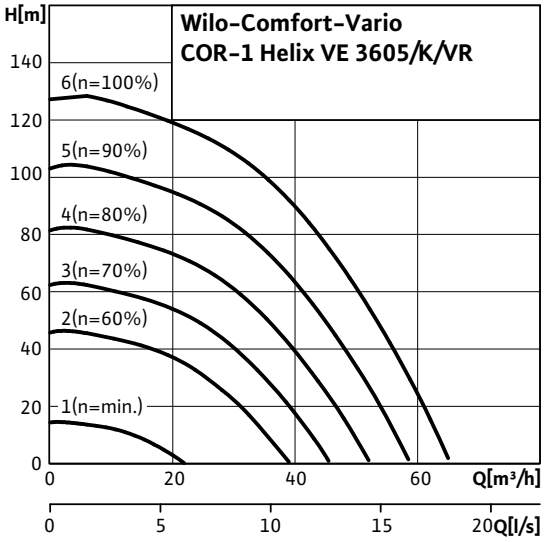

Dimension drawing

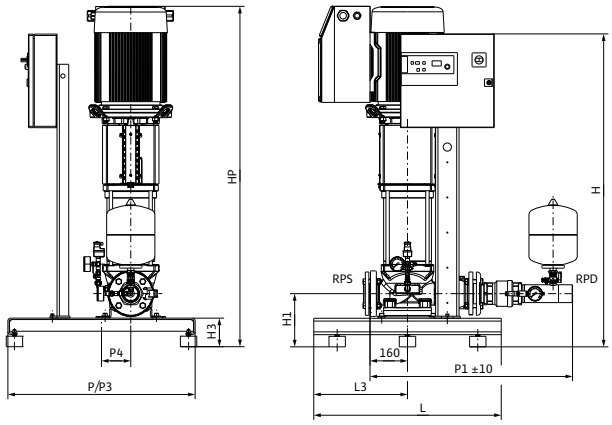

Sample systems are shown. Switchbox position depends on pump height.
Accessories (to be ordered separately): Optional WMS low-water cut-out switchgear kit
Installation surface: flat and horizontal
Installation location: dry, well ventilated and frost-proof

Motor data

Wilo-Comfort-Vario COR-1...	Nominal motor power	Nominal current 3~400 V, 50 Hz	Motor efficiency		
	P_2	I_N	$\eta_{m\,50\%}$	$\eta_{m\,75\%}$	$\eta_{m\,100\%}$
	kW	A	%		
Helix VE 3605/K/VR	15	25.4	87.0	89.7	90.6

Motor efficiency based on 400 V, 50 Hz

Dimensions, weights

Wilo-Comfort-Vario COR-1...	Nominal diameters of the pipe connections on suction side	Nominal diameters of pipe connections on the pressure side	Dimensions									Weight approx.
	RPS	*RPD*	*H*	*H1*	*H3*	*HP*	*L*	*L3*	*P*	*P1*	*P3*	*m*
			mm									kg
Helix VE 3605/K/VR	DN 65	R 2½	1335	227	122	1528	800	400	800	865	800	310

Technical data Wilo-Comfort-Vario COR-1 Helix VE.../VR

Pump curves

Wilo-Comfort-Vario COR -1 Helix VE 5203/K/VR

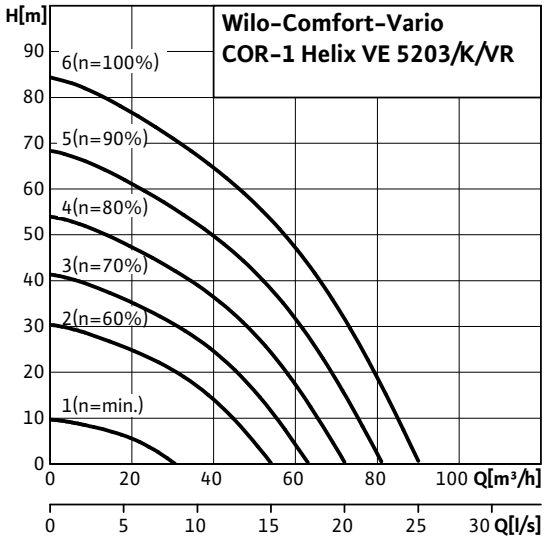

Dimension drawing

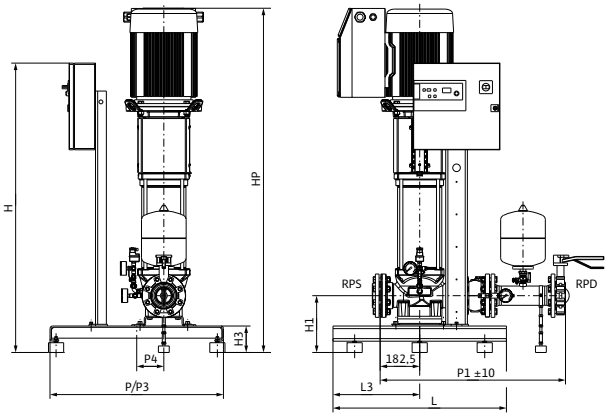

Sample systems are shown. Switchbox position depends on pump height.
Accessories (to be ordered separately): Optional WMS low-water cut-out switchgear kit
Installation surface: flat and horizontal
Installation location: dry, well ventilated and frost-proof

Motor data

Wilo-Comfort-Vario COR-1...	Nominal motor power	Nominal current 3~400 V, 50 Hz	Motor efficiency		
	P_2	I_N	$\eta_{m\ 50\%}$	$\eta_{m\ 75\%}$	$\eta_{m\ 100\%}$
	kW	A	%		
Helix VE 5203/K/VR	11	21.2	88.8	90.2	90.5

Motor efficiency based on 400 V, 50 Hz

Dimensions, weights

Wilo-Comfort-Vario COR-1...	Nominal diameters of the pipe connections on suction side	Nominal diameters of pipe connections on the pressure side	Dimensions									Weight approx.
	RPS	*RPD*	*H*	*H1*	*H3*	*HP*	*L*	*L3*	*P*	*P1*	*P3*	*m*
			mm									kg
Helix VE 5203/K/VR	DN 80	DN 80	1355	262	122	1485	800	400	800	855	800	345

Technical data Wilo-Comfort-Vario COR-1 Helix VE.../VR

Pump curves

Wilo-Comfort-Vario COR -1 Helix VE 5204/K/VR

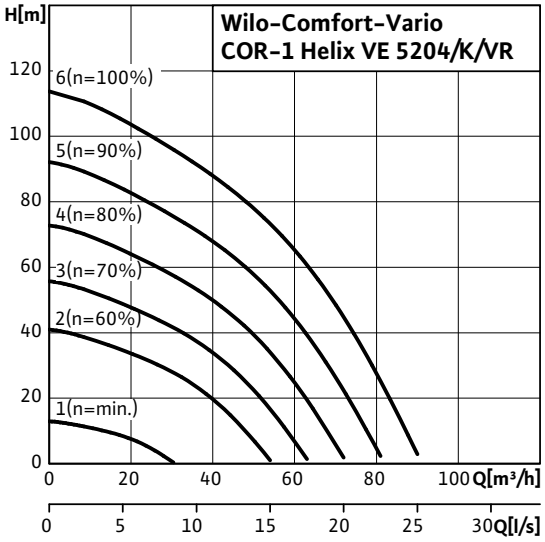

Dimension drawing

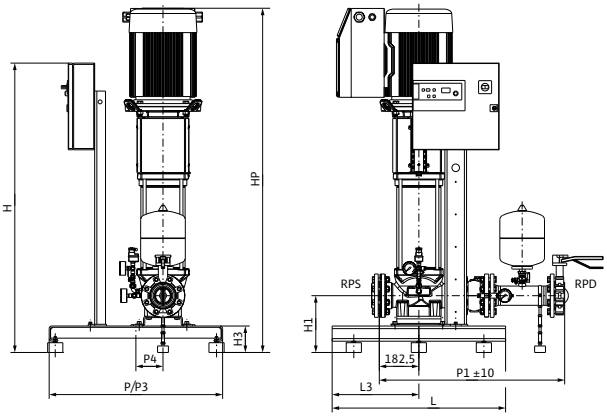

Sample systems are shown. Switchbox position depends on pump height.
Accessories (to be ordered separately): Optional WMS low-water cut-out switchgear kit
Installation surface: flat and horizontal
Installation location: dry, well ventilated and frost-proof

Motor data

Wilo-Comfort-Vario COR-1...	Nominal motor power	Nominal current 3~400 V, 50 Hz	Motor efficiency		
	P_2	I_N	$\eta_{m\ 50\%}$	$\eta_{m\ 75\%}$	$\eta_{m\ 100\%}$
	kW	A	%		
Helix VE 5204/K/VR	15	25.4	87.0	89.7	90.6

Motor efficiency based on 400 V, 50 Hz

Dimensions, weights

Wilo-Comfort-Vario COR-1...	Nominal diameters of the pipe connections on suction side	Nominal diameters of pipe connections on the pressure side	Dimensions									Weight approx.
	RPS	*RPD*	*H*	*H1*	*H3*	*HP*	*L*	*L3*	*P*	*P1*	*P3*	*m*
			mm									kg
Helix VE 5204/K/VR	DN 80	DN 80	1355	262	122	1596	800	400	800	855	800	359

Technical data Wilo-Comfort-Vario COR-1 Helix VE.../VR

Pump curves

Wilo-Comfort-Vario COR -1 Helix VE 5205/K/VR

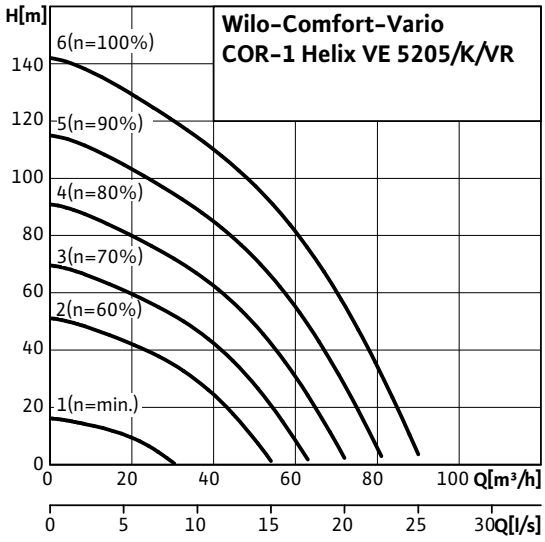

Dimension drawing

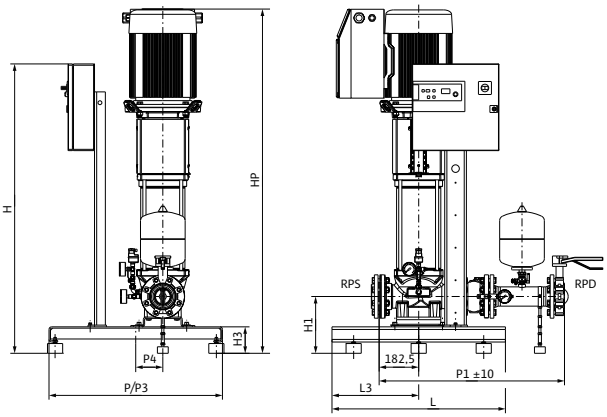

Sample systems are shown. Switchbox position depends on pump height.
Accessories (to be ordered separately): Optional WMS low-water cut-out switchgear kit
Installation surface: flat and horizontal
Installation location: dry, well ventilated and frost-proof

Motor data

Wilo-Comfort-Vario COR-1...	Nominal motor power	Nominal current 3~400 V, 50 Hz	Motor efficiency		
	P_2	I_N	$\eta_{m\ 50\%}$	$\eta_{m\ 75\%}$	$\eta_{m\ 100\%}$
	kW	A	%		
Helix VE 5205/K/VR	18.5	33.6	89.4	90.6	91.1

Motor efficiency based on 400 V, 50 Hz

Dimensions, weights

Wilo-Comfort-Vario COR-1...	Nominal diameters of the pipe connections on suction side	Nominal diameters of pipe connections on the pressure side	Dimensions									Weight approx.
	RPS	*RPD*	*H*	*H1*	*H3*	*HP*	*L*	*L3*	*P*	*P1*	*P3*	*m*
			mm									kg
Helix VE 5205/K/VR	DN 80	DN 80	1355	262	122	1734	800	400	800	855	800	400

Series description Wilo-Comfort-Vario COR-1 MVIE...-GE

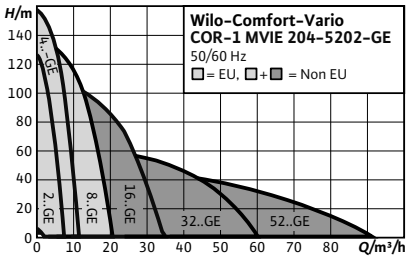

Design
Water-supply unit with a non-self-priming high-pressure multistage centrifugal pump and integrated speed control

Type key

Example:	**Wilo COR-1 MVIE 204/GE**
CO	Compact pressure boosting system
R	Regulation (control) by frequency converter
1	With one pump
MVIE	Pump series
2	Rated volume flow of the single pump [m^3/h]
04	Number of single-pump stages
GE	GrundEinheit (basic unit); in other words, without an additional control device

Application
- Fully automatic water supply in inlet mode, either from the public water supply network or from a tank.
- Pumping of potable water, process water, cooling water, water for fire-fighting or other water mixtures that do not chemically or mechanically attack the materials used and do not contain abrasive or long-fibre constituents

Special features/product advantages
- Sturdy system due to MVIE series stainless-steel high-pressure multistage centrifugal pumps with air-cooled integrated frequency converter
- IEC three-phase motor (level IE2. from 0.75 kW), 2-pole
- Superproportionally large control range of the frequency converter
- Integrated full motor protection via PTC
- Integrated dry-running detection with automatic deactivation in the event of low water via performance characteristics of the motor control electronics

Technical data
- Mains connection 3~400 V ± 10 %, 50 Hz; 3~380 V ±10 %, 60 Hz or, depending on type, also 1~230 V ± 10 %, 50 Hz; 1~220 V ±10 %, 60 Hz (other versions on request)
- Max. fluid temperature 50 °C (70 °C optional)
- Max. ambient temperature 40 °C
- Operating pressure 16 bar
- Inlet pressure 6 bar
- Nominal connection diameters on discharge side R 1¼" - R 1½"
- Nominal connection diameters on inlet side Rp 1¼" - Rp 1½"
- Speed range 1160 - 3500 rpm
- Protection class IP 54
- Fuse protection on mains side AC 3 according to motor power and EVU regulations
- Approved fluids (other fluids on request):
  - Pure water without settling sediments
  - Process water, cold water, cooling water and rainwater
  - Potable water

Equipment/function
- 1 MVIE series pump with infinitely variable control mode via integrated frequency converter
- All components in contact with the fluid are corrosion-resistant
- Check valve, pressure side
- Non-return valve, pressure side
- Diaphragm pressure vessel 8 l, PN16

Materials
- Impellers 1.4301/1.4404 stainless steel
- Stage chambers 1.4301/1.4404 stainless steel
- Pump housing EN-GJL-250/1.4404
- Shaft 1.4057/1.4404 stainless steel
- Gaskets EPDM (EP851)/FKM (Viton)
- Housing cover made of 1.4301/1.4404 stainless steel
- Housing bottom 1.4301/1.4404 stainless steel
- Mechanical seal B-carbon/tungsten carbide, SiC/carbon
- Pressure shroud 1.4301/1.4404 stainless steel
- Bearing, tungsten carbide
- Pipework made of 1.4571 stainless steel

Description/design
- Base frame: Galvanised steel with height-adjustable vibration dampers for comprehensive insulation against structure-borne noise
- Pipework: complete pressure-side pipework made of stainless steel, suitable for the connection of all piping materials used in building services; the pipework is dimensioned according to the overall hydraulic performance of the pressure boosting system
- Pumps: 1 pump from the series MVIE 2.., 4.., 8.., 16.., 32.. or 52.. (up to max. motor power of 7.5 kW) is used; the adapted, air-cooled frequency converter on the pump motor enables continuous auto control between 26 Hz and a maximum of 65 Hz for all pumps of these series; all pump components in contact with fluid are made of stainless steel

Series description Wilo-Comfort-Vario COR-1 MVIE...-GE

- Valves: the pump is fitted on the pressure side with a check valve with DVGW approval mark and a DVGW-approved non-return valve
- Diaphragm pressure vessel: 8 l/PN 16 located on the discharge side with a butyl rubber diaphragm, completely safe in accordance with food safety laws, for testing and inspection purposes, with shut-off ball cock, with drain and throughflow fitting according to DIN 4807

Scope of delivery

- Factory-mounted, connection-ready pressure boosting system checked for functionality and impermeability
- Packaging
- Installation and operating instructions

Note

Pressure boosting systems with other sizes of the installed pumps (MVIE 16..-6, MVIE 16, MVIE 32 and MVIE 52) are offered only outside the EU member states. Information on these products is available **on request**.

Electrical connection

1~230 V

Optional main switch
Optional pressure-switch kit for low-water cut-out (switches pump by Ext. I/O)

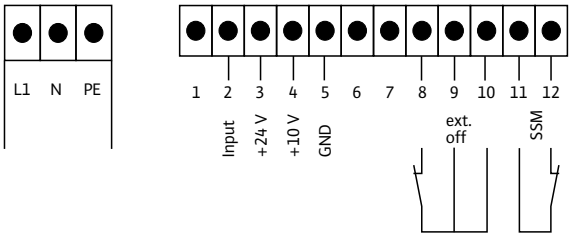

Electrical connection

3~400 V

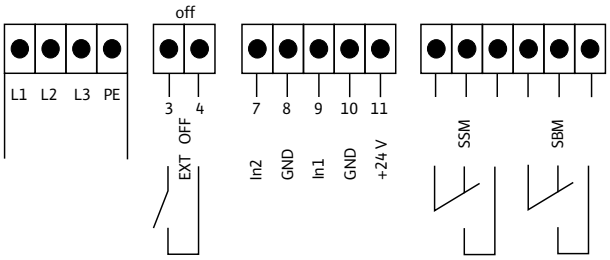

Optional main switch, optional pressure switch kit for low-water cut-out (switches pump via ext. I/O)

Electrical connection

3~400 V; 5.5-7.5 kW

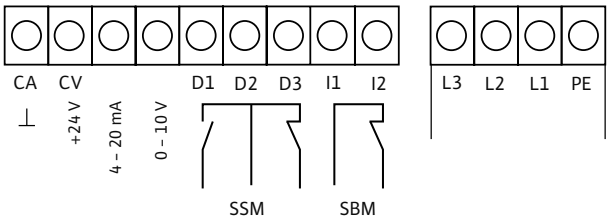

Technical data Wilo-Comfort-Vario COR-1 MVIE...-GE

Pump curves

Wilo-Comfort-Vario COR -1 MVIE 204-EM-GE

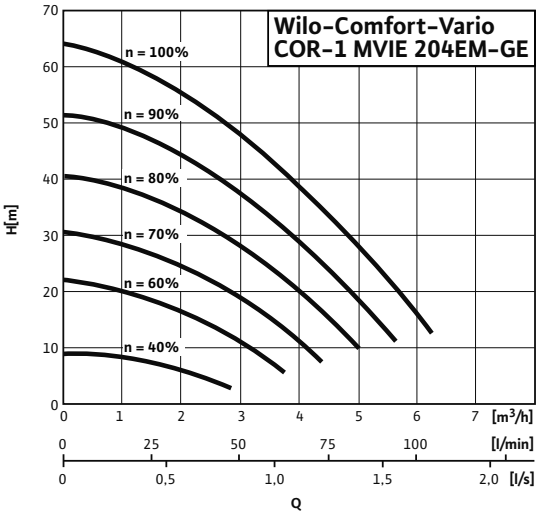

Dimension drawing

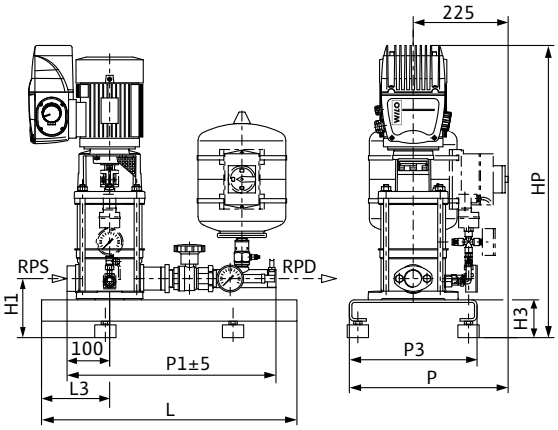

Sample systems are shown.
Accessories (to be ordered separately): Optional WMS low-water cut-out switchgear kit, main switch
Installation surface: flat and horizontal
Installation location: dry, well ventilated and frost-proof

Motor data		
Wilo-Comfort-Vario COR-1...	**Nominal motor power**	**Nominal current 1~230 V, 50 Hz**
	P_2	I_N
	kW	A
MVIE 204EM2-GE	1.1	12.4

Dimensions, weights												
Wilo-Comfort-Vario COR-1...	**Nominal diameters of the pipe connections on suction side**	**Nominal diameters of pipe connections on the pressure side**	**Dimensions**									**Weight approx.**
	RPS	*RPD*	*H*	*H1*	*H3*	*HP*	*L*	*L3*	*P*	*P1*	*P3*	*m*
			mm									kg
MVIE 204EM2-GE	Rp 1¼	R 1¼	688	140	90	688	600	160	375	490	300	50

Pressure boosting

Single pump systems, speed-controlled

Technical data Wilo-Comfort-Vario COR-1 MVIE...-GE

Pump curves

Wilo-Comfort-Vario COR -1 MVIE 403-EM-GE

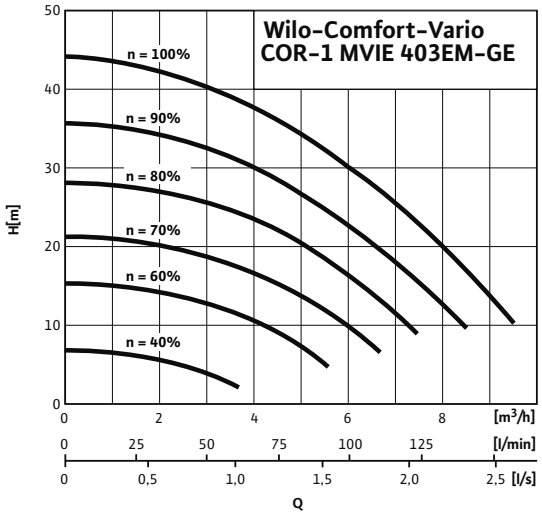

Dimension drawing

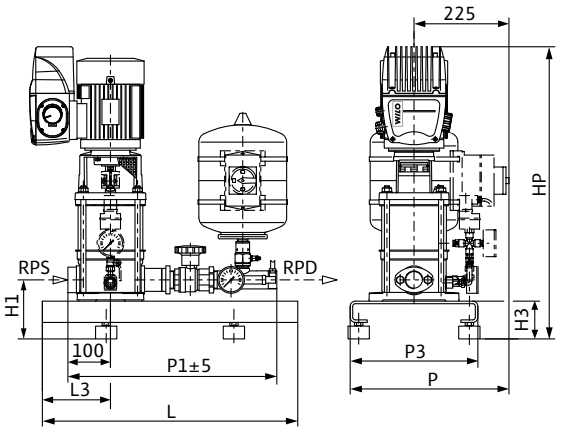

Sample systems are shown.
Accessories (to be ordered separately): Optional WMS low-water cut-out switchgear kit, main switch
Installation surface: flat and horizontal
Installation location: dry, well ventilated and frost-proof

Motor data

Wilo-Comfort-Vario COR-1...	Nominal motor power	Nominal current 1~230 V, 50 Hz
	P_2	I_N
	kW	A
MVIE 403EM2-GE	1.1	12.4

Dimensions, weights

Wilo-Comfort-Vario COR-1...	Nominal diameters of the pipe connections on suction side	Nominal diameters of pipe connections on the pressure side	Dimensions									Weight approx.
	RPS	*RPD*	*H*	*H1*	*H3*	*HP*	*L*	*L3*	*P*	*P1*	*P3*	*m*
			mm									kg
MVIE 403EM2-GE	Rp 1¼	Rp 1¼	664	140	90	664	600	160	375	490	300	51

Technical data Wilo-Comfort-Vario COR-1 MVIE...-GE

Pump curves

Wilo-Comfort-Vario COR -1 MVIE 204-GE

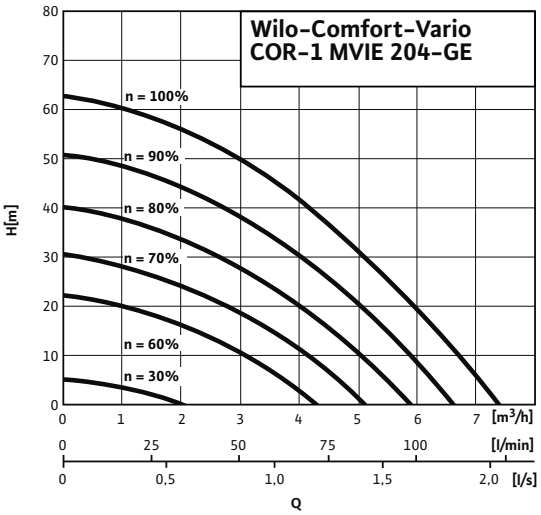

Dimension drawing

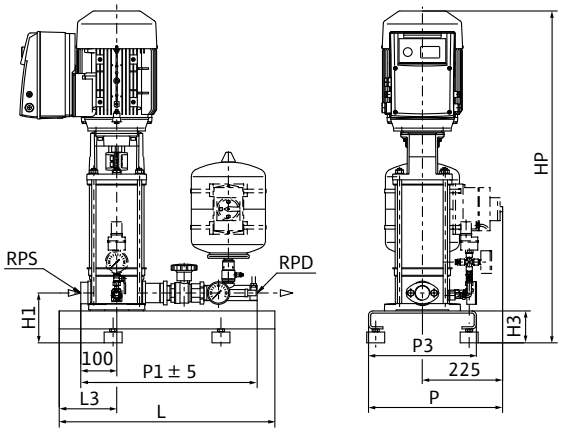

Sample systems are shown.
Accessories (to be ordered separately): Optional WMS low-water cut-out switchgear kit, main switch
Installation surface: flat and horizontal
Installation location: dry, well ventilated and frost-proof

Motor data

Wilo-Comfort-Vario COR-1...	Nominal motor power	Nominal current 3~400 V, 50 Hz	Motor efficiency		
	P_2	I_N	$\eta_{m\,50\%}$	$\eta_{m\,75\%}$	$\eta_{m\,100\%}$
	kW	A	%		
MVIE 204-GE	1.1	3.3	79.0	82.0	82.5

Motor efficiency based on 400 V, 50 Hz

Dimensions, weights

Wilo-Comfort-Vario COR-1...	Nominal diameters of the pipe connections on suction side	Nominal diameters of pipe connections on the pressure side	Dimensions									Weight approx.
	RPS	*RPD*	*H*	*H1*	*H3*	*HP*	*L*	*L3*	*P*	*P1*	*P3*	*m*
			mm									kg
MVIE 204-GE	Rp 1¼	R 1¼	690	140	90	690	600	160	375	490	300	41.7

Technical data Wilo-Comfort-Vario COR-1 MVIE...-GE

Pump curves

Wilo-Comfort-Vario COR -1 MVIE 208-GE

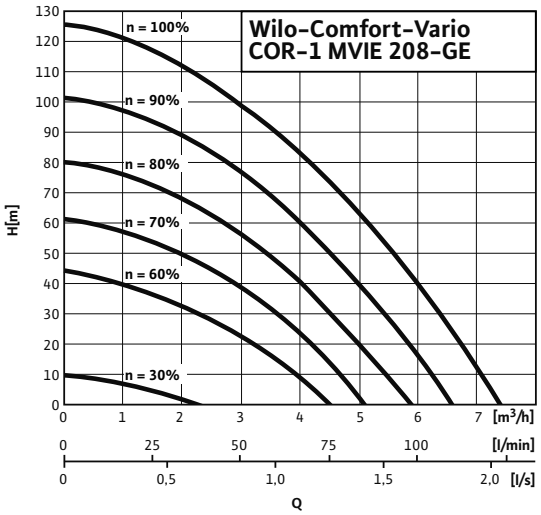

Dimension drawing

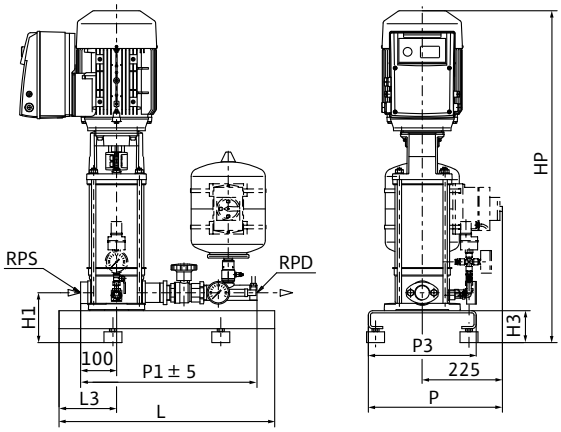

Sample systems are shown.
Accessories (to be ordered separately): Optional WMS low-water cut-out switchgear kit, main switch
Installation surface: flat and horizontal
Installation location: dry, well ventilated and frost-proof

Motor data

Wilo-Comfort-Vario COR-1...	Nominal motor power	Nominal current 3~400 V, 50 Hz	Motor efficiency		
	P_2	I_N	$\eta_{m\ 50\%}$	$\eta_{m\ 75\%}$	$\eta_{m\ 100\%}$
	kW	A	%		
MVIE 208-GE	2.2	5.6	81.0	84.0	85.5

Motor efficiency based on 400 V, 50 Hz

Dimensions, weights

Wilo-Comfort-Vario COR-1...	Nominal diameters of the pipe connections on suction side	Nominal diameters of pipe connections on the pressure side	Dimensions									Weight approx.
	RPS	*RPD*	*H*	*H1*	*H3*	*HP*	*L*	*L3*	*P*	*P1*	*P3*	*m*
			mm									kg
MVIE 208-GE	Rp 1¼	R 1¼	817	140	90	817	600	160	375	490	300	60.9

Technical data Wilo-Comfort-Vario COR-1 MVIE...-GE

Pump curves

Wilo-Comfort-Vario COR -1 MVIE 403-GE

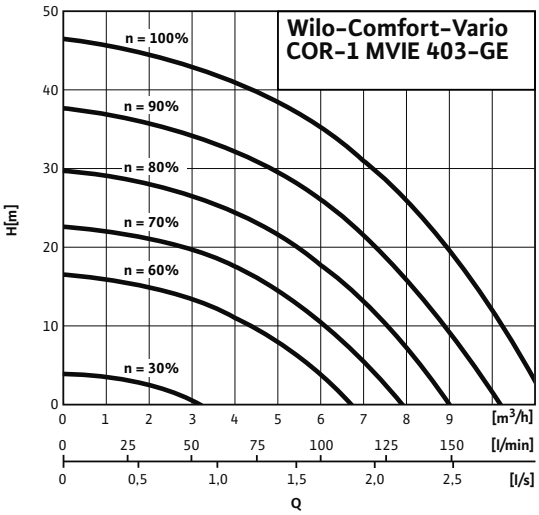

Dimension drawing

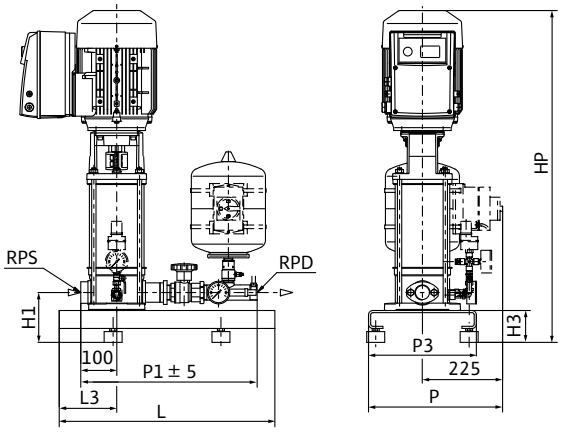

Sample systems are shown.
Accessories (to be ordered separately): Optional WMS low-water cut-out switchgear kit, main switch
Installation surface: flat and horizontal
Installation location: dry, well ventilated and frost-proof

Motor data

Wilo-Comfort-Vario COR-1...	Nominal motor power	Nominal current 3~400 V, 50 Hz	Motor efficiency		
	P_2	I_N	$\eta_{m\,50\%}$	$\eta_{m\,75\%}$	$\eta_{m\,100\%}$
	kW	A	%		
MVIE 403-GE	1.1	3.3	79.0	82.0	82.5

Motor efficiency based on 400 V, 50 Hz

Dimensions, weights

Wilo-Comfort-Vario COR-1...	Nominal diameters of the pipe connections on suction side	Nominal diameters of pipe connections on the pressure side	Dimensions									Weight approx.
	RPS	*RPD*	*H*	*H1*	*H3*	*HP*	*L*	*L3*	*P*	*P1*	*P3*	*m*
			mm									kg
MVIE 403-GE	Rp 1¼	Rp 1¼	642	140	90	642	600	160	375	490	300	47.9

Technical data Wilo-Comfort-Vario COR-1 MVIE...-GE

Pump curves

Wilo-Comfort-Vario COR -1 MVIE 406-GE

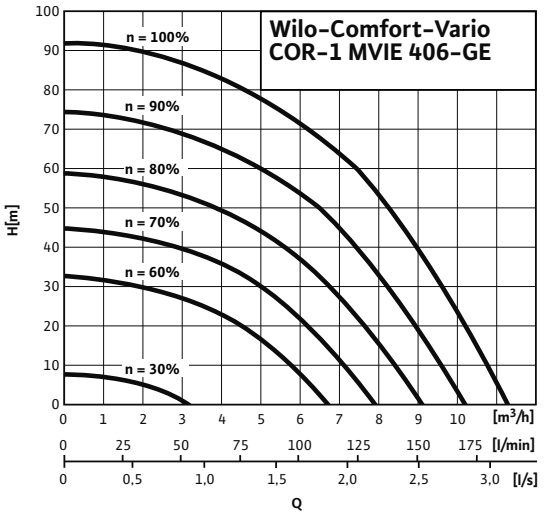

Dimension drawing

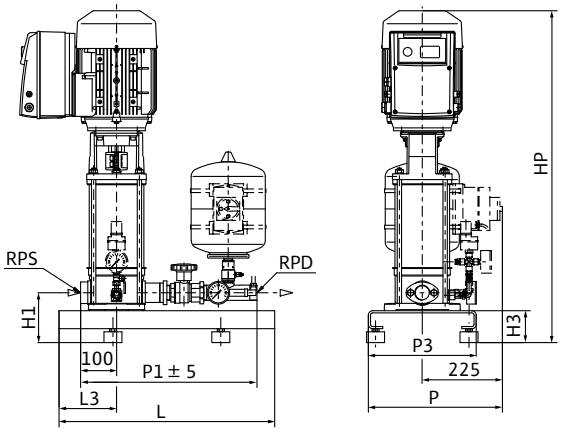

Sample systems are shown.
Accessories (to be ordered separately): Optional WMS low-water cut-out switchgear kit, main switch
Installation surface: flat and horizontal
Installation location: dry, well ventilated and frost-proof

Motor data

Wilo-Comfort-Vario COR-1...	Nominal motor power	Nominal current 3~400 V, 50 Hz	Motor efficiency		
	P_2	I_N	$\eta_{m\ 50\%}$	$\eta_{m\ 75\%}$	$\eta_{m\ 100\%}$
	kW	A	%		
MVIE 406-GE	2.2	5.6	81.0	84.0	85.5

Motor efficiency based on 400 V, 50 Hz

Dimensions, weights

Wilo-Comfort-Vario COR-1...	Nominal diameters of the pipe connections on suction side	Nominal diameters of pipe connections on the pressure side	Dimensions									Weight approx.
	RPS	*RPD*	*H*	*H1*	*H3*	*HP*	*L*	*L3*	*P*	*P1*	*P3*	*m*
			mm									kg
MVIE 406-GE	Rp 1¼	Rp 1¼	769	140	90	769	600	160	375	490	300	61.9

Technical data Wilo-Comfort-Vario COR-1 MVIE...-GE

Pump curves

Wilo-Comfort-Vario COR -1 MVIE 410-GE

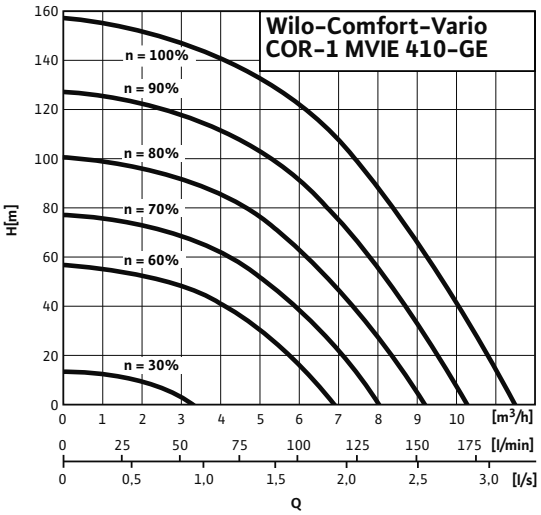

Dimension drawing

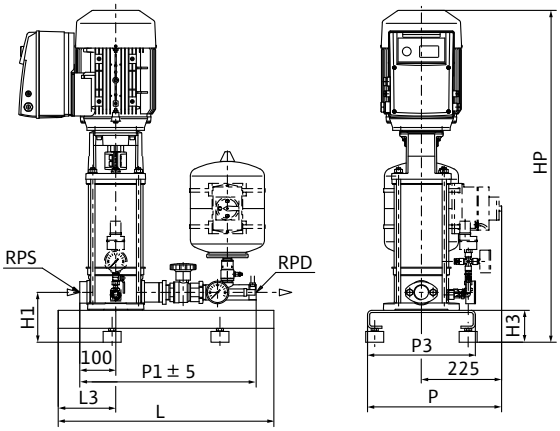

Sample systems are shown.
Accessories (to be ordered separately): Optional WMS low-water cut-out switchgear kit, main switch
Installation surface: flat and horizontal
Installation location: dry, well ventilated and frost-proof

Motor data

Wilo-Comfort-Vario COR-1...	Nominal motor power	Nominal current 3~400 V, 50 Hz	Motor efficiency		
	P_2	I_N	$\eta_{m\,50\%}$	$\eta_{m\,75\%}$	$\eta_{m\,100\%}$
	kW	A	%		
MVIE 410-GE	4	9.7	84.5	87.1	87.5

Motor efficiency based on 400 V, 50 Hz

Dimensions, weights

Wilo-Comfort-Vario COR-1...	Nominal diameters of the pipe connections on suction side	Nominal diameters of pipe connections on the pressure side	Dimensions									Weight approx.
	RPS	*RPD*	*H*	*H1*	*H3*	*HP*	*L*	*L3*	*P*	*P1*	*P3*	*m*
			mm									kg
MVIE 410-GE	Rp 1¼	Rp 1¼	925	140	90	925	600	160	375	490	300	70

Pressure boosting

Single pump systems, speed-controlled

Technical data Wilo-Comfort-Vario COR-1 MVIE...-GE

Pump curves

Wilo-Comfort-Vario COR -1 MVIE 803-GE

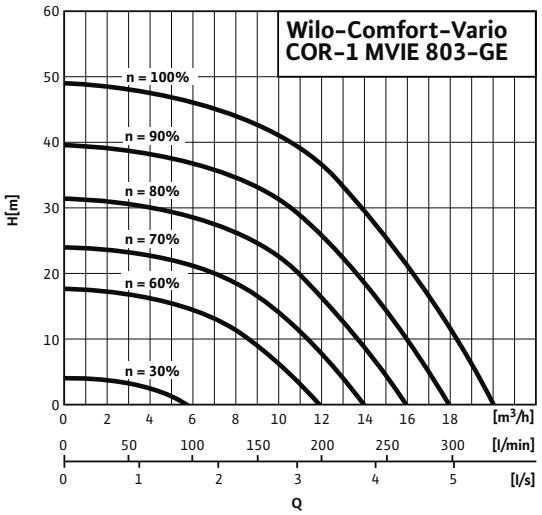

Dimension drawing

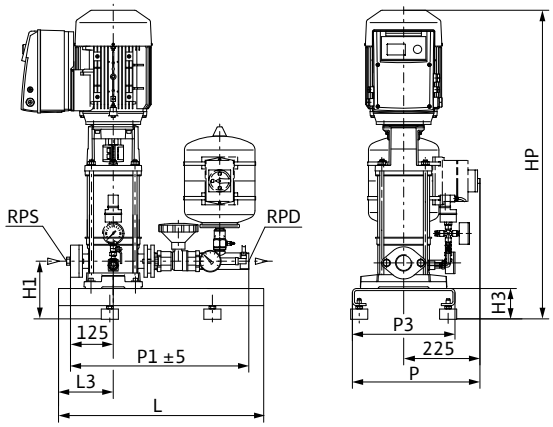

Sample systems are shown.
Accessories (to be ordered separately): Optional WMS low-water cut-out switchgear kit, main switch
Installation surface: flat and horizontal
Installation location: dry, well ventilated and frost-proof

Motor data

Wilo-Comfort-Vario COR-1...	Nominal motor power	Nominal current 3~400 V, 50 Hz	Motor efficiency		
	P_2	I_N	$\eta_{m\ 50\%}$	$\eta_{m\ 75\%}$	$\eta_{m\ 100\%}$
	kW	A	%		
MVIE 803-GE	2.2	5.6	81.0	84.0	85.5

Motor efficiency based on 400 V, 50 Hz

Dimensions, weights

Wilo-Comfort-Vario COR-1...	Nominal diameters of the pipe connections on suction side	Nominal diameters of pipe connections on the pressure side	Dimensions									Weight approx.
	RPS	*RPD*	*H*	*H1*	*H3*	*HP*	*L*	*L3*	*P*	*P1*	*P3*	*m*
			mm									kg
MVIE 803-GE	Rp 1½	R 1½	754	170	90	754	600	160	375	525	300	66

Technical data Wilo-Comfort-Vario COR-1 MVIE...-GE

Pump curves

Wilo-Comfort-Vario COR -1 MVIE 806-GE

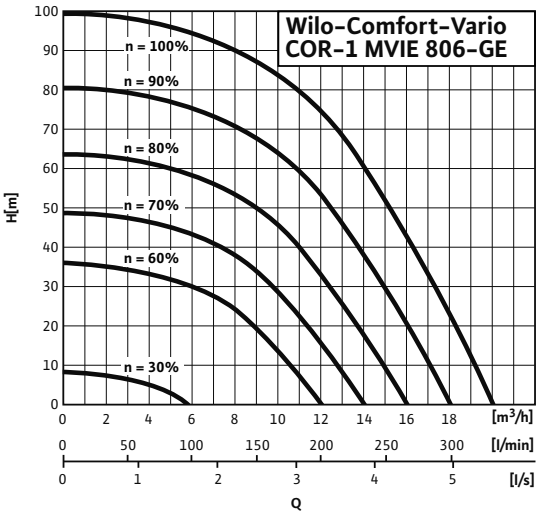

Dimension drawing

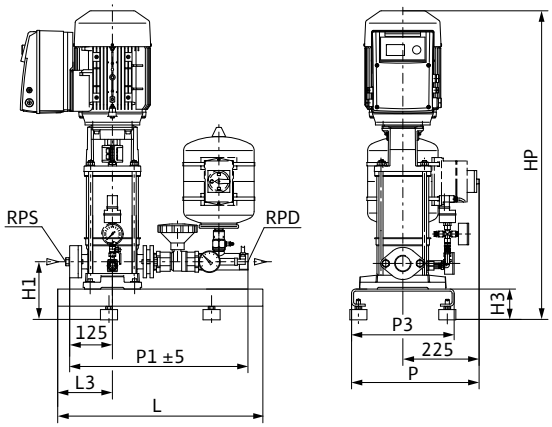

Sample systems are shown.
Accessories (to be ordered separately): Optional WMS low-water cut-out switchgear kit, main switch
Installation surface: flat and horizontal
Installation location: dry, well ventilated and frost-proof

Motor data

Wilo-Comfort-Vario COR-1...	Nominal motor power	Nominal current 3~400 V, 50 Hz	Motor efficiency		
	P_2	I_N	$\eta_{m\,50\%}$	$\eta_{m\,75\%}$	$\eta_{m\,100\%}$
	kW	A	%		
MVIE 806-GE	4	9.7	84.5	87.1	87.5

Motor efficiency based on 400 V, 50 Hz

Dimensions, weights

Wilo-Comfort-Vario COR-1...	Nominal diameters of the pipe connections on suction side	Nominal diameters of pipe connections on the pressure side	Dimensions									Weight approx.
	RPS	*RPD*	*H*	*H1*	*H3*	*HP*	*L*	*L3*	*P*	*P1*	*P3*	*m*
			mm									kg
MVIE 806-GE	Rp 1½	R 1½	904	170	90	904	600	160	375	525	300	85

Technical data Wilo-Comfort-Vario COR-1 MVIE...-GE

Pump curves

Wilo-Comfort-Vario COR -1 MVIE 808-GE

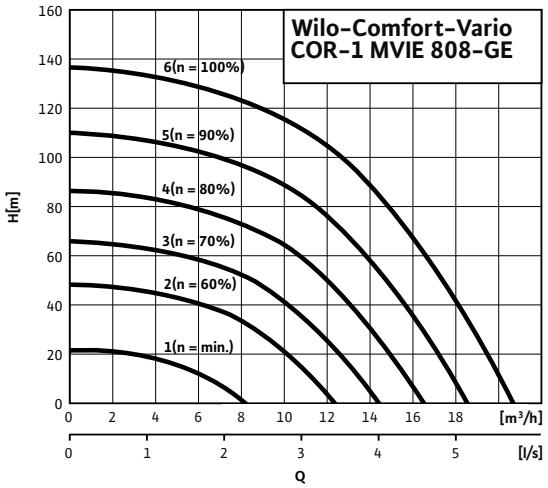

Dimension drawing

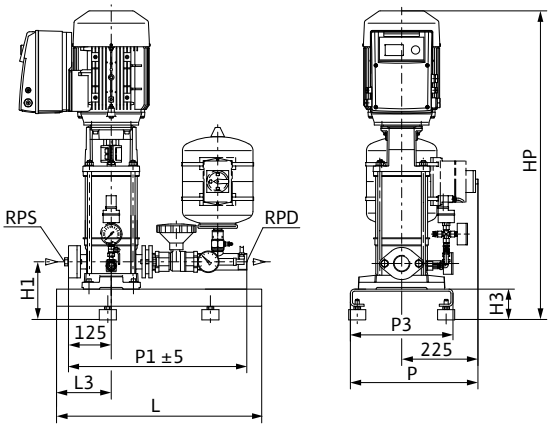

Sample systems are shown.
Accessories (to be ordered separately): Optional WMS low-water cut-out switchgear kit, main switch
Installation surface: flat and horizontal
Installation location: dry, well ventilated and frost-proof

Motor data

Wilo-Comfort-Vario COR-1...	Nominal motor power	Nominal current 3~400 V, 50 Hz	Motor efficiency		
	P_2	I_N	$\eta_{m\ 50\%}$	$\eta_{m\ 75\%}$	$\eta_{m\ 100\%}$
	kW	A	%		
MVIE 808-GE	5.5	11	87.4	88.5	88.5

Motor efficiency based on 400 V, 50 Hz

Dimensions, weights

Wilo-Comfort-Vario COR-1...	Nominal diameters of the pipe connections on suction side	Nominal diameters of pipe connections on the pressure side	Dimensions									Weight approx.
	RPS	*RPD*	*H*	*H1*	*H3*	*HP*	*L*	*L3*	*P*	*P1*	*P3*	*m*
			mm									kg
MVIE 808-GE	Rp 1½	R 1½	1052	205	125	1052	500	250	500	525	500	114

Technical data Wilo-Comfort-Vario COR-1 MVIE...-GE

Pump curves

Wilo-Comfort-Vario COR -1 MVIE 1602-GE

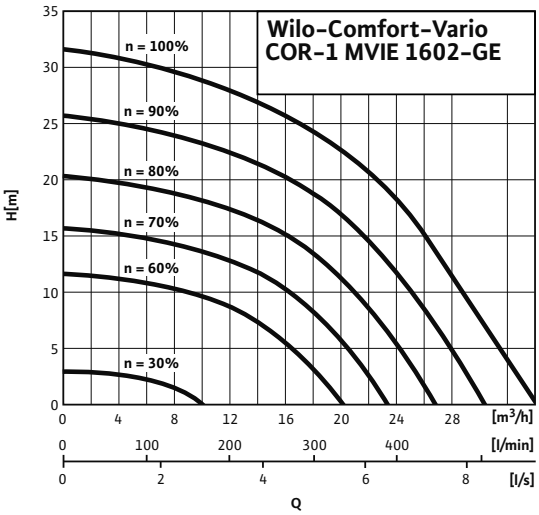

Dimension drawing

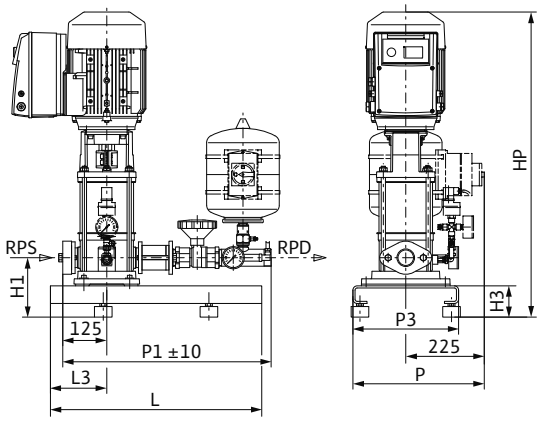

Sample systems are shown.
Accessories (to be ordered separately): Optional WMS low-water cut-out switchgear kit, main switch
Installation surface: flat and horizontal
Installation location: dry, well ventilated and frost-proof

Motor data

Wilo-Comfort-Vario COR-1...	Nominal motor power	Nominal current 3~400 V, 50 Hz	Motor efficiency		
	P_2	I_N	$\eta_{m\,50\%}$	$\eta_{m\,75\%}$	$\eta_{m\,100\%}$
	kW	A	%		
MVIE 1602-6-GE	2.2	5.6	81.0	84.0	85.5

Motor efficiency based on 400 V, 50 Hz

Dimensions, weights

Wilo-Comfort-Vario COR-1...	Nominal diameters of the pipe connections on suction side	Nominal diameters of pipe connections on the pressure side	Dimensions									Weight approx.
	RPS	*RPD*	*H*	*H1*	*H3*	*HP*	*L*	*L3*	*P*	*P1*	*P3*	*m*
			mm									kg
MVIE 1602-6-GE	Rp 1½	Rp 2	749	170	90	749	600	160	375	595	300	71

Pressure boosting

Single pump systems, speed-controlled

Technical data Wilo-Comfort-Vario COR-1 MVIE...-GE

Pump curves

Wilo-Comfort-Vario COR -1 MVIE 1603-GE

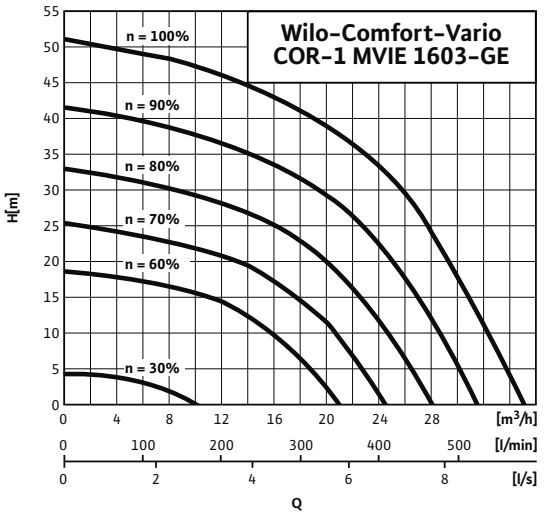

Dimension drawing

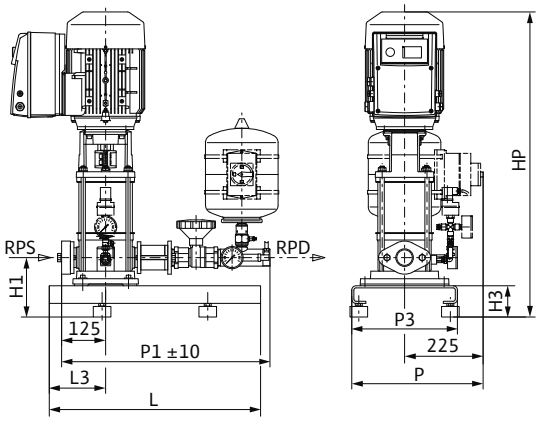

Sample systems are shown.
Accessories (to be ordered separately): Optional WMS low-water cut-out switchgear kit, main switch
Installation surface: flat and horizontal
Installation location: dry, well ventilated and frost-proof

Motor data

Wilo-Comfort-Vario COR-1...	Nominal motor power	Nominal current 3~400 V, 50 Hz	Motor efficiency		
	P_2	I_N	$\eta_{m\ 50\%}$	$\eta_{m\ 75\%}$	$\eta_{m\ 100\%}$
	kW	A	%		
MVIE 1603-6-GE	4	9.7	84.5	87.1	87.5

Motor efficiency based on 400 V, 50 Hz

Dimensions, weights

Wilo-Comfort-Vario COR-1...	Nominal diameters of the pipe connections on suction side	Nominal diameters of pipe connections on the pressure side	Dimensions									Weight approx.
	RPS	*RPD*	*H*	*H1*	*H3*	*HP*	*L*	*L3*	*P*	*P1*	*P3*	*m*
			mm									kg
MVIE 1603-6-GE	Rp 1½	Rp 2	884	170	90	884	600	160	375	595	300	85

Technical data Wilo-Comfort-Vario COR-1 MVIE...-GE

Pump curves

Wilo-Comfort-Vario COR -1 MVIE 1605-GE

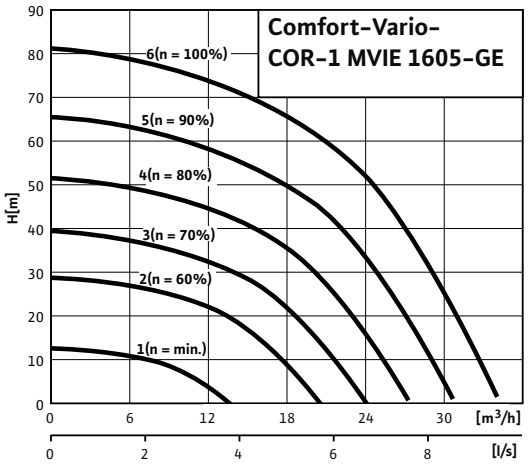

Dimension drawing

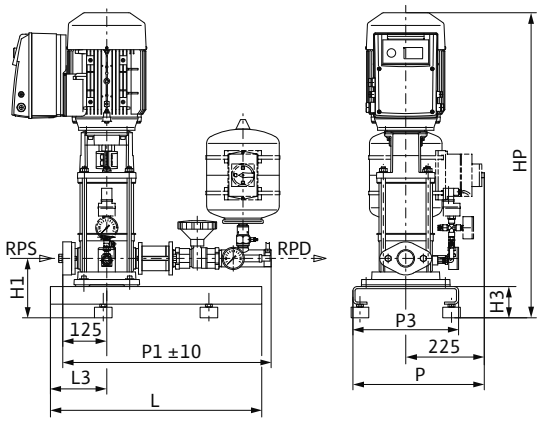

Sample systems are shown.
Accessories (to be ordered separately): Optional WMS low-water cut-out switchgear kit, main switch
Installation surface: flat and horizontal
Installation location: dry, well ventilated and frost-proof

Motor data

Wilo-Comfort-Vario COR-1...	Nominal motor power	Nominal current 3~400 V, 50 Hz	Motor efficiency		
	P_2	I_N	$\eta_{m\,50\%}$	$\eta_{m\,75\%}$	$\eta_{m\,100\%}$
	kW	A	%		
MVIE 1605-6-GE	5.5	10.8	87.4	88.5	88.5

Motor efficiency based on 400 V, 50 Hz

Dimensions, weights

Wilo-Comfort-Vario COR-1...	Nominal diameters of the pipe connections on suction side	Nominal diameters of pipe connections on the pressure side	Dimensions									Weight approx.
	RPS	*RPD*	*H*	*H1*	*H3*	*HP*	*L*	*L3*	*P*	*P1*	*P3*	*m*
			mm									kg
MVIE 1605-6-GE	Rp 2	R 2	1047	205	125	1047	500	250	500	595	500	119.3

Pressure boosting

Single pump systems, speed-controlled

Technical data Wilo-Comfort-Vario COR-1 MVIE...-GE

Pump curves

Wilo-Comfort-Vario COR -1 MVIE 1607-GE

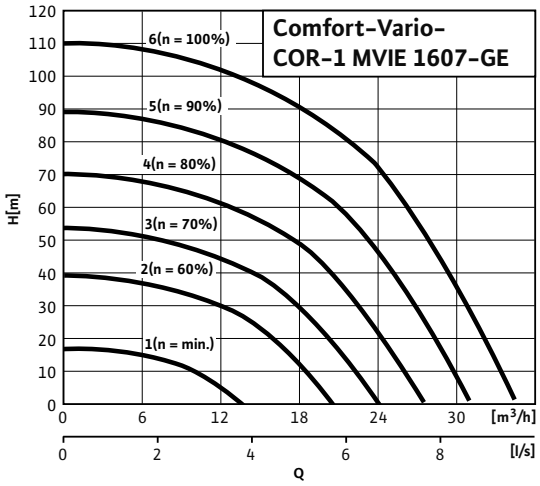

Dimension drawing

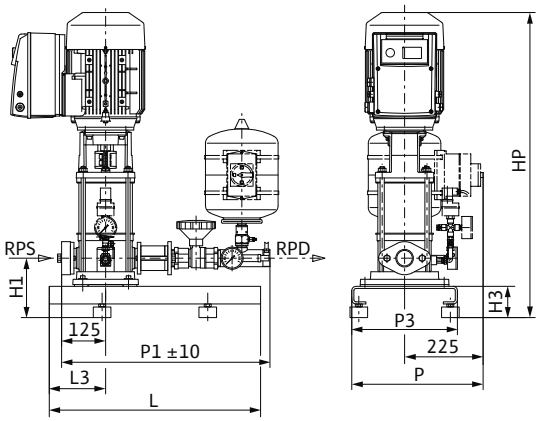

Sample systems are shown.
Accessories (to be ordered separately): Optional WMS low-water cut-out switchgear kit, main switch
Installation surface: flat and horizontal
Installation location: dry, well ventilated and frost-proof

Motor data

Wilo-Comfort-Vario COR-1...	Nominal motor power	Nominal current 3~400 V, 50 Hz	Motor efficiency		
	P_2	I_N	$\eta_{m\ 50\%}$	$\eta_{m\ 75\%}$	$\eta_{m\ 100\%}$
	kW	A	%		
MVIE 1607-6-GE	7.5	14.3	88.4	89.5	89.5

Motor efficiency based on 400 V, 50 Hz

Dimensions, weights

Wilo-Comfort-Vario COR-1...	Nominal diameters of the pipe connections on suction side	Nominal diameters of pipe connections on the pressure side	Dimensions									Weight approx.
	RPS	*RPD*	*H*	*H1*	*H3*	*HP*	*L*	*L3*	*P*	*P1*	*P3*	*m*
			mm									kg
MVIE 1607-6-GE	Rp 1½	Rp 2	1122	205	125	1122	500	250	500	595	500	113.4

Technical data Wilo-Comfort-Vario COR-1 MVIE...-GE

Pump curves

Wilo-Comfort-Vario COR -1 MVIE 3202-GE

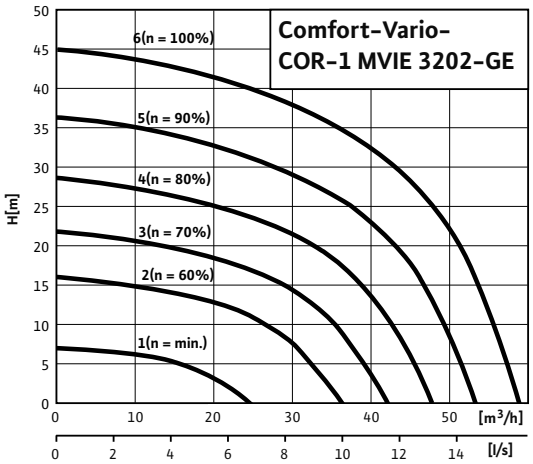

Dimension drawing

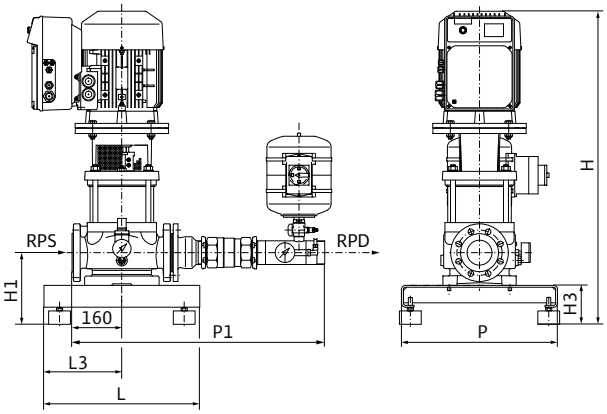

Sample systems are shown.
Accessories (to be ordered separately): Optional WMS low-water cut-out switchgear kit, main switch
Installation surface: flat and horizontal
Installation location: dry, well ventilated and frost-proof

Motor data

Wilo-Comfort-Vario COR-1...	Nominal motor power	Nominal current 3~400 V, 50 Hz	Motor efficiency		
	P_2	I_N	$\eta_{m\,50\%}$	$\eta_{m\,75\%}$	$\eta_{m\,100\%}$
	kW	A	%		
MVIE 3202-GE	5.5	10.6	87.4	88.5	88.5

Motor efficiency based on 400 V, 50 Hz

Dimensions, weights

Wilo-Comfort-Vario COR-1...	Nominal diameters of the pipe connections on suction side	Nominal diameters of pipe connections on the pressure side	Dimensions									Weight approx.
	RPS	*RPD*	*H*	*H1*	*H3*	*HP*	*L*	*L3*	*P*	*P1*	*P3*	*m*
			mm									kg
MVIE 3202-GE	DN 65	R 2½	967	230	125	967	500	250	500	855	500	162

Pressure boosting

Single pump systems, speed-controlled

Technical data Wilo-Comfort-Vario COR-1 MVIE...-GE

Pump curves

Wilo-Comfort-Vario COR -1 MVIE 3203-7,5-GE

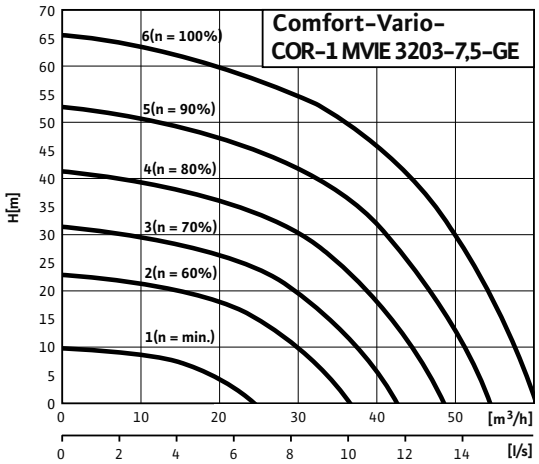

Dimension drawing

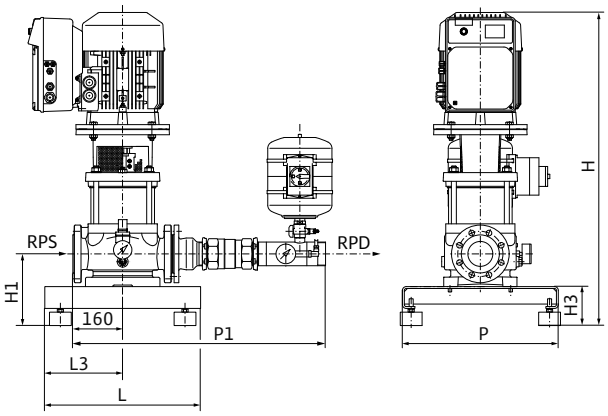

Sample systems are shown.
Accessories (to be ordered separately): Optional WMS low-water cut-out switchgear kit, main switch
Installation surface: flat and horizontal
Installation location: dry, well ventilated and frost-proof

Motor data

Wilo-Comfort-Vario COR-1...	Nominal motor power	Nominal current 3~400 V, 50 Hz	Motor efficiency		
	P_2	I_N	$\eta_{m\ 50\%}$	$\eta_{m\ 75\%}$	$\eta_{m\ 100\%}$
	kW	A	%		
MVIE 3203-7.5-GE	7.5	15.1	88.4	89.5	89.5

Motor efficiency based on 400 V, 50 Hz

Dimensions, weights

Wilo-Comfort-Vario COR-1...	Nominal diameters of the pipe connections on suction side	Nominal diameters of pipe connections on the pressure side	Dimensions									Weight approx.
	RPS	*RPD*	*H*	*H1*	*H3*	*HP*	*L*	*L3*	*P*	*P1*	*P3*	*m*
			mm									kg
MVIE 3203-7.5-GE	DN 65	R 2½	1012	230	125	1012	500	250	500	855	500	174

Technical data Wilo-Comfort-Vario COR-1 MVIE...-GE

Pump curves

Wilo-Comfort-Vario COR -1 MVIE 5202-GE

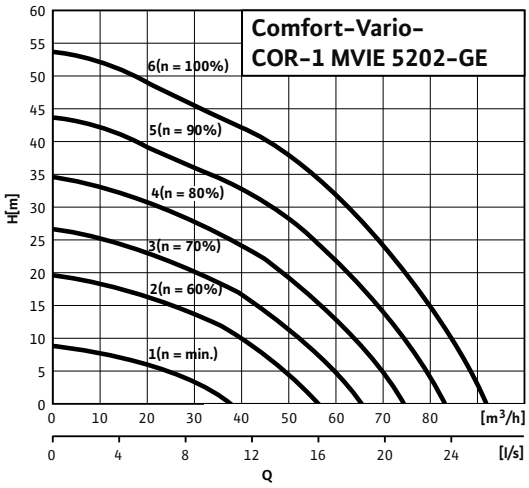

Dimension drawing

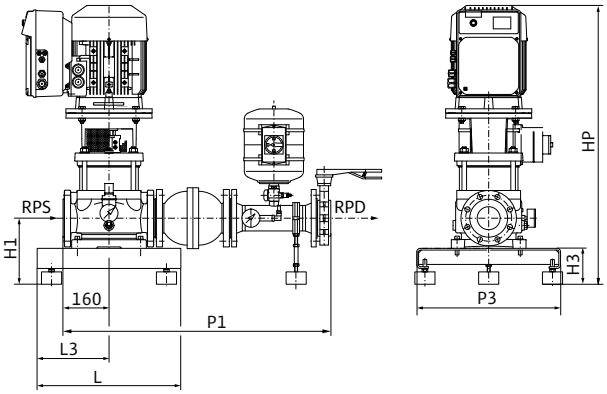

Sample systems are shown.
Accessories (to be ordered separately): Optional WMS low-water cut-out switchgear kit, main switch
Installation surface: flat and horizontal
Installation location: dry, well ventilated and frost-proof

Motor data

Wilo-Comfort-Vario COR-1...	Nominal motor power	Nominal current 3~400 V, 50 Hz	Motor efficiency		
	P_2	I_N	$\eta_{m\,50\%}$	$\eta_{m\,75\%}$	$\eta_{m\,100\%}$
	kW	A	%		
MVIE 5202-GE	7.5	14.7	88.4	89.5	89.5

Motor efficiency based on 400 V, 50 Hz

Dimensions, weights

Wilo-Comfort-Vario COR-1...	Nominal diameters of the pipe connections on suction side	Nominal diameters of pipe connections on the pressure side	Dimensions									Weight approx.
	RPS	*RPD*	*H*	*H1*	*H3*	*HP*	*L*	*L3*	*P*	*P1*	*P3*	*m*
			mm									kg
MVIE 5202-GE	DN 80	DN 80	977	230	125	977	500	250	500	935	500	172

Pressure boosting

Single pump systems, speed-controlled

Series description Wilo-Comfort-Vario COR-1 MVIE.../VR

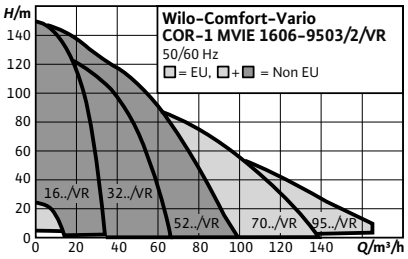

Design

Water-supply unit with a non-self-priming high-pressure multistage centrifugal pump with integrated frequency converter and Vario controller VR for motors from 7.5 kW

Type key

Example:	**Wilo-COR-1 MVIE 204/VR**
CO	Compact pressure boosting system
R	Regulation (control) by frequency converter
1	With one pump
MVIE	Pump series
2	Nominal volume of the single pump [m^3/h]
04	Number of single-pump stages
VR	Vario controller

Application

- Fully automatic water supply in inlet mode, either from the public water supply network or from a tank.
- Pumping of potable water, process water, cooling water, water for fire-fighting or other water mixtures that do not chemically or mechanically attack the materials used and do not contain abrasive or long-fibre constituents

Special features/product advantages

- Sturdy system due to MVIE series stainless-steel high-pressure multistage centrifugal pumps with air-cooled integrated frequency converter
- IEC three-phase motor (level IE2. from 0.75 kW), 2-pole
- Superproportionally large control range of the frequency converter
- Integrated full motor protection via PTC
- Integrated dry-running detection with automatic deactivation in the event of low water via performance characteristics of the motor control electronics

Technical data

- Mains connection 3~ 400 V ± 10 %, 50 Hz; 3~380/380 V ±10 %, 60 Hz (other versions on request)
- Max. fluid temperature 50 °C (70 °C optional)
- Max. ambient temperature 40 °C
- Operating pressure 16 bar
- Inlet pressure 10 bar
- Nominal connection diameter on inlet side DN 100
- Nominal connection diameter on pressure side DN 100
- Protection class IP 54 (VR control device)
- Fuse protection on mains side A, AC 3 according to motor power and EVU regulations

Equipment/function

- 1 MVIE series pump with infinitely variable control mode via integrated frequency converter
- Including VR control device for motor powers from 11 to 22 kW
- All components in contact with the fluid are corrosion-resistant
- Check valve, pressure side
- Non-return valve, pressure side
- Diaphragm pressure vessel 8 l, PN16

Materials

- Impellers 1.4301/1.4404 stainless steel
- Stage chambers 1.4301/1.4404 stainless steel
- Pump housing EN-GJL-250/1.4404
- Shaft, depending on type stainless steel 1.4057/1.4404
- Gaskets EPDM (EP851)/FKM (Viton)
- Housing cover made of 1.4301/1.4404 stainless steel
- Housing bottom 1.4301/1.4404 stainless steel
- Mechanical seal B-carbon/tungsten carbide, SiC/carbon
- Pressure shroud 1.4301/1.4404 stainless steel
- Bearing, tungsten carbide
- Pipework made of 1.4571 stainless steel

Description/design

- Base frame: Galvanised steel with height-adjustable vibration dampers for comprehensive insulation against structure-borne noise
- Pipework: complete pressure-side pipework made of stainless steel, suitable for the connection of all piping materials used in building services; the pipework is dimensioned according to the overall hydraulic performance of the pressure boosting system
- Pumps: 1 pump from the series MVIE 16.., 32.. or 52.. (up to max. motor power of 7.5 kW) is used; the adapted, air-cooled frequency converter on the pump motor enables infinitely variable auto control between 26 Hz and a maximum of 65 Hz for all pumps of these series; all pump components in contact with fluid are made of stainless steel
- Valves: the pump is fitted on the pressure side with a check valve with DVGW approval mark and a DVGW-approved non-return valve
- Diaphragm pressure vessel: 8 l/PN 16 located on the discharge side with a butyl rubber diaphragm, completely safe in accordance with food safety laws; for testing and inspection purposes, with shut-off ball cock, with drain and throughflow fitting according to DIN 4807

Series description Wilo-Comfort-Vario COR-1 MVIE.../VR

Scope of delivery
- Factory-mounted, connection-ready pressure boosting system checked for functionality and impermeability
- Packaging
- Installation and operating instructions

Note
Pressure boosting systems with other sizes of the installed pumps (MVIE 16..-6, MVIE 16, MVIE 32 and MVIE 52) are offered only outside the EU member states. Information on these products is available **on request**.

Electrical connection

3~400 V; 11-22 kW

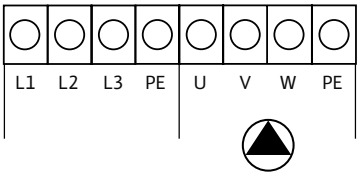

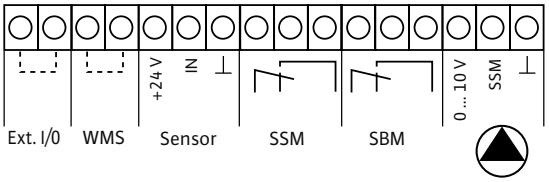

Optional pressure switch kit for low-water cut-out
(switches pump via WMS)

Pressure boosting

Single pump systems, speed-controlled

Technical data Wilo-Comfort-Vario COR-1 MVIE.../VR

Pump curves

Wilo-Comfort-Vario COR -1 MVIE 1606/VR

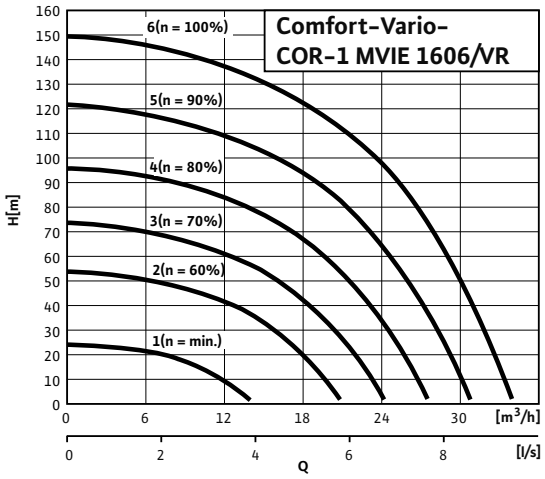

Dimension drawing

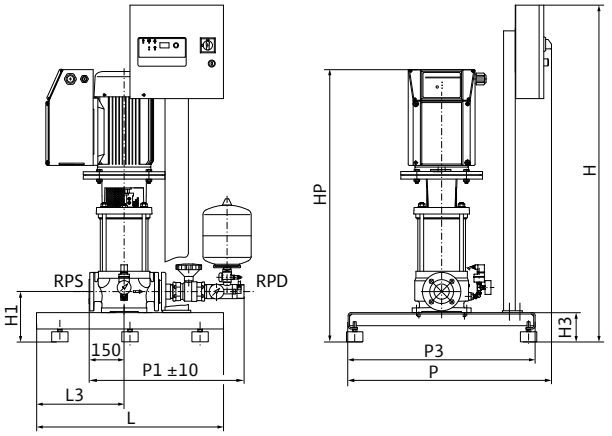

Sample systems are shown.
Accessories (to be ordered separately): Optional WMS low-water cut-out switchgear kit,
Installation surface: flat and horizontal
Installation location: dry, well ventilated and frost-proof

Motor data

Wilo Comfort-Vario COR-1...	Nominal motor power	Nominal current 3~400 V, 50 Hz	Motor efficiency		
	P_2	I_N	$\eta_{m\ 50\%}$	$\eta_{m\ 75\%}$	$\eta_{m\ 100\%}$
	kW	A	%		
MVIE 1606/VR	11	21.2	88.8	90.2	90.5

Motor efficiency based on 400 V, 50 Hz

Dimensions, weights

Wilo Comfort-Vario COR-1...	Nominal diameters of the pipe connections on suction side	Nominal diameters of pipe connections on the pressure side	Dimensions									Weight approx.
	RPS	*RPD*	*H*	*H1*	*H3*	*HP*	*L*	*L3*	*P*	*P1*	*P3*	*m*
			mm									kg
MVIE 1606/VR	DN 50	R 2	1441	215	125	1165	800	375	870	663	800	252

Technical data Wilo-Comfort-Vario COR-1 MVIE.../VR

Pump curves

Wilo-Comfort-Vario COR -1 MVIE 3203-11/VR

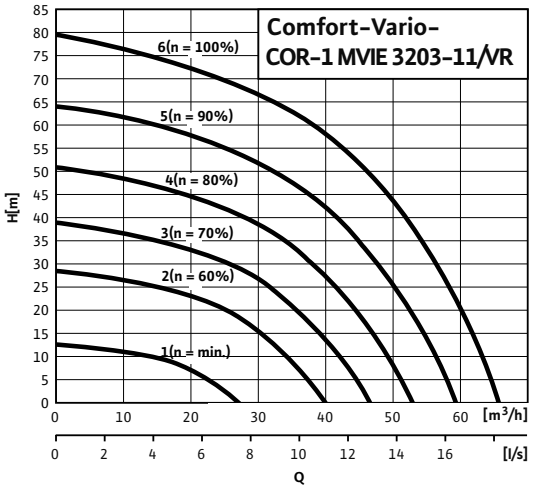

Dimension drawing

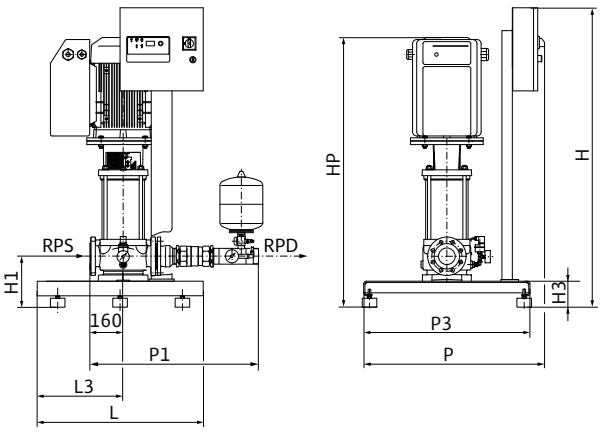

Sample systems are shown.
Accessories (to be ordered separately): Optional WMS low-water cut-out switchgear kit,
Installation surface: flat and horizontal
Installation location: dry, well ventilated and frost-proof

Motor data

Wilo Comfort-Vario COR-1...	Nominal motor power	Nominal current 3~400 V, 50 Hz	Motor efficiency		
	P_2	I_N	$\eta_{m\,50\%}$	$\eta_{m\,75\%}$	$\eta_{m\,100\%}$
	kW	A	%		
MVIE 3203-11/VR	11	21.2	88.8	90.2	90.5

Motor efficiency based on 400 V, 50 Hz

Dimensions, weights

Wilo Comfort-Vario COR-1...	Nominal diameters of the pipe connections on suction side	Nominal diameters of pipe connections on the pressure side	Dimensions									Weight approx.
	RPS	*RPD*	*H*	*H1*	*H3*	*HP*	*L*	*L3*	*P*	*P1*	*P3*	*m*
			mm									kg
MVIE 3203-11/VR	DN 65	R 2½	1441	245	125	1126	800	415	870	855	800	289

Pressure boosting

Single pump systems, speed-controlled

Technical data Wilo-Comfort-Vario COR-1 MVIE.../VR

Pump curves

Wilo-Comfort-Vario COR -1 MVIE 3204/VR

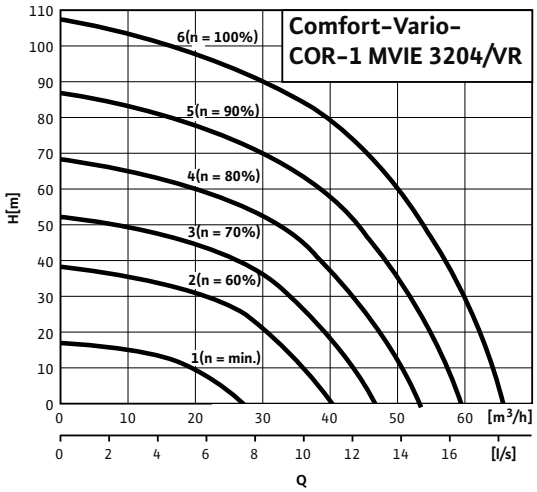

Dimension drawing

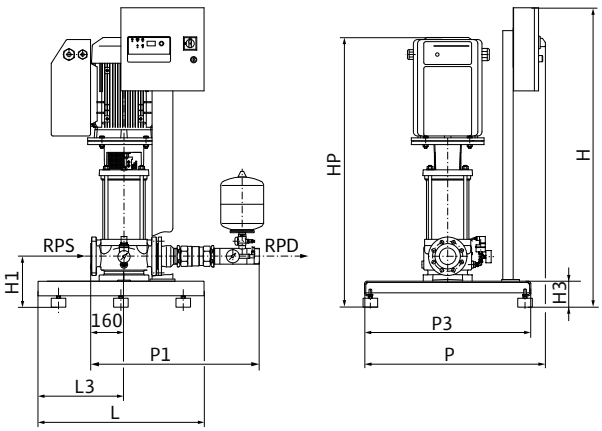

Sample systems are shown.
Accessories (to be ordered separately): Optional WMS low-water cut-out switchgear kit,
Installation surface: flat and horizontal
Installation location: dry, well ventilated and frost-proof

Motor data

Wilo Comfort-Vario COR-1...	Nominal motor power	Nominal current 3~400 V, 50 Hz	Motor efficiency		
	P_2	I_N	$\eta_{m\ 50\%}$	$\eta_{m\ 75\%}$	$\eta_{m\ 100\%}$
	kW	A	%		
MVIE 3204/VR	15	25.4	90.6	91.1	90.7

Motor efficiency based on 400 V, 50 Hz

Dimensions, weights

Wilo Comfort-Vario COR-1...	Nominal diameters of the pipe connections on suction side	Nominal diameters of pipe connections on the pressure side	Dimensions									Weight approx.
	RPS	*RPD*	*H*	*H1*	*H3*	*HP*	*L*	*L3*	*P*	*P1*	*P3*	*m*
			mm									kg
MVIE 3204/VR	DN 65	R 2½	1441	245	125	1158	800	415	870	855	800	308

Technical data Wilo-Comfort-Vario COR-1 MVIE.../VR

Pump curves

Wilo-Comfort-Vario COR -1 MVIE 3205/VR

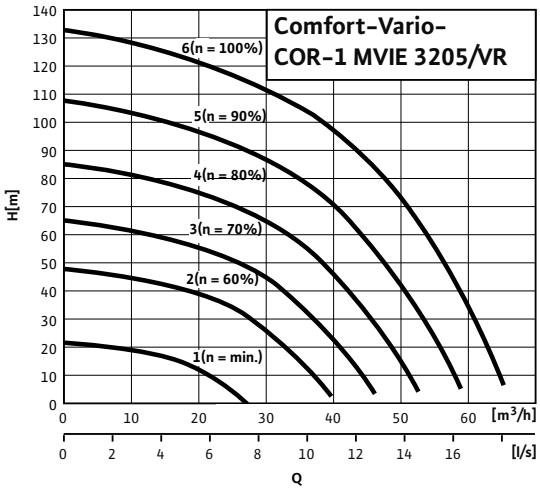

Dimension drawing

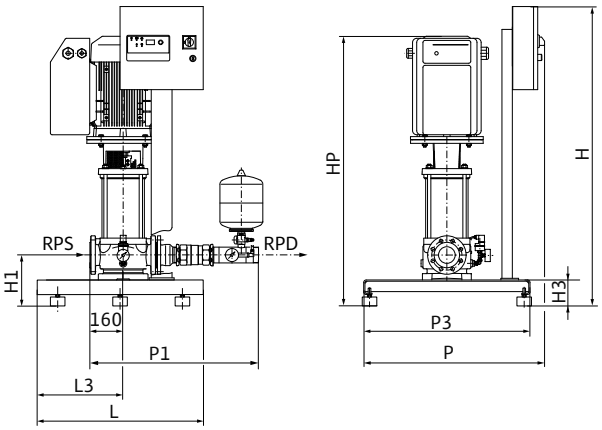

Sample systems are shown.
Accessories (to be ordered separately): Optional WMS low-water cut-out switchgear kit,
Installation surface: flat and horizontal
Installation location: dry, well ventilated and frost-proof

Motor data

Wilo Comfort-Vario COR-1...	Nominal motor power	Nominal current 3~400 V, 50 Hz	Motor efficiency		
	P_2	I_N	$\eta_{m\,50\%}$	$\eta_{m\,75\%}$	$\eta_{m\,100\%}$
	kW	A	%		
MVIE 3205/VR	18.5	33.6	89.4	90.6	91.1

Motor efficiency based on 400 V, 50 Hz

Dimensions, weights

Wilo Comfort-Vario COR-1...	Nominal diameters of the pipe connections on suction side	Nominal diameters of pipe connections on the pressure side	Dimensions									Weight approx.
	RPS	*RPD*	*H*	*H1*	*H3*	*HP*	*L*	*L3*	*P*	*P1*	*P3*	*m*
			mm									kg
MVIE 3205/VR	DN 65	R 2½	1441	245	125	1313	800	415	870	855	800	357

Pressure boosting

Single pump systems, speed-controlled

Technical data Wilo-Comfort-Vario COR-1 MVIE.../VR

Pump curves

Wilo-Comfort-Vario COR -1 MVIE 5203/VR

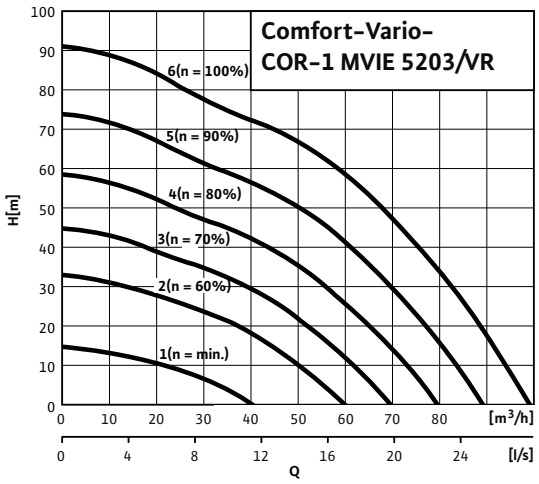

Dimension drawing

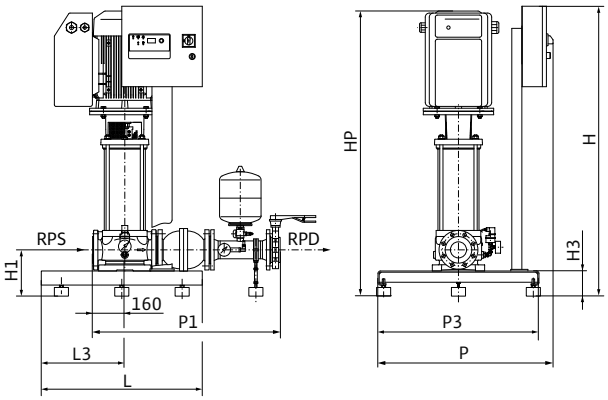

Sample systems are shown.
Accessories (to be ordered separately): Optional WMS low-water cut-out switchgear kit,
Installation surface: flat and horizontal
Installation location: dry, well ventilated and frost-proof

Motor data

Wilo Comfort-Vario COR-1...	Nominal motor power	Nominal current 3~400 V, 50 Hz	Motor efficiency		
	P_2	I_N	$\eta_{m\ 50\%}$	$\eta_{m\ 75\%}$	$\eta_{m\ 100\%}$
	kW	A	%		
MVIE 5203/VR	15	25.4	90.6	91.1	90.7

Motor efficiency based on 400 V, 50 Hz

Dimensions, weights

Wilo Comfort-Vario COR-1...	Nominal diameters of the pipe connections on suction side	Nominal diameters of pipe connections on the pressure side	Dimensions									Weight approx.
	RPS	*RPD*	*H*	*H1*	*H3*	*HP*	*L*	*L3*	*P*	*P1*	*P3*	*m*
			mm									kg
MVIE 5203/VR	DN 80	DN 80	1441	230	125	1159	800	415	870	935	800	311

Technical data Wilo-Comfort-Vario COR-1 MVIE.../VR

Pump curves

Wilo-Comfort-Vario COR -1 MVIE 5204/VR

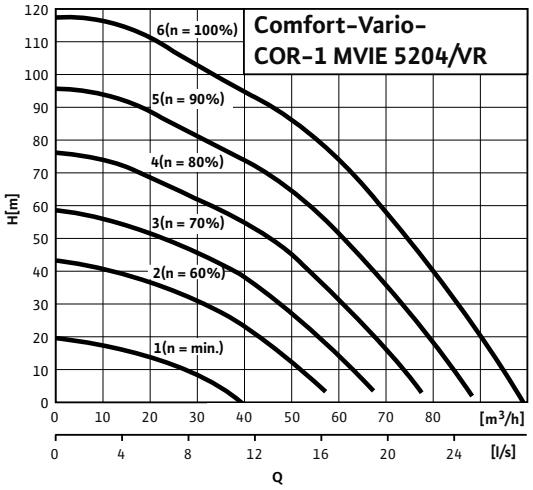

Dimension drawing

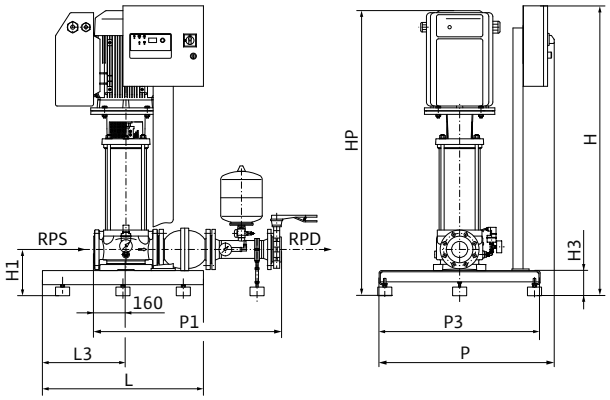

Sample systems are shown.
Accessories (to be ordered separately): Optional WMS low-water cut-out switchgear kit,
Installation surface: flat and horizontal
Installation location: dry, well ventilated and frost-proof

Motor data

Wilo Comfort-Vario COR-1...	Nominal motor power	Nominal current 3~400 V, 50 Hz	Motor efficiency		
	P_2	I_N	$\eta_{m\,50\%}$	$\eta_{m\,75\%}$	$\eta_{m\,100\%}$
	kW	A	%		
MVIE 5204/VR	18.5	33.6	89.4	90.6	91.1

Motor efficiency based on 400 V, 50 Hz

Dimensions, weights

Wilo Comfort-Vario COR-1...	Nominal diameters of the pipe connections on suction side	Nominal diameters of pipe connections on the pressure side	Dimensions									Weight approx.
	RPS	*RPD*	*H*	*H1*	*H3*	*HP*	*L*	*L3*	*P*	*P1*	*P3*	*m*
			mm									kg
MVIE 5204/VR	DN 80	DN 80	1441	230	125	1268	800	415	870	935	800	358

Pressure boosting

Single pump systems, speed-controlled

Technical data Wilo-Comfort-Vario COR-1 MVIE.../VR

Pump curves

Wilo-Comfort-Vario COR -1 MVIE 5205/VR

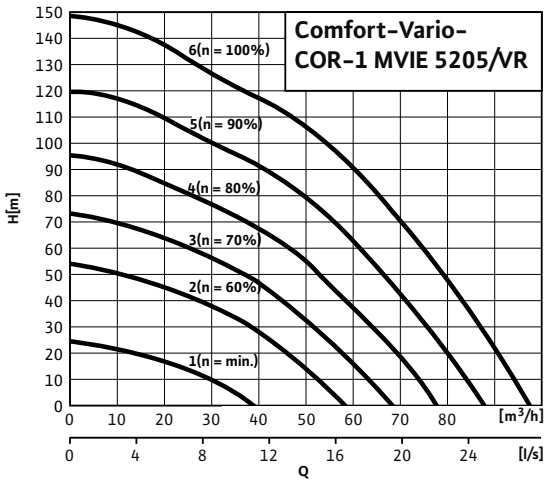

Dimension drawing

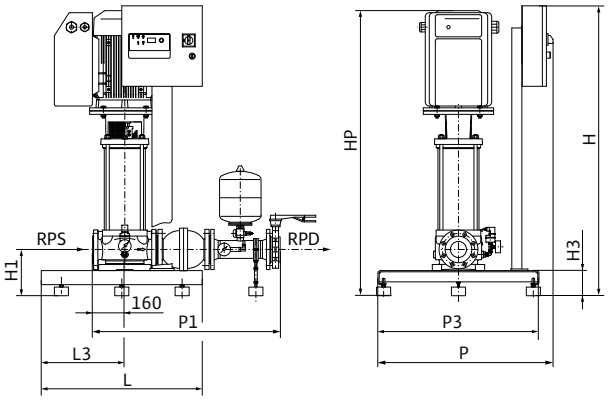

Sample systems are shown.
Accessories (to be ordered separately): Optional WMS low-water cut-out switchgear kit,
Installation surface: flat and horizontal
Installation location: dry, well ventilated and frost-proof

Motor data

Wilo Comfort-Vario COR-1...	Nominal motor power	Nominal current 3~400 V, 50 Hz	Motor efficiency		
	P_2	I_N	$\eta_{m\ 50\%}$	$\eta_{m\ 75\%}$	$\eta_{m\ 100\%}$
	kW	A	%		
MVIE 5205/VR	22	43.9	86.8	89.7	91.0

Motor efficiency based on 400 V, 50 Hz

Dimensions, weights

Wilo Comfort-Vario COR-1...	Nominal diameters of the pipe connections on suction side	Nominal diameters of pipe connections on the pressure side	Dimensions									Weight approx.
	RPS	*RPD*	*H*	*H1*	*H3*	*HP*	*L*	*L3*	*P*	*P1*	*P3*	*m*
			mm									kg
MVIE 5205/VR	DN 80	DN 80	1441	230	125	1417	800	415	870	935	800	394

Technical data Wilo-Comfort-Vario COR-1 MVIE.../VR

Pump curves

Wilo-Comfort-Vario COR -1 MVIE 7002/VR

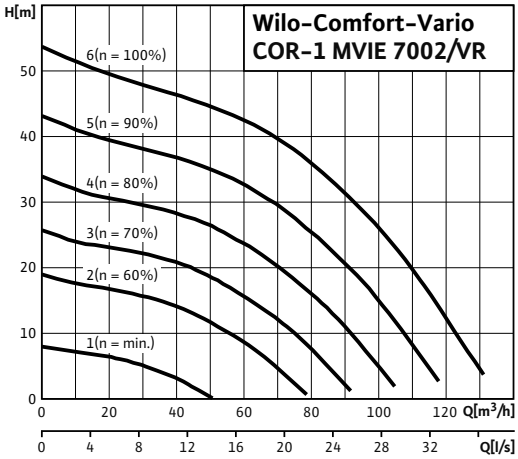

Dimension drawing

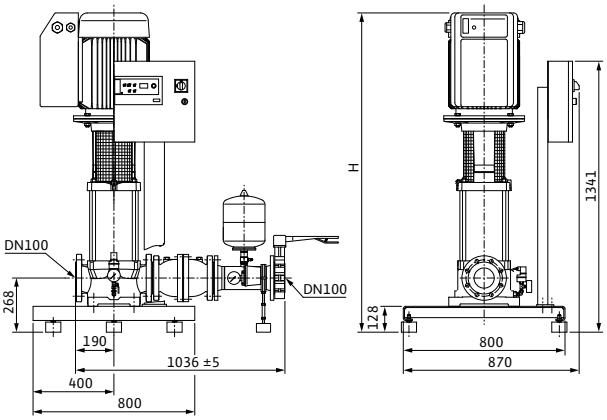

Sample systems are shown.
Accessories (to be ordered separately): Optional WMS low-water cut-out switchgear kit,
Installation surface: flat and horizontal
Installation location: dry, well ventilated and frost-proof

Motor data

Wilo Comfort-Vario COR-1...	Nominal motor power	Nominal current 3~400 V, 50 Hz	Motor efficiency		
	P_2	I_N	$\eta_{m\,50\%}$	$\eta_{m\,75\%}$	$\eta_{m\,100\%}$
	kW	A	%		
MVIE 7002/VR	11	21.2	88.8	90.2	90.5

Motor efficiency based on 400 V, 50 Hz

Dimensions, weights

Wilo Comfort-Vario COR-1...	Nominal diameters of the pipe connections on suction side	Nominal diameters of pipe connections on the pressure side	Dimensions									Weight approx.
	RPS	*RPD*	*H*	*H1*	*H3*	*HP*	*L*	*L3*	*P*	*P1*	*P3*	*m*
			mm									kg
MVIE 7002/VR	DN 100	DN 100	1341	268	128	1335	800	400	870	1036	800	348

Pressure boosting

Single pump systems, speed-controlled

Technical data Wilo-Comfort-Vario COR-1 MVIE.../VR

Pump curves

Wilo-Comfort-Vario COR -1 MVIE 7003/1/VR

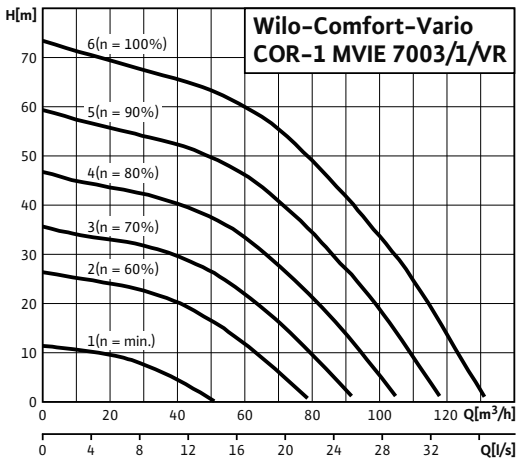

Dimension drawing

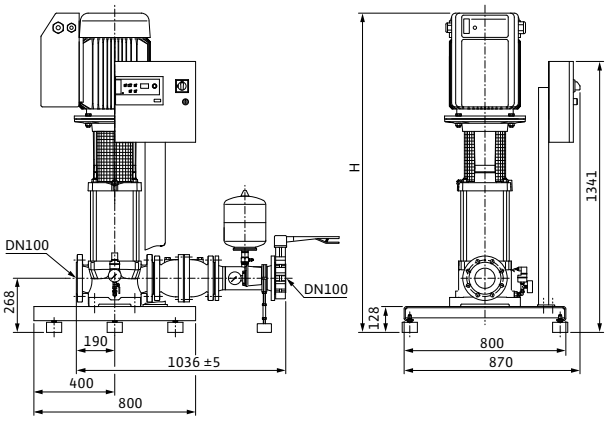

Sample systems are shown.
Accessories (to be ordered separately): Optional WMS low-water cut-out switchgear kit,
Installation surface: flat and horizontal
Installation location: dry, well ventilated and frost-proof

Motor data

Wilo Comfort-Vario COR-1...	Nominal motor power	Nominal current 3~400 V, 50 Hz	Motor efficiency		
	P_2	I_N	$\eta_{m\ 50\%}$	$\eta_{m\ 75\%}$	$\eta_{m\ 100\%}$
	kW	A	%		
MVIE 7003/1/VR	15	25.4	90.6	91.1	90.7

Motor efficiency based on 400 V, 50 Hz

Dimensions, weights

Wilo Comfort-Vario COR-1...	Nominal diameters of the pipe connections on suction side	Nominal diameters of pipe connections on the pressure side	Dimensions									Weight approx.
	RPS	*RPD*	*H*	*H1*	*H3*	*HP*	*L*	*L3*	*P*	*P1*	*P3*	*m*
			mm									kg
MVIE 7003/1/VR	DN 100	DN 100	1341	268	128	1431	800	400	870	1036	800	386

Technical data Wilo-Comfort-Vario COR-1 MVIE.../VR

Pump curves

Wilo-Comfort-Vario COR -1 MVIE 7004/2/VR

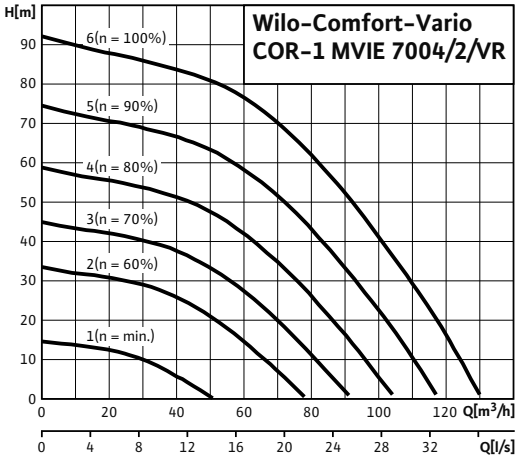

Dimension drawing

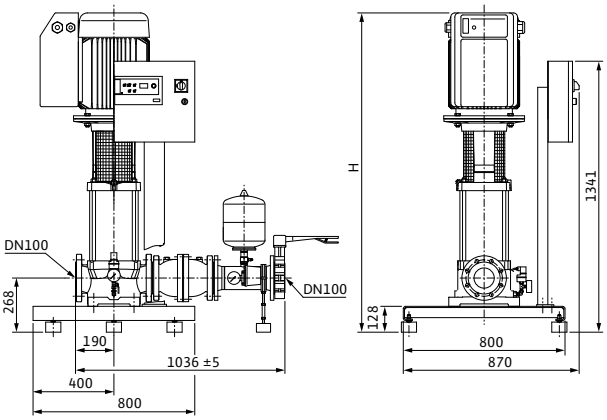

Sample systems are shown.
Accessories (to be ordered separately): Optional WMS low-water cut-out switchgear kit,
Installation surface: flat and horizontal
Installation location: dry, well ventilated and frost-proof

Motor data

Wilo Comfort-Vario COR-1...	Nominal motor power	Nominal current 3~400 V, 50 Hz	Motor efficiency		
	P_2	I_N	$\eta_{m\,50\%}$	$\eta_{m\,75\%}$	$\eta_{m\,100\%}$
	kW	A	%		
MVIE 7004/2/VR	18.5	33.6	89.4	90.6	91.1

Motor efficiency based on 400 V, 50 Hz

Dimensions, weights

Wilo Comfort-Vario COR-1...	Nominal diameters of the pipe connections on suction side	Nominal diameters of pipe connections on the pressure side	Dimensions									Weight approx.
	RPS	*RPD*	*H*	*H1*	*H3*	*HP*	*L*	*L3*	*P*	*P1*	*P3*	*m*
			mm									kg
MVIE 7004/2/VR	DN 100	DN 100	1341	268	128	1554	800	400	870	1036	800	421

Pressure boosting

Single pump systems, speed-controlled

Technical data Wilo-Comfort-Vario COR-1 MVIE.../VR

Pump curves

Wilo-Comfort-Vario COR -1 MVIE 7004/VR

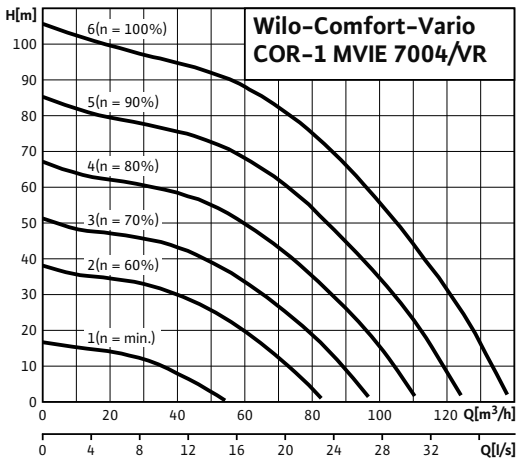

Dimension drawing

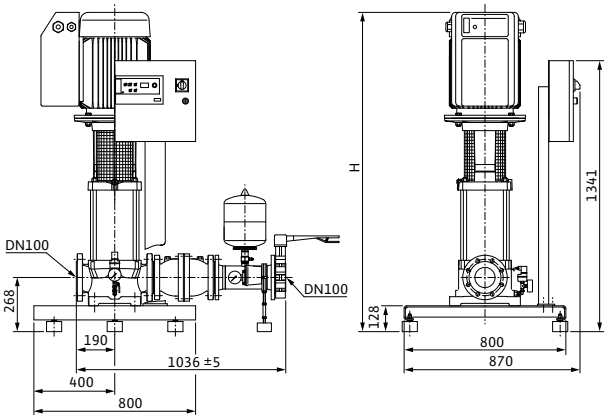

Sample systems are shown.
Accessories (to be ordered separately): Optional WMS low-water cut-out switchgear kit,
Installation surface: flat and horizontal
Installation location: dry, well ventilated and frost-proof

Motor data

Wilo Comfort-Vario COR-1...	Nominal motor power	Nominal current 3~400 V, 50 Hz	Motor efficiency		
	P_2	I_N	$\eta_{m\ 50\%}$	$\eta_{m\ 75\%}$	$\eta_{m\ 100\%}$
	kW	A	%		
MVIE 7004/VR	22	43.9	86.8	89.7	91.0

Motor efficiency based on 400 V, 50 Hz

Dimensions, weights

Wilo Comfort-Vario COR-1...	Nominal diameters of the pipe connections on suction side	Nominal diameters of pipe connections on the pressure side	Dimensions									Weight approx.
	RPS	*RPD*	*H*	*H1*	*H3*	*HP*	*L*	*L3*	*P*	*P1*	*P3*	*m*
			mm									kg
MVIE 7004/VR	DN 100	DN 100	1341	268	128	1580	800	400	870	1036	800	452

Technical data Wilo-Comfort-Vario COR-1 MVIE.../VR

Pump curves

Wilo-Comfort-Vario COR -1 MVIE 9501/VR

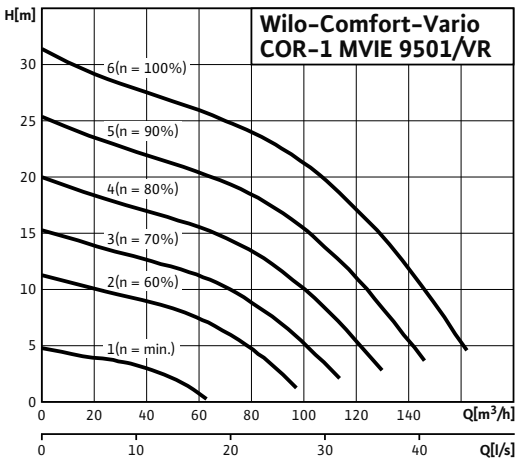

Dimension drawing

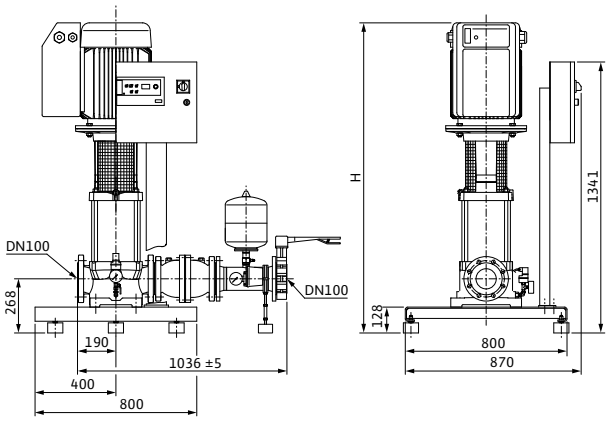

Sample systems are shown.
Accessories (to be ordered separately): Optional WMS low-water cut-out switchgear kit,
Installation surface: flat and horizontal
Installation location: dry, well ventilated and frost-proof

Motor data

Wilo Comfort-Vario COR-1...	Nominal motor power	Nominal current 3~400 V, 50 Hz	Motor efficiency		
	P_2	I_N	$\eta_{m\,50\%}$	$\eta_{m\,75\%}$	$\eta_{m\,100\%}$
	kW	A	%		
MVIE 9501/VR	11	21.2	88.8	90.2	90.5

Motor efficiency based on 400 V, 50 Hz

Dimensions, weights

Wilo Comfort-Vario COR-1...	Nominal diameters of the pipe connections on suction side	Nominal diameters of pipe connections on the pressure side	Dimensions									Weight approx.
	RPS	*RPD*	*H*	*H1*	*H3*	*HP*	*L*	*L3*	*P*	*P1*	*P3*	*m*
			mm									kg
MVIE 9501/VR	DN 100	DN 100	1341	268	128	1263	800	400	870	1036	800	344

Pressure boosting

Single pump systems, speed-controlled

Technical data Wilo-Comfort-Vario COR-1 MVIE.../VR

Pump curves

Wilo-Comfort-Vario COR -1 MVIE 9502/1/VR

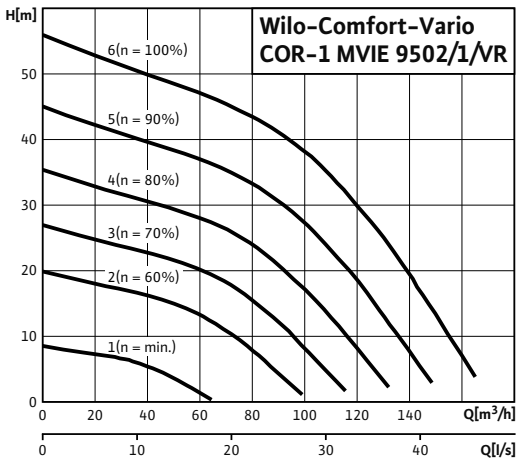

Dimension drawing

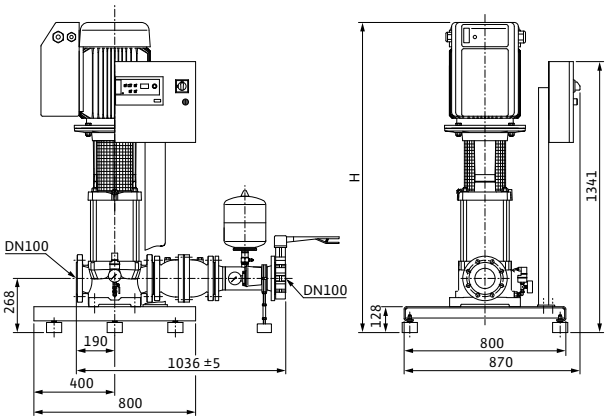

Sample systems are shown.
Accessories (to be ordered separately): Optional WMS low-water cut-out switchgear kit,
Installation surface: flat and horizontal
Installation location: dry, well ventilated and frost-proof

Motor data

Wilo Comfort-Vario COR-1...	Nominal motor power	Nominal current 3~400 V, 50 Hz	Motor efficiency		
	P_2	I_N	$\eta_{m\ 50\%}$	$\eta_{m\ 75\%}$	$\eta_{m\ 100\%}$
	kW	A	%		
MVIE 9502/1/VR	15	25.4	90.6	91.1	90.7

Motor efficiency based on 400 V, 50 Hz

Dimensions, weights

Wilo Comfort-Vario COR-1...	Nominal diameters of the pipe connections on suction side	Nominal diameters of pipe connections on the pressure side	Dimensions									Weight approx.
	RPS	*RPD*	*H*	*H1*	*H3*	*HP*	*L*	*L3*	*P*	*P1*	*P3*	*m*
			mm									kg
MVIE 9502/1/VR	DN 100	DN 100	1341	268	128	1372	800	400	870	1036	800	384

Technical data Wilo-Comfort-Vario COR-1 MVIE.../VR

Pump curves

Wilo-Comfort-Vario COR -1 MVIE 9502/VR

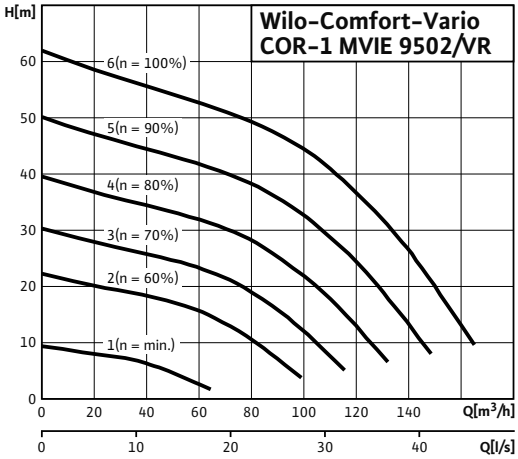

Dimension drawing

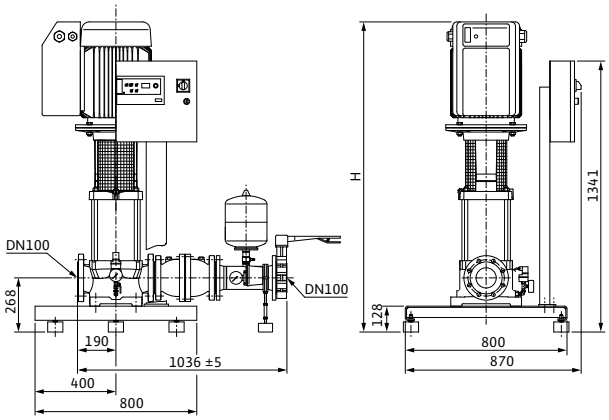

Sample systems are shown.
Accessories (to be ordered separately): Optional WMS low-water cut-out switchgear kit,
Installation surface: flat and horizontal
Installation location: dry, well ventilated and frost-proof

Motor data

Wilo Comfort-Vario COR-1...	Nominal motor power	Nominal current 3~400 V, 50 Hz	Motor efficiency		
	P_2	I_N	$\eta_{m\,50\%}$	$\eta_{m\,75\%}$	$\eta_{m\,100\%}$
	kW	A	%		
MVIE 9502/VR	18.5	33.6	89.4	90.6	91.1

Motor efficiency based on 400 V, 50 Hz

Dimensions, weights

Wilo Comfort-Vario COR-1...	Nominal diameters of the pipe connections on suction side	Nominal diameters of pipe connections on the pressure side	Dimensions									Weight approx.
	RPS	*RPD*	*H*	*H1*	*H3*	*HP*	*L*	*L3*	*P*	*P1*	*P3*	*m*
			mm									kg
MVIE 9502/VR	DN 100	DN 100	1341	268	128	1410	800	400	870	1036	800	415

Pressure boosting

Single pump systems, speed-controlled

Technical data Wilo-Comfort-Vario COR-1 MVIE.../VR

Pump curves

Wilo-Comfort-Vario COR -1 MVIE 9503/2/VR

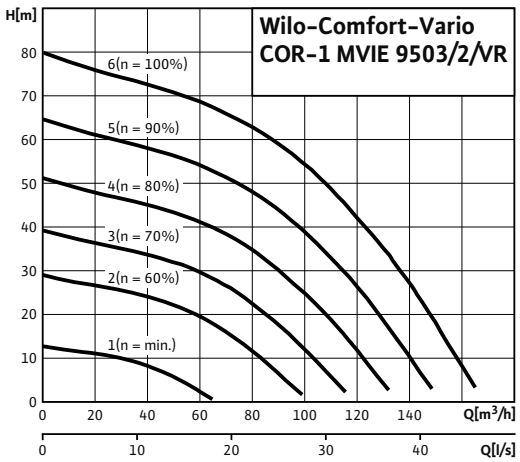

Dimension drawing

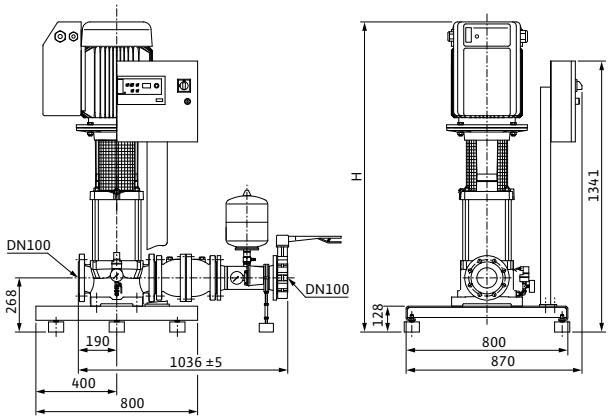

Sample systems are shown.
Accessories (to be ordered separately): Optional WMS low-water cut-out switchgear kit,
Installation surface: flat and horizontal
Installation location: dry, well ventilated and frost-proof

Motor data

Wilo Comfort-Vario COR-1...	Nominal motor power	Nominal current 3~400 V, 50 Hz	Motor efficiency		
	P_2	I_N	$\eta_{m\ 50\%}$	$\eta_{m\ 75\%}$	$\eta_{m\ 100\%}$
	kW	A	%		
MVIE 9503/2/VR	22	43.9	86.8	89.7	91.0

Motor efficiency based on 400 V, 50 Hz

Dimensions, weights

Wilo Comfort-Vario COR-1...	Nominal diameters of the pipe connections on suction side	Nominal diameters of pipe connections on the pressure side	Dimensions									Weight approx.
	RPS	*RPD*	*H*	*H1*	*H3*	*HP*	*L*	*L3*	*P*	*P1*	*P3*	*m*
			mm									kg
MVIE 9503/2/VR	DN 100	DN 100	1341	268	128	1534	800	400	870	1036	800	450

Series description Wilo-Comfort-N-Vario COR-1 MVISE...-GE

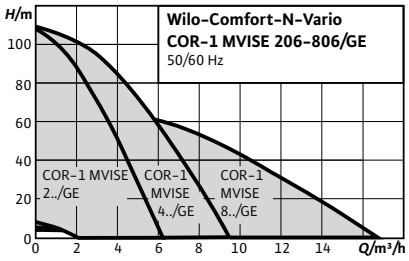

Design
Water-supply units with a non-self-priming glandless high-pressure multistage centrifugal pump and integrated speed control

Type key

Example:	**Wilo-COR-1 MVISE 206/GE**
CO	Compact pressure boosting system
R	Control by frequency converter
1	With one pump
MVISE	Pump series
2	Rated volume flow of the single pump [m^3/h]
06	Number of single-pump stages
GE	Basic unit; i.e. without additional control device

Application
- For fully automatic water supply in inlet mode, either from the public water supply network or from a tank.
- Pumping of potable water, process water, cooling water, water for fire-fighting or other water mixtures that do not chemically or mechanically attack the materials used and do not contain abrasive or long-fibre constituents

Special features/product advantages
- Virtually noiseless system through the use of a glandless stainless steel high-pressure multistage centrifugal pumps with integrated frequency converter
- Up to 20 dB[A] quieter than conventional systems with comparable hydraulic output
- Easily adjustable and operationally reliable due to the MVISE pump series used, with integrated dry-running detection and automatic deactivation in the event of low water

Technical data
- Mains connection 3~400 V, 50 Hz
- Fluid temperature max. 50 °C
- Operating pressure 16 bar
- Inlet pressure 6 bar
- Nominal connection diameters Rp 1¼ - Rp 1½
- Protection class IP 44

Equipment/function
- 1 MVISE series pump with glandless pump motor and infinitely variable control mode via integrated frequency converter
- All components in contact with the fluid are corrosion-resistant
- Base frame made of galvanised 1.4301 stainless steel, with height-adjustable vibration absorbers for insulation against structure-borne noise
- Check valve, pressure side
- Non-return valve, pressure side
- Diaphragm pressure vessel 8 l, PN16

Materials
- Foot 1.4301 stainless steel
- Impellers 1.4301 stainless steel
- Stage chambers 1.4301 stainless steel
- Pressure shroud 1.4301 stainless steel
- Shaft 1.4122 stainless steel
- Bearing/mechanical seal made of carbon, resin-impregnated
- Pipework made of 1.4571 stainless steel

Description/design
- Base frame: 1.4301 stainless steel with height-adjustable vibration dampers for comprehensive insulation against structure-borne noise
- Pipework: Complete pressure-side pipework made of 1.4571 stainless steel, suitable for connection of all commonly used piping materials; the pipework is sized corresponding to the overall hydraulic performance of the pressure boosting system
- Pumps: 1 pump is used from each of the series MVISE 2.., 4.. or 8..; adapted frequency converter on the pump motor enables infinitely variable control mode for all pumps of these series; all pump components in contact with fluid are made of 1.4301 stainless steel
- Fittings: Each pump is fitted on the pressure side with a DVGW-tested, Ni-coated, CuZn gear-operated shut-off ball fitting and a DVGW-approved POM non-return valve in a CuZu housing
- Diaphragm pressure vessel: 8 l/PN 16 located on the discharge side with a butyl rubber diaphragm, completely safe in accordance with food safety laws; complete with Ni-coated CuZn shut-off ball cock for tests and inspections, with drain and throughflow fitting in accordance with DIN 4807

Scope of delivery
- Factory-mounted, connection-ready pressure boosting system checked for functionality and impermeability
- Packaging
- Installation and operating instructions

Series description Wilo-Comfort-N-Vario COR-1 MVISE...-GE

Note

Function description (version COR-1 .../VR)

Function description

The Wilo Comfort-Vario pressure boosting system is controlled and monitored by means of the Comfort-Vario-Controller in conjunction with various pressure sensors. The pump belonging to the system is switched on and off as per pressure fluctuations within the control range to meet water requirements.
The authorised control range is up to a setpoint of 5.0 bar +/- 0.1 bar. For setpoints greater than 5.0 bar, the authorised control range amounts to +/- 2% of the preset setpoint value. The precondition here is that the rate of volume flow change during water extraction does not exceed the pump control rate. Ramp time for the frequency converter is 1 second in each case.

Activation of the duty pump

The duty pump is activated immediately if the system pressure drops below the preset setpoint pressure value. The pump is steplessly adjusted within its output range (between 0 and maximum volume flow) to the load status of the system by the integrated frequency converter within the control range. Pumps of the MVIE can be speed-controlled within a frequency range of 25 Hz up to a maximum of 60 Hz.

Zero-flow test and deactivation of duty pump

In order to prevent the system hunting and the pressure fluctuations associated with that, the Comfort-Vario-Controller deactivates the entire system only when there really is no more water being extracted.
The preconditions for this state are established by the zero-flow test as carried out by the Comfort-Vario-Controller.

The minimum requirements are that the system pressure and the speed of the base-load pump have remained constant for a specific, parameterisable timeframe.
The zero-flow test is initiated and performed by the Comfort Vario controller if these requirements are satisfied. The test involves increasing the setpoint pressure value by 0.1 bar (with setpoint pressure values ≤ 5.0 bar) for 60 seconds. With setpoint pressure values > 5.0 bar, the increase is 2% of the nominal value. After that the setpoint is set back to its original level. If, during that time, the actual system pressure remains at the raised setpoint level, the pressure boosting system is deactivated as water is no longer being drawn off. However, if the actual pressure drops by a minimum of 0.1 bar relative to the increased setpoint level, the base-load pump continues to operate as water is still being drawn off.

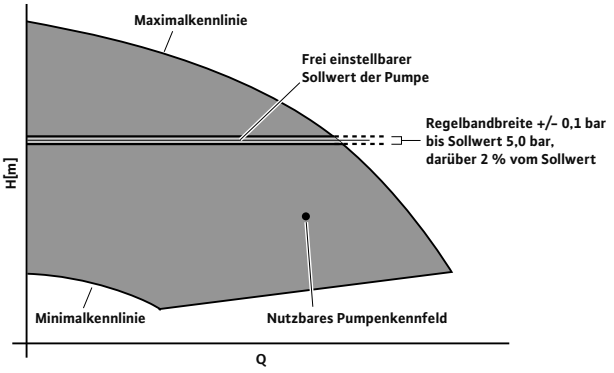

Electrical connection

3~400 V; 1.1-2 kW

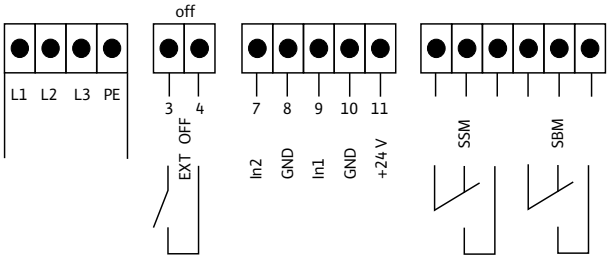

Optional main switch, optional pressure switch kit for low-water cut-out (switches pump via ext. I/O)

Technical data Wilo-Comfort-N-Vario COR-1 MVISE...-GE

Pump curves

Wilo-Comfort-N-Vario COR -1-MVISE 206-GE

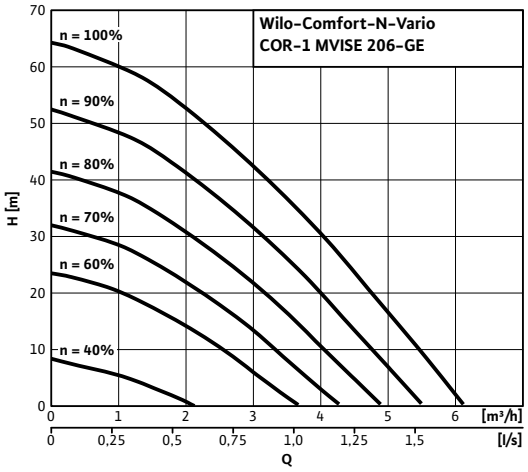

Dimension drawing

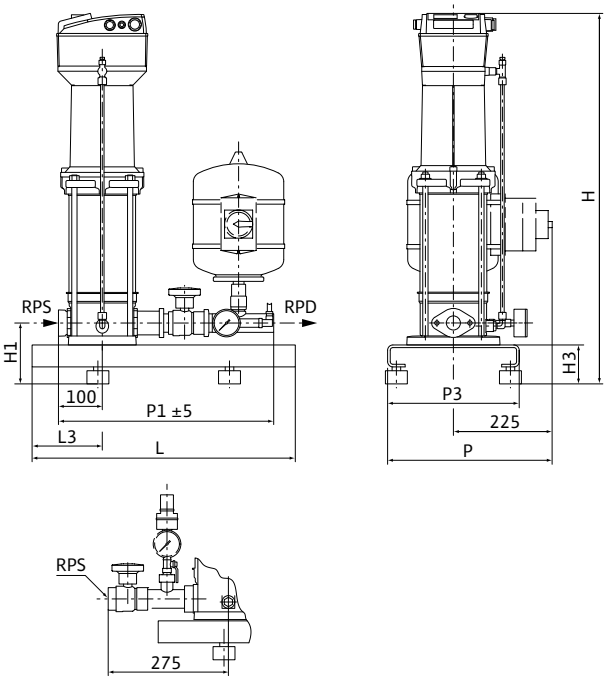

Sample systems are shown.
Accessories (to be ordered separately): Optional WMS low-water cut-out switchgear kit, main switch
Installation surface: flat and horizontal
Installation location: dry, well ventilated and frost-proof

Motor data

Wilo-Comfort-N-Vario COR-1...	Power consumption	Nominal motor power	Nominal current 3~400 V, 50 Hz
	P_1	P_2	I_N
	kW		A
MVISE 206-GE	1.42	1.1	4.2

Dimensions, weights

Wilo-Comfort-N-Vario COR-1...	Nominal diameters of the pipe connections on suction side	Nominal diameters of pipe connections on the pressure side	Dimensions									Weight approx.
	RPS	*RPD*	*H*	*H1*	*H3*	*HP*	*L*	*L3*	*P*	*P1*	*P3*	*m*
			mm									kg
MVISE 206-GE	Rp 1¼	R 1¼	720	140	90	720	600	160	375	490	300	52

Pressure boosting

Single pump systems, speed-controlled

Technical data Wilo-Comfort-N-Vario COR-1 MVISE...-GE

Pump curves

Wilo-Comfort-N-Vario COR -1-MVISE 210-GE

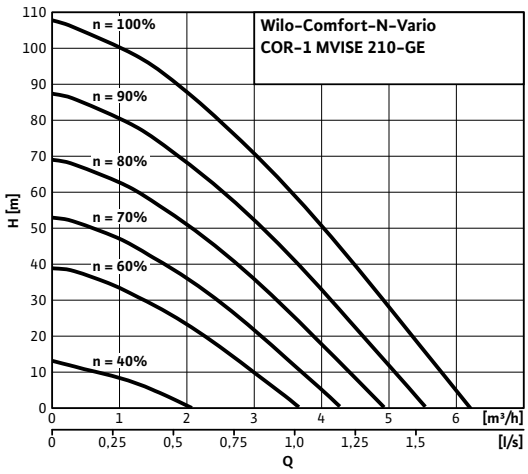

Dimension drawing

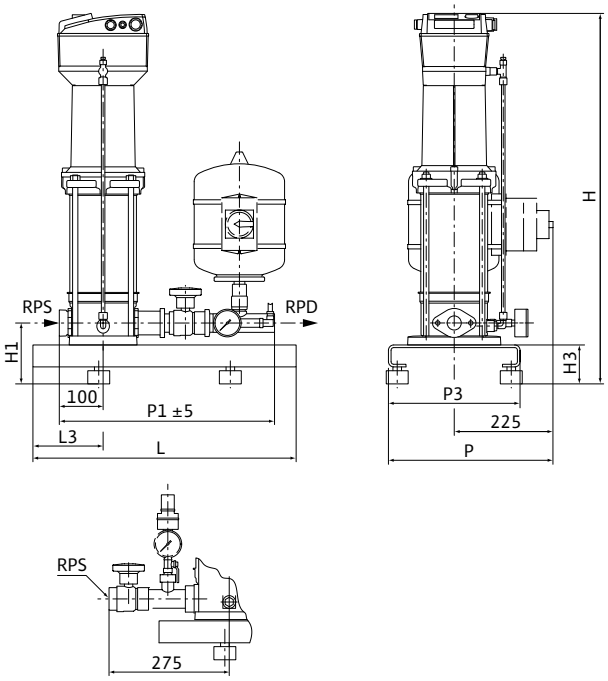

Sample systems are shown.
Accessories (to be ordered separately): Optional WMS low-water cut-out switchgear kit, main switch
Installation surface: flat and horizontal
Installation location: dry, well ventilated and frost-proof

Motor data

Wilo-Comfort-N-Vario COR-1...	Power consumption	Nominal motor power	Nominal current 3~400 V, 50 Hz
	P_1	P_2	I_N
	kW		A
MVISE 210-GE	2.28	2.2	6.5

Dimensions, weights

Wilo-Comfort-N-Vario COR-1...	Nominal diameters of the pipe connections on suction side	Nominal diameters of pipe connections on the pressure side	Dimensions									Weight approx.
	RPS	*RPD*	*H*	*H1*	*H3*	*HP*	*L*	*L3*	*P*	*P1*	*P3*	*m*
			mm									kg
MVISE 210-GE	Rp 1¼	R 1¼	846	140	90	846	600	160	375	490	300	58

Technical data Wilo-Comfort-N-Vario COR-1 MVISE...-GE

Pump curves

Wilo-Comfort-N-Vario COR -1-MVISE 404-GE

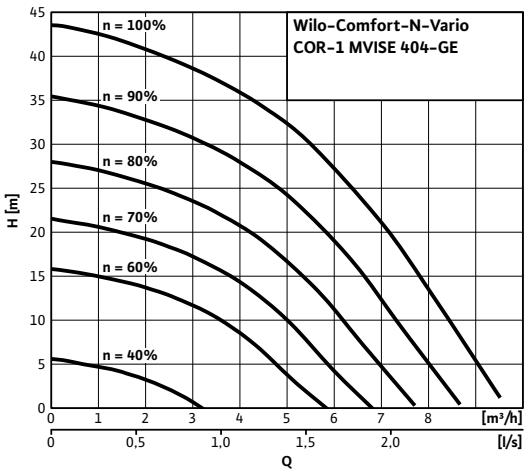

Dimension drawing

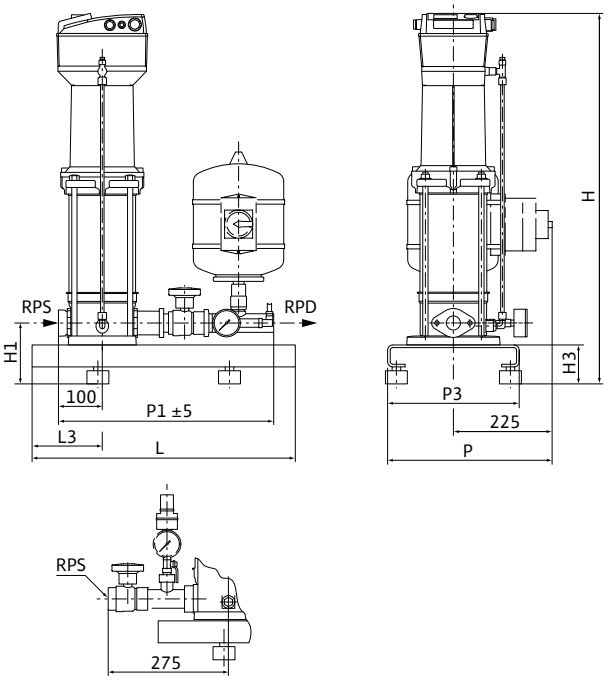

Sample systems are shown.
Accessories (to be ordered separately): Optional WMS low-water cut-out switchgear kit, main switch
Installation surface: flat and horizontal
Installation location: dry, well ventilated and frost-proof

Motor data

Wilo-Comfort-N-Vario COR-1...	Power consumption	Nominal motor power	Nominal current 3~400 V, 50 Hz
	P_1	P_2	I_N
	kW		A
MVISE 404-GE	1.4	1.1	4.2

Dimensions, weights

Wilo-Comfort-N-Vario COR-1...	Nominal diameters of the pipe connections on suction side	Nominal diameters of pipe connections on the pressure side	Dimensions									Weight approx.
	RPS	*RPD*	*H*	*H1*	*H3*	*HP*	*L*	*L3*	*P*	*P1*	*P3*	*m*
			mm									kg
MVISE 404-GE	Rp 1¼	R 1¼	672	140	90	672	600	160	375	490	300	51

Pressure boosting

Single pump systems, speed-controlled

Technical data Wilo-Comfort-N-Vario COR-1 MVISE...-GE

Pump curves

Wilo-Comfort-N-Vario COR -1-MVISE 406-GE

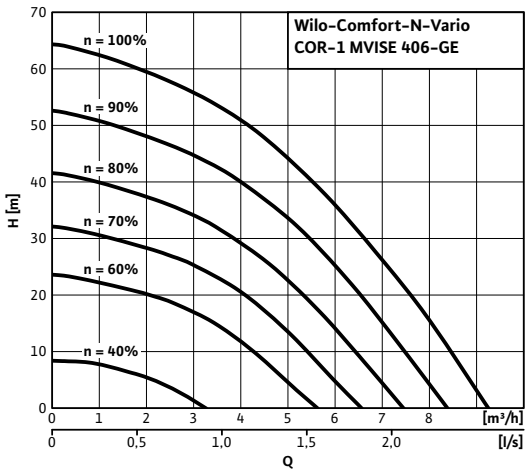

Dimension drawing

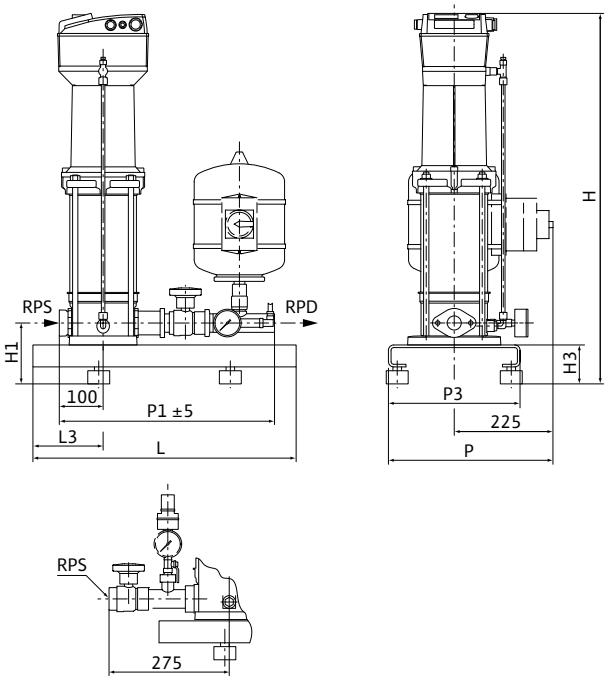

Sample systems are shown.
Accessories (to be ordered separately): Optional WMS low-water cut-out switchgear kit, main switch
Installation surface: flat and horizontal
Installation location: dry, well ventilated and frost-proof

Motor data

Wilo-Comfort-N-Vario COR-1...	Power consumption	Nominal motor power	Nominal current 3~400 V, 50 Hz
	P_1	P_2	I_N
	kW		A
MVISE 406-GE	1.84	1.1	4.2

Dimensions, weights

Wilo-Comfort-N-Vario COR-1...	Nominal diameters of the pipe connections on suction side	Nominal diameters of pipe connections on the pressure side	Dimensions									Weight approx.
	RPS	*RPD*	*H*	*H1*	*H3*	*HP*	*L*	*L3*	*P*	*P1*	*P3*	*m*
			mm									kg
MVISE 406-GE	Rp 1¼	R 1¼	720	140	90	720	600	160	375	490	300	52

Technical data Wilo-Comfort-N-Vario COR-1 MVISE...-GE

Pump curves

Wilo-Comfort-N-Vario COR -1-MVISE 410-GE

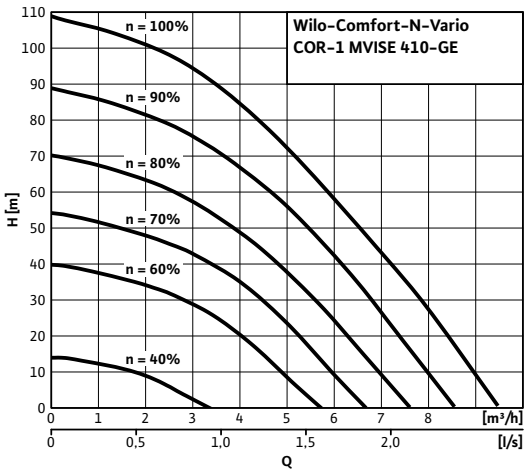

Dimension drawing

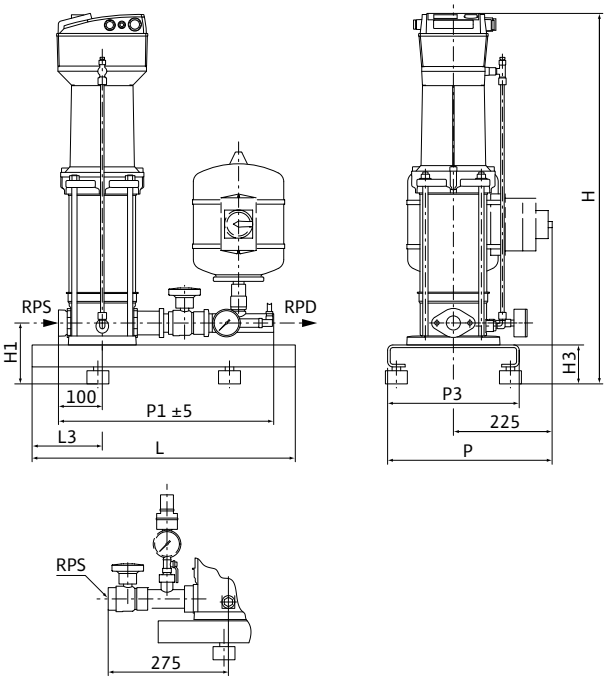

Sample systems are shown.
Accessories (to be ordered separately): Optional WMS low-water cut-out switchgear kit, main switch
Installation surface: flat and horizontal
Installation location: dry, well ventilated and frost-proof

Motor data

Wilo-Comfort-N-Vario COR-1...	Power consumption	Nominal motor power	Nominal current 3~400 V, 50 Hz
	P_1	P_2	I_N
	kW		A
MVISE 410-GE	2.95	2.2	6.5

Dimensions, weights

Wilo-Comfort-N-Vario COR-1...	Nominal diameters of the pipe connections on suction side	Nominal diameters of pipe connections on the pressure side	Dimensions									Weight approx.
	RPS	*RPD*	*H*	*H1*	*H3*	*HP*	*L*	*L3*	*P*	*P1*	*P3*	*m*
			mm									kg
MVISE 410-GE	Rp 1¼	R 1¼	846	140	90	846	600	160	375	490	300	59

Technical data Wilo-Comfort-N-Vario COR-1 MVISE...-GE

Pump curves

Wilo-Comfort-N-Vario COR -1-MVISE 803-GE

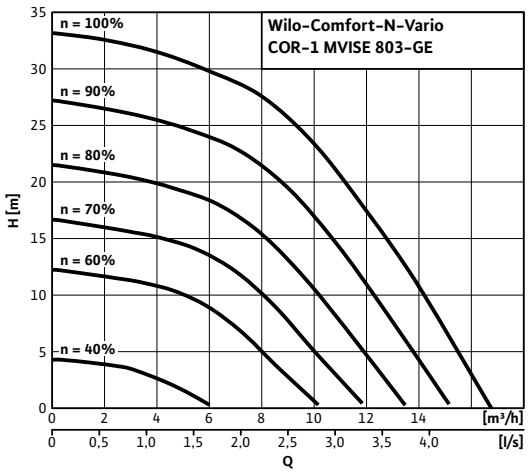

Dimension drawing

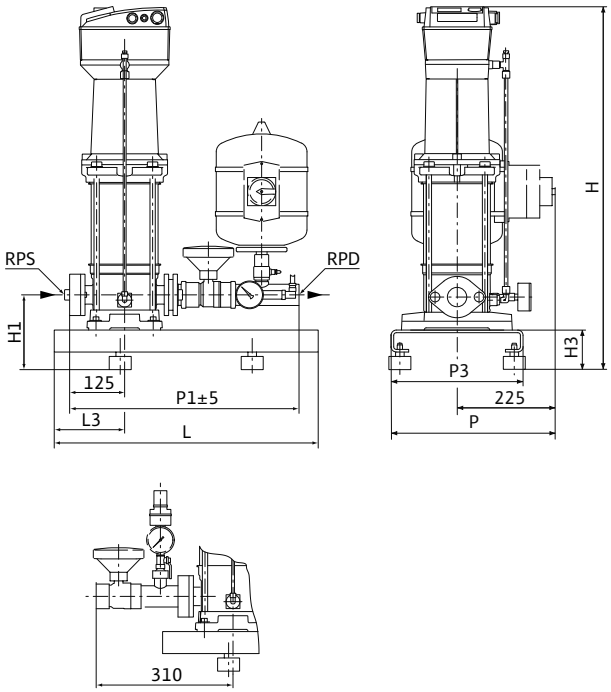

Sample systems are shown.
Accessories (to be ordered separately): Optional WMS low-water cut-out switchgear kit, main switch
Installation surface: flat and horizontal
Installation location: dry, well ventilated and frost-proof

Motor data

Wilo-Comfort-N-Vario COR-1...	Power consumption	Nominal motor power	Nominal current 3~400 V, 50 Hz
	P_1	P_2	I_N
	kW		A
MVISE 803-GE	1.8	1.1	4.2

Dimensions, weights

Wilo-Comfort-N-Vario COR-1...	Nominal diameters of the pipe connections on suction side	Nominal diameters of pipe connections on the pressure side	Dimensions									Weight approx.
	RPS	*RPD*	*H*	*H1*	*H3*	*HP*	*L*	*L3*	*P*	*P1*	*P3*	*m*
			mm									kg
MVISE 803-GE	Rp 1½	R 1½	705	170	90	705	600	160	375	525	300	55

Technical data Wilo-Comfort-N-Vario COR-1 MVISE...-GE

Pump curves

Wilo-Comfort-N-Vario COR -1-MVISE 806-GE

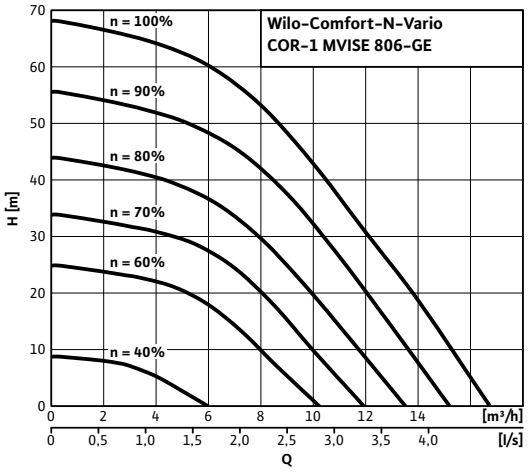

Dimension drawing

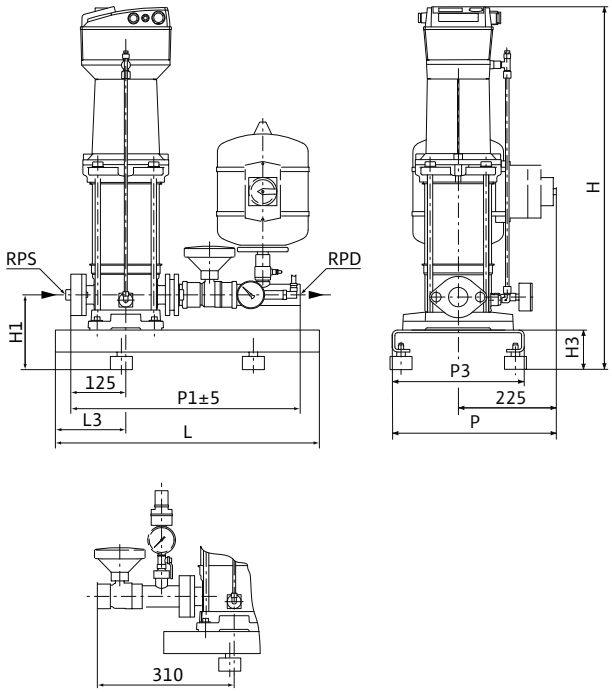

Sample systems are shown.
Accessories (to be ordered separately): Optional WMS low-water cut-out switchgear kit, main switch
Installation surface: flat and horizontal
Installation location: dry, well ventilated and frost-proof

Motor data

Wilo-Comfort-N-Vario COR-1...	Power consumption	Nominal motor power	Nominal current 3~400 V, 50 Hz
	P_1	P_2	I_N
	kW		A
MVISE 806-GE	2.93	2.2	6.5

Dimensions, weights

Wilo-Comfort-N-Vario COR-1...	Nominal diameters of the pipe connections on suction side	Nominal diameters of pipe connections on the pressure side	Dimensions									Weight approx.
	RPS	*RPD*	*H*	*H1*	*H3*	*HP*	*L*	*L3*	*P*	*P1*	*P3*	*m*
			mm									kg
MVISE 806-GE	Rp 1½	R 1½	825	170	90	825	600	160	375	525	300	61

Pressure boosting

Single pump systems, speed-controlled

Series description Wilo-Comfort-Vario COR-1 MHIE...-GE

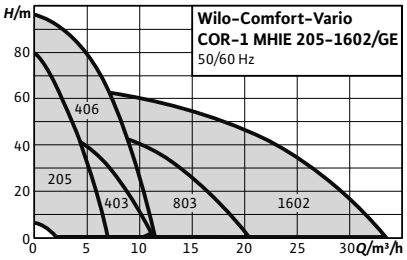

Design

Water-supply unit with a non-self-priming high-pressure multistage centrifugal pump and integrated speed control

Type key

Example:	**Wilo-COR-1 MHIE 205/GE**
CO	Compact pressure boosting system
R	Control by frequency converter
1	With one pump
MHIE	Pump series
2	Nominal volume flow of the single pump [m^3/h]
05	Number of single-pump stages
GE	GrundEinheit (basic unit); in other words, without an additional control device

Application

- For fully automatic water supply in inlet mode, either from the public water supply network or from a tank.
- Pumping of potable water, process water, cooling water, water for fire-fighting or other water mixtures that do not chemically or mechanically attack the materials used and do not contain abrasive or long-fibre constituents

Special features/product advantages

- Heavy-duty system due to MHIE series stainless steel high-pressure multistage centrifugal pumps with air-cooled integrated frequency converter
- Superproportionally large control range of the frequency converter
- Integrated full motor protection via PTC
- Integrated dry-running detection with automatic deactivation in the event of low water via performance characteristics of the motor control electronics

Technical data

- Mains connection 3~400 V ± 10 %, 50 Hz; 3~380/440 V ±10 %, 60 Hz or, depending on type, also 1~230 V ± 10 %, 50/60 Hz
- Max. fluid temperature 50 °C (70 °C optional)
- Max. ambient temperature 40 °C
- Operating pressure 10 bar
- Inlet pressure 6 bar
- Nominal connection diameters on inlet side Rp 1" - Rp 2"
- Nominal connection diameters on discharge side R 1¼" - R 1½"
- Speed range 1160 - 3500 rpm
- Protection class IP 54
- Fuse protection on mains side [AC 3] according to motor power and EVU regulations
- Approved fluids (other fluids on request):
  - Pure water without settling sediments
  - Process water, cold water, cooling water and rainwater
  - Potable water

Equipment/function

- 1 MHIE series pump with infinitely variable control mode via integrated frequency converter
- All components in contact with the fluid are corrosion-resistant
- Check valve, pressure side
- Non-return valve, pressure side
- Diaphragm pressure vessel 8 l, PN16

Materials

- Impellers 1.4301/1.4404 stainless steel
- Stage chambers 1.4301/1.4404 stainless steel
- Pump housing made of 1.4301/1.4404 stainless steel
- Shaft 1.4301/1.4404 stainless steel
- Gasket EPDM (EP 851) / FKM (Viton)
- Housing cover made of 1.4301/1.4404 stainless steel
- Housing bottom 1.4404 stainless steel
- Mechanical seal B-carbon/tungsten carbide, SiC/carbon
- Pressure shroud 1.4301/1.4404 stainless steel
- Bearing, tungsten carbide
- Pump base aluminium
- Pipework made of 1.4571 stainless steel

Description/design

- Base frame: Stainless steel with height-adjustable vibration absorbers for comprehensive insulation against structure-borne noise
- Pipework: complete pressure-side pipework made of stainless steel, suitable for the connection of all piping materials used in building services; the pipework is dimensioned according to the overall hydraulic performance of the pressure boosting system
- Pumps: 1 pump from the series MHIE 2.., 4.., 8.. or 16.. (up to max. motor power of 2.2 kW) is used; the adapted, air-cooled frequency converter on the pump motor enables continuous auto control between 25 Hz and a maximum of 60 Hz for all pumps of these series; all pump components in contact with fluid are made of stainless steel
- Valves: the pump is fitted on the pressure side with a check valve with DVGW approval mark and a DVGW-approved non-return valve

Series description Wilo-Comfort-Vario COR-1 MHIE...-GE

- Diaphragm pressure vessel: 8 l/PN 16 located on the discharge side with a butyl rubber diaphragm, completely safe in accordance with food safety laws; for testing and inspection purposes, with shut-off ball cock, with drain and throughflow fitting according to DIN 4807

Scope of delivery

- Factory-mounted, connection-ready pressure boosting system checked for functionality and impermeability
- Packaging
- Installation and operating instructions

Electrical connection

1~230 V

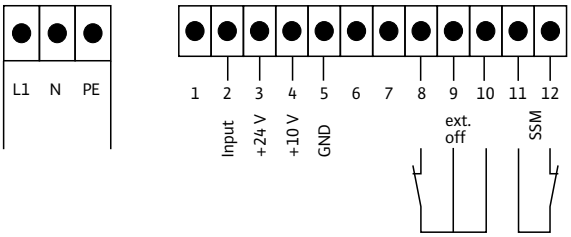

Optional main switch
Optional pressure-switch kit for low-water cut-out (switches pump by Ext. I/O)

Electrical connection

3~400 V, 1,1-4 kW

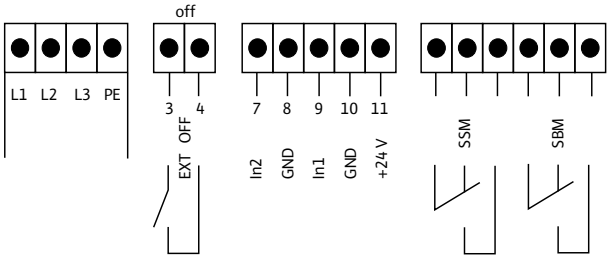

Optional main switch, optional pressure switch kit for low-water cut-out (switches pump via ext. I/O)

Pressure boosting

Single pump systems, speed-controlled

Technical data Wilo-Comfort-Vario COR-1 MHIE...-GE

Pump curves

Wilo-Comfort-Vario COR-1 MHIE 205 EM-GE

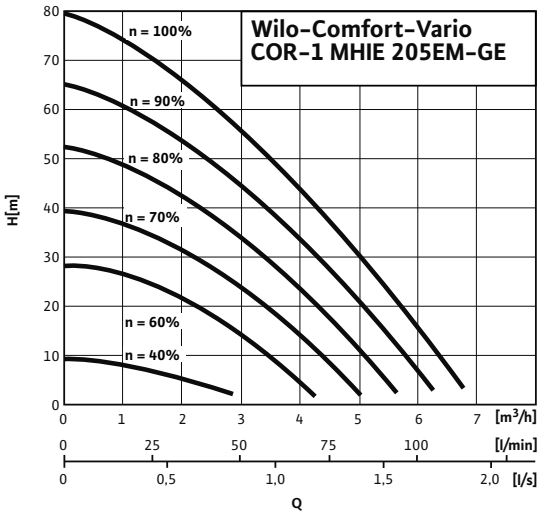

Dimension drawing

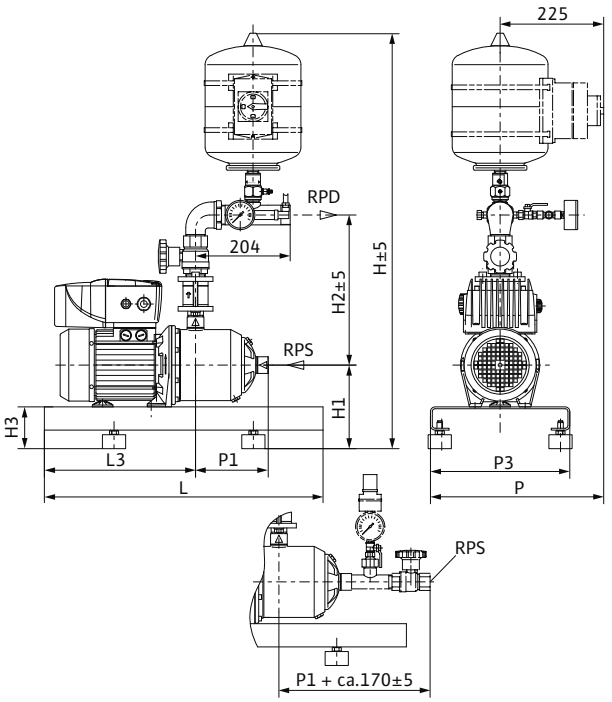

Sample systems are shown.
Accessories (to be ordered separately): Optional WMS low-water cut-out switchgear kit, main switch
Installation surface: flat and horizontal
Installation location: dry, well ventilated and frost-proof

Motor data		
Wilo-Comfort-Vario COR-1...	**Nominal motor power**	**Nominal current 1~230 V, 50 Hz**
	P_2	I_N
	kW	A
MHIE 205 EM-GE	1.1	14.1

Dimensions, weights											
Wilo-Comfort-Vario COR-1...	**Nominal diameters of the pipe connections on suction side**	**Nominal diameters of pipe connections on the pressure side**	**Dimensions**								**Weight approx.**
	RPS	*RPD*	*H*	*H1*	*H3*	*L*	*L3*	*P*	*P1*	*P3*	*m*
			mm								kg
MHIE 205 EM-GE	Rp 1	R 1¼	895	190	90	600	326	375	158	300	38.5

Technical data Wilo-Comfort-Vario COR-1 MHIE...-GE

Pump curves

Wilo-Comfort-Vario COR-1 MHIE 403 EM-GE

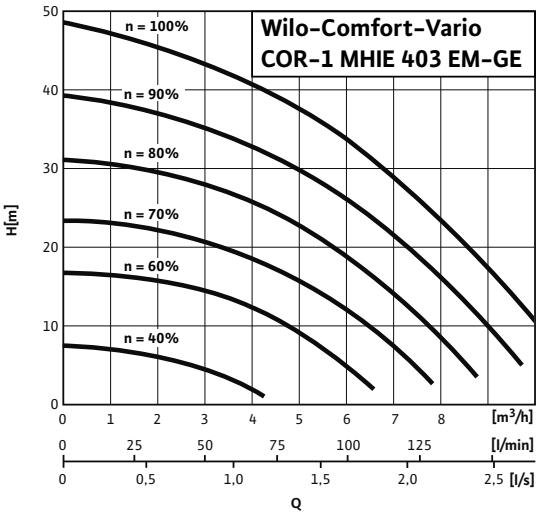

Dimension drawing

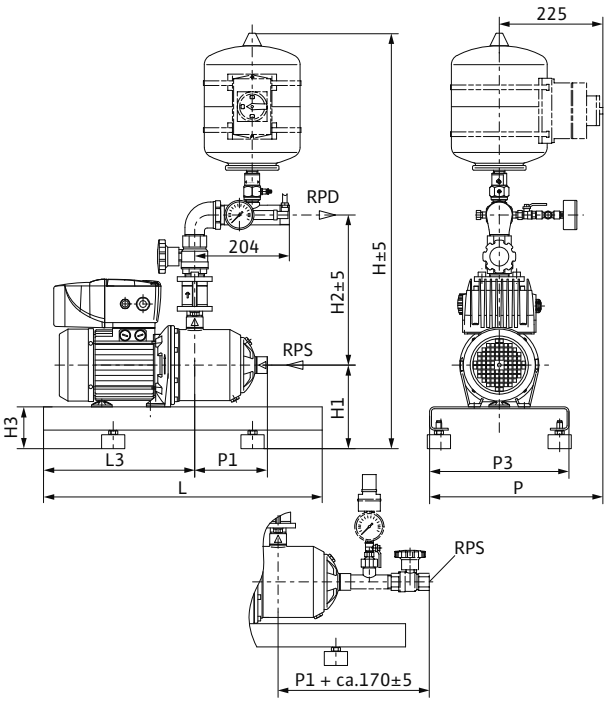

Sample systems are shown.
Accessories (to be ordered separately): Optional WMS low-water cut-out switchgear kit, main switch
Installation surface: flat and horizontal
Installation location: dry, well ventilated and frost-proof

Motor data

Wilo-Comfort-Vario COR-1...	Nominal motor power	Nominal current 1~230 V, 50 Hz
	P_2	I_N
	kW	A
MHIE 403 EM-GE	1.1	12.7

Dimensions, weights

Wilo-Comfort-Vario COR-1...	Nominal diameters of the pipe connections on suction side	Nominal diameters of pipe connections on the pressure side	Dimensions								Weight approx.
	RPS	*RPD*	*H*	*H1*	*H3*	*L*	*L3*	*P*	*P1*	*P3*	*m*
			mm								kg
MHIE 403 EM-GE	Rp 1¼	Rp 1¼	895	180	90	600	326	375	110	300	37

Technical data Wilo-Comfort-Vario COR-1 MHIE...-GE

Pump curves

Wilo-Comfort-Vario COR-1 MHIE 205-2G-GE

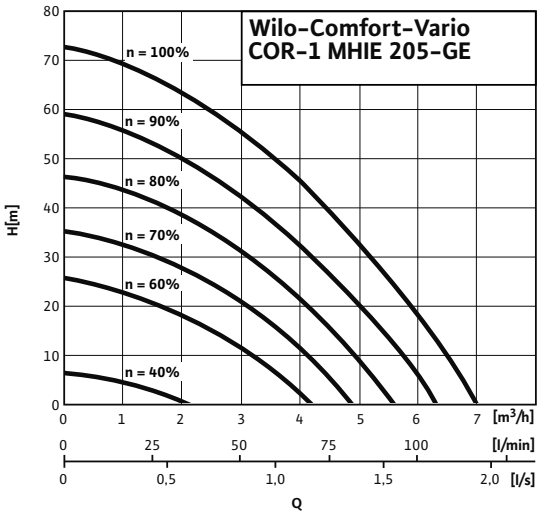

Dimension drawing

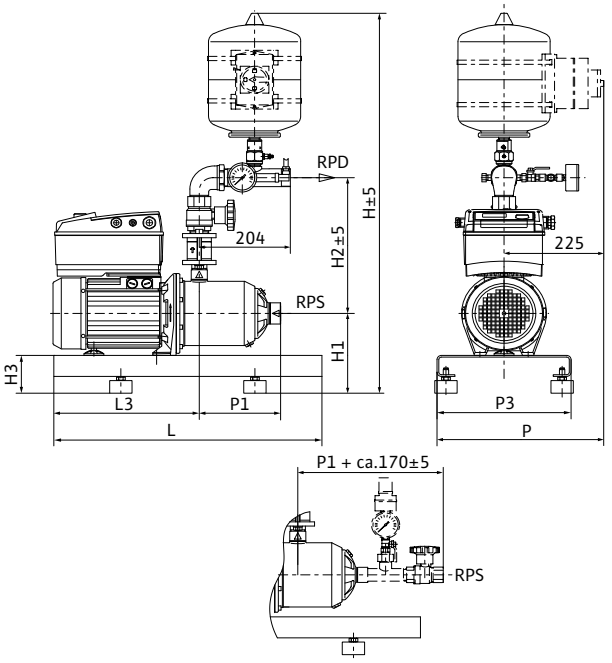

Sample systems are shown.
Accessories (to be ordered separately): Optional WMS low-water cut-out switchgear kit, main switch
Installation surface: flat and horizontal
Installation location: dry, well ventilated and frost-proof

Motor data

Wilo-Comfort-Vario COR-1...	Nominal motor power	Nominal current 3~400 V, 50 Hz	Motor efficiency		
	P_2	I_N	$\eta_{m\ 50\%}$	$\eta_{m\ 75\%}$	$\eta_{m\ 100\%}$
	kW	A	%		
MHIE 205-GE	1.1	3.3	79.0	82.0	82.5

Motor efficiency based on 400 V, 50 Hz

Dimensions, weights

Wilo-Comfort-Vario COR-1...	Nominal diameters of the pipe connections on suction side	Nominal diameters of pipe connections on the pressure side	Dimensions								Weight approx.
	RPS	*RPD*	*H*	*H1*	*H3*	*L*	*L3*	*P*	*P1*	*P3*	*m*
			mm								kg
MHIE 205-GE	Rp 1	R 1¼	895	180	90	600	326	375	158	300	33.5

Technical data Wilo-Comfort-Vario COR-1 MHIE...-GE

Pump curves

Wilo-Comfort-Vario COR-1 MHIE 403-2G-GE

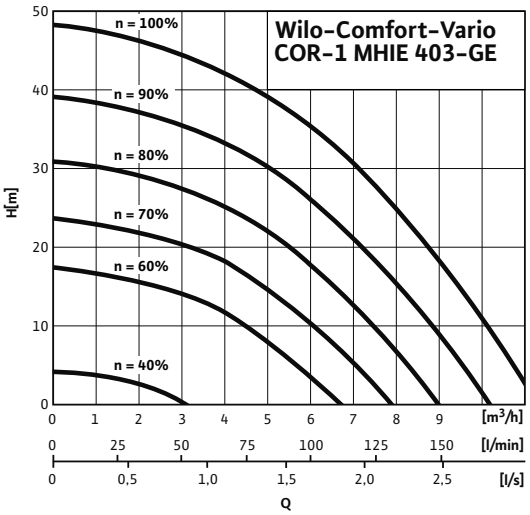

Dimension drawing

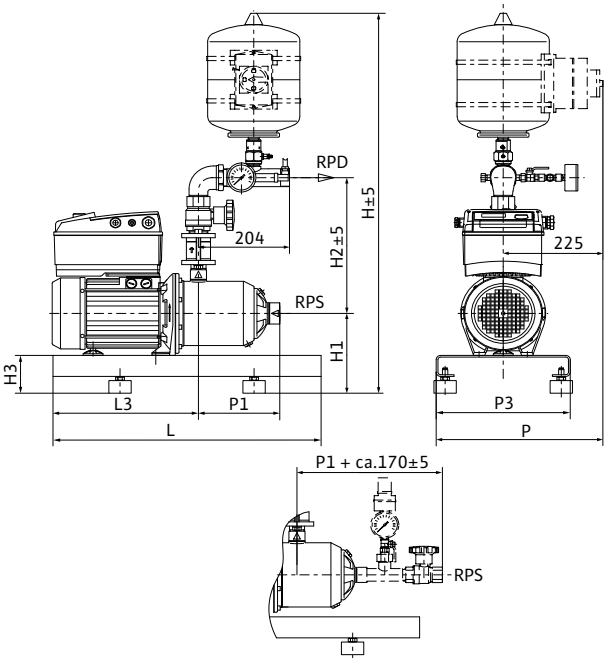

Sample systems are shown.
Accessories (to be ordered separately): Optional WMS low-water cut-out switchgear kit, main switch
Installation surface: flat and horizontal
Installation location: dry, well ventilated and frost-proof

Motor data

Wilo-Comfort-Vario COR-1...	Nominal motor power	Nominal current 3~400 V, 50 Hz	Motor efficiency		
	P_2	I_N	$\eta_{m\,50\%}$	$\eta_{m\,75\%}$	$\eta_{m\,100\%}$
	kW	A	%		
MHIE 403-GE	1.1	3.3	79.0	82.0	82.5

Motor efficiency based on 400 V, 50 Hz

Dimensions, weights

Wilo-Comfort-Vario COR-1...	Nominal diameters of the pipe connections on suction side	Nominal diameters of pipe connections on the pressure side	Dimensions								Weight approx.
	RPS	*RPD*	*H*	*H1*	*H3*	*L*	*L3*	*P*	*P1*	*P3*	*m*
			mm								kg
MHIE 403-GE	Rp 1¼	Rp 1¼	895	180	90	600	326	375	110	300	35.5

Technical data Wilo-Comfort-Vario COR-1 MHIE...-GE

Pump curves

Wilo-Comfort-Vario COR-1 MHIE 406-2G-GE

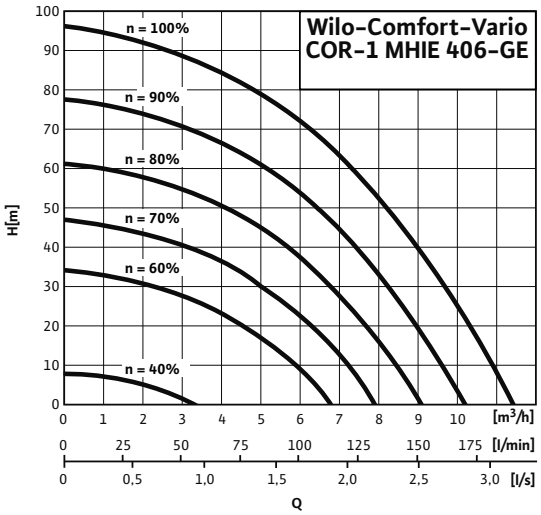

Dimension drawing

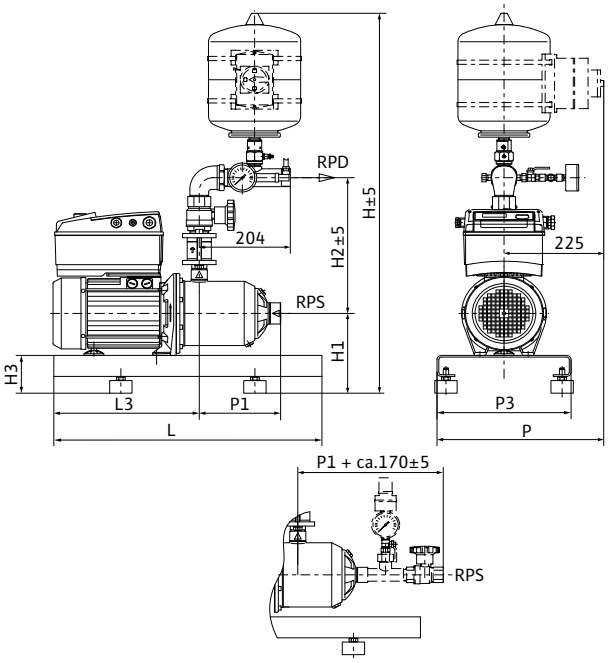

Sample systems are shown.
Accessories (to be ordered separately): Optional WMS low-water cut-out switchgear kit, main switch
Installation surface: flat and horizontal
Installation location: dry, well ventilated and frost-proof

Motor data

Wilo-Comfort-Vario COR-1...	Nominal motor power	Nominal current 3~400 V, 50 Hz	Motor efficiency		
	P_2	I_N	$\eta_{m\ 50\%}$	$\eta_{m\ 75\%}$	$\eta_{m\ 100\%}$
	kW	A	%		
MHIE 406-GE	2.2	5.6	81.0	84.0	85.5

Motor efficiency based on 400 V, 50 Hz

Dimensions, weights

Wilo-Comfort-Vario COR-1...	Nominal diameters of the pipe connections on suction side	Nominal diameters of pipe connections on the pressure side	Dimensions								Weight approx.
	RPS	*RPD*	*H*	*H1*	*H3*	*L*	*L3*	*P*	*P1*	*P3*	*m*
			mm								kg
MHIE 406-GE	Rp 1¼	Rp 1¼	905	190	90	600	326	375	182	300	47.5

Technical data Wilo-Comfort-Vario COR-1 MHIE...-GE

Pump curves

Wilo-Comfort-Vario COR-1 MHIE 803-2G-GE

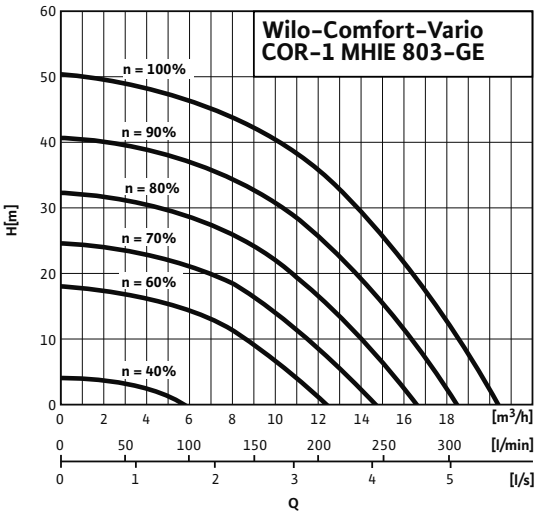

Dimension drawing

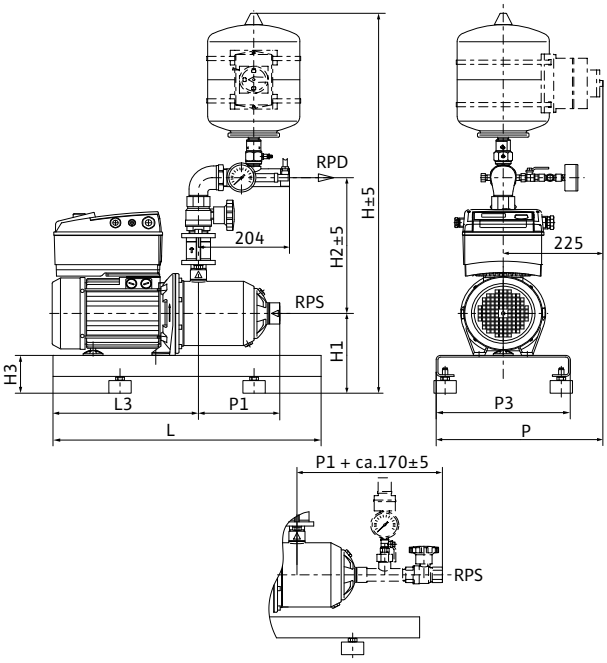

Sample systems are shown.
Accessories (to be ordered separately): Optional WMS low-water cut-out switchgear kit, main switch
Installation surface: flat and horizontal
Installation location: dry, well ventilated and frost-proof

Motor data

Wilo-Comfort-Vario COR-1...	Nominal motor power	Nominal current 3~400 V, 50 Hz	Motor efficiency		
	P_2	I_N	$\eta_{m\,50\%}$	$\eta_{m\,75\%}$	$\eta_{m\,100\%}$
	kW	A	%		
MHIE 803-GE	2.2	5.6	81.0	84.0	85.5

Motor efficiency based on 400 V, 50 Hz

Dimensions, weights

Wilo-Comfort-Vario COR-1...	Nominal diameters of the pipe connections on suction side	Nominal diameters of pipe connections on the pressure side	Dimensions								Weight approx.
	RPS	*RPD*	*H*	*H1*	*H3*	*L*	*L3*	*P*	*P1*	*P3*	*m*
			mm								kg
MHIE 803-GE	Rp 1½	Rp 1½	915	190	90	600	326	375	121.5	300	48.2

Technical data Wilo-Comfort-Vario COR-1 MHIE...-GE

Pump curves

Wilo-Comfort-Vario COR-1 MHIE 1602-2G-GE

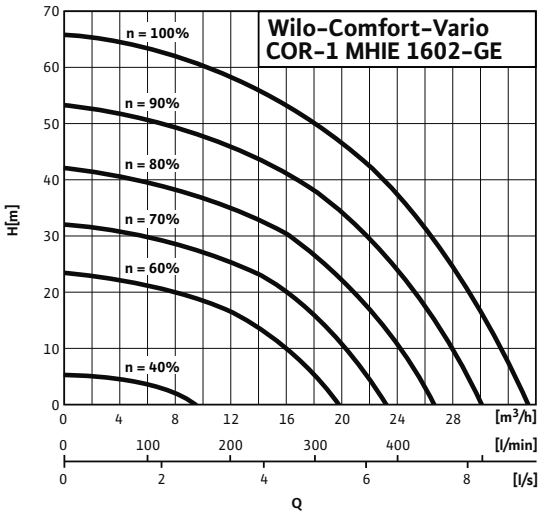

Dimension drawing

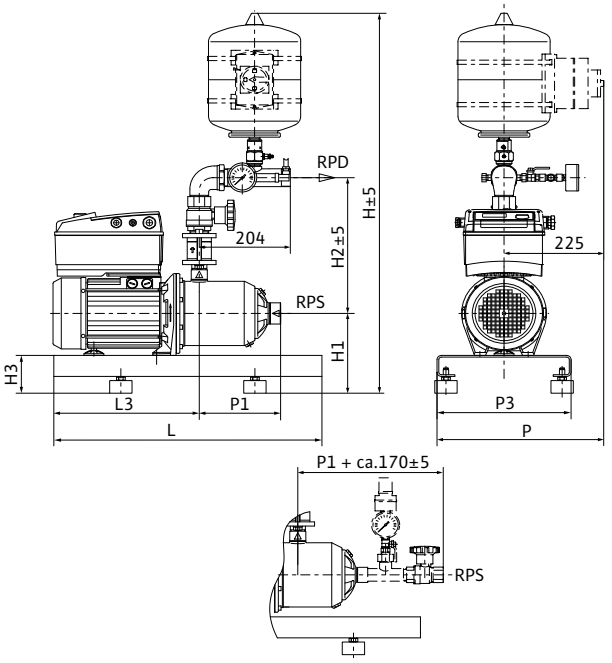

Sample systems are shown.
Accessories (to be ordered separately): Optional WMS low-water cut-out switchgear kit, main switch
Installation surface: flat and horizontal
Installation location: dry, well ventilated and frost-proof

Motor data

Wilo-Comfort-Vario COR-1...	Nominal motor power	Nominal current 3~400 V, 50 Hz	Motor efficiency		
	P_2	I_N	$\eta_{m\ 50\%}$	$\eta_{m\ 75\%}$	$\eta_{m\ 100\%}$
	kW	A	%		
MHIE 1602-GE	2.2	5.6	81.0	84.0	85.5

Motor efficiency based on 400 V, 50 Hz

Dimensions, weights

Wilo-Comfort-Vario COR-1...	Nominal diameters of the pipe connections on suction side	Nominal diameters of pipe connections on the pressure side	Dimensions								Weight approx.
	RPS	*RPD*	*H*	*H1*	*H3*	*L*	*L3*	*P*	*P1*	*P3*	*m*
			mm								kg
MHIE 1602-GE	Rp 2	Rp 1½	915	190	90	600	326	375	138	300	85.3

Series description Wilo-Economy CO-1 Helix V.../CE+

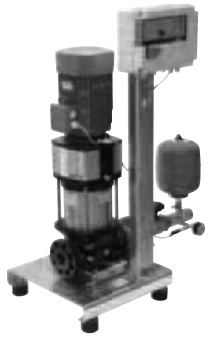

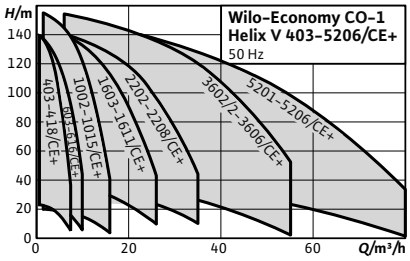

Design
High-efficiency, connection-ready water-supply unit. With multi-stage, vertical stainless steel high-pressure multistage centrifugal pump in glanded version, incl. Economy-Controller CE+.

Type key

Example:	**Wilo-CO-1 Helix V 22 08/K/CE+**
CO	Compact pressure boosting system
1	Number of pumps
Helix V	Pump series
22	Nominal flow rate [m^3/h] of single pump
08	Number of single-pump stages
K	With cartridge mechanical seal (für Helix V 22.., V 36.., V 52..)
CE+	Control unit; CE+ = Economy-Controller for Helix

Application
- Fully automatic water supply in inlet mode, either from the public water supply network or from a tank.
- Pumping of potable water, process water, cooling water, fire water (apart from fire-extinguishing systems in accordance with DIN14462) or other water mixtures that do not attack the materials used chemically or mechanically and do not contain abrasive or long-fibre constituents

Special features/product advantages
- Heavy-duty system due to stainless steel high-pressure multi-stage centrifugal pumps of the Helix V series
- High-efficiency pump hydraulics in conjunction with IE2 standard motors
- Easily adjustable and operationally reliable due to the CE+ switchgear used

Technical data
- Mains connection 3~230/400 V ± 10%, 50 Hz (other versions on request)
- Max. fluid temperature 50 °C (70 °C optional)
- Max. ambient temperature 40 °C
- Operating pressure 16 bar
- Inlet pressure 10 bar
- Switching pressure stages 6/10/16 bar
- Nominal connection diameter on discharge side (DN 32) Rp 1 ¼" - DN 80
- Nominal connection diameters on inlet side R 1 ¼"- DN 80
- Nominal speed 2850 rpm
- Protection class IP 54 (CE+ control device)
- Switching capacity P_2 max. at max. 10 A = 4 kW (for > 4 kW downstream electromechanical power section)
- Fuse protection on mains side AC 3 according to motor power and EVU regulations
- Approved fluids (other fluids on request):
  - Pure water without settling sediments
  - Process water, cold water, cooling water and rainwater
  - Potable water
  - Fire water
- Note on fluids: Approved fluids are generally waters which do not attack the materials used, neither chemically nor mechanically, and do not contain any abrasive or long-fibre constituents.

Equipment/function
- Automatic pump control with CE+ controller
- 1 Helix V series pump with IE2 motor
- Parts that come in contact with the fluid are corrosion-resistant
- Base frame made of galvanised steel, with height-adjustable vibration absorbers for insulation against structure-borne noise
- Check valve, pressure side
- Non-return valve, pressure side
- Diaphragm pressure vessel 8 l, PN16, pressure side
- Pressure transducer, pressure side
- Pressure gauge, pressure side
- Optional low-water cut-out switchgear (WMS) with pressure gauge, suction side

Materials
Helix V 4 to V 16
- Impellers, diffusors, stage housing made of stainless steel 1.4307
- Pump housing made of stainless steel 1.4301
- Shaft made of stainless steel 1.4057
- 1.4404 shaft protection sleeve
- O-ring gaskets made of EPDM (FKM gasket on request)
- Pipework made of stainless steel 1.4571

Helix V 22 to Helix V 52
- Impellers, diffusors, stage housing made of stainless steel 1.4307
- Pump housing made of cataphoretically coated EN-GJL 250 cast iron
- Shaft made of stainless steel 1.4057

Series description Wilo-Economy CO-1 Helix V.../CE+

- 1.4404 shaft protection sleeve
- O-ring gasket made of EPDM (FKM gasket on request)
- Pipework made of stainless steel 1.4571

Description/design

- Base frame: galvanised steel, with height-adjustable vibration absorbers for comprehensive insulation against structure-borne noise; other versions on request
- Pipework: complete pipework made of stainless steel, suitable for the connection of all piping materials used; the pipework is dimensioned according to the overall hydraulic performance of the pressure boosting system
- Pumps: one pump of the series Helix V 4 to Helix V 52; all parts that come in contact with the fluid are made of stainless steel for the Helix V 4 to V 16 series or of stainless steel/grey cast iron with cataphoretic coating for the Helix V 22 to Helix V 52 series; other versions on request. KTW/WRAS/ACS approval for all parts that come in contact with the fluid.
- Valves: the pump is fitted on the pressure side with a check valve with DVGW approval mark or a shut-off valve with DVGW approval mark and on the pressure side with a KTW-approved non-return valve
- Diaphragm pressure vessel: 8 l/PN16 arranged on the discharge side with a diaphragm made of butyl rubber, with DVGW/KTW approval, completely safe in accordance with food safety laws, for testing and inspection purposes, with a shut-off ball cock with drain and throughflow fitting with DVGW/KTW approval in accordance with DIN 4807
- Pressure sensor: 4 to 20 mA, arranged on the discharge side for controlling the central CE+ controller
- Pressure display: pressure gauge (ø 63 mm) arranged on the discharge side; additional digital indication of the discharge pressure on the alphanumeric touchscreen on the Comfort-Controller
- Switchgear/controller: the system is equipped with a CE+ controller as standard

Scope of delivery

- Factory-mounted, ready-to-connect pressure boosting system checked for proper functioning and impermeability
- Packaging
- Installation and operating instructions

Series description Wilo-Economy CO-1 Helix V.../CE+

Terminal diagram

CE+

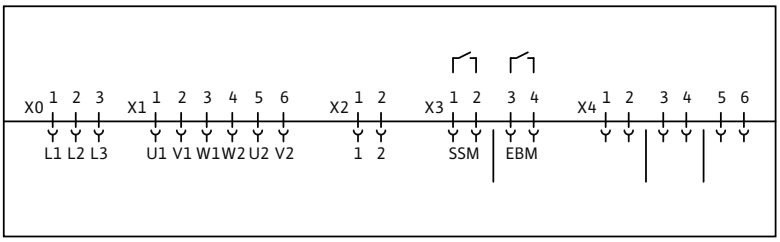

x0: Mains connection
x1: Power supply, pumps
x2: Thermal winding contact connection
x3: Potential-free contacts (signals)
- 1-2. SSM (collective fault signal)
- 3-4, EBM (individual run signal)

x4: Sensor connections
- 1-2. TLS (dry-running protection)
- 3, sensor (+); 4, sensor (In)
- 5-6, external On/Off

Technical data Wilo-Economy CO-1 Helix V.../CE+

Pump curves

Wilo-Economy CO-1 Helix V 403-418/CE+

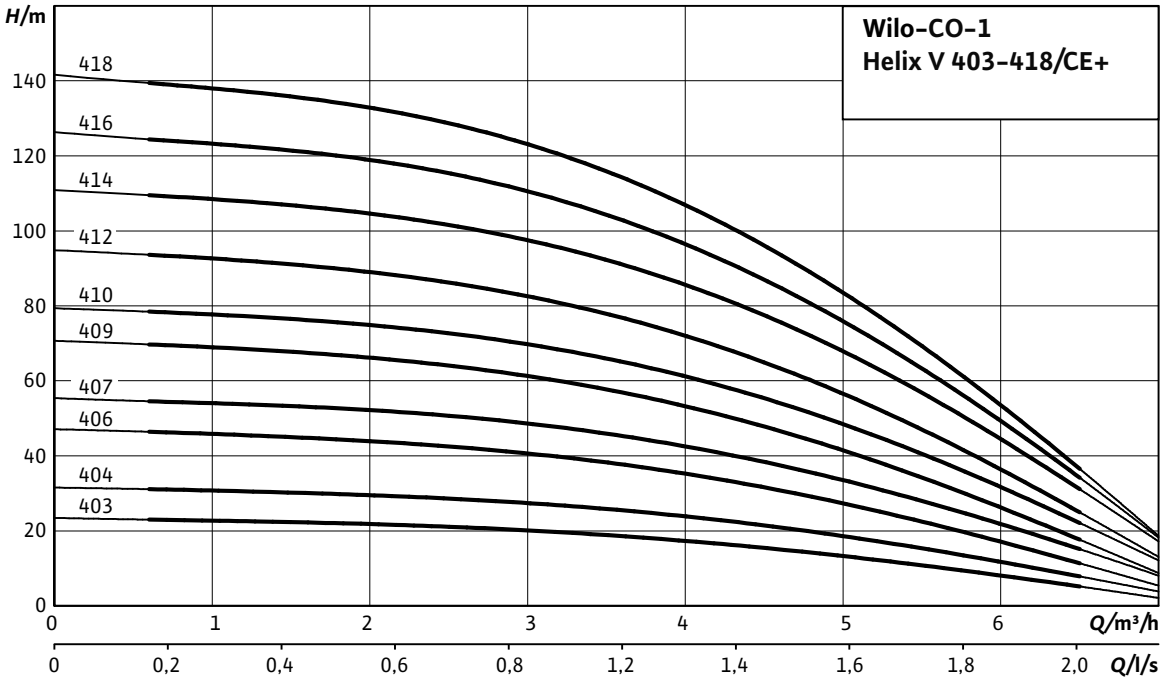

Motor data

Wilo-Economy CO-1...	Nominal motor power	Nominal current 3~230 V, 50 Hz	Nominal current 3~400 V, 50 Hz	Motor efficiency		
	P_2	I_N		$\eta_{m\ 50\%}$	$\eta_{m\ 75\%}$	$\eta_{m\ 100\%}$
	kW	A		%		
Helix V 403/CE+	0.37	1.69	0.93	71.0	72.8	72.8
Helix V 404/CE+	0.55	2.27	1.31	73.0	75.0	75.5
Helix V 406/CE+	0.75	3.06	1.77	76.0	77.4	77.4
Helix V 407/CE+	1.1	4.4	2.4	78.0	79.6	79.6
Helix V 409/CE+	1.1	4.4	2.4	78.0	79.6	79.6
Helix V 410/CE+	1.5	5.7	3.1	80.0	81.3	81.3
Helix V 412/CE+	1.5	5.7	3.1	80.0	81.3	81.3
Helix V 414/CE+	2.2	8	4.5	82.0	83.2	83.2
Helix V 416/CE+	2.2	8	4.5	82.0	83.2	83.2
Helix V 418/CE+	2.2	8	4.5	82.0	83.2	83.2

Motor efficiency based on 400 V, 50 Hz

Technical data Wilo-Economy CO-1 Helix V.../CE+

Dimension drawing

Wilo-Comfort CO-1 Helix V 403...412/CE+; CO-1 Helix V 603...610/CE+

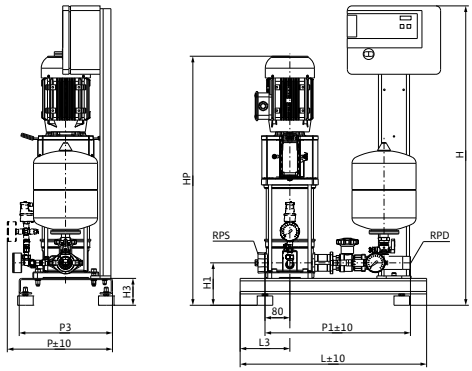

Sample systems are shown. Switchbox position depends on pump height.
Accessories (to be ordered separately): Optional WMS low-water cut-out switchgear kit
Installation surface: flat and horizontal
Installation location: dry, well ventilated and frost-proof

Dimension drawing

Wilo-Comfort CO-1 Helix V 414...418/CE+; CO-1 Helix V 613...616/CE+

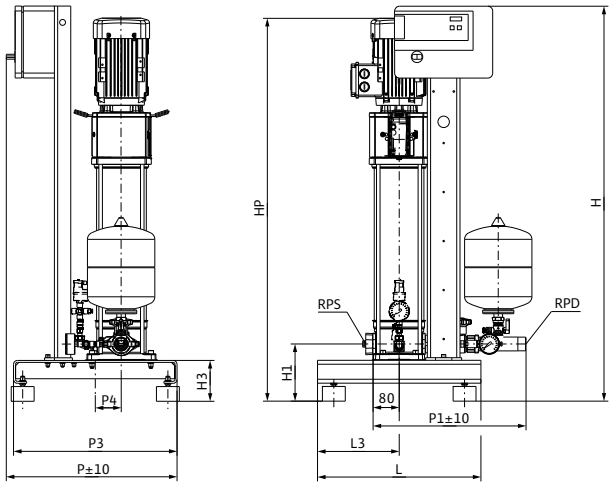

Sample systems are shown. Switchbox position depends on pump height.
Accessories (to be ordered separately): Optional WMS low-water cut-out switchgear kit
Installation surface: flat and horizontal
Installation location: dry, well ventilated and frost-proof

Dimensions, weights

Wilo-Economy CO-1...	Nominal diameters of the pipe connections on suction side	Nominal diameters of pipe connections on the pressure side	Dimensions									Weight approx.
	RPS	*RPD*	*H*	*H1*	*H3*	*HP*	*L*	*L3*	*P*	*P1*	*P3*	*m*
			mm									kg
Helix V 403/CE+	Rp 1¼	R 1¼	970	140	90	710	600	160	340	470	300	50
Helix V 404/CE+	Rp 1¼	R 1¼	970	140	90	735	600	160	340	470	300	51
Helix V 406/CE+	Rp 1¼	R 1¼	970	140	90	805	600	160	340	470	300	54
Helix V 407/CE+	Rp 1¼	R 1¼	970	140	90	830	600	160	340	470	300	56
Helix V 409/CE+	Rp 1¼	R 1¼	970	140	90	880	600	160	340	470	300	57
Helix V 410/CE+	Rp 1¼	R 1¼	970	140	90	937	600	160	340	470	300	62
Helix V 412/CE+	Rp 1¼	R 1¼	970	140	90	987	600	160	340	470	300	63
Helix V 414/CE+	Rp 1¼	R 1¼	1220	175	125	1072	500	250	500	470	500	77
Helix V 416/CE+	Rp 1¼	R 1¼	1220	175	125	1122	500	250	500	470	500	78
Helix V 418/CE+	Rp 1¼	R 1¼	1220	175	125	1172	500	250	500	470	500	79

Technical data Wilo-Economy CO-1 Helix V.../CE+

Pump curves

Wilo-Economy CO-1 Helix V 603-616/CE+

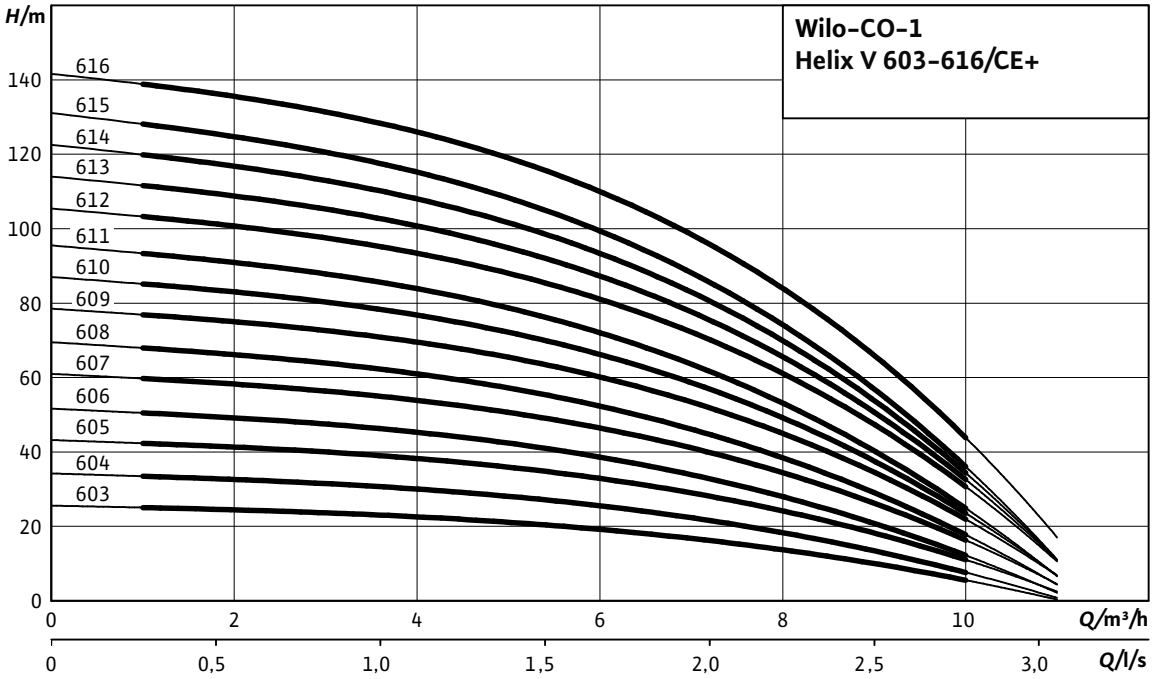

Motor data

Wilo-Economy CO-1...	Nominal motor power	Nominal current 3~230 V, 50 Hz	Nominal current 3~400 V, 50 Hz	Motor efficiency		
	P_2	I_N		$\eta_{m\ 50\%}$	$\eta_{m\ 75\%}$	$\eta_{m\ 100\%}$
	kW	A		%		
Helix V 603/CE+	0.55	2.27	1.31	73.0	75.0	75.5
Helix V 604/CE+	0.75	3.06	1.77	76.0	77.4	77.4
Helix V 605/CE+	1.1	4.4	2.6	78.0	79.6	79.6
Helix V 606/CE+	1.1	4.4	2.6	78.0	79.6	79.6
Helix V 607/CE+	1.5	5.7	3.3	80.0	81.3	81.3
Helix V 608/CE+	1.5	5.7	3.3	80.0	81.3	81.3
Helix V 609/CE+	2.2	8	4.6	82.0	83.2	83.2
Helix V 610/CE+	2.2	8	4.6	82.0	83.2	83.2
Helix V 611/CE+	2.2	8	4.6	82.0	83.2	83.2
Helix V 612/CE+	3	11.6	6.7	82.5	85.0	84.6
Helix V 613/CE+	3	11.6	6.7	82.5	85.0	84.6
Helix V 614/CE+	3	11.6	6.7	82.5	85.0	84.6
Helix V 615/CE+	3	11.6	6.7	82.5	85.0	84.6
Helix V 616/CE+	4	13.5	7.8	85.0	85.8	85.8

Motor efficiency based on 400 V, 50 Hz

Technical data Wilo-Economy CO-1 Helix V.../CE+

Dimension drawing

Wilo-Comfort CO-1 Helix V 403...412/CE+;
CO-1 Helix V 603...610/CE+

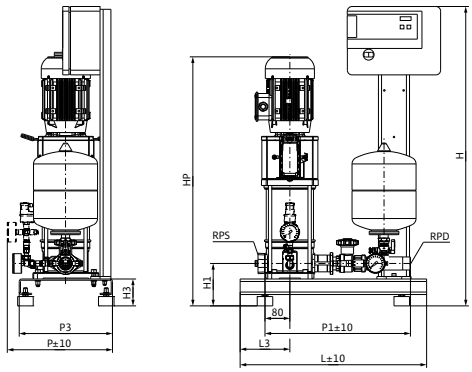

Sample systems are shown. Switchbox position depends on pump height.
Accessories (to be ordered separately): Optional WMS low-water cut-out switchgear kit
Installation surface: flat and horizontal
Installation location: dry, well ventilated and frost-proof

Dimension drawing

Wilo-Comfort CO-1 Helix V 414...418/CE+;
CO-1 Helix V 613...616/CE+

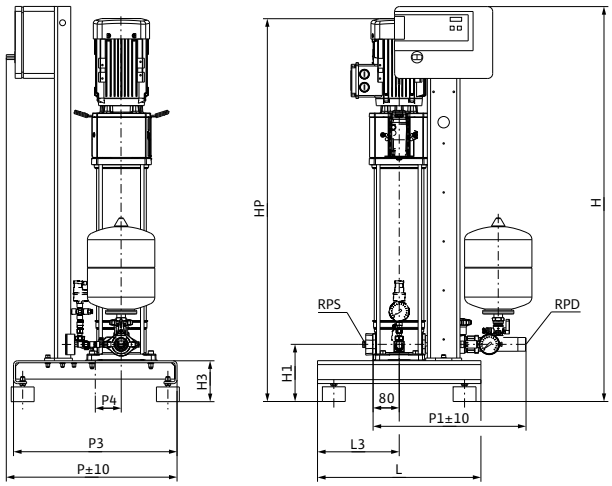

Sample systems are shown. Switchbox position depends on pump height.
Accessories (to be ordered separately): Optional WMS low-water cut-out switchgear kit
Installation surface: flat and horizontal
Installation location: dry, well ventilated and frost-proof

Dimensions, weights

Wilo-Economy CO-1...	Nominal diameters of the pipe connections on suction side	Nominal diameters of pipe connections on the pressure side	Dimensions									Weight approx.
	RPS	*RPD*	*H*	*H1*	*H3*	*HP*	*L*	*L3*	*P*	*P1*	*P3*	*m*
			mm									kg
Helix V 603/CE+	Rp 1¼	R 1¼	970	140	90	748	600	160	340	470	300	52
Helix V 604/CE+	Rp 1¼	R 1¼	970	140	90	805	600	160	340	470	300	55
Helix V 605/CE+	Rp 1¼	R 1¼	970	140	90	843	600	160	340	470	300	57
Helix V 606/CE+	Rp 1¼	R 1¼	970	140	90	880	600	160	340	470	300	58
Helix V 607/CE+	Rp 1¼	R 1¼	970	140	90	950	600	160	340	470	300	63
Helix V 608/CE+	Rp 1¼	R 1¼	970	140	90	988	600	160	340	470	300	64
Helix V 609/CE+	Rp 1¼	R 1¼	970	140	90	1025	600	160	340	470	300	67
Helix V 610/CE+	Rp 1¼	R 1¼	970	140	90	1063	600	160	340	470	300	68
Helix V 611/CE+	Rp 1¼	R 1¼	1220	175	125	1173	500	250	500	470	500	79
Helix V 612/CE+	Rp 1¼	R 1¼	1220	175	125	1208	500	250	500	470	500	83
Helix V 613/CE+	Rp 1¼	R 1¼	1220	175	125	1283	500	250	500	470	500	84
Helix V 614/CE+	Rp 1¼	R 1¼	1220	175	125	1283	500	250	500	470	500	85
Helix V 615/CE+	Rp 1¼	R 1¼	1220	175	125	1358	500	250	500	470	500	86
Helix V 616/CE+	Rp 1¼	R 1¼	1220	175	125	1402	500	250	500	470	500	97

Technical data Wilo-Economy CO-1 Helix V.../CE+

Pump curves

Wilo-Economy CO-1 Helix V 1002-1015/CE+

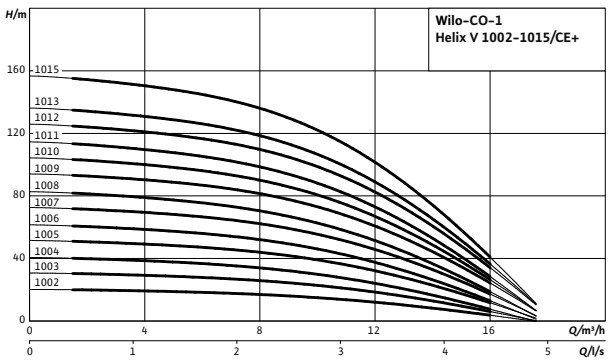

Dimension drawing

Wilo-Comfort CO-1 Helix V 1002...1008/CE+

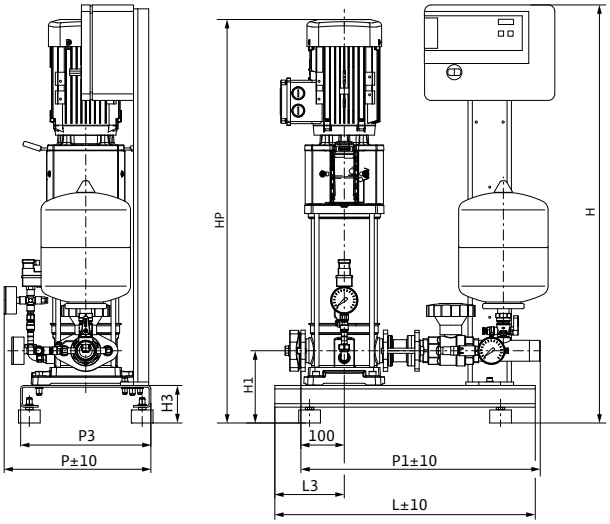

Sample systems are shown. Switchbox position depends on pump height.
Accessories (to be ordered separately): Optional WMS low-water cut-out switchgear kit
Installation surface: flat and horizontal
Installation location: dry, well ventilated and frost-proof

Motor data

Wilo-Economy CO-1 Helix...	Nominal motor power	Nominal current 3~230 V, 50 Hz	Nominal current 3~400 V, 50 Hz	Motor efficiency		
	P_2	I_N		$\eta_{m\ 50\%}$	$\eta_{m\ 75\%}$	$\eta_{m\ 100\%}$
	kW	A		%		
Helix V 1002/CE+	0.75	3.06	1.62	76.0	77.4	77.4
Helix V 1003/CE+	1.1	4.4	2.4	78.0	79.6	79.6
Helix V 1004/CE+	1.5	5.7	3.3	80.0	81.3	81.3
Helix V 1005/CE+	2.2	8	4.6	82.0	83.2	83.2
Helix V 1006/CE+	2.2	8	4.6	82.0	83.2	83.2
Helix V 1007/CE+	3	11.6	6.7	82.5	85.0	84.6
Helix V 1008/CE+	3	11.6	6.7	82.5	85.0	84.6
Helix V 1009/CE+	4	13.5	7.8	85.0	85.8	85.8
Helix V 1010/CE+	4	13.5	7.8	85.0	85.8	85.8
Helix V 1011/CE+	4	13.5	7.8	85.0	85.8	85.8
Helix V 1012/CE+	5.5	–	10.7	85.2	86.9	88.1
Helix V 1013/CE+	5.5	–	10.7	85.2	86.9	88.1
Helix V 1015/CE+	5.5	–	10.7	85.2	86.9	88.1

Motor efficiency based on 400 V, 50 Hz

Technical data Wilo-Economy CO-1 Helix V.../CE+

Dimension drawing

Wilo-Comfort CO-1 Helix V 1009...1011/CE+;
CO-1 Helix V 1603...1606/CE+

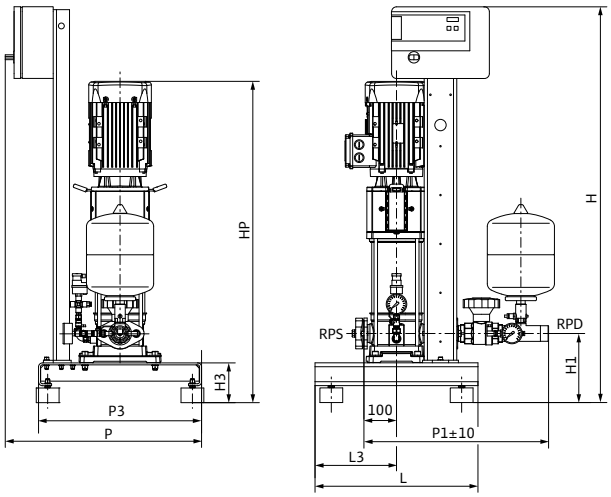

Sample systems are shown. Switchbox position depends on pump height.
Accessories (to be ordered separately): Optional WMS low-water cut-out switchgear kit
Installation surface: flat and horizontal
Installation location: dry, well ventilated and frost-proof

Dimension drawing

Wilo-Comfort CO-1 Helix V 1012...1015/CE+;
CO-1 Helix V 1607...1611/CE+

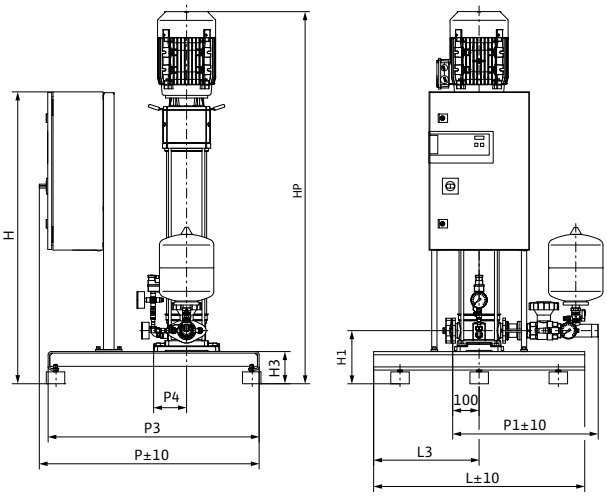

Sample systems are shown. Switchbox position depends on pump height.
Accessories (to be ordered separately): Optional WMS low-water cut-out switchgear kit
Installation surface: flat and horizontal
Installation location: dry, well ventilated and frost-proof

Dimensions, weights

Wilo-Economy CO-1 Helix...	Nominal diameters of the pipe connections on suction side	Nominal diameters of pipe connections on the pressure side	Dimensions									Weight approx.
	RPS	*RPD*	*H*	*H1*	*H3*	*HP*	*L*	*L3*	*P*	*P1*	*P3*	*m*
			mm									kg
Helix V 1002/CE+	Rp 1½	R 1½	1185	170	90	751	600	160	340	556	300	61
Helix V 1003/CE+	Rp 1½	R 1½	1185	170	90	789	600	160	340	556	300	63
Helix V 1004/CE+	Rp 1½	R 1½	1185	170	90	859	600	160	340	556	300	69
Helix V 1005/CE+	Rp 1½	R 1½	1185	170	90	896	600	160	340	556	300	72
Helix V 1006/CE+	Rp 1½	R 1½	1185	170	90	934	600	160	340	556	300	73
Helix V 1007/CE+	Rp 1½	R 1½	1185	170	90	1007	600	160	340	556	300	77
Helix V 1008/CE+	Rp 1½	R 1½	1185	170	90	1044	600	160	340	556	300	78
Helix V 1009/CE+	Rp 1½	R 1½	1220	205	125	1160	500	250	625	556	500	101
Helix V 1010/CE+	Rp 1½	R 1½	1220	205	125	1198	500	250	625	556	500	102
Helix V 1011/CE+	Rp 1½	R 1½	1220	205	125	1273	500	250	625	556	500	103
Helix V 1012/CE+	Rp 1½	R 1½	1105	205	125	1265	800	400	835	556	800	132
Helix V 1013/CE+	Rp 1½	R 1½	1105	205	125	1340	800	400	835	556	800	133
Helix V 1015/CE+	Rp 1½	R 1½	1105	205	125	1415	800	400	835	556	800	135

Technical data Wilo-Economy CO-1 Helix V.../CE+

Pump curves

Wilo-Economy CO-1 Helix V 1603-1611/CE+

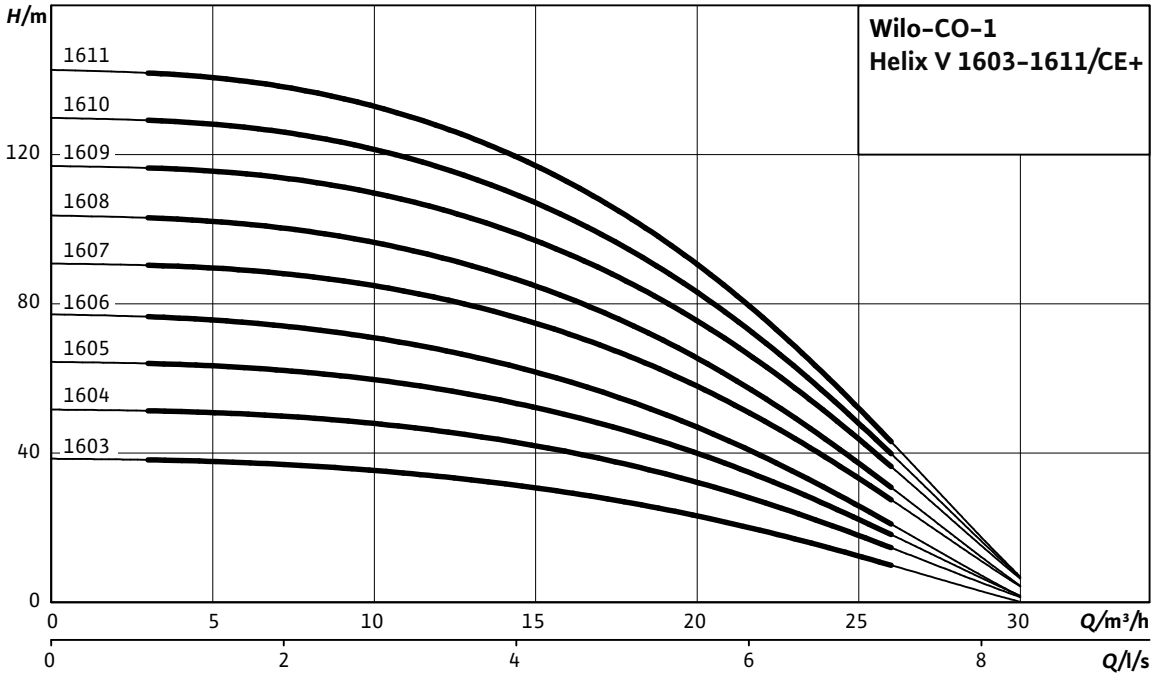

Motor data						
Wilo-Economy CO-1...	**Nominal motor power**	**Nominal current 3~230 V, 50 Hz**	**Nominal current 3~400 V, 50 Hz**	**Motor efficiency**		
	P_2	I_N		$\eta_{m\ 50\%}$	$\eta_{m\ 75\%}$	$\eta_{m\ 100\%}$
	kW	A		%		
Helix V 1603/CE+	2.2	8	4.6	82.0	83.2	83.2
Helix V 1604/CE+	3	11.6	6.7	82.5	85.0	84.6
Helix V 1605/CE+	4	13.5	7.8	85.0	85.8	85.8
Helix V 1606/CE+	4	13.5	7.8	85.0	85.8	85.8
Helix V 1607/CE+	5.5	–	10.7	85.2	86.9	88.1
Helix V 1608/CE+	5.5	–	10.7	85.2	86.9	88.1
Helix V 1609/K/CE+	7.5	–	14	88.5	89.9	89.5
Helix V 1610/K/CE+	7.5	–	14	88.5	89.9	89.5
Helix V 1611/K/CE+	7.5	–	14	88.5	89.9	89.5

Motor efficiency based on 400 V, 50 Hz

Technical data Wilo-Economy CO-1 Helix V.../CE+

Dimension drawing

Wilo-Comfort CO-1 Helix V 1009...1011/CE+;
CO-1 Helix V 1603...1606/CE+

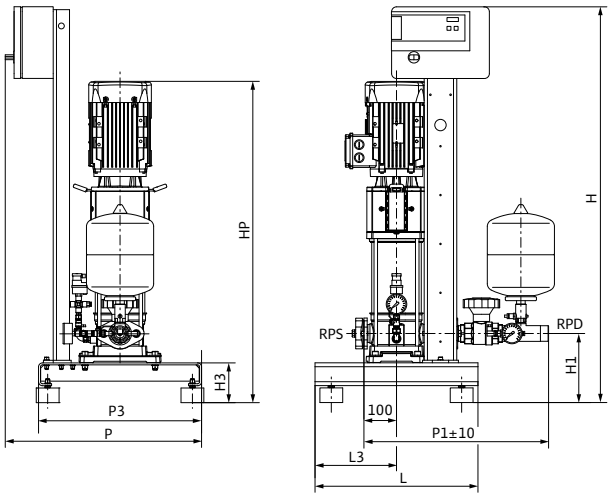

Sample systems are shown. Switchbox position depends on pump height.
Accessories (to be ordered separately): Optional WMS low-water cut-out switchgear kit
Installation surface: flat and horizontal
Installation location: dry, well ventilated and frost-proof

Dimension drawing

Wilo-Comfort CO-1 Helix V 1012...1015/CE+;
CO-1 Helix V 1607...1611/CE+

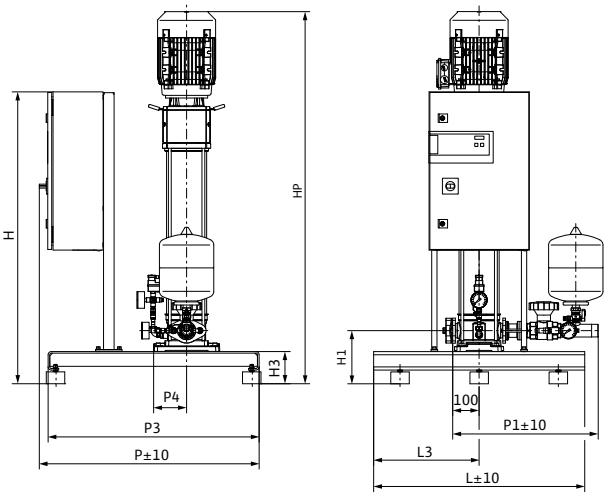

Sample systems are shown. Switchbox position depends on pump height.
Accessories (to be ordered separately): Optional WMS low-water cut-out switchgear kit
Installation surface: flat and horizontal
Installation location: dry, well ventilated and frost-proof

Dimensions, weights

Wilo-Economy CO-1...	Nominal diameters of the pipe connections on suction side	Nominal diameters of pipe connections on the pressure side	Dimensions									Weight approx.
	RPS	*RPD*	*H*	*H1*	*H3*	*HP*	*L*	*L3*	*P*	*P1*	*P3*	*m*
			mm									kg
Helix V 1603/CE+	Rp 2	R 1½	1220	212	122	901	500	250	525	567	500	84
Helix V 1604/CE+	Rp 2	R 1½	1220	212	122	986	500	250	525	567	500	89
Helix V 1605/CE+	Rp 2	R 1½	1220	212	122	1082	500	250	525	567	500	89
Helix V 1606/CE+	Rp 2	R 1½	1220	212	122	1132	500	250	525	567	500	90
Helix V 1607/CE+	Rp 2	R 1½	1105	212	122	1172	500	250	625	567	500	142
Helix V 1608/CE+	Rp 2	R 1½	1105	212	122	1222	500	250	625	567	500	144
Helix V 1609/K/CE+	Rp 2	R 1½	1105	212	122	1459	800	400	835	567	800	156
Helix V 1610/K/CE+	Rp 2	R 1½	1105	212	122	1609	800	400	835	567	800	158
Helix V 1611/K/CE+	Rp 2	R 1½	1105	212	122	1609	800	400	835	567	800	159

Technical data Wilo-Economy CO-1 Helix V.../CE+

Pump curves

Wilo-Economy CO-1 Helix V 2202-2208/CE+

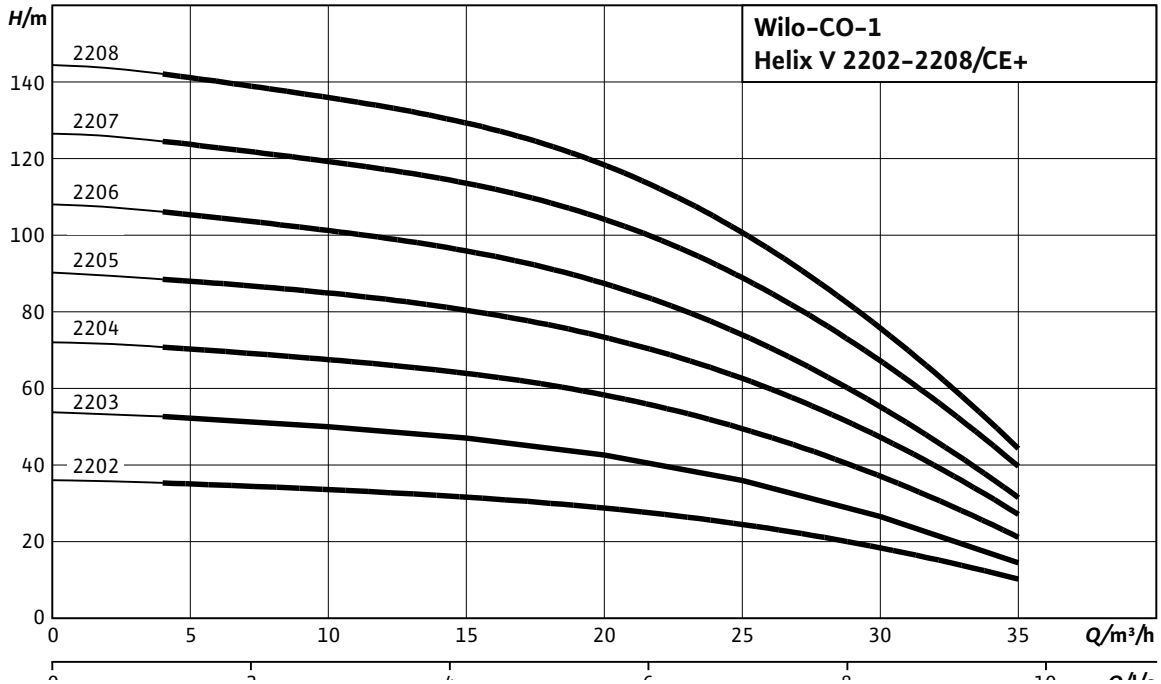

Motor data

Wilo-Economy CO-1...	Nominal motor power	Nominal current 3~230 V, 50 Hz	Nominal current 3~400 V, 50 Hz	Motor efficiency		
	P_2	I_N		$\eta_{m\ 50\%}$	$\eta_{m\ 75\%}$	$\eta_{m\ 100\%}$
	kW	A		%		
Helix V 2202/K/CE+	3	11.6	6.7	82.5	85.0	84.6
Helix V 2203/K/CE+	4	13.5	7.8	85.0	85.8	85.8
Helix V 2204/K/CE+	5.5	–	10.7	85.2	86.9	88.1
Helix V 2205/K/CE+	7.5	–	14	88.5	89.9	89.5
Helix V 2206/K/CE+	7.5	–	14	88.5	89.9	89.5
Helix V 2207/K/CE+	9	–	16.3	86.6	88.4	88.8
Helix V 2208/K/CE+	11	–	19.4	87.5	89.3	89.4

Motor efficiency based on 400 V, 50 Hz

Technical data Wilo-Economy CO-1 Helix V.../CE+

Dimension drawing

Wilo-Comfort CO-1 Helix V 2202...2208/CE+

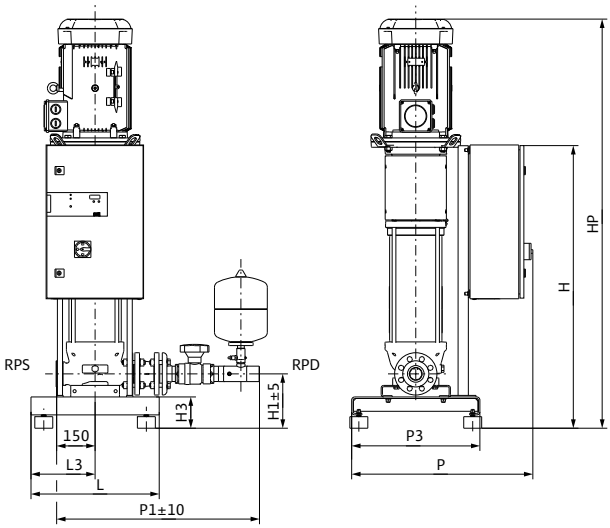

Sample systems are shown. Switchbox position depends on pump height.
Accessories (to be ordered separately): Optional WMS low-water cut-out switchgear kit
Installation surface: flat and horizontal
Installation location: dry, well ventilated and frost-proof

Dimensions, weights

Wilo-Economy CO-1...	Nominal diameters of the pipe connections on suction side	Nominal diameters of pipe connections on the pressure side	Dimensions									Weight approx.
	RPS	*RPD*	*H*	*H1*	*H3*	*HP*	*L*	*L3*	*P*	*P1*	*P3*	*m*
			mm									kg
Helix V 2202/K/CE+	DN 50	R 2	1220	215	125	968	500	250	525	795	500	126
Helix V 2203/K/CE+	DN 50	R 2	1220	215	125	1063	500	250	525	795	500	133
Helix V 2204/K/CE+	DN 50	R 2	1105	215	125	1252	500	250	625	795	500	167
Helix V 2205/K/CE+	DN 50	R 2	1105	215	125	1337	800	400	835	795	800	175
Helix V 2206/K/CE+	DN 50	R 2	1105	215	125	1387	800	400	835	795	800	177
Helix V 2207/K/CE+	DN 50	R 2	1105	215	125	1437	800	400	835	795	800	178
Helix V 2208/K/CE+	DN 50	R 2	1105	215	125	1598	800	400	835	795	800	212

Technical data Wilo-Economy CO-1 Helix V.../CE+

Pump curves

Wilo-Economy CO-1 Helix V 3602/2-3606/CE+

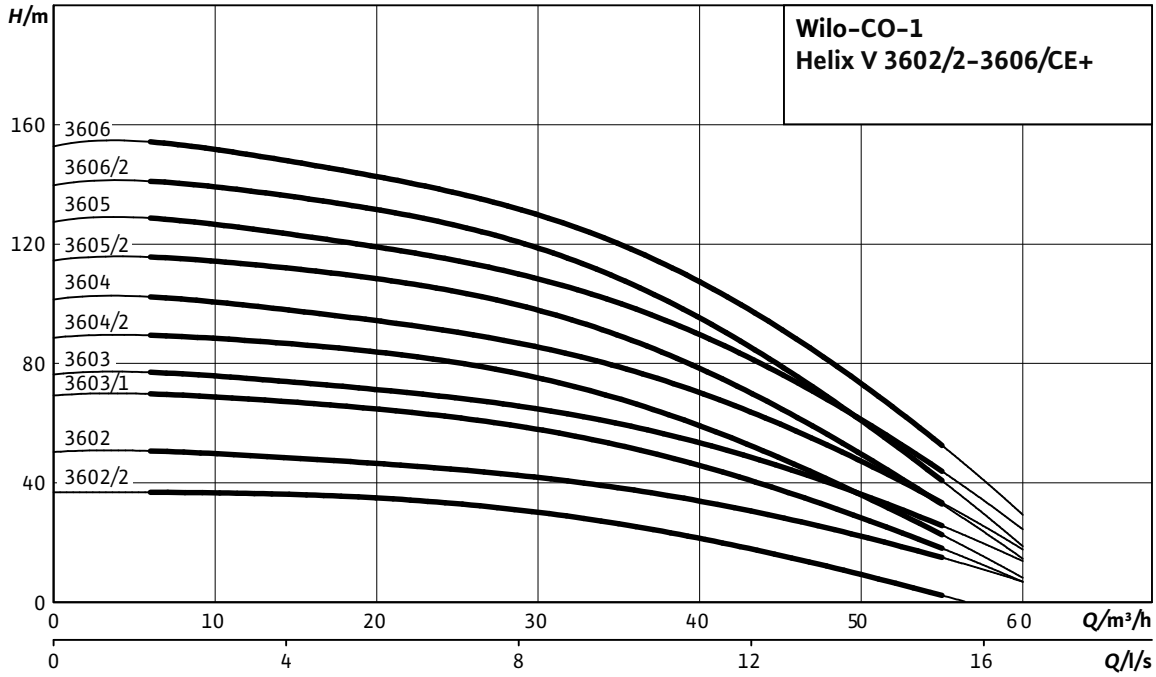

Motor data

Wilo-Economy CO-1...	Nominal motor power	Nominal current 3~230 V, 50 Hz	Nominal current 3~400 V, 50 Hz	Motor efficiency		
	P_2	I_N		$\eta_{m\ 50\%}$	$\eta_{m\ 75\%}$	$\eta_{m\ 100\%}$
	kW	A		%		
Helix V 3602/2/K/CE+	4	13.5	7.5	85.0	85.8	85.8
Helix V 3602/K/CE+	5.5	–	10.1	85.2	86.9	88.1
Helix V 3603/1/K/CE+	7.5	–	13.5	88.5	89.9	89.5
Helix V 3603/K/CE+	9	–	16.3	86.6	88.4	88.8
Helix V 3604/K/CE+	11	–	20	87.5	89.3	89.4
Helix V 3604/2/K/CE+	11	–	20	87.5	89.3	89.4
Helix V 3605/K/CE+	15	–	26.2	88.4	90.2	90.3
Helix V 3605/2/K/CE+	15	–	26.2	88.4	90.2	90.3
Helix V 3606/K/CE+	18.5	–	32	89.0	90.8	90.9
Helix V 3606/2/K/CE+	15	–	26.2	88.4	90.2	90.3

Motor efficiency based on 400 V, 50 Hz

Technical data Wilo-Economy CO-1 Helix V.../CE+

Dimension drawing G

Wilo-Comfort CO-1 Helix V 3602/2/CE+

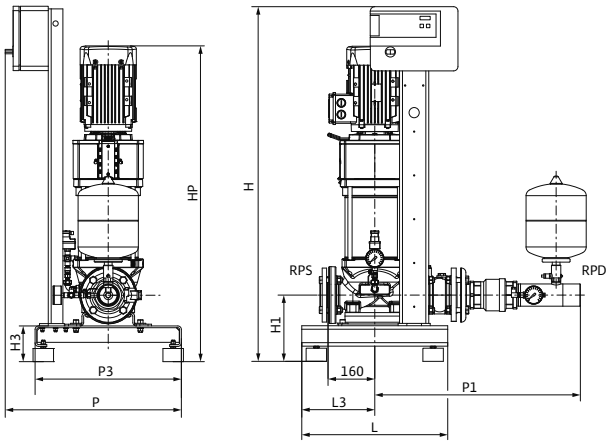

Sample systems are shown. Switchbox position depends on pump height.
Accessories (to be ordered separately): Optional WMS low-water cut-out switchgear kit
Installation surface: flat and horizontal
Installation location: dry, well ventilated and frost-proof

Dimension drawing H

Wilo-Comfort CO-1 Helix V 3602...3606/CE+

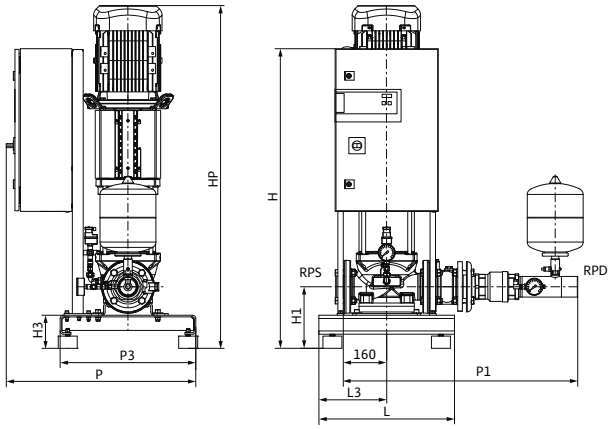

Sample systems are shown. Switchbox position depends on pump height.
Accessories (to be ordered separately): Optional WMS low-water cut-out switchgear kit
Installation surface: flat and horizontal
Installation location: dry, well ventilated and frost-proof

Dimensions, weights

Wilo-Economy CO-1...	Nominal diameters of the pipe connections on suction side	Nominal diameters of pipe connections on the pressure side	Dimensions									Weight approx.
	RPS	*RPD*	*H*	*H1*	*H3*	*HP*	*L*	*L3*	*P*	*P1*	*P3*	*m*
			mm									kg
Helix V 3602/2/K/CE+	DN 65	R 2½	1220	227	122	1056	500	250	525	865	500	144
Helix V 3602/K/CE+	DN 65	R 2½	1105	227	122	1197	500	250	625	865	500	172
Helix V 3603/1/K/CE+	DN 65	R 2½	1105	227	122	1299	800	400	835	865	800	206
Helix V 3603/K/CE+	DN 65	R 2½	1105	227	122	1299	800	400	835	865	800	206
Helix V 3604/K/CE+	DN 65	R 2½	1105	227	122	1476	800	400	835	865	800	242
Helix V 3604/2/K/CE+	DN 65	R 2½	1105	227	122	1476	800	400	835	865	800	242
Helix V 3605/K/CE+	DN 65	R 2½	1105	227	122	1543	800	400	705	865	500	256
Helix V 3605/2/K/CE+	DN 65	R 2½	1105	227	122	1543	800	400	705	865	500	256
Helix V 3606/K/CE+	DN 65	R 2½	1105	227	122	1610	800	400	705	865	500	269
Helix V 3606/2/K/CE+	DN 65	R 2½	1105	227	122	1610	800	400	705	865	500	259

Technical data Wilo-Economy CO-1 Helix V.../CE+

Pump curves

Wilo-Economy CO-1 Helix V 5202/2...5206/2/CE+

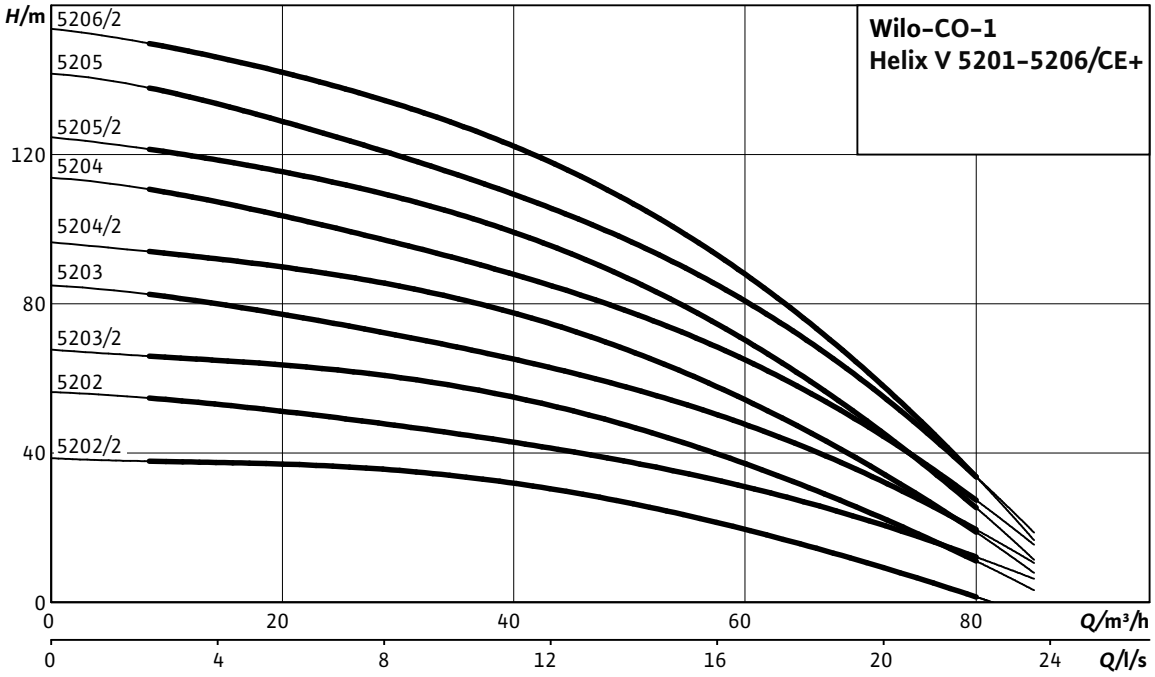

Motor data					
Wilo-Economy CO-1...	**Nominal motor power**	**Nominal current 3~400 V, 50 Hz**	**Motor efficiency**		
	P_2	I_N	$\eta_{m\ 50\%}$	$\eta_{m\ 75\%}$	$\eta_{m\ 100\%}$
	kW	A	%		
Helix V 5202/2/K/CE+	5.5	10.1	85.2	86.9	88.1
Helix V 5202/K/CE+	7.5	13.5	88.5	89.9	89.5
Helix V 5203/2/K/CE+	11	20	87.5	89.3	89.4
Helix V 5203/K/CE+	11	20	87.5	89.3	89.4
Helix V 5204/2/K/CE+	15	26.2	88.4	90.2	90.3
Helix V 5204/K/CE+	15	26.2	88.4	90.2	90.3
Helix V 5205/2/K/CE+	18.5	32	89.0	90.8	90.9
Helix V 5205/K/CE+	18.5	32	89.0	90.8	90.9
Helix V 5206/2/K/CE+	22	38	89.5	90.9	91.3

Motor efficiency based on 400 V, 50 Hz

Technical data Wilo-Economy CO-1 Helix V.../CE+

Dimension drawing I

Wilo-Comfort CO-1 Helix V 5202/2...5206/2/CE+

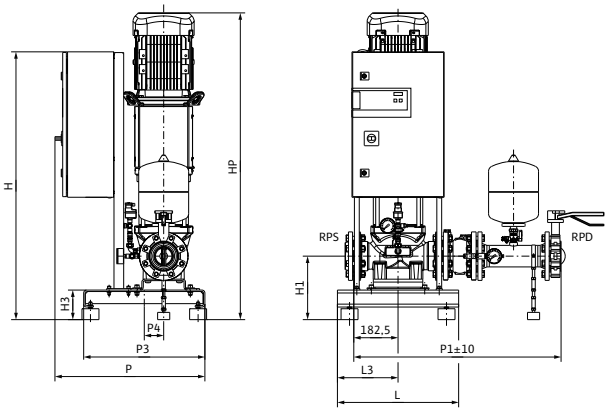

Sample systems are shown. Switchbox position depends on pump height.
Accessories (to be ordered separately): Optional WMS low-water cut-out switchgear kit
Installation surface: flat and horizontal
Installation location: dry, well ventilated and frost-proof

Dimensions, weights

Wilo-Economy CO-1...	Nominal diameters of the pipe connections on suction side	Nominal diameters of pipe connections on the pressure side	Dimensions									Weight approx.
	RPS	*RPD*	*H*	*H1*	*H3*	*HP*	*L*	*L3*	*P*	*P1*	*P3*	*m*
			mm									kg
Helix V 5202/2/K/CE+	DN 80	DN 80	1105	262	122	1266	500	250	625	855	500	192
Helix V 5202/K/CE+	DN 80	DN 80	1105	262	122	1266	500	250	625	855	500	199
Helix V 5203/2/K/CE+	DN 80	DN 80	1105	262	122	1511	800	400	835	855	800	235
Helix V 5203/K/CE+	DN 80	DN 80	1105	262	122	1511	800	400	835	855	800	235
Helix V 5204/2/K/CE+	DN 80	DN 80	1105	262	122	1611	800	400	835	855	800	251
Helix V 5204/K/CE+	DN 80	DN 80	1105	262	122	1611	800	400	835	855	800	251
Helix V 5205/2/K/CE+	DN 80	DN 80	1105	262	122	1711	800	400	835	855	800	289
Helix V 5205/K/CE+	DN 80	DN 80	1105	262	122	1711	800	400	835	855	800	289
Helix V 5206/2/K/CE+	DN 80	DN 80	1105	262	122	1854	800	400	835	855	800	315

Pressure boosting

Single pump systems with fixed speed

Series description Wilo-Economy CO-1 MVI.../ER

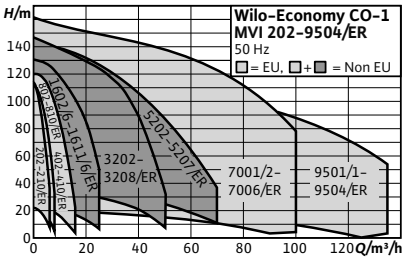

Design

Water-supply unit with a non-self-priming high-pressure multistage centrifugal pump

Type key

Example:	**Wilo-CO-1 MVI 204/ER**
CO	Compact pressure boosting system
1	With one pump
MVI	Pump series
2	Nominal volume flow of the single pump [m^3/h]
04	Number of single-pump stages
ER	Control device; ER = Economy-Controller

Application

- Fully automatic water supply in inlet mode, either from the public water supply network or from a tank.
- Pumping of potable water, process water, cooling water, water for fire-fighting or other water mixtures that do not chemically or mechanically attack the materials used and do not contain abrasive or long-fibre constituents

Special features/product advantages

- Sturdy system due to stainless steel high-pressure multistage centrifugal pumps of the MVI series
- IEC three-phase motors (Level IE2), from 0.75 kW, 2-pole
- Wide hydraulic range through the use of all pumps in the MVI series
- Easily adjustable and operationally reliable due to the ER-1 control unit used
- Customised units on request

Technical data

- Mains connection 3~230/400 V ±10%, 50 Hz (other versions on request)
- Max. fluid temperature 50 °C (70 °C optional)
- Max. ambient temperature 40 °C
- Operating pressure 16 bar
- Inlet pressure 6 bar
- Switching pressure stages 6/10/16 bar
- Nominal connection diameters on inlet side Rp 1¼" - DN 100
- Nominal connection diameters on discharge side R 1¼" - DN 100
- Nominal speed 2800 rpm
- Protection class IP 41 (ER-1), IP 54 (ER-1 ≥ 5.5 kW)
- Fuse protection on mains side AC 3 according to motor power and EVU regulations
- Approved fluids (other fluids on request):
  - Pure water without settling sediments
  - Process water, cold water, cooling water and rainwater
  - Potable water
  - Fire water
- Note on fluids: Approved fluids are generally waters which do not attack the materials used, neither chemically nor mechanically, and do not contain any abrasive or long-fibre constituents.

Equipment/function

- 1 pump of MVI series
- Maximum stage number: 11
- Components that come in contact with fluid are corrosion-resistant
- Base frame made of stainless steel, galvanised (CO-1 MVI 52/95..: steel, painted)
- Height-adjustable vibration absorbers for insulation against structure-borne noise
- Check valve, pressure side
- Non-return valve, on the pressure side
- Diaphragm pressure vessel 8 l, PN16, pressure side

Materials

MVI 1.. to 16..-6

- Impellers and stage chambers made of 1.4301/1.4404 stainless steel (MVI 16..-6 only in 1.4301)
- Pump housing made of 1.4301/1.4404 stainless steel
- Shaft 1.4301/1.4404 stainless steel
- Gasket EPDM (EP 851) / FKM (Viton)
- Housing cover made of 1.4301/1.4404 stainless steel
- Housing bottom 1.4301/1.4404 stainless steel
- Mechanical seal B-carbon/tungsten carbide, SiC/carbon
- Pressure shroud 1.4301/1.4404 stainless steel
- Bearing tungsten carbide
- Pump base EN-GJL-250
- Pipework made of 1.4571 stainless steel

MVI 16.. to 95..

- Impellers 1.4301/1.4404 stainless steel
- Stage chambers 1.4301/1.4404 stainless steel
- Pump housing EN-GJL-250/1.4404
- Shaft 1.4057/1.4404 stainless steel
- Gasket EPDM (EP 851) / FKM (Viton)
- Housing cover made of 1.4301/1.4404 stainless steel

Series description Wilo-Economy CO-1 MVI.../ER

- Housing bottom 1.4301/1.4404 stainless steel
- Mechanical seal B-carbon/tungsten carbide, SiC/carbon
- Pressure shroud 1.4301/1.4404 stainless steel
- Bearing tungsten carbide
- Pipework made of 1.4571 stainless steel

Description/design

- Connection-ready water-supply unit, mounted on base frame made of stainless steel or painted steel (MVI 52..) including vibration absorber, complete pipework made of stainless steel, including all necessary fittings and check valves (except for inlet-side check valve), pressure control kit, stainless steel high-pressure multistage centrifugal pump (MVI) and ER-1 switchgear, mounted, wired and ready for connection. Trip electronics in switchgear for low-water cut-out.
- Diaphragm pressure vessel: 8l/PN 16 located on the discharge side with a butyl rubber diaphragm, completely safe in accordance with food safety laws; for testing and inspection purposes, with shut-off ball cock, with drain and throughflow fitting according to DIN 4807
- Switchgear: the system is standard-equipped with an ER-1 Economy Controller

Scope of delivery

- Factory-mounted, connection-ready pressure boosting system checked for functionality and impermeability
- Packaging
- Installation and operating instructions

Note

Pressure boosting systems with other sizes of the installed pumps (MVI 16..-6, MVI 16, MVI 32 and MVI 52) are offered only outside the EU member states. Information on these products is available **on request**.

Electrical connection

3~400 V ≤ 4 kW/10A

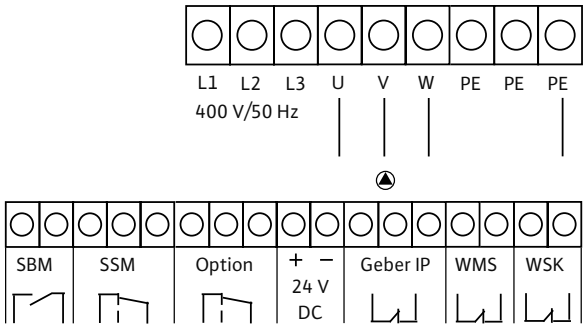

Electrical connection

3~400 V ≥ 5.5 - 22 kW

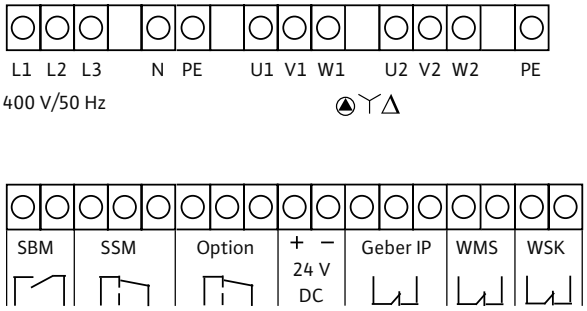

Technical data Wilo-Economy CO-1 MVI.../ER

Pump curves

Wilo-Economy CO-1 MVI 202/ER - 210/ER

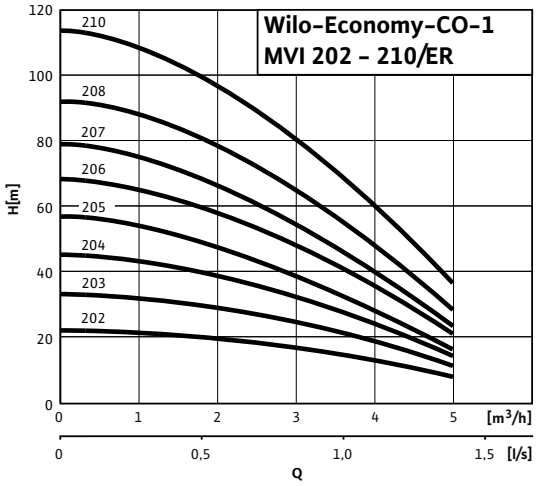

Motor data						
Wilo-Economy CO-1...	**Nominal motor power**	**Nominal current 3~230 V, 50 Hz**	**Nominal current 3~400 V, 50 Hz**	**Motor efficiency**		
	P_2	I_N		$\eta_{m\ 50\%}$	$\eta_{m\ 75\%}$	$\eta_{m\ 100\%}$
	kW	A		%		
MVI 202/ER	0.37	1.69	0.97	71.0	72.8	72.8
MVI 203/ER	0.55	2.27	1.31	73.0	75.0	75.5
MVI 204/ER	0.75	3.06	1.77	76.0	77.4	77.4
MVI 205/ER	0.75	3.06	1.77	76.0	77.4	77.4
MVI 206/ER	1.1	4.4	2.6	78.0	79.6	79.6
MVI 207/ER	1.1	4.4	2.6	78.0	79.6	79.6
MVI 208/ER	1.5	5.7	3.3	80.0	81.3	81.3
MVI 210/ER	1.5	5.7	3.3	80.0	81.3	81.3

Motor efficiency based on 400 V, 50 Hz

Technical data Wilo-Economy CO-1 MVI.../ER

Dimension drawing

Wilo-Economy CO-1 MVI 202/ER...810/ER

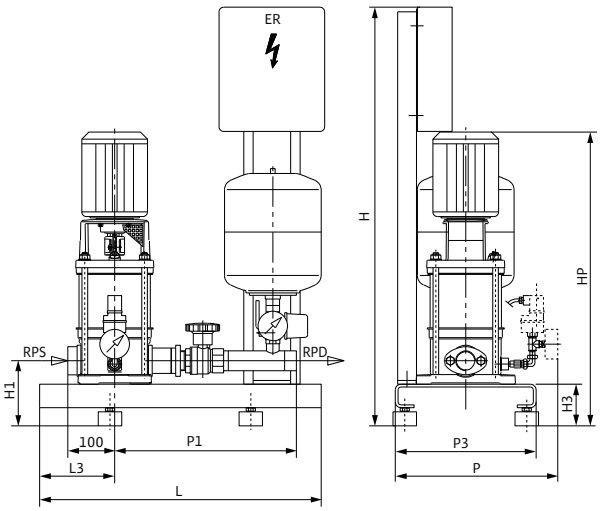

Sample systems are shown. Switchbox position depends on pump height.
Accessories (to be ordered separately): Optional WMS low-water cut-out switchgear kit
Installation surface: flat and horizontal
Installation location: dry, well ventilated and frost-proof

Dimensions, weights

Wilo-Economy CO-1...	Nominal diameters of the pipe connections on suction side	Nominal diameters of pipe connections on the pressure side	Dimensions									Weight approx.
	RPS	*RPD*	*H*	*H1*	*H3*	*HP*	*L*	*L3*	*P*	*P1*	*P3*	*m*
			mm									kg
MVI 202/ER	Rp 1¼	R 1¼	1000	140	90	607	600	160	340	490	300	43
MVI 203/ER	Rp 1¼	R 1¼	1000	140	90	607	600	160	340	490	300	44
MVI 204/ER	Rp 1¼	R 1¼	1000	140	90	661	600	160	340	490	300	48
MVI 205/ER	Rp 1¼	R 1¼	1000	140	90	685	600	160	340	490	300	49
MVI 206/ER	Rp 1¼	R 1¼	1000	140	90	709	600	160	340	490	300	50
MVI 207/ER	Rp 1¼	R 1¼	1000	140	90	733	600	160	340	490	300	51
MVI 208/ER	Rp 1¼	R 1¼	1000	140	90	807	600	160	340	490	300	60
MVI 210/ER	Rp 1¼	R 1¼	1000	140	90	855	600	160	340	490	300	61

Technical data Wilo-Economy CO-1 MVI.../ER

Pump curves

Wilo-Economy CO-1 MVI 402/ER - 410/ER

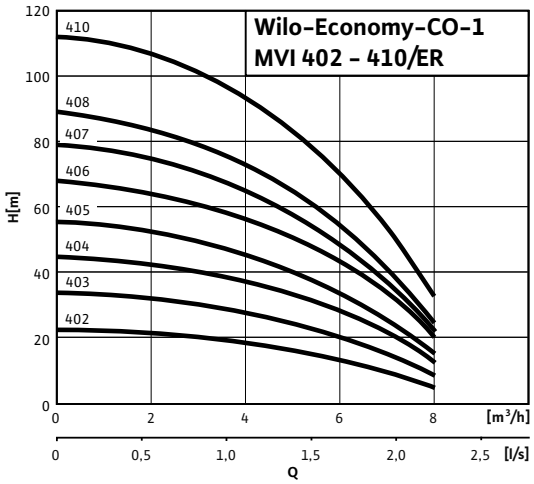

Motor data						
Wilo-Economy CO-1...	**Nominal motor power**	**Nominal current 3~230 V, 50 Hz**	**Nominal current 3~400 V, 50 Hz**	**Motor efficiency**		
	P_2	I_N		$\eta_{m\ 50\%}$	$\eta_{m\ 75\%}$	$\eta_{m\ 100\%}$
	kW	A		%		
MVI 402/ER	0.55	2.27	1.31	73.0	75.0	75.5
MVI 403/ER	0.75	3.06	1.77	76.0	77.4	77.4
MVI 404/ER	1.1	4.4	2.6	78.0	79.6	79.6
MVI 405/ER	1.1	4.4	2.6	78.0	79.6	79.6
MVI 406/ER	1.5	5.7	3.3	80.0	81.3	81.3
MVI 407/ER	1.5	5.7	3.3	80.0	81.3	81.3
MVI 408/ER	2.2	8	4.6	82.0	83.2	83.2
MVI 410/ER	2.2	8	4.6	82.0	83.2	83.2

Motor efficiency based on 400 V, 50 Hz

Technical data Wilo-Economy CO-1 MVI.../ER

Dimension drawing

Wilo-Economy CO-1 MVI 202/ER...810/ER

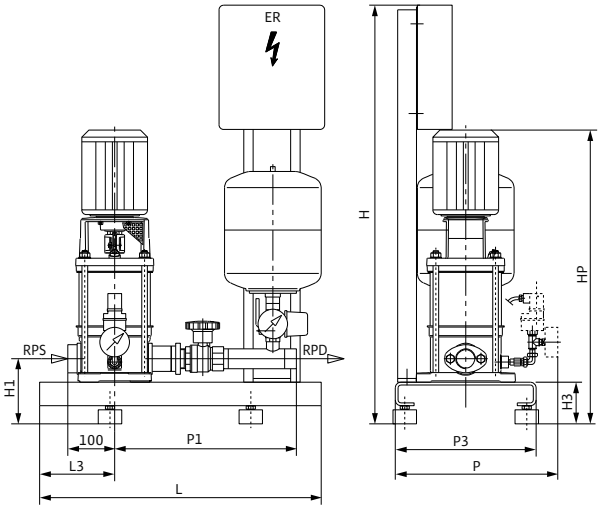

Sample systems are shown. Switchbox position depends on pump height.
Accessories (to be ordered separately): Optional WMS low-water cut-out switchgear kit
Installation surface: flat and horizontal
Installation location: dry, well ventilated and frost-proof

Dimensions, weights

Wilo-Economy CO-1...	Nominal diameters of the pipe connections on suction side	Nominal diameters of pipe connections on the pressure side	Dimensions									Weight approx.
	RPS	*RPD*	*H*	*H1*	*H3*	*HP*	*L*	*L3*	*P*	*P1*	*P3*	*m*
			mm									kg
MVI 402/ER	Rp 1¼	R 1¼	1000	140	90	633	600	160	340	490	300	44
MVI 403/ER	Rp 1¼	R 1¼	1000	140	90	637	600	160	340	490	300	48
MVI 404/ER	Rp 1¼	R 1¼	1000	140	90	661	600	160	340	490	300	49
MVI 405/ER	Rp 1¼	R 1¼	1000	140	90	685	600	160	340	490	300	50
MVI 406/ER	Rp 1¼	R 1¼	1000	140	90	759	600	160	340	490	300	58
MVI 407/ER	Rp 1¼	R 1¼	1000	140	90	783	600	160	340	490	300	59
MVI 408/ER	Rp 1¼	R 1¼	1000	140	90	807	600	160	340	490	300	60
MVI 410/ER	Rp 1¼	R 1¼	1000	140	90	855	600	160	340	490	300	61

Technical data Wilo-Economy CO-1 MVI.../ER

Pump curves

Wilo-Economy CO-1 MVI 802/ER - 810/ER

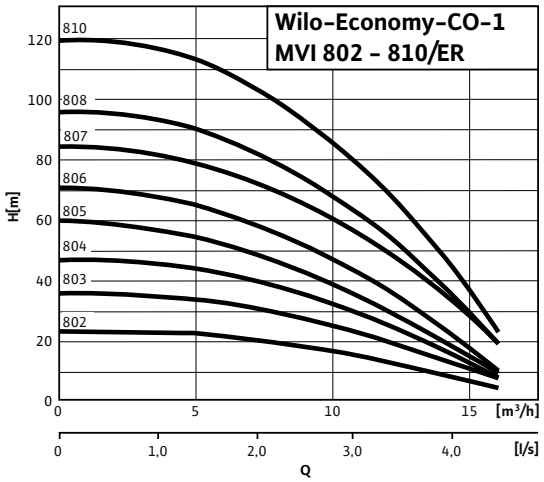

Motor data

Wilo-Economy CO-1...	Nominal motor power	Nominal current 3~230 V, 50 Hz	Nominal current 3~400 V, 50 Hz	Motor efficiency		
	P_2	I_N		$\eta_{m\ 50\%}$	$\eta_{m\ 75\%}$	$\eta_{m\ 100\%}$
	kW	A		%		
MVI 802/ER	0.75	3.06	1.77	76.0	77.4	77.4
MVI 803/ER	1.1	4.4	2.6	78.0	79.6	79.6
MVI 804/ER	1.5	5.7	3.3	80.0	81.3	81.3
MVI 805/ER	2.2	8	4.6	82.0	83.2	83.2
MVI 806/ER	2.2	8	4.6	82.0	83.2	83.2
MVI 807/ER	3	11.6	6.7	82.5	85.0	84.6
MVI 808/ER	3	11.6	6.7	82.5	85.0	84.6
MVI 810/ER	4	13.5	7.8	85.0	85.8	85.8

Motor efficiency based on 400 V, 50 Hz

Technical data Wilo-Economy CO-1 MVI.../ER

Dimension drawing

Wilo-Economy CO-1 MVI 202/ER...810/ER

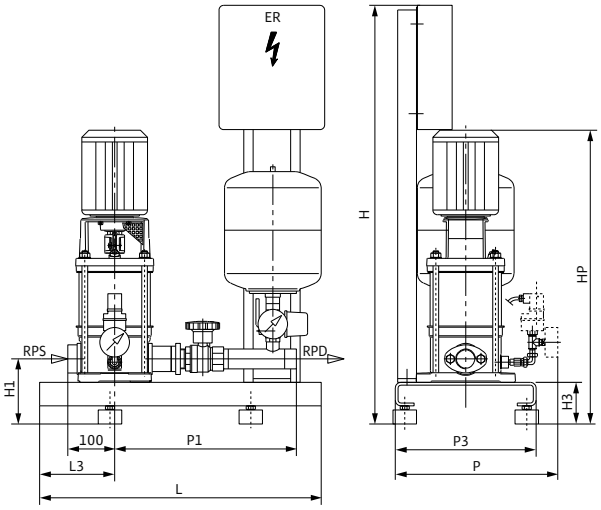

Sample systems are shown. Switchbox position depends on pump height.
Accessories (to be ordered separately): Optional WMS low-water cut-out switchgear kit
Installation surface: flat and horizontal
Installation location: dry, well ventilated and frost-proof

Dimensions, weights

Wilo-Economy CO-1...	Nominal diameters of the pipe connections on suction side	Nominal diameters of pipe connections on the pressure side	Dimensions									Weight approx.
	RPS	*RPD*	*H*	*H1*	*H3*	*HP*	*L*	*L3*	*P*	*P1*	*P3*	*m*
			mm									kg
MVI 802/ER	Rp 1½	R 1¼	1000	170	90	664	600	160	340	560	300	50
MVI 803/ER	Rp 1½	R 1¼	1000	170	90	694	600	160	340	560	300	51
MVI 804/ER	Rp 1½	R 1¼	1000	170	90	774	600	160	340	560	300	59
MVI 805/ER	Rp 1½	R 1¼	1000	170	90	804	600	160	340	560	300	60
MVI 806/ER	Rp 1½	R 1¼	1000	170	90	834	600	160	340	560	300	62
MVI 807/ER	Rp 1½	R 1¼	1000	170	90	914	600	160	340	560	300	67
MVI 808/ER	Rp 1½	R 1¼	1000	170	90	944	600	160	340	560	300	68
MVI 810/ER	Rp 1½	R 1¼	1000	170	90	1009	600	160	340	560	300	77

Technical data Wilo-Economy CO-1 MVI.../ER

Pump curves

Wilo-Economy CO-1 MVI 1602-6 - 1611-6/ER

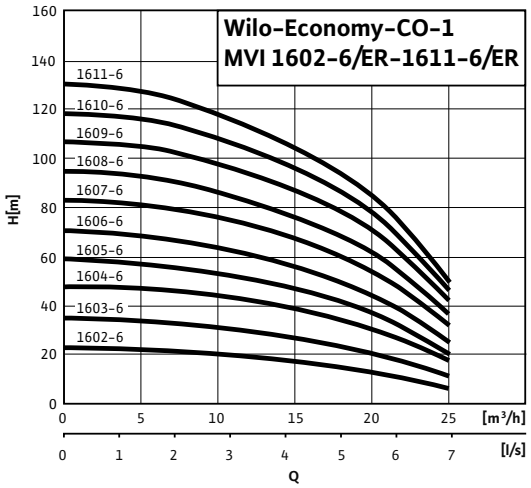

Motor data						
Wilo-Economy CO-1...	**Nominal motor power**	**Nominal current 3~230 V, 50 Hz**	**Nominal current 3~400 V, 50 Hz**	**Motor efficiency**		
	P_2	I_N		$\eta_{m\ 50\%}$	$\eta_{m\ 75\%}$	$\eta_{m\ 100\%}$
	kW	A		%		
MVI 1602-6/ER	1.5	5.7	3.3	80.0	81.3	81.3
MVI 1603-6/ER	2.2	8	4.6	82.0	83.2	83.2
MVI 1604-6/ER	3	11.6	6.7	82.5	85.0	84.6
MVI 1605-6/ER	4	13.5	7.8	85.0	85.8	85.8
MVI 1606-6/ER	4	13.5	7.8	85.0	85.8	85.8
MVI 1607-6/ER	5.5	–	10.7	85.2	86.9	88.1
MVI 1608-6/ER	5.5	–	10.7	85.2	86.9	88.1
MVI 1609-6/ER	7.5	–	14	88.5	89.9	89.5
MVI 1610-6/ER	7.5	–	14	88.5	89.9	89.5
MVI 1611-6/ER	7.5	–	14	88.5	89.9	89.5

Motor efficiency based on 400 V, 50 Hz

Technical data Wilo-Economy CO-1 MVI.../ER

Dimension drawing

Wilo-Economy CO-1 MVI 1602-6/ER...1611-6/ER

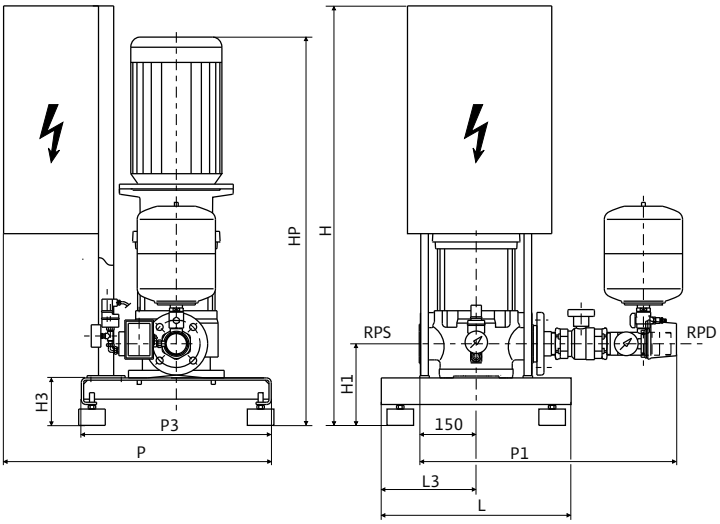

Sample systems are shown. Switchbox position depends on pump height.
Accessories (to be ordered separately): Optional WMS low-water cut-out switchgear kit
Installation surface: flat and horizontal
Installation location: dry, well ventilated and frost-proof

Dimensions, weights

Wilo-Economy CO-1...	Nominal diameters of the pipe connections on suction side	Nominal diameters of pipe connections on the pressure side	Dimensions									Weight approx.
	RPS	*RPD*	*H*	*H1*	*H3*	*HP*	*L*	*L3*	*P*	*P1*	*P3*	*m*
			mm									kg
MVI 1602-6/ER	DN 50	R 2	1240	215	125	774	500	250	550	665	500	96
MVI 1603-6/ER	DN 50	R 2	1240	215	125	849	500	250	550	665	500	100
MVI 1604-6/ER	DN 50	R 2	1240	215	125	899	500	250	550	665	500	106
MVI 1605-6/ER	DN 50	R 2	1240	215	125	974	500	250	550	665	500	116
MVI 1606-6/ER	DN 50	R 2	1240	215	125	1055	500	250	550	665	500	117
MVI 1607-6/ER	DN 50	R 2	1100	215	125	1129	500	250	705	665	500	119
MVI 1608-6/ER	DN 50	R 2	1100	215	125	1129	500	250	705	665	500	120
MVI 1609-6/ER	DN 50	R 2	1100	215	125	1223	500	250	705	665	500	140
MVI 1610-6/ER	DN 50	R 2	1100	215	125	1223	500	250	705	665	500	141
MVI 1611-6/ER	DN 50	R 2	1100	215	125	1298	500	250	705	665	500	143

Technical data Wilo-Economy CO-1 MVI.../ER

Pump curves

Wilo-Economy CO-1 MVI 3202/ER - 3208/ER

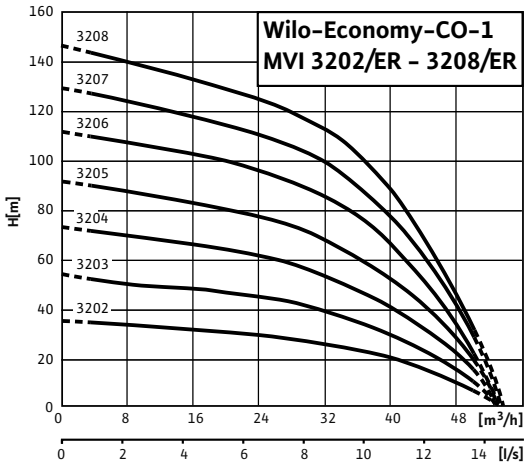

Motor data						
Wilo-Economy CO-1...	**Nominal motor power**	**Nominal current 3~230 V, 50 Hz**	**Nominal current 3~400 V, 50 Hz**	**Motor efficiency**		
	P_2	I_N		$\eta_{m\ 50\%}$	$\eta_{m\ 75\%}$	$\eta_{m\ 100\%}$
	kW	A		%		
MVI 3202/ER	4	13.5	7.8	85.0	85.8	85.8
MVI 3203/ER	5.5	–	10.7	85.2	86.9	88.1
MVI 3204/ER	7.5	–	14	88.5	89.9	89.5
MVI 3205/ER	9	–	16.3	86.6	88.4	88.8
MVI 3206/ER	11	–	20.2	87.5	89.3	89.4
MVI 3207/ER	15	–	25.7	88.4	90.2	90.3
MVI 3208/ER	15	–	25.7	88.4	90.2	90.3

Motor efficiency based on 400 V, 50 Hz

Technical data Wilo-Economy CO-1 MVI.../ER

Dimension drawing

Wilo-Economy CO-1 MVI 3202/ER...3208/ER

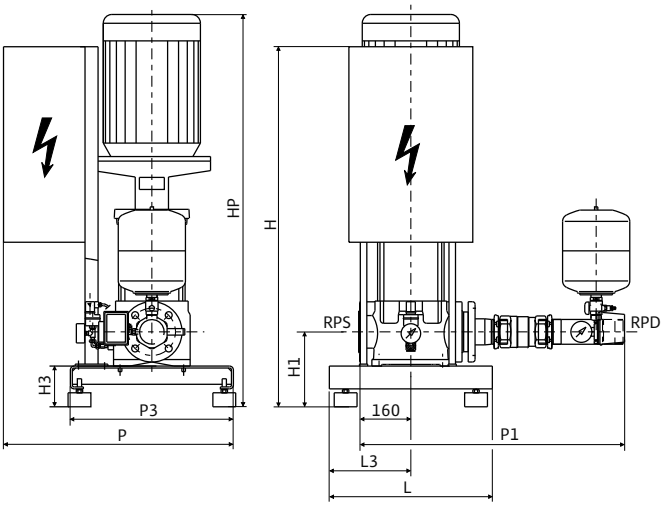

Sample systems are shown. Switchbox position depends on pump height.
Accessories (to be ordered separately): Optional WMS low-water cut-out switchgear kit
Installation surface: flat and horizontal
Installation location: dry, well ventilated and frost-proof

Dimensions, weights

Wilo-Economy CO-1...	Nominal diameters of the pipe connections on suction side	Nominal diameters of pipe connections on the pressure side	Dimensions									Weight approx.
	RPS	*RPD*	*H*	*H1*	*H3*	*HP*	*L*	*L3*	*P*	*P1*	*P3*	*m*
			mm									kg
MVI 3202/ER	DN 65	R 2½	1100	230	125	965	500	250	705	815	500	134
MVI 3203/ER	DN 65	R 2½	1100	230	125	1015	500	250	705	815	500	135
MVI 3204/ER	DN 65	R 2½	1100	230	125	1080	500	250	705	815	500	158
MVI 3205/ER	DN 65	R 2½	1100	230	125	1220	500	250	705	815	500	177
MVI 3206/ER	DN 65	R 2½	1100	230	125	1220	500	250	705	815	500	177
MVI 3207/ER	DN 65	R 2½	1100	230	125	1440	500	250	705	815	500	212
MVI 3208/ER	DN 65	R 2½	1100	245	125	1455	500	250	705	815	500	216

Technical data Wilo-Economy CO-1 MVI.../ER

Pump curves

Wilo-Economy CO-1 MVI 5202/ER - 5207/ER

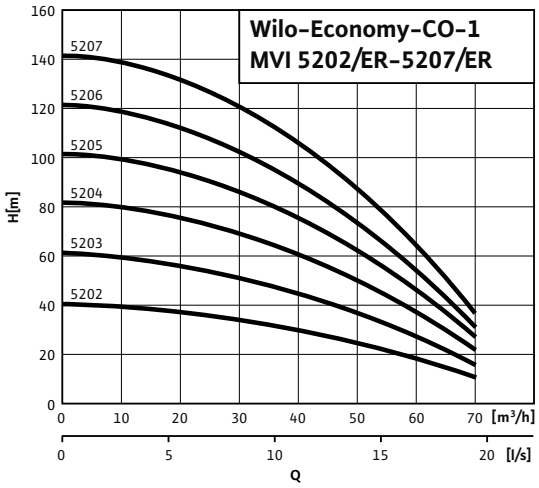

Motor data						
Wilo-Economy CO-1...	**Nominal motor power**	**Nominal current 3~230 V, 50 Hz**	**Nominal current 3~400 V, 50 Hz**	**Motor efficiency**		
	P_2	I_N		$\eta_{m\ 50\%}$	$\eta_{m\ 75\%}$	$\eta_{m\ 100\%}$
	kW	A		%		
MVI 5202/ER	5.5	–	10.7	85.2	86.9	88.1
MVI 5203/ER	7.5	–	14	88.5	89.9	89.5
MVI 5204/ER	11	–	20.2	87.5	89.3	89.4
MVI 5205/ER	15	–	25.7	88.4	90.2	90.3
MVI 5206/ER	15	–	25.7	88.4	90.2	90.3
MVI 5207/ER	18.5	–	31.4	89.0	90.8	90.9

Motor efficiency based on 400 V, 50 Hz

Technical data Wilo-Economy CO-1 MVI.../ER

Dimension drawing

Wilo-Economy CO-1 MVI 5202/ER...5207/ER

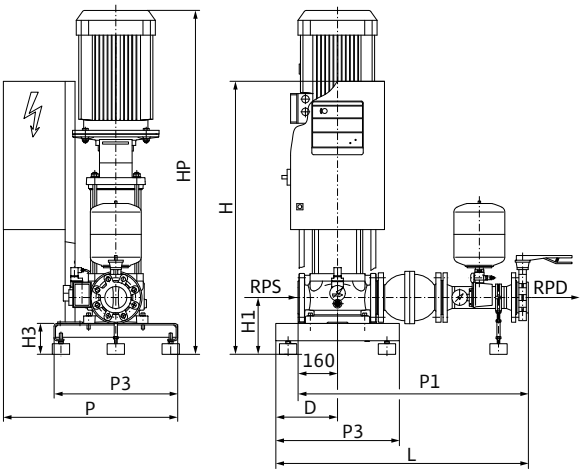

Sample systems are shown. Switchbox position depends on pump height.
Accessories (to be ordered separately): Optional WMS low-water cut-out switchgear kit
Installation surface: flat and horizontal
Installation location: dry, well ventilated and frost-proof

Dimensions, weights

Wilo-Economy CO-1...	Nominal diameters of the pipe connections on suction side	Nominal diameters of pipe connections on the pressure side	Dimensions									Weight approx.
	RPS	*RPD*	*H*	*H1*	*H3*	*HP*	*L*	*L3*	*P*	*P1*	*P3*	*m*
			mm									kg
MVI 5202/ER	DN 80	DN 80	1100	230	125	997	500	250	740	935	500	147
MVI 5203/ER	DN 80	DN 80	1100	230	125	1078	500	250	740	935	500	170
MVI 5204/ER	DN 80	DN 80	1100	230	125	1189	500	250	740	935	500	188
MVI 5205/ER	DN 80	DN 80	1100	240	125	1402	800	400	890	935	800	246
MVI 5206/ER	DN 80	DN 80	1100	240	125	1402	800	400	890	935	800	247
MVI 5207/ER	DN 80	DN 80	1100	240	125	1584	800	400	890	935	800	268

Technical data Wilo-Economy CO-1 MVI.../ER

Pump curves

Wilo-Economy CO-1 MVI 7001 - 7006

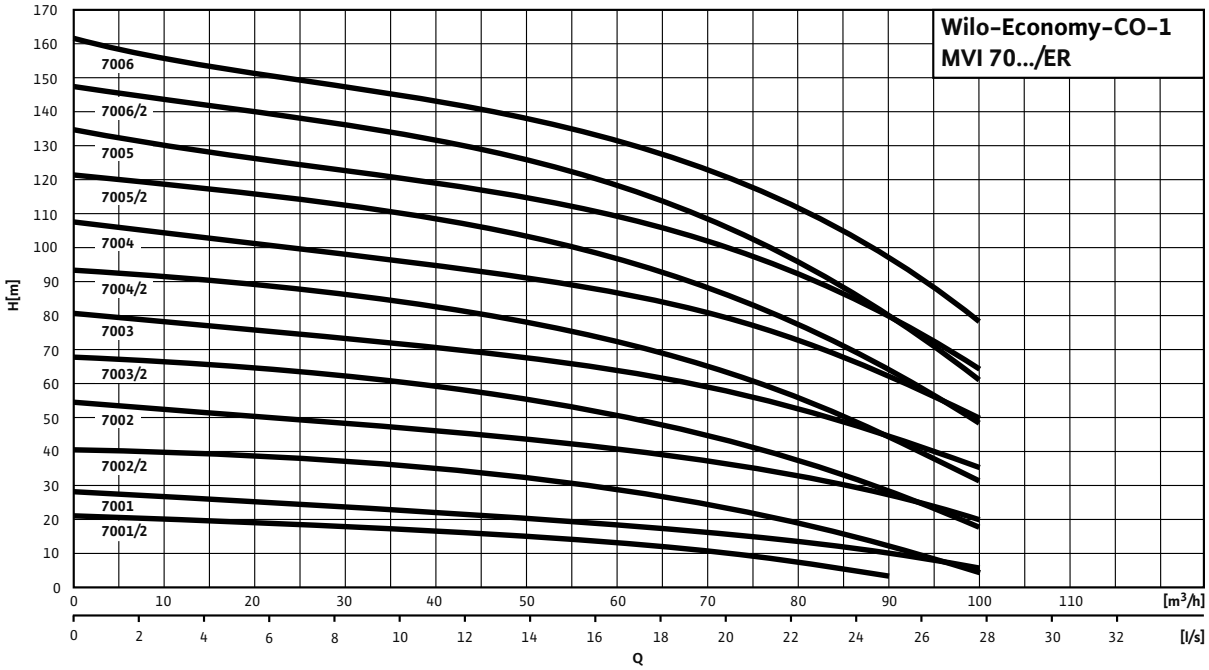

Motor data						
Wilo-Economy CO-1...	**Nominal motor power**	**Nominal current 3~230 V, 50 Hz**	**Nominal current 3~400 V, 50 Hz**	**Motor efficiency**		
	P_2	I_N		$\eta_{m\ 50\%}$	$\eta_{m\ 75\%}$	$\eta_{m\ 100\%}$
	kW	A		%		
MVI 7001/1/ER	4	13.5	7.8	85.0	85.8	85.8
MVI 7001/ER	5.5	–	10.7	85.2	86.9	88.1
MVI 7002/2/ER	7.5	–	14	88.5	89.9	89.5
MVI 7002/ER	11	–	19.4	87.5	89.3	89.4
MVI 7003/2/ER	15	–	25.7	88.4	90.2	90.3
MVI 7003/ER	18.5	–	31.4	89.0	90.8	90.9
MVI 7004/2/ER	18.5	–	31.4	89.0	90.8	90.9
MVI 7004/ER	22	–	37.5	89.5	90.9	91.3
MVI 7005/2/ER	30	–	55.1	90.3	91.8	92.0
MVI 7005/ER	30	–	55.1	90.3	91.8	92.0
MVI 7006/2/ER	30	–	55.1	90.3	91.8	92.0
MVI 7006/ER	37	–	70	90.1	91.9	92.5

Motor efficiency based on 400 V, 50 Hz

Technical data Wilo-Economy CO-1 MVI.../ER

Dimension drawing

Wilo-Economy CO-1 MVI 7001/1/ER...7006/ER, 9501/1/ER...9504/ER

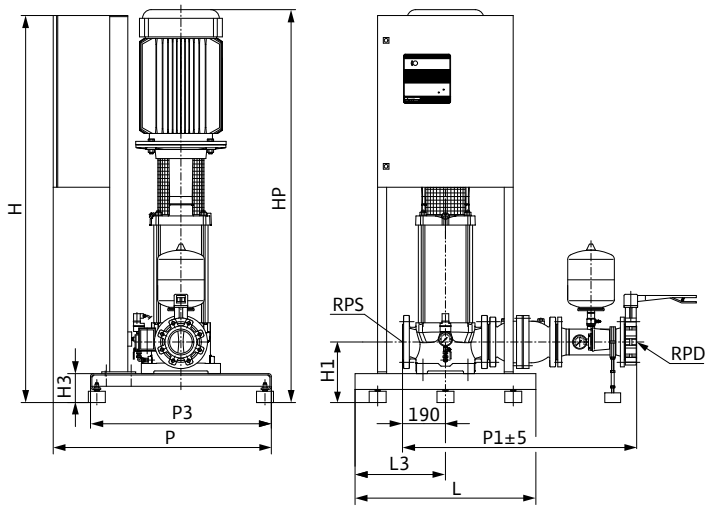

Sample systems are shown. Switchbox position depends on pump height.
Accessories (to be ordered separately): Optional WMS low-water cut-out switchgear kit
Installation surface: flat and horizontal
Installation location: dry, well ventilated and frost-proof

Dimensions, weights

Wilo-Economy CO-1...	Nominal diameters of the pipe connections on suction side	Nominal diameters of pipe connections on the pressure side	Dimensions									Weight approx.
	RPS	*RPD*	*H*	*H1*	*H3*	*HP*	*L*	*L3*	*P*	*P1*	*P3*	*m*
			mm									kg
MVI 7001/1/ER	DN 100	DN 100	1100	268	128	959	800	400	800	1036	800	223.5
MVI 7001/ER	DN 100	DN 100	1100	268	128	1003	800	400	965	1036	800	245.5
MVI 7002/2/ER	DN 100	DN 100	1100	268	128	1133	800	400	965	1036	800	270
MVI 7002/ER	DN 100	DN 100	1100	268	128	1168	800	400	965	1036	800	280
MVI 7003/2/ER	DN 100	DN 100	1100	268	128	1446	800	400	965	1036	800	313
MVI 7003/ER	DN 100	DN 100	1100	268	128	1465	800	400	965	1036	800	328
MVI 7004/2/ER	DN 100	DN 100	1100	268	128	1550	800	400	965	1036	800	332
MVI 7004/ER	DN 100	DN 100	1100	268	128	1574	800	400	965	1036	800	355
MVI 7005/2/ER	DN 100	DN 100	1713	268	128	1739	800	400	965	1036	800	412
MVI 7005/ER	DN 100	DN 100	1713	268	128	1739	800	400	965	1036	800	412
MVI 7006/2/ER	DN 100	DN 100	1713	268	128	1824	800	400	965	906	800	422
MVI 7006/ER	DN 100	DN 100	1713	268	128	1846	800	400	965	906	800	448

Technical data Wilo-Economy CO-1 MVI.../ER

Pump curves

Wilo-Economy CO-1 MVI 9501-9504

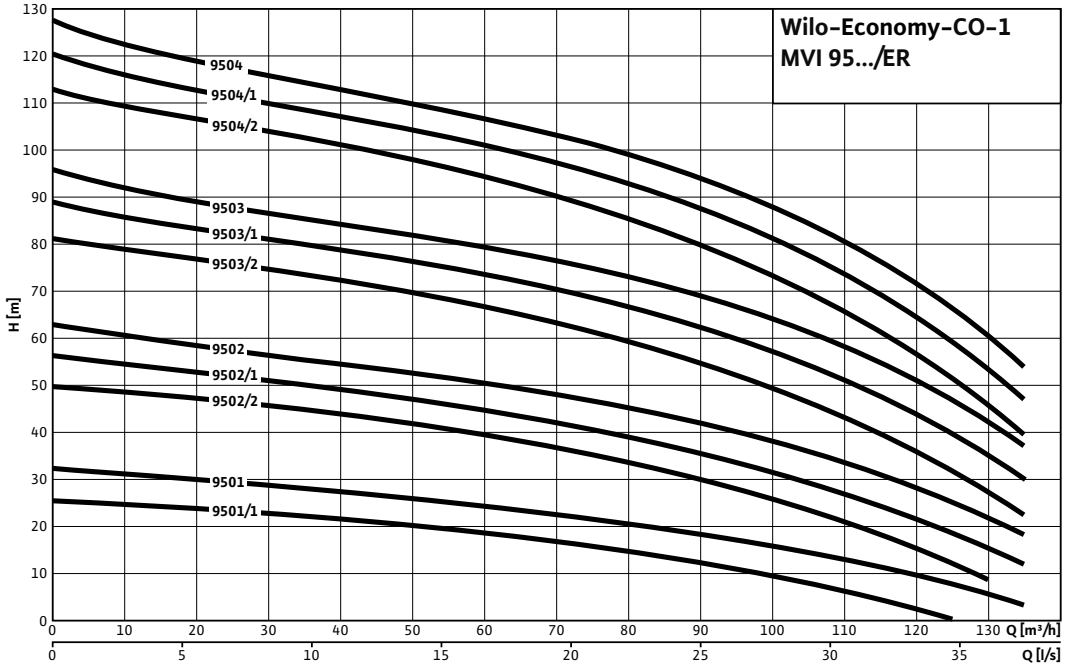

Motor data						
Wilo-Economy CO-1...	**Nominal motor power**	**Nominal current 3~230 V, 50 Hz**	**Nominal current 3~400 V, 50 Hz**	**Motor efficiency**		
	P_2	I_N		$\eta_{m\ 50\%}$	$\eta_{m\ 75\%}$	$\eta_{m\ 100\%}$
	kW	A		%		
MVI 9501/1/ER	7.5	–	14	88.5	89.9	89.5
MVI 9501/ER	9	–	16.3	86.6	88.4	88.8
MVI 9502/2/ER	15	–	25.7	88.4	90.2	90.3
MVI 9502/1/ER	15	–	25.7	88.4	90.2	90.3
MVI 9502/ER	18.5	–	31.4	89.0	90.8	90.9
MVI 9503/2/ER	22	–	37.5	89.5	90.9	91.3
MVI 9503/1/ER	30	–	55.1	90.3	91.8	92.0
MVI 9503/ER	30	–	55.1	90.3	91.8	92.0
MVI 9504/2/ER	30	–	55.1	90.3	91.8	92.0
MVI 9504/1/ER	37	–	70	90.1	91.9	92.5
MVI 9504/ER	37	–	70	90.1	91.9	92.5

Motor efficiency based on 400 V, 50 Hz

Technical data Wilo-Economy CO-1 MVI.../ER

Dimension drawing

Wilo-Economy CO-1 MVI 7001/1/ER...7006/ER, 9501/1/ER...9504/ER

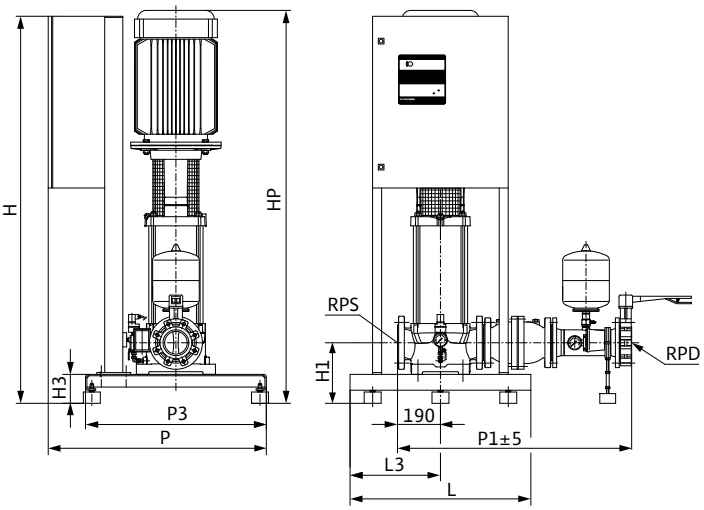

Sample systems are shown. Switchbox position depends on pump height.
Accessories (to be ordered separately): Optional WMS low-water cut-out switchgear kit
Installation surface: flat and horizontal
Installation location: dry, well ventilated and frost-proof

Dimensions, weights

Wilo-Economy CO-1...	Nominal diameters of the pipe connections on suction side	Nominal diameters of pipe connections on the pressure side	Dimensions									Weight approx.
	RPS	*RPD*	*H*	*H1*	*H3*	*HP*	*L*	*L3*	*P*	*P1*	*P3*	*m*
			mm									kg
MVI 9501/1/ER	DN 100	DN 100	1100	268	128	1061	800	400	965	1036	800	252
MVI 9501/ER	DN 100	DN 100	1100	268	128	1096	800	400	965	1036	800	262
MVI 9502/2/ER	DN 100	DN 100	1100	268	128	1387	800	400	965	1036	800	308
MVI 9502/1/ER	DN 100	DN 100	1100	268	128	1387	800	400	965	1036	800	308
MVI 9502/ER	DN 100	DN 100	1100	268	128	1406	800	400	965	1036	800	323
MVI 9503/2/ER	DN 100	DN 100	1100	268	128	1528	800	400	965	1036	800	350
MVI 9503/1/ER	DN 100	DN 100	1713	268	128	1608	800	400	965	1036	800	406
MVI 9503/ER	DN 100	DN 100	1713	268	128	1608	800	400	965	1036	800	406
MVI 9504/2/ER	DN 100	DN 100	1713	268	128	1706	800	400	965	1036	800	411
MVI 9504/1/ER	DN 100	DN 100	1713	268	128	1728	800	400	965	1036	800	433
MVI 9504/ER	DN 100	DN 100	1713	268	128	1728	800	400	965	1036	800	433

Pressure boosting

Single pump systems with fixed speed

Series description Wilo-Economy CO/T-1 MVI.../ER

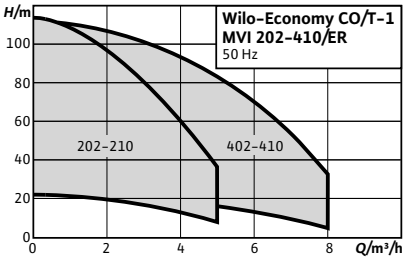

Design

Water-supply unit with system separation and a non-self-priming high-pressure multistage centrifugal pump

Type key

Example:	**Wilo-CO/T-1 MVI 204/ER**
CO	Compact pressure boosting system
T	With integrated break tank for system separation
1	With one pump
MVI	Pump series
2	Nominal volume flow of the single pump [m^3/h]
04	Number of single-pump stages
ER	Control device; ER = Economy-Controller

Application

- Fully automatic water supply including break tank for indirect connection to the public water supply network
- Pumping of potable water and process water, cooling water, water for fire-fighting or other water mixtures that do not chemically or mechanically attack the materials used and do not contain abrasive or long-fibre constituents

Special features/product advantages

- Compact ready for connection system for all applications that require system separation
- Sturdy system due to stainless steel high-pressure multistage centrifugal pumps of the MVI series
- IEC three-phase motors (Level IE2), from 0.75 kW, 2-pole
- Easily adjustable and operationally reliable due to the ER-1 control unit used

Technical data

- Mains connection 3~230/400 V ±10%, 50 Hz (other versions on request)
- Max. fluid temperature 50 °C (70 °C optional)
- Max. ambient temperature 40 °C
- Operating pressure 16 bar
- Inlet pressure 6 bar
- Switching pressure stages 6/10/16 bar
- Nominal connection diameters on discharge side R 1¼"
- Nominal connection diameters on inlet side R 1¼"
- Nominal speed 2900 rpm
- Protection class IP 41
- Switching capacity P_2 max. at max. 10 A = 4 kW (for > 4 kW downstream electromechanical power section)
- Fuse protection on mains side AC 3 according to motor power and EVU regulations
- Approved fluids (other fluids on request):
  - Pure water without settling sediments
  - Process water, cold water, cooling water and rainwater
  - Potable water
  - Fire water
- Note on fluids: Approved fluids are generally waters which do not attack the materials used, neither chemically nor mechanically, and do not contain any abrasive or long-fibre constituents.

Equipment/function

- 1 pump of MVI series
- Maximum stage number: 10
- PE preliminary tank, atmospherically ventilated (120 l)
- Components that come in contact with fluid are corrosion-resistant
- Check valve, on pressure side
- Non-return valve, on the pressure side
- Preliminary tank including float valve and float switch
- Diaphragm pressure vessel 8 l, PN16, pressure side
- Low-water cut-out switchgear

Materials

- Impellers and stage chambers 1.4301/1.4404 stainless steel
- Pump housing made of 1.4301/1.4404 stainless steel
- Shaft 1.4301/1.4404 stainless steel
- Gasket EPDM (EP 851) / FKM (Viton)
- Housing cover made of 1.4301/1.4404 stainless steel
- Housing bottom 1.4301/1.4404 stainless steel
- Mechanical seal B-carbon/tungsten carbide, SiC/carbon
- Pressure shroud 1.4301/1.4404 stainless steel
- Bearing, tungsten carbide
- Pump base EN-GJL-250
- Pipework made of 1.4571 stainless steel

Description/design

- Connection-ready water-supply unit, mounted on a PE base frame, complete pipework, including all necessary fittings and check valves (except for inlet-side check valve), pressure control kit, glanded (MVI series) stainless steel high-pressure multistage centrifugal pump and ER-1 switchgear, mounted, wired and ready for connection; trip electronics in switchgear for low-water cut-out

Series description Wilo-Economy CO/T-1 MVI.../ER

- Diaphragm pressure vessel: 8 l/PN 16 located on the discharge side with a butyl rubber diaphragm, completely safe in accordance with food safety laws; for testing and inspection purposes, with shut-off ball cock, with drain and throughflow fitting according to DIN 4807
- Switchgear: the system is standard-equipped with an ER-1 Economy Controller

Scope of delivery

- Factory-mounted, connection-ready pressure boosting system checked for functionality and impermeability
- Packaging
- Installation and operating instructions

Electrical connection

3~400 V ≤ 4 kW/10A

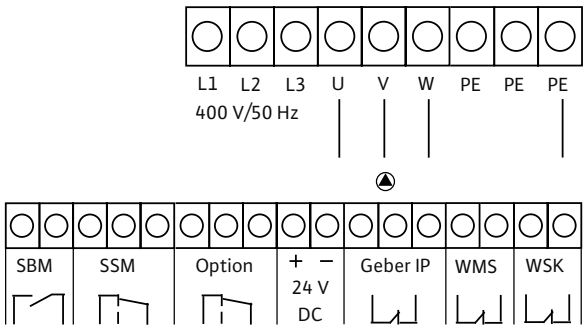

Technical data Wilo-Economy CO/T-1 MVI.../ER

Pump curves

Wilo-Economy CO/T-1 MVI 202/ER - 210/ER

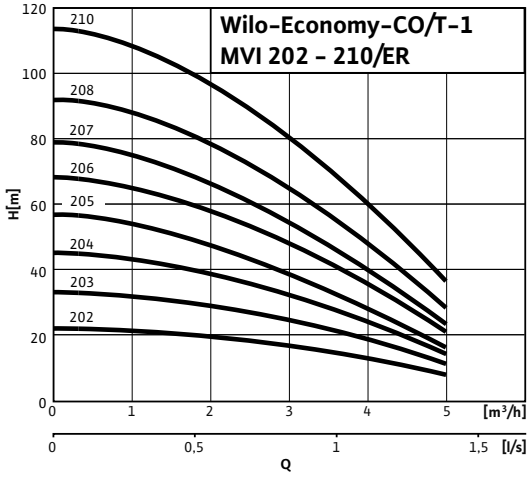

Motor data						
Wilo-Economy CO/T-1...	**Nominal motor power**	**Nominal current 3~230 V, 50 Hz**	**Nominal current 3~400 V, 50 Hz**	**Motor efficiency**		
	P_2	I_N		$\eta_{m\ 50\%}$	$\eta_{m\ 75\%}$	$\eta_{m\ 100\%}$
	kW	A		%		
MVI 202/ER	0.37	1.69	0.97	71.0	72.8	72.8
MVI 203/ER	0.55	2.27	1.31	73.0	75.0	75.5
MVI 204/ER	0.75	3.06	1.77	76.0	77.4	77.4
MVI 205/ER	0.75	3.06	1.77	76.0	77.4	77.4
MVI 206/ER	1.1	4.4	2.6	78.0	79.6	79.6
MVI 207/ER	1.1	4.4	2.6	78.0	79.6	79.6
MVI 208/ER	1.5	5.7	3.3	80.0	81.3	81.3
MVI 210/ER	1.5	5.7	3.3	80.0	81.3	81.3

Motor efficiency based on 400 V, 50 Hz

Technical data Wilo-Economy CO/T-1 MVI.../ER

Dimension drawing

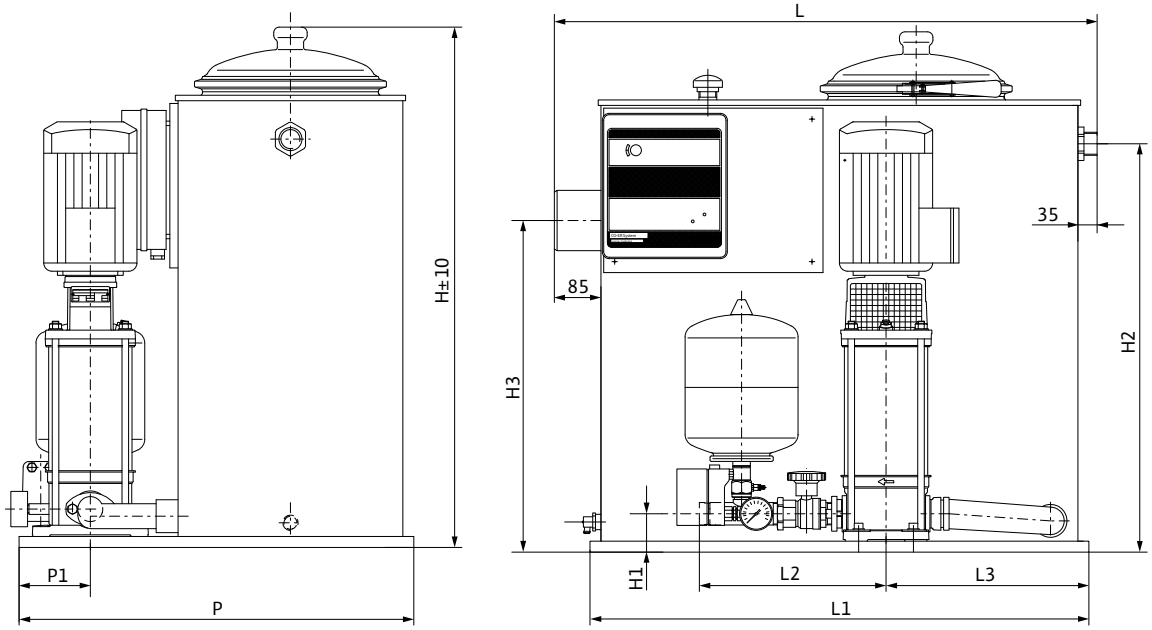

Dimensions, weights

Wilo-Economy CO/T-1...	Nominal diameters of the pipe connections on suction side	Nominal diameters of pipe connections on the pressure side	Dimensions										Weight approx.
	RPS	*RPD*	*H*	*H1*	*H2*	*H3*	*L*	*L1*	*L2*	*L3*	*P*	*P1*	*m*
			mm										kg
MVI 202/ER	Rp 1¼	R 1¼	945	70	745	605	990	910	350	370	720	130	68
MVI 203/ER	Rp 1¼	R 1¼	945	70	745	605	990	910	350	370	720	130	69
MVI 204/ER	Rp 1¼	R 1¼	945	70	745	605	990	910	350	370	720	130	73
MVI 205/ER	Rp 1¼	R 1¼	945	70	745	605	990	910	350	370	720	130	74
MVI 206/ER	Rp 1¼	R 1¼	945	70	745	605	990	910	350	370	720	130	75
MVI 207/ER	Rp 1¼	R 1¼	945	70	745	605	990	910	350	370	720	130	76
MVI 208/ER	Rp 1¼	R 1¼	945	70	745	605	990	910	350	370	720	130	85
MVI 210/ER	Rp 1¼	R 1¼	945	70	745	605	990	910	350	370	720	130	86

Technical data Wilo-Economy CO/T-1 MVI.../ER

Pump curves

Wilo-Economy CO/T-1 MVI 402/ER - 410/ER

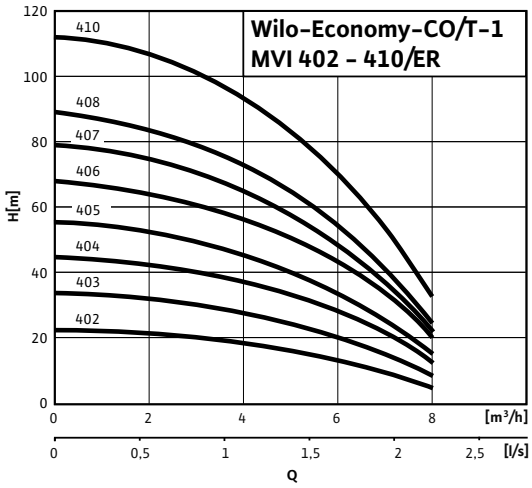

Motor data						
Wilo-Economy CO/T-1...	**Nominal motor power**	**Nominal current 3~230 V, 50 Hz**	**Nominal current 3~400 V, 50 Hz**	**Motor efficiency**		
	P_2	I_N		$\eta_{m\ 50\%}$	$\eta_{m\ 75\%}$	$\eta_{m\ 100\%}$
	kW	A		%		
MVI 402/ER	0.6	2.28	1.32	74.0	77.4	77.4
MVI 403/ER	0.8	2.8	1.6	76.0	77.4	77.4
MVI 404/ER	1.1	4.2	2.4	78.0	79.6	79.6
MVI 405/ER	1.1	4.2	2.4	78.0	79.6	79.6
MVI 406/ER	1.5	5.4	3.1	80.0	81.3	81.3
MVI 407/ER	1.5	5.4	3.1	80.0	81.3	81.3
MVI 408/ER	2.2	7.8	4.5	82.0	83.2	83.2
MVI 410/ER	2.2	7.8	4.5	82.0	83.2	83.2

Motor efficiency based on 400 V, 50 Hz

Technical data Wilo-Economy CO/T-1 MVI.../ER

Dimension drawing

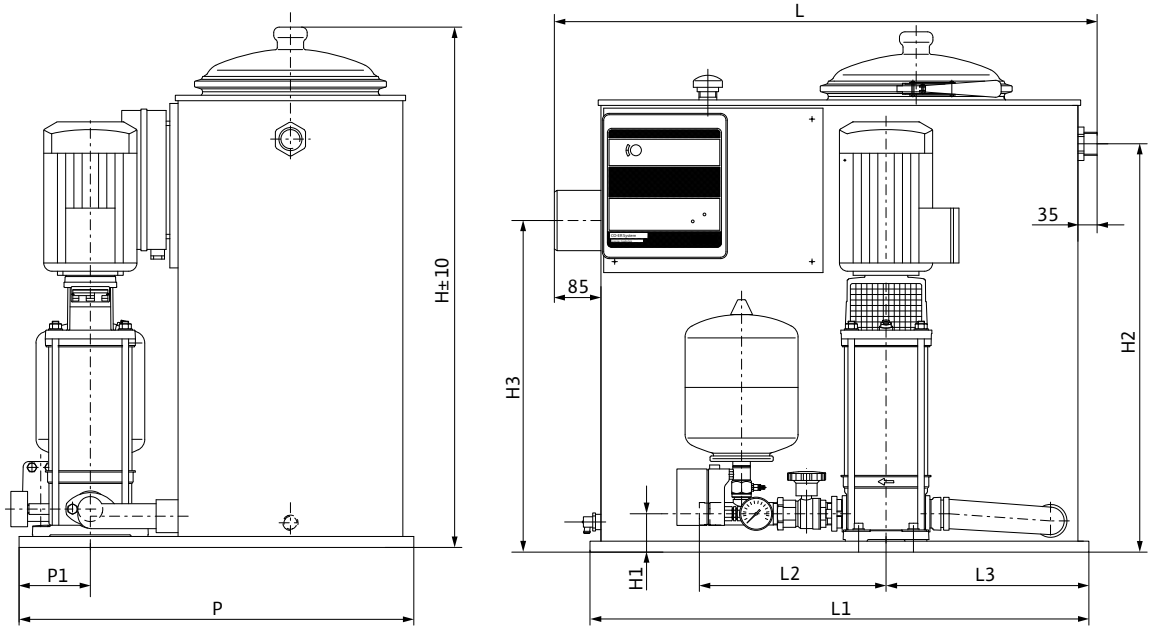

Dimensions, weights

Wilo-Economy CO/T-1...	Nominal diameters of the pipe connections on suction side	Nominal diameters of pipe connections on the pressure side	Dimensions										Weight approx.
	RPS	*RPD*	*H*	*H1*	*H2*	*H3*	*L*	*L1*	*L2*	*L3*	*P*	*P1*	*m*
			mm										kg
MVI 402/ER	Rp 1¼	Rp 1¼	945	70	745	605	990	910	350	370	720	130	69
MVI 403/ER	Rp 1¼	Rp 1¼	945	70	745	605	990	910	350	370	720	130	73
MVI 404/ER	Rp 1¼	Rp 1¼	945	70	745	605	990	910	350	370	720	130	74
MVI 405/ER	Rp 1¼	Rp 1¼	945	70	745	605	990	910	350	370	720	130	75
MVI 406/ER	Rp 1¼	Rp 1¼	945	70	745	605	990	910	350	370	720	130	83
MVI 407/ER	Rp 1¼	Rp 1¼	945	70	745	605	990	910	350	370	720	130	84
MVI 408/ER	Rp 1¼	Rp 1¼	945	70	745	605	990	910	350	370	720	130	85
MVI 410/ER	Rp 1¼	Rp 1¼	945	70	745	605	990	910	350	370	720	130	86

Pressure boosting

Single pump systems with fixed speed

Series description of Wilo-Economy CO-1 MVIS.../ER

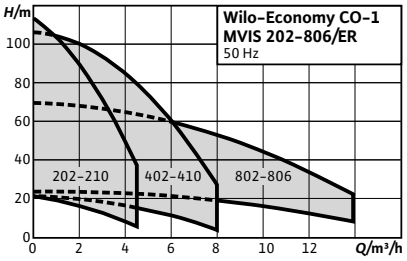

Design

Water-supply unit with a glandless, non-self-priming high-pressure multistage centrifugal pump

Type key

Example:	**Wilo-CO-1 MVIS 204/ER**
CO	Compact pressure boosting system
1	With one pump
MVIS	Pump series
2	Rated volume flow of the single pump [m^3/h]
04	Number of single-pump stages
ER	Control device; ER = Economy-Controller

Application

- Fully automatic water supply in inlet mode, either from the public water supply network or from a tank.
- Pumping of potable water, secondary hot water, cooling water, fire water or other water mixtures that do not chemically or mechanically attack the materials used and do not contain abrasive or long-fibre constituents

Special features/product advantages

- Virtually noiseless system due to a glandless stainless-steel high-pressure multistage centrifugal pump
- Up to 20 dB[A] quieter than conventional systems with comparable hydraulic output
- Operationally reliable due to combination of MVIS pump series with ER-1 switchgear

Technical data

- Mains connection 3~230/400 V ±10%, 50 Hz (other versions on request)
- Max. fluid temperature 50 °C
- Max. ambient temperature 40 °C
- Operating pressure 6 bar
- Inlet pressure 6 bar
- Switching pressure stages 6/10/16 bar
- Nominal connection diameters, on inlet side Rp 1¼ - Rp 1½
- Nominal connection diameters on discharge side R 1¼
- Nominal speed 2800 rpm
- Protection class IP 41
- Switching capacity P_2 max. at max. 10 A = 4 kW (for > 4 kW downstream electromechanical power section)
- Fuse protection on mains side [AC 3] according to motor power and EVU regulations
- Approved fluids (other fluids on request):
  - Pure water without settling sediments
  - Process water, cold water, cooling water and rainwater
  - Potable water
  - Fire water
- Note on fluids: Approved fluids are generally waters which do not attack the materials used, neither chemically nor mechanically, and do not contain any abrasive or long-fibre constituents.

Equipment/function

- 1 MVIS series pump
- Maximum stage number: 10
- Three-phase current glandless pump motor
- Components that come in contact with fluid are corrosion-resistant
- Base frame made of galvanised 1.4301 stainless steel, with height-adjustable vibration absorbers for insulation against structure-borne noise
- Check valve, pressure side
- Non-return valve, on pressure side
- Diaphragm pressure vessel 8 l, PN16, pressure side

Materials

- Foot 1.4301 stainless steel
- Impellers 1.4301 stainless steel
- Stage chambers 1.4301 stainless steel
- Pressure shroud 1.4301 stainless steel
- Shaft 1.4122 stainless steel
- Bearing/mechanical seal made of carbon, resin-impregnated
- Pipework made of 1.4571 stainless steel

Description/design

- Connection-ready water-supply unit, mounted on base frame made of stainless steel including vibration absorber, complete pipework made of stainless steel, including all necessary fittings and check valves (except for inlet-side check valve), pressure control kit, stainless steel glandless high-pressure multistage centrifugal pump (MVIS) and ER-1 switchgear, mounted, wired and ready for connection; trip electronics in switchgear for low-water cut-out.
- Diaphragm pressure vessel: 8 l/PN 16 located on the discharge side with a butyl rubber diaphragm, completely safe in accordance with food safety laws; for testing and inspection purposes, with shut-off ball cock, with drain and throughflow fitting according to DIN 4807
- Switchgear: the system is standard-equipped with an ER-1 Economy-Controller

Series description of Wilo-Economy CO-1 MVIS.../ER

Scope of delivery

- Factory-mounted, connection-ready pressure boosting system checked for functionality and impermeability
- Packaging
- Installation and operating instructions

Electrical connection

3~400 V ≤ 4 kW/10 A

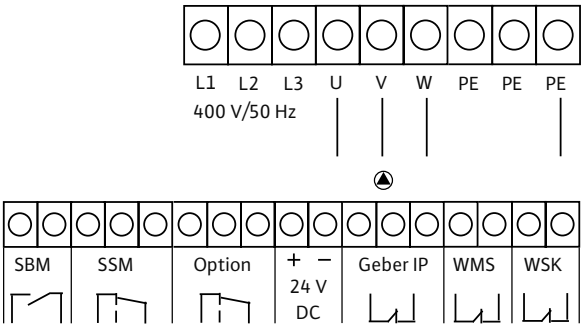

Technical data Wilo-Economy CO-1 MVIS.../ER

Pump curves

Wilo-Economy CO-1 MVIS 202/ER - 210/ER

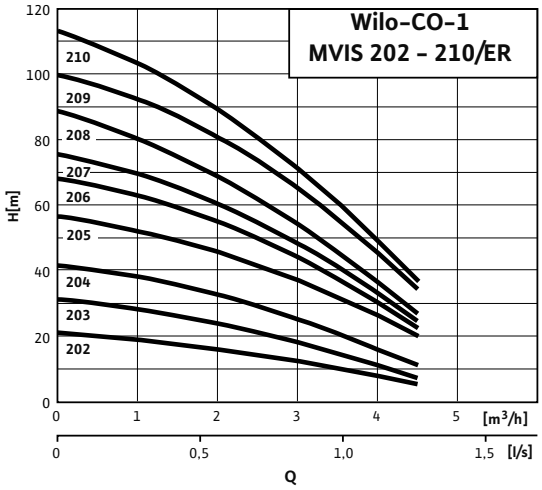

Motor data				
Wilo-Economy CO-1...	**Power consumption**	**Nominal motor power**	**Nominal current 3~230 V, 50 Hz**	**Nominal current 3~400 V, 50 Hz**
	P_1	P_2	I_N	
	kW		A	
MVIS 202/ER	0.51	0.35	2.1	1.2
MVIS 203/ER	0.72	0.45	2.6	1.5
MVIS 204/ER	0.88	0.45	3	1.7
MVIS 205/ER	1.2	1.1	4.5	2.6
MVIS 206/ER	1.38	1.1	4.9	2.8
MVIS 207/ER	1.53	1.1	5.2	3
MVIS 208/ER	1.69	1.1	5.6	3.2
MVIS 209/ER	2.14	2.2	8	4.6
MVIS 210/ER	2.33	2.2	8.5	4.9

Technical data Wilo-Economy CO-1 MVIS.../ER

Dimension drawing

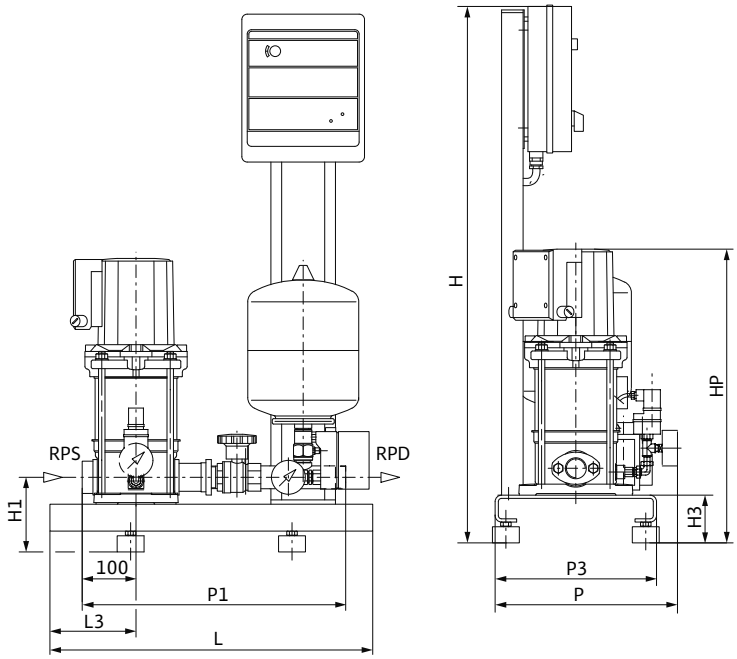

Sample systems are shown. Switchbox position depends on pump height.
Accessories (to be ordered separately): Optional WMS low-water cut-out switchgear kit
Installation surface: flat and horizontal
Installation location: dry, well ventilated and frost-proof

Dimensions, weights

Wilo-Economy CO-1...	Nominal diameters of the pipe connections on suction side	Nominal diameters of pipe connections on the pressure side	Dimensions									Weight approx.
	RPS	*RPD*	*H*	*H1*	*H3*	*HP*	*L*	*L3*	*P*	*P1*	*P3*	*m*
			mm									kg
MVIS 202/ER	Rp 1¼	R 1¼	1000	140	90	444	600	160	340	490	300	41
MVIS 203/ER	Rp 1¼	R 1¼	1000	140	90	468	600	160	340	490	300	42
MVIS 204/ER	Rp 1¼	R 1¼	1000	140	90	492	600	160	340	490	300	43
MVIS 205/ER	Rp 1¼	R 1¼	1000	140	90	536	600	160	340	490	300	47
MVIS 206/ER	Rp 1¼	R 1¼	1000	140	90	560	600	160	340	490	300	48
MVIS 207/ER	Rp 1¼	R 1¼	1000	140	90	584	600	160	340	490	300	49
MVIS 208/ER	Rp 1¼	R 1¼	1000	140	90	608	600	160	340	490	300	50
MVIS 209/ER	Rp 1¼	R 1¼	1000	140	90	662	600	160	340	490	300	54
MVIS 210/ER	Rp 1¼	R 1¼	1000	140	90	686	600	160	340	490	300	55

Technical data Wilo-Economy CO-1 MVIS.../ER

Pump curves

Wilo-Economy CO-1 MVIS 402/ER - 410/ER

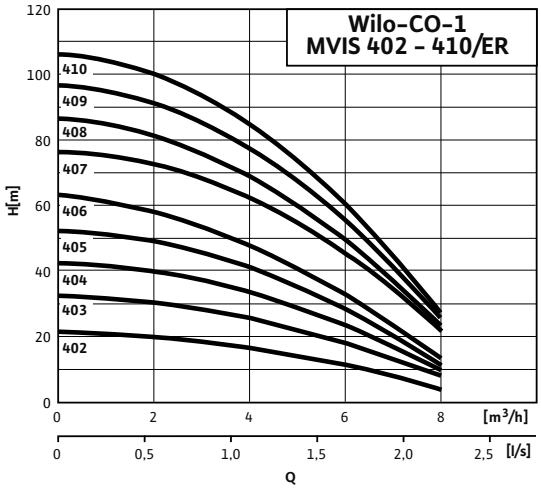

Motor data				
Wilo-Economy CO-1...	**Power consumption**	**Nominal motor power**	**Nominal current 3~230 V, 50 Hz**	**Nominal current 3~400 V, 50 Hz**
	P_1	P_2	I_N	
	kW		A	
MVIS 402/ER	0.69	0.45	2.6	1.5
MVIS 403/ER	1.02	1.1	4.2	2.4
MVIS 404/ER	1.26	1.1	4.5	2.6
MVIS 405/ER	1.48	1.1	5.2	3
MVIS 406/ER	1.7	1.1	5.6	3.2
MVIS 407/ER	2.2	2.2	8	4.6
MVIS 408/ER	2.4	2.2	8.5	4.9
MVIS 409/ER	2.69	2.2	9.2	5.3
MVIS 410/ER	2.94	2.2	9.7	5.6

Technical data Wilo-Economy CO-1 MVIS.../ER

Dimension drawing

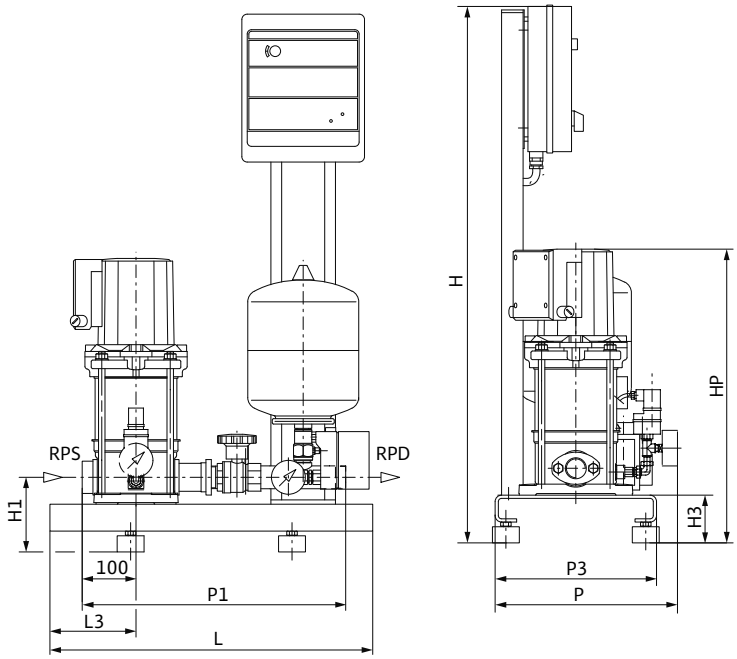

Sample systems are shown. Switchbox position depends on pump height.
Accessories (to be ordered separately): Optional WMS low-water cut-out switchgear kit
Installation surface: flat and horizontal
Installation location: dry, well ventilated and frost-proof

Dimensions, weights

Wilo-Economy CO-1...	Nominal diameters of the pipe connections on suction side	Nominal diameters of pipe connections on the pressure side	Dimensions									Weight approx.
	RPS	*RPD*	*H*	*H1*	*H3*	*HP*	*L*	*L3*	*P*	*P1*	*P3*	*m*
			mm									kg
MVIS 402/ER	Rp 1¼	R 1¼	1000	140	90	444	600	160	340	490	300	42
MVIS 403/ER	Rp 1¼	R 1¼	1000	140	90	488	600	160	340	490	300	47
MVIS 404/ER	Rp 1¼	R 1¼	1000	140	90	512	600	160	340	490	300	48
MVIS 405/ER	Rp 1¼	R 1¼	1000	140	90	536	600	160	340	490	300	49
MVIS 406/ER	Rp 1¼	R 1¼	1000	140	90	560	600	160	340	490	300	50
MVIS 407/ER	Rp 1¼	R 1¼	1000	140	90	641	600	160	340	490	300	51
MVIS 408/ER	Rp 1¼	R 1¼	1000	140	90	638	600	160	340	490	300	55
MVIS 409/ER	Rp 1¼	R 1¼	1000	140	90	662	600	160	340	490	300	56
MVIS 410/ER	Rp 1¼	R 1¼	1000	140	90	686	600	160	340	490	300	57

Technical data Wilo-Economy CO-1 MVIS.../ER

Pump curves

Wilo-Economy CO-1 MVIS 802/ER - 806/ER

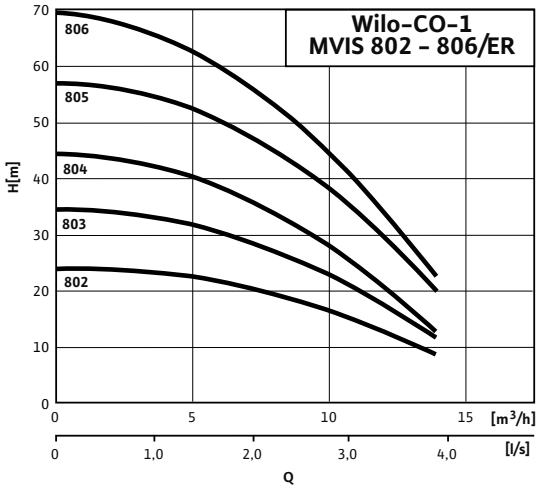

Motor data				
Wilo-Economy CO-1...	**Power consumption**	**Nominal motor power**	**Nominal current 3~230 V, 50 Hz**	**Nominal current 3~400 V, 50 Hz**
	P_1	P_2	I_N	
	kW		A	
MVIS 802/ER	1.25	1.1	4.5	2.6
MVIS 803/ER	1.6	1.1	5.4	3.1
MVIS 804/ER	1.95	1.1	6.3	3.6
MVIS 805/ER	2.67	2.2	9.2	5.3
MVIS 806/ER	2.98	2.2	9.7	5.6

Technical data Wilo-Economy CO-1 MVIS.../ER

Dimension drawing

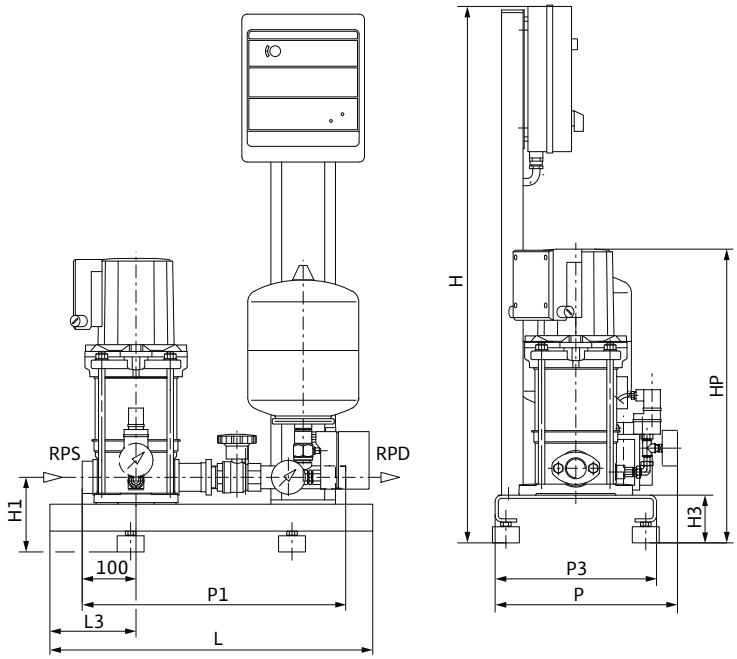

Sample systems are shown. Switchbox position depends on pump height.
Accessories (to be ordered separately): Optional WMS low-water cut-out switchgear kit
Installation surface: flat and horizontal
Installation location: dry, well ventilated and frost-proof

Dimensions, weights

Wilo-Economy CO-1...	Nominal diameters of the pipe connections on suction side	Nominal diameters of pipe connections on the pressure side	Dimensions									Weight approx.
	RPS	*RPD*	*H*	*H1*	*H3*	*HP*	*L*	*L3*	*P*	*P1*	*P3*	*m*
			mm									kg
MVIS 802/ER	Rp 1½	R 1¼	1000	170	90	515	600	160	340	560	300	50
MVIS 803/ER	Rp 1½	R 1¼	1000	170	90	545	600	160	340	560	300	51
MVIS 804/ER	Rp 1½	R 1¼	1000	170	90	575	600	160	340	560	300	59
MVIS 805/ER	Rp 1½	R 1¼	1000	170	90	635	600	160	340	560	300	60
MVIS 806/ER	Rp 1½	R 1¼	1000	170	90	665	600	160	340	560	300	62

Pressure boosting

Multi-pump systems

Series overview

Series	**Wilo-SiBoost Smart Helix EXCEL**	**Wilo-SiBoost Smart Helix VE**
Product photo		
Duty chart	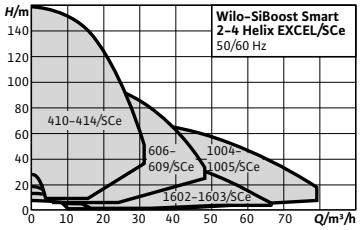	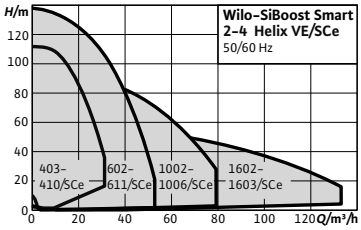
Design	Highly efficient water-supply unit (non self-priming) ready for connection with 2 to 4 vertically arranged Helix EXCEL stainless steel high-pressure centrifugal pumps switched in parallel; each pump is equipped with an integrated air-cooled, high-efficiency frequency converter and an EC motor, including Smart Controller SCe. Valves and sensors are protected for safe and reliable installation	Highly efficient water supply unit ready for connection (non self-priming). With 2 to 4 vertically arranged Helix VE series stainless steel high-pressure centrifugal pumps in glanded version switched in parallel; every pump is equipped with an integrated air-cooled frequency converter, incl. Smart Controller SCe
Application	• Fully automatic water supply and pressure boosting in residential, commercial and public buildings, hotels, hospitals, department stores and for industrial systems. • Pumping of potable water, process water, cooling water, fire water (apart from fire-extinguishing systems in accordance with DIN14462) or other water mixtures that do not attack the materials used chemically or mechanically and do not contain abrasive or long-fibre constituents	• Fully automatic water supply and pressure boosting in residential, commercial and public buildings, hotels, hospitals, department stores and for industrial systems. • Pumping of potable water, process water, cooling water, fire water (apart from fire-extinguishing systems in accordance with DIN14462) or other water mixtures that do not attack the materials used chemically or mechanically and do not contain abrasive or long-fibre constituents
H_{max}	159 m	140 m
Q_{max}	79 m^3/h	132 m^3/h
Special features/ product advantages	• Highly efficient, heavy-duty system with Helix EXCEL stainless steel high-pressure multistage centrifugal pumps, with integrated air-cooled frequency converter • Highly efficient EC motor (efficiency higher than IE4 limit values in accordance with IEC TS 60034-31 Ed.1) • Highly efficient pump hydraulics, electronically controlled by EC motors • Hydraulics of entire system are pressure-loss optimised. • Superproportionally large frequency converter control range from 25 Hz to a maximum of 60 Hz • Maximum control quality and very simple operation due to the SCe control device used, with symbol-based LC display, simple navigation with a clear menu, rotary knob for easy setting of parameters	• Heavy-duty system with Helix VE series stainless steel high-pressure centrifugal pumps and air-cooled, integrated frequency converter • High-efficiency pump hydraulics in conjunction with IE2-equivalent standard motors • Hydraulics of entire system are pressure-loss optimised • Super-proportionally large control range of frequency converter from 25 Hz up to a maximum of 60 Hz • Integrated dry-running detection with automatic deactivation in the event of low water via performance characteristics of the motor control electronics • Very high control quality and very simple operation due to the use of the control device SCe, with symbol-based LC display, simple navigation with clear menu, rotary knob for quick setting of parameters
Further information	Series information from page 680 Wilo online catalogue at www.wilo.com	Series information from page 690 Wilo online catalogue at www.wilo.com

Series overview

Series	**Wilo-Comfort COR Helix VE.../CCe**
Product photo	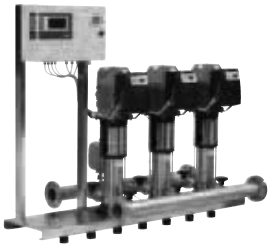
Duty chart	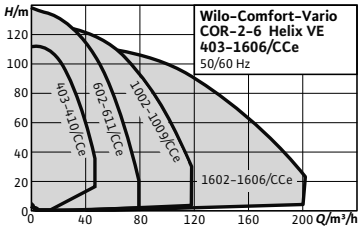
Design	Highly efficient water-supply unit ready for connection (non self-priming). With 2 to 6 vertically arranged Helix VE series stainless steel high-pressure centrifugal pumps in glanded version switched in parallel; every pump is equipped with an integrated air-cooled frequency converter, including Comfort-Controller CCe
Application	• Fully automatic water supply and pressure boosting in residential, commercial and public buildings, hotels, hospitals, department stores and for industrial systems. • Pumping of potable water, process water, cooling water, fire water (apart from fire-extinguishing systems in accordance with DIN14462) or other water mixtures that do not attack the materials used chemically or mechanically and do not contain abrasive or long-fibre constituents
H_{max}	129 m
Q_{max}	200 m^3/h
Special features/ product advantages	• Sturdy system with stainless steel high-pressure multistage centrifugal pumps of the Helix VE series and air-cooled, integrated frequency converter • High-efficiency pump hydraulics in conjunction with IE2-equivalent standard motors • Hydraulics of entire system are pressure-loss optimised. • Super-proportionally large frequency converter control range of 25 Hz up to a maximum of 60 Hz • Integrated dry-running detection with automatic deactivation in the event of low water via performance characteristics of the motor control electronics • Maximum control quality and very simple operation due to the CCe control device used, with extended functions, PLC microcomputer control and graphics-capable touchscreen, menu-prompted input of the operating parameters
Further information	Series information from page 706 Wilo online catalogue at www.wilo.com

Pressure boosting

Multi-pump systems

Series overview

Series	**Wilo-Comfort-Vario COR Helix VE.../VR**	**Wilo-Comfort-Vario COR MVIE.../VR**
Product photo		
Duty chart	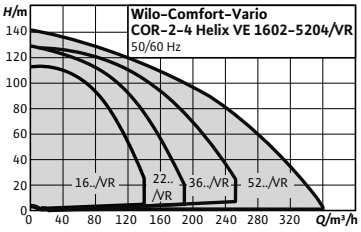	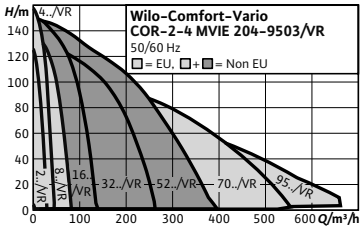
Design	Highly efficient water supply unit ready for connection (non self-priming) With 2 to 4 vertically arranged stainless steel high-pressure centrifugal pumps in glanded design of the Helix VE which are switched in parallel; every pump is equipped with an integrated air-cooled frequency converter, including Vario controller VR	Pressure boosting system with 2 to 4 non-self-priming stainless steel high-pressure multistage centrifugal pumps switched in parallel with speed-controlled motors and Vario controller VR
Application	• Fully automatic water supply and pressure boosting in residential, commercial and public buildings, hotels, hospitals, department stores and for industrial systems. • Pumping of potable water, process water, cooling water, fire water (apart from fire-extinguishing systems in accordance with DIN14462) or other water mixtures that do not attack the materials used chemically or mechanically and do not contain abrasive or long-fibre constituents	• Fully automatic water supply and pressure boosting in residential, commercial and public buildings, hotels, hospitals, department stores and industrial systems. • Pumping of potable water and process water, cooling water, fire water (except for fire extinguishing systems in accordance with DIN14462) or other service waters that do not attack the materials used, neither chemically nor mechanically, and do not contain any abrasive or long-fibre constituents
H_{max}	142 m	159 m
Q_{max}	360 m^3/h	650 m^3/h
Special features/ product advantages	• Sturdy system with stainless steel high-pressure multistage centrifugal pumps of the Helix VE series and air-cooled, integrated frequency converter • High-efficiency pump hydraulics in conjunction with IE2-equivalent standard motors • Hydraulics of entire system are pressure-loss optimised. • Superproportionally large frequency converter control range of 25 Hz up to a maximum of 60 Hz • Integrated dry-running detection with automatic deactivation in the event of low water via performance characteristics of the motor control electronics • Ultimate control quality and supremely easy operation due to the VR controller used	• Heavy-duty system due to MVIE series stainless steel high-pressure multistage centrifugal pumps with air-cooled integrated frequency converters • IEC three-phase motors (Level IE2), from 0.75 kW, 2-pole • Superproportionally large control range • Integrated dry-running detection with automatic deactivation in the event of low water via performance characteristics of the motor control electronics
Further information	Series information from page 752 Wilo online catalogue at www.wilo.com	Series information from page 784 Wilo online catalogue at www.wilo.com

Series overview

Series	**Wilo-Comfort-N-Vario COR MVISE.../VR**	**Wilo-Comfort-Vario COR MHIE.../VR**
Product photo		
Duty chart	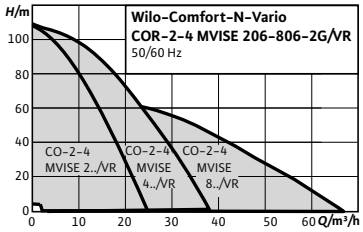	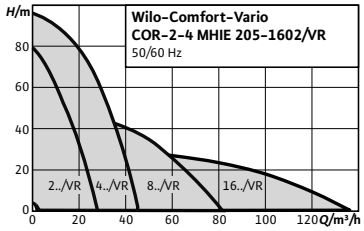
Design	Pressure boosting system with 2 to 4 parallel-switched, non-self-priming stainless steel high-pressure multistage centrifugal pumps with speed-controlled glandless pump motors	Pressure boosting system with 2 to 4 parallel-switched, non-self-priming stainless steel high-pressure multistage centrifugal pumps with speed-controlled motors
Application	• Fully automatic water supply and pressure boosting in residential, commercial and public buildings, hotels, hospitals, department stores and industrial systems. • Pumping of potable water and process water, cooling water, fire water (except for fire extinguishing systems in accordance with DIN14462) or other service waters that do not attack the materials used, neither chemically nor mechanically, and do not contain any abrasive or long-fibre constituents	• Fully automatic water supply and pressure boosting in residential, commercial and public buildings, hotels, hospitals, department stores and for industrial systems. • Pumping of potable water and process water, cooling water, water for fire-fighting or other water mixtures that do not chemically or mechanically attack the materials used and do not contain abrasive or long-fibre constituents
H_{max}	106 m	96 m
Q_{max}	65 m^3/h	135 m^3/h
Special features/ product advantages	• System is virtually noise-free in operation due to 2-4 parallel-switched, glandless stainless steel high-pressure multistage centrifugal pumps with integrated, water-cooled frequency converter • Up to 20 dB[A] quieter than conventional systems with comparable hydraulic output • Control range of frequency converters from 20 to 50 Hz • Operationally reliable through the use of the MVISE pump series with integrated dry-running detection and automatic deactivation in the event of low water	• Compact system with outstanding price/performance ratio due to MHIE series stainless steel high-pressure multistage centrifugal pumps with integrated air-cooled frequency converters • Superproportionally large control range • Integrated full motor protection with PTC thermistor sensor • Integrated dry-running detection with automatic deactivation in the event of low water via performance characteristics of the motor control electronics
Further information	Series information from page 850 Wilo online catalogue at www.wilo.com	Series information from page 866 Wilo online catalogue at www.wilo.com

Pressure boosting

Multi-pump systems

Series overview

Series	**Wilo-SiBoost Smart (FC) Helix V**	**Wilo-Comfort CO-/COR-Helix V.../CC**
Product photo		
Duty chart	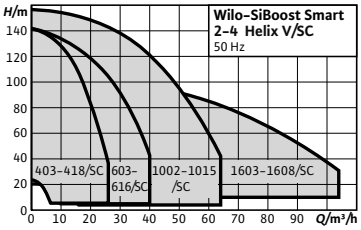	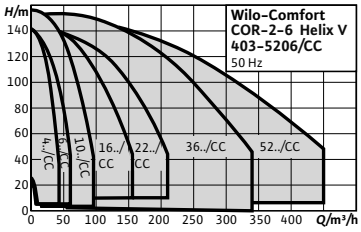
Design	Highly efficient water-supply unit ready for connection (non self-priming). With 2 to 4 vertically arranged glanded stainless steel high-pressure multistage centrifugal pumps from the Helix V series connected in parallel, including Smart Controller SC (available with and without frequency converter FC).	Highly efficient, ready for connection water-supply unit (non self-priming) with 2 to 6 vertically arranged glanded stainless steel high-pressure multistage centrifugal pumps from the Helix V series switched in parallel, including Comfort-Controller CC (available with and without frequency converter)
Application	• Fully automatic water supply and pressure boosting in residential, commercial and public buildings, hotels, hospitals, department stores and for industrial systems. • Pumping of potable water, process water, cooling water, fire water (apart from fire-extinguishing systems in accordance with DIN 14462) or other water mixtures that do not attack the materials used chemically or mechanically and do not contain abrasive or long-fibre constituents	• Fully automatic water supply and pressure boosting in residential, commercial and public buildings, hotels, hospitals, department stores and for industrial systems. • Pumping of potable water, process water, cooling water, fire water (apart from fire-extinguishing systems in accordance with DIN 14462) or other water mixtures that do not attack the materials used chemically or mechanically and do not contain abrasive or long-fibre constituents
H_{max}	156 m	158 m
Q_{max}	105 m^3/h	450 m^3/h
Special features/ product advantages	• Heavy-duty system with Helix V series stainless steel high-pressure multistage centrifugal pumps for all requirements contained in DIN 1988 (EN 806) • High-efficiency pump hydraulics in conjunction with IE2 standard motors • Hydraulics of entire system are pressure-loss optimised. • 2- 6 vertical Helix V series high-pressure multistage centrifugal pumps switched in parallel • "Smart" Controller: symbol-based LC display, simple navigation with a clear menu, rotary knob for easy setting of parameters. Communication-capable control device for monitoring the system operation, available with and without frequency converter for infinitely variable control of the base-load pump	• Heavy-duty system with Helix V series stainless steel high-pressure multistage centrifugal pumps for all requirements contained in DIN 1988 (EN 806) • High-efficiency pump hydraulics in conjunction with IE2 standard motors • Hydraulics of entire system are pressure-loss optimised. • 2- 6 vertically arranged Helix V series high-pressure multistage centrifugal pumps switched in parallel • Easy-to-use controller CC, with expanded functions, memory-programmable microcomputer control and graphics-ready touchscreen, menu-prompted input of operating parameters, available with or without frequency converter for stepless control of base-load pump
Further information	Series information from page 882 Wilo online catalogue at www.wilo.com	Series information from page 934 Wilo online catalogue at www.wilo.com

Series overview

Series	**Wilo-Comfort CO-/COR-MVI.../CC**	**Wilo-Comfort-N-CO-/COR-MVIS.../CC**	**Wilo-Economy CO-MHI.../ER**
Product photo			
Duty chart	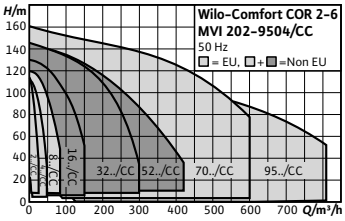	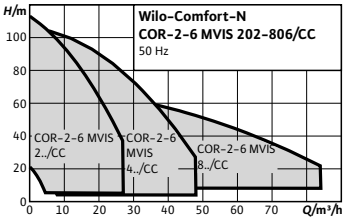	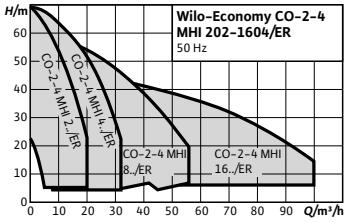
Design	Pressure boosting system with 2 to 6 parallel-switched, non self-priming stainless steel high-pressure multistage centrifugal pumps	Pressure boosting system with 2 to 6 parallel-switched, non-self-priming stainless steel high-pressure multistage centrifugal pumps with glandless pump motor	Pressure boosting system with 2 to 4 parallel-switched, non-self-priming, horizontal high-pressure multistage centrifugal pumps made of stainless steel
Application	• Fully automatic water supply and pressure boosting in residential, commercial and public buildings, hotels, hospitals, department stores and for industrial systems. • Pumping of potable water and process water, cooling water, water for fire-fighting or other water mixtures that do not chemically or mechanically attack the materials used and do not contain abrasive or long-fibre constituents	• Fully automatic water supply and pressure boosting in residential, commercial and public buildings, hotels, hospitals, department stores and for industrial systems. • Pumping of potable water and process water, cooling water, water for fire-fighting or other water mixtures that do not chemically or mechanically attack the materials used and do not contain abrasive or long-fibre constituents	• For fully automatic water supply and pressure boosting in residential, commercial and public buildings, hotels, hospitals, department stores and for industrial systems. • Pumping of potable water and process water, cooling water, water for fire-fighting or other water mixtures that do not chemically or mechanically attack the materials used and do not contain abrasive or long-fibre constituents
H_{max}	160 m	110 m	70 m
Q_{max}	800 m^3/h	84 m^3/h	100 m^3/h
Special features/ product advantages	• Convenient system with MVI series stainless steel high-pressure multistage centrifugal pumps for all requirements contained in DIN 1988 • 2-6 vertical MVI series high-pressure multistage centrifugal pumps switched in parallel with IEC standard motors • CC Comfort Control with memory-programmable microcomputer control and graphics-ready touch display, menu-prompted input of operating parameters; on COR systems, fitted with frequency converter for infinitely variable control of the base-load pump • Customised units on request	• Easy-to-use system in compliance with all requirements outlined in DIN 1988 • 2-6 vertical MVIS series full-stainless-steel high-pressure multistage centrifugal pumps switched in parallel • Virtually noiseless system due to glandless MVIS series stainless-steel high-pressure multistage centrifugal pumps • Up to 20 dB[A] quieter than conventional systems with comparable hydraulic output • Customised units on request	• Compact system with outstanding price/performance ratio in compliance with the requirements of DIN 1988 • 2 - 4 fully stainless steel horizontal MHI high-pressure multistage centrifugal pumps switched in parallel (IE2 motors) • Easily adjustable and operationally reliable thanks to integrated ER 2 to ER 4 switchgears
Further information	Series information from page 1008 Wilo online catalogue at www.wilo.com	Series information from page 1092 Wilo online catalogue at www.wilo.com	Series information from page 1124 Wilo online catalogue at www.wilo.com

Pressure boosting

Multi-pump systems, speed-controlled

Series description Wilo-SiBoost Smart Helix EXCEL

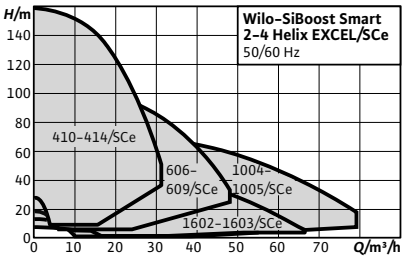

Design

Highly efficient water-supply unit (non self-priming) ready for connection with 2 to 4 vertically arranged Helix EXCEL stainless steel high-pressure centrifugal pumps switched in parallel; each pump is equipped with an integrated air-cooled, high-efficiency frequency converter and an EC motor, including Smart Controller SCe. Valves and sensors are protected for safe and reliable installation

Type key

Example:	**Wilo-SiBoost-Smart 3 Helix EXCEL 1005**
SiBoost	System for pressure boosting in the commercial area
Smart	Control device, Smart Controller SCe
3	Number of single pumps
Helix EXCEL	Pump series
10	Rated volume flow [m^3/h] of the single pump
05	Number of single pump stages

Application

- Fully automatic water supply and pressure boosting in residential, commercial and public buildings, hotels, hospitals, department stores and for industrial systems.
- Pumping of potable water, process water, cooling water, fire water (apart from fire-extinguishing systems in accordance with DIN14462) or other water mixtures that do not attack the materials used chemically or mechanically and do not contain abrasive or long-fibre constituents

Special features/product advantages

- Highly efficient, heavy-duty system with Helix EXCEL stainless steel high-pressure multistage centrifugal pumps, with integrated air-cooled frequency converter
- Highly efficient EC motor (efficiency higher than IE4 limit values in accordance with IEC TS 60034-31 Ed.1)
- Highly efficient pump hydraulics, electronically controlled by EC motors
- Hydraulics of entire system are pressure-loss optimised.
- Superproportionally large frequency converter control range from 25 Hz to a maximum of 60 Hz
- Maximum control quality and very simple operation due to the SCe control device used, with symbol-based LC display, simple navigation with a clear menu, rotary knob for easy setting of parameters

Technical data

- Mains connection 3~400 V ± 10%, 50 Hz; 3~380 V ±10 %, 60 Hz
- Max. fluid temperature +50 °C (+70 °C optional)
- Max. ambient temperature 40 °C
- Operating pressure 16 bar (25 bar optional)
- Inlet pressure 10 bar
- Nominal connection diameters on discharge side R 1½" - R 3"
- Nominal connection diameters on inlet side R 1½" - R 3"
- Speed range 1500-3770 rpm
- Protection class: IP 54 (SCe control device)
- Fuse protection on mains side A, AC 3 according to motor power and EVU regulations
- Approved fluids (other fluids on request):
  - Potable water and secondary hot water
  - Cooling water
  - Fire water
- Note on fluids: Approved fluids are generally waters which do not attack the materials used, neither chemically nor mechanically, and do not contain any abrasive or long-fibre constituents. System in accordance with DIN 1988 (EN 806)

Equipment/function

- 2-4 pumps for systems with Helix EXCEL 4. 6, 10 and 2 pumps for system with Helix EXCEL 16, with high-efficiency EC motor and infinitely variable speed control via integrated frequency converter at every pump
- Automatic pump control via Smart Controller SCe
- Parts that come in contact with the fluid are corrosion-resistant
- Base frame made of galvanised steel, with height-adjustable vibration absorbers for insulation against structure-borne noise
- Check valve on the suction and pressure side of each pump
- Non-return valve on the pressure side of each pump
- Diaphragm pressure vessel 8 l, PN16, pressure side (accessories)
- Pressure sensor, pressure side
- Pressure gauge, pressure side
- Optional low-water cut-out switchgear with pressure gauge, suction side

Materials

- Impellers, diffusors, stage housing made of 1.4307 stainless steel
- Pump housing made of 1.4301 stainless steel
- Shaft made of 1.4057 stainless steel
- 1.4404 shaft protection sleeve
- O-ring gaskets made of EPDM (FKM gasket on request)
- Piping made of 1.4301 stainless steel
- Removable covers made of plastic

Series description Wilo-SiBoost Smart Helix EXCEL

Description/design

- Base frame: galvanised steel, with height-adjustable vibration absorbers for comprehensive insulation against structure-borne noise as well as integrated hoisting gear; other versions on request
- Pipework: complete pipework made of stainless steel, suitable for the connection of all conventional piping materials; the pipework is dimensioned according to the overall hydraulic performance of the pressure boosting system
- Pumps: 2 to 4 pumps switched in parallel of the Helix EXCEL 4.., 6.., 10.., 16.. series. The air-cooled frequency converters mounted on the pump motor enable infinitely variable control between 25 Hz and a maximum of 60 Hz for all pumps of this series. All pump parts which come into contact with the fluid are made of stainless steel; other versions on request. KTW/WRAS/ACS approval for all parts that come in contact with the fluid
- Valves: Each pump is fitted on the suction and pressure side with a standard check valve with DVGW approval mark and on the pressure side with a DVGW/KTW-approved non-return valve.
- Diaphragm pressure vessel (accessories): 8 l/PN16 arranged on the discharge side with a diaphragm made of butyl rubber, with DVGW/KTW approval, completely safe in accordance with food safety laws; for testing and inspection purposes, with a shut-off ball cock with drain and throughflow fitting with DVGW/KTW approval in accordance with DIN 4807
- Pressure sensor: 4 to 20 mA, located on the discharge side for controlling the central Smart Controller SC
- Pressure display: pressure gauge (ø 63 mm) arranged on the discharge side; additional digital indication of the discharge pressure in the alphanumeric LC display of the Smart Controller SC
- Switchgear/controller: The system is equipped with a Smart Controller SC as standard
- Removable covers on the suction side and pressure side: the design of the system guarantees optimal protection of the regulating components and sensors against wire breakage and prevents early wear

Scope of delivery

- Factory-mounted, connection-ready pressure boosting system checked for functionality and impermeability
- Packaging
- Installation and operating instructions

Terminal diagram

Smart Controller SCe

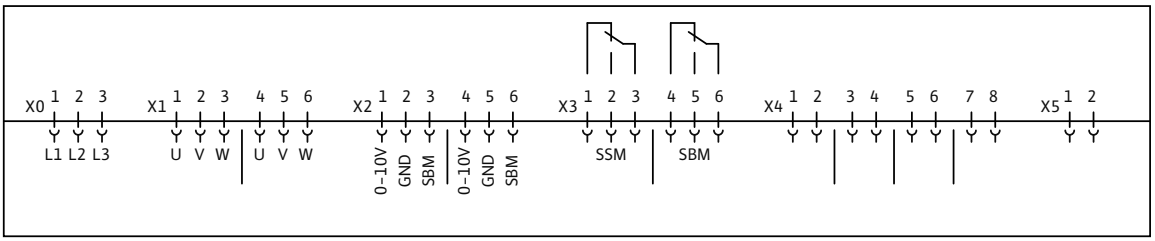

x0: Mains connection
x1: Power supply, pumps
- 1-3, pump 1
- 4-6, pump 2

x2: pump control
- 1-3, pump 1
- 4-6, pump 2
- etc.

x3: Potential-free contacts (signals)
- 1-3, SSM (collective fault signal)
- 4-6, SBM (collective run signal)

x4: Sensor connections
- 1, sensor (In) 2. sensor (+);
- 3-4, external On/Off
- 5-6, dry-running protection
- 7-8, setpoint 2

x5: Analogue outputs
- 1-2. actual pressure (0...10 V)

Technical data Wilo-SiBoost Smart Helix EXCEL

Pump curves

Wilo-SiBoost Smart 2-4 Helix EXCEL 410

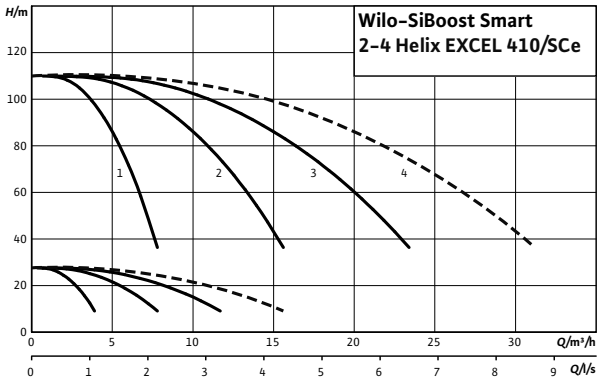

---- including standby pump

Pump curves

Wilo-SiBoost Smart 2-4 Helix EXCEL 414

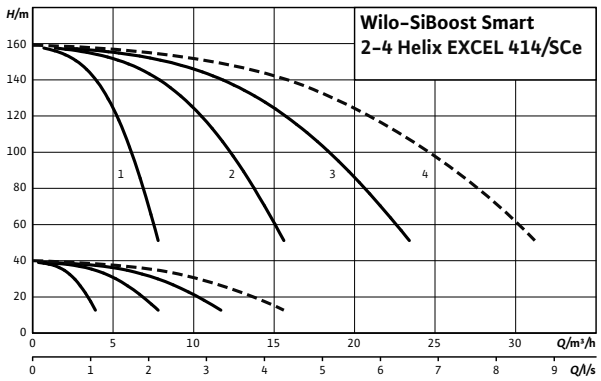

---- including standby pump

Motor data per pump

Wilo-SiBoost Smart 2-4...	Nominal motor power	Nominal current 3~400 V, 50 Hz	Motor efficiency
	P_2	I_N	$\eta_{m\ 100\%}$
	kW	A	%
Helix EXCEL 410	2.2	4.8	93.0
Helix EXCEL 414	3.2	6.4	93.0

Motor efficiency based on 400 V, 50 Hz

Technical data Wilo-SiBoost Smart Helix EXCEL

Dimension drawing

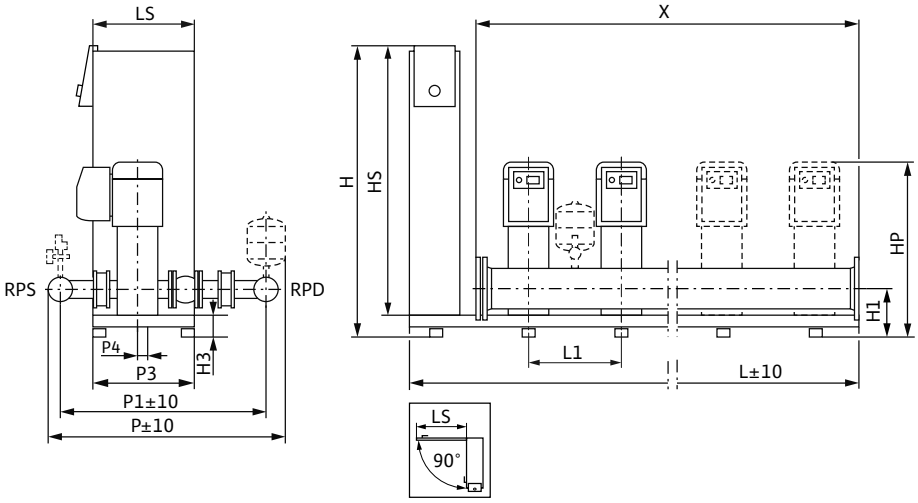

Sample systems are shown.
Accessories (to be ordered separately): Optional WMS low-water cut-out switchgear kit; diaphragm pressure vessel (8 l, PN16)
Installation surface: flat and horizontal
Installation location: dry, well ventilated and frost-proof
To facilitate maintenance, a service area of 1m around the installation is recommended.

Dimensions, weights

Wilo-SiBoost Smart 2-4...	Nominal diameters of the pipe connections on suction side	Nominal diameters of pipe con-nections on the pres-sure side	Dimensions													Weight approx.
	RPS	*RPD*	*H*	*H1*	*H3*	*HP*	*HS*	*L*	*L1*	*LS*	*P*	*P1*	*P3*	*P4*	*X*	*m*
			mm													kg
2Helix EXCEL 410	R 1½	R ½	1055	140	90	999	950	850	300	400	885	611	420	30	600	179
2Helix EXCEL 414	R 1½	R ½	1055	140	90	1099	950	850	300	400	885	611	420	30	600	189
3Helix EXCEL 410	R 2	R 2	1055	140	90	999	950	1150	300	400	885	623	420	30	900	245
3Helix EXCEL 414	R 2	R 2	1055	140	90	1099	950	1150	300	400	885	623	420	30	900	260
4Helix EXCEL 410	R 2½	R 2½	1055	140	90	999	950	1450	300	400	885	637	420	30	1200	311
4Helix EXCEL 414	R 2½	R 2½	1055	140	90	1099	950	1450	300	400	885	637	420	30	1200	331

Technical data Wilo-SiBoost Smart Helix EXCEL

Pump curves

Wilo-SiBoost Smart 2-4 Helix EXCEL 606

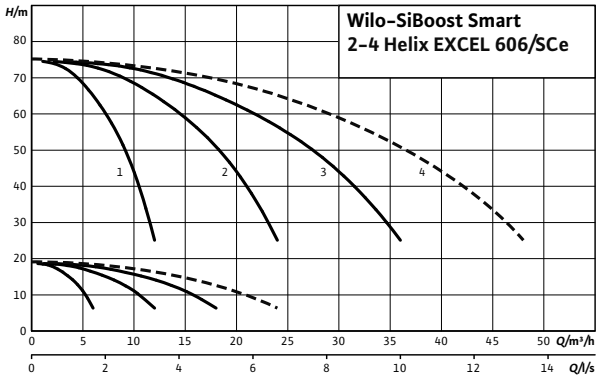

---- including standby pump

Pump curves

Wilo-SiBoost Smart 2-4 Helix EXCEL 609

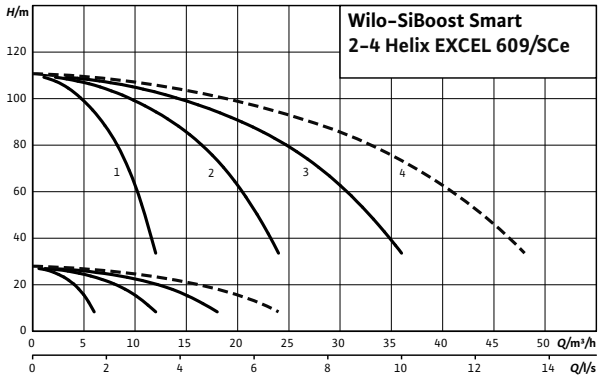

---- including standby pump

Motor data per pump

Wilo-SiBoost Smart 2-4...	Nominal motor power	Nominal current 3~400 V, 50 Hz	Motor efficiency
	P_2	I_N	$\eta_{m\ 100\%}$
	kW	A	%
Helix EXCEL 606	2.2	4.8	93.0
Helix EXCEL 609	3.2	6.4	93.0

Motor efficiency based on 400 V, 50 Hz

Technical data Wilo-SiBoost Smart Helix EXCEL

Dimension drawing

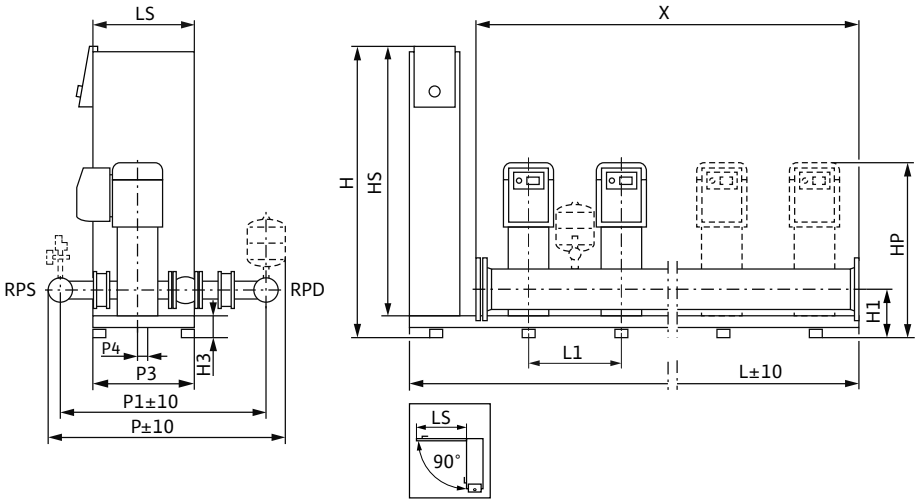

Sample systems are shown.
Accessories (to be ordered separately): Optional WMS low-water cut-out switchgear kit; diaphragm pressure vessel (8 l, PN16)
Installation surface: flat and horizontal
Installation location: dry, well ventilated and frost-proof
To facilitate maintenance, a service area of 1m around the installation is recommended.

Dimensions, weights

Wilo-SiBoost Smart 2-4...	Nominal diameters of the pipe connections on suction side	Nominal diameters of pipe connections on the pressure side	Dimensions													Weight approx.
	RPS	*RPD*	*H*	*H1*	*H3*	*HP*	*HS*	*L*	*L1*	*LS*	*P*	*P1*	*P3*	*P4*	*X*	*m*
			mm													kg
2Helix EXCEL 606	R 2	R 2	1055	140	90	964	950	850	300	400	885	623	420	30	600	180
2Helix EXCEL 609	R 2	R 2	1055	140	90	1087	950	850	300	400	885	623	420	30	600	192
3Helix EXCEL 606	R 2½	R 2½	1055	140	90	964	950	1150	300	400	885	637	420	30	900	246
3Helix EXCEL 609	R 2½	R 2½	1055	140	90	1087	950	1150	300	400	885	637	420	30	900	264
4Helix EXCEL 606	R 2½	R 2½	1055	140	90	964	950	1450	300	400	885	637	420	30	1200	311
4Helix EXCEL 609	R 2½	R 2½	1055	140	90	1087	950	1450	300	400	885	637	420	30	1200	335

Technical data Wilo-SiBoost Smart Helix EXCEL

Pump curves

Wilo-SiBoost Smart 2-4 Helix EXCEL 1004

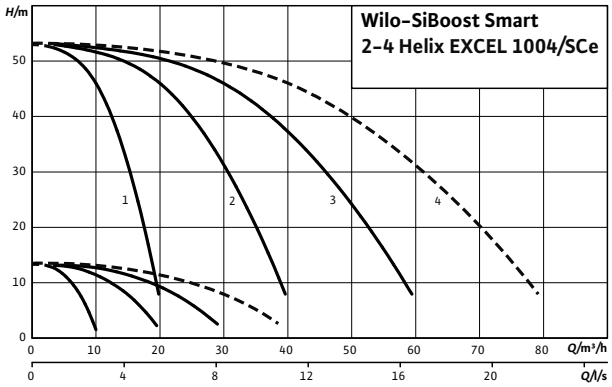

---- including standby pump

Pump curves

Wilo-SiBoost Smart 2-4 Helix EXCEL 1005

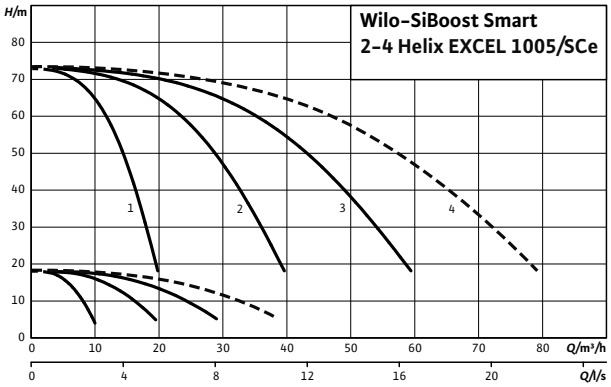

---- including standby pump

Motor data per pump

Wilo-SiBoost Smart 2-4...	Nominal motor power	Nominal current 3~400 V, 50 Hz	Motor efficiency
	P_2	I_N	$\eta_{m\ 100\%}$
	kW	A	%
Helix EXCEL 1004	2.2	4.8	93.0
Helix EXCEL 1005	3.2	6.4	93.0

Motor efficiency based on 400 V, 50 Hz

Technical data Wilo-SiBoost Smart Helix EXCEL

Dimension drawing

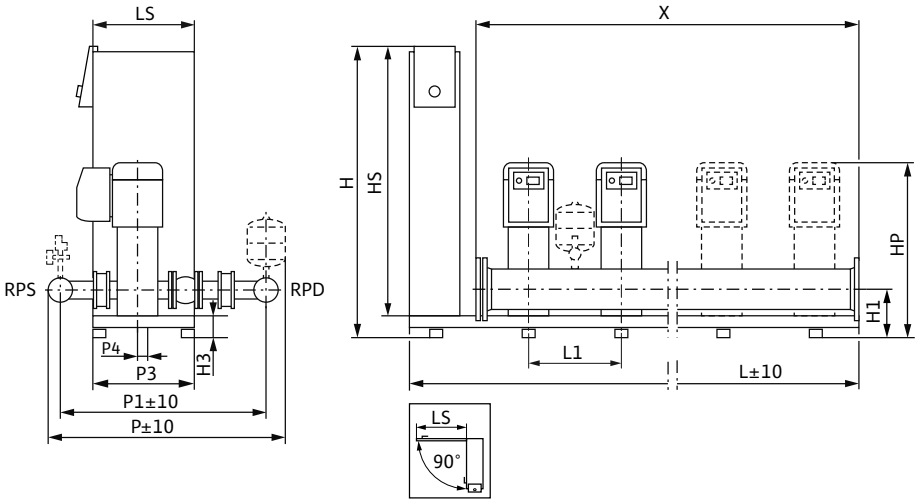

Sample systems are shown.
Accessories (to be ordered separately): Optional WMS low-water cut-out switchgear kit; diaphragm pressure vessel (8 l, PN16)
Installation surface: flat and horizontal
Installation location: dry, well ventilated and frost-proof
To facilitate maintenance, a service area of 1m around the installation is recommended.

Dimensions, weights

Wilo-SiBoost Smart 2-4...	Nominal diameters of the pipe connec-tions on suction side	Nominal diameters of pipe con-nections on the pres-sure side	Dimensions													Weight approx.
	RPS	*RPD*	*H*	*H1*	*H3*	*HP*	*HS*	*L*	*L1*	*LS*	*P*	*P1*	*P3*	*P4*	*X*	*m*
			mm													kg
2Helix EXCEL 1004	R 2½	R 2½	1055	170	90	920	950	850	300	400	885	704	420	30	600	175
2Helix EXCEL 1005	R 2½	R 2½	1055	170	90	958	950	850	300	400	885	704	420	30	600	180
3Helix EXCEL 1004	R 2½	R 2½	1055	170	90	920	950	1150	300	400	885	704	420	30	900	238
3Helix EXCEL 1005	R 2½	R 2½	1055	170	90	958	950	1150	300	400	885	704	420	30	900	245
4Helix EXCEL 1004	R 3	R 3	1055	170	90	920	950	1450	300	400	885	717	420	30	1200	299
4Helix EXCEL 1005	R 3	R 3	1055	170	90	958	950	1450	300	400	885	717	420	30	1200	309

Technical data Wilo-SiBoost Smart Helix EXCEL

Pump curves

Wilo-SiBoost Smart 2 Helix EXCEL 1602

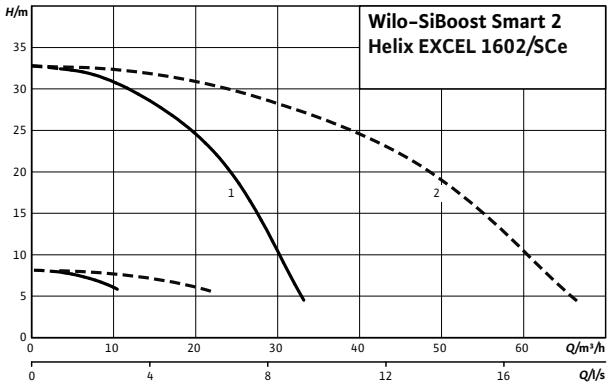

---- including standby pump

Pump curves

Wilo-SiBoost Smart 2 Helix EXCEL 1603

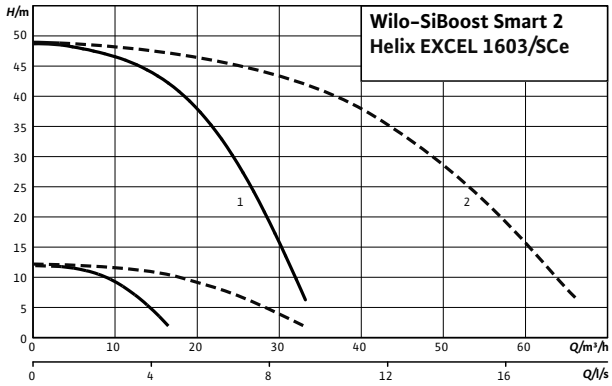

---- including standby pump

Motor data per pump

Wilo-SiBoost Smart 2-4...	Nominal motor power	Nominal current 3~400 V, 50 Hz	Motor efficiency
	P_2	I_N	$\eta_{m\ 100\%}$
	kW	A	%
Helix EXCEL 1602	2.2	4.8	93.0
Helix EXCEL 1603	3.2	6.4	93.0

Motor efficiency based on 400 V, 50 Hz

Technical data Wilo-SiBoost Smart Helix EXCEL

Dimension drawing

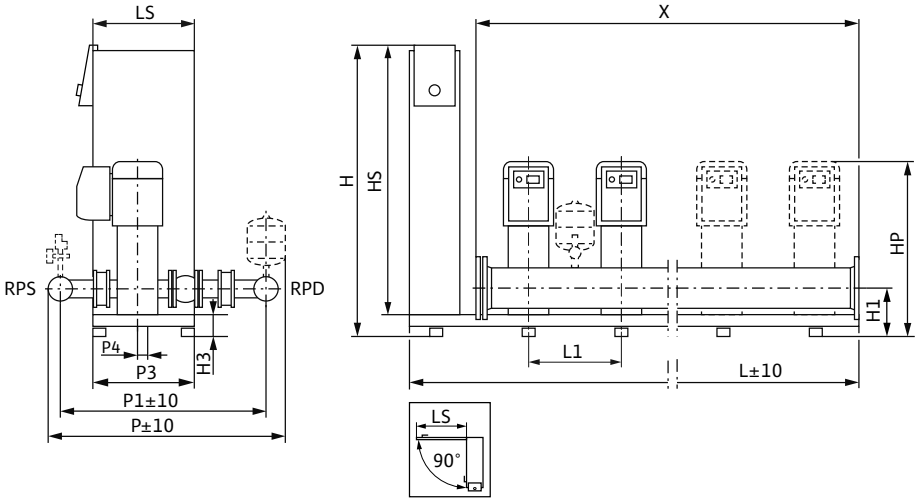

Sample systems are shown.
Accessories (to be ordered separately): Optional WMS low-water cut-out switchgear kit; diaphragm pressure vessel (8 l, PN16)
Installation surface: flat and horizontal
Installation location: dry, well ventilated and frost-proof
To facilitate maintenance, a service area of 1m around the installation is recommended.

Dimensions, weights

Wilo-SiBoost Smart 2-4...	Nominal diameters of the pipe connections on suction side	Nominal diameters of pipe connections on the pressure side	Dimensions													Weight approx.
	RPS	*RPD*	*H*	*H1*	*H3*	*HP*	*HS*	*L*	*L1*	*LS*	*P*	*P1*	*P3*	*P4*	*X*	*m*
			mm													kg
2Helix EXCEL 1602	R 3	R 3	1055	185	90	880	950	850	300	400	885	743	420	30	600	186
2Helix EXCEL 1603	R 3	R 3	1055	185	90	930	950	850	300	400	885	743	420	30	600	189

Pressure boosting

Multi-pump systems, speed-controlled

Series description Wilo-SiBoost Smart Helix VE

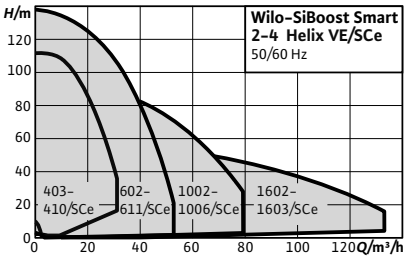

Design

Highly efficient water supply unit ready for connection (non self-priming). With 2 to 4 vertically arranged Helix VE series stainless steel high-pressure centrifugal pumps in glanded version switched in parallel; every pump is equipped with an integrated air-cooled frequency converter, incl. Smart Controller SCe

Type key

Example:	**Wilo-SiBoost-Smart 4Helix VE 1004**
SiBoost	System for pressure boosting in the commercial area
Smart	Control device Smart Controller SCe for pumps with frequency converter
4	Number of pumps
Helix VE	Pump series
10	Rated volume flow [m^3/h] of the single pump
04	Number of single-pump stages

Application

- Fully automatic water supply and pressure boosting in residential, commercial and public buildings, hotels, hospitals, department stores and for industrial systems.
- Pumping of potable water, process water, cooling water, fire water (apart from fire-extinguishing systems in accordance with DIN14462) or other water mixtures that do not attack the materials used chemically or mechanically and do not contain abrasive or long-fibre constituents

Special features/product advantages

- Heavy-duty system with Helix VE series stainless steel high-pressure centrifugal pumps and air-cooled, integrated frequency converter
- High-efficiency pump hydraulics in conjunction with IE2-equivalent standard motors
- Hydraulics of entire system are pressure-loss optimised
- Super-proportionally large control range of frequency converter from 25 Hz up to a maximum of 60 Hz
- Integrated dry-running detection with automatic deactivation in the event of low water via performance characteristics of the motor control electronics
- Very high control quality and very simple operation due to the use of the control device SCe, with symbol-based LC display, simple navigation with clear menu, rotary knob for quick setting of parameters

Technical data

- Mains connection 3~400 V ± 10%, 50 Hz; 3~380/440 V ±10 %, 60 Hz
- Max. fluid temperature +50 °C (+70 °C optional)
- Max. ambient temperature 40 °C
- Operating pressure 16 bar (25 bar optional)
- Inlet pressure 10 bar
- Nominal connection diameters on discharge side R 1½ - DN 100
- Nominal connection diameters on inlet side R 1½" - DN 100
- Speed range 1500-3770 rpm
- Protection class: IP 54 (SCe control device)
- Fuse protection on mains side A, AC 3 according to motor power and EVU regulations
- Approved fluids (other fluids on request):
  - Potable water and secondary hot water
  - Cooling water
  - Fire water
- Note on fluids: Approved fluids are generally waters which do not attack the materials used, neither chemically nor mechanically, and do not contain any abrasive or long-fibre constituents. System in accordance with DIN 1988 (EN 806)

Equipment/function

- 2-4 pumps per system of the Helix VE 4 to Helix VE 16 series, with IE2-equivalent standard motors and infinitely variable auto control with integrated frequency converter in each pump
- Automatic pump control via Smart Controller SCe
- Parts that come in contact with the fluid are corrosion-resistant
- Base frame made of galvanised steel, with height-adjustable vibration absorbers for insulation against structure-borne noise
- Check valve on the suction and pressure side of each pump
- Non-return valve on the pressure side of each pump
- Diaphragm pressure vessel 8 l, PN16, pressure side (accessories)
- Pressure sensor, pressure side
- Pressure gauge, pressure side
- Optional low-water cut-out switchgear and pressure gauge, suction side

Materials

- Impellers, diffusors, stage housing made of 1.4307 stainless steel
- Pump housing made of stainless steel 1.4301.
- Shaft made of 1.4057 stainless steel
- 1.4404 shaft protection sleeve
- O-ring gaskets made of EPDM (FKM gasket on request)
- Piping made of 1.4301 stainless steel

Series description Wilo-SiBoost Smart Helix VE

Description/design

- Base frame: galvanised steel, with height-adjustable vibration absorbers for comprehensive insulation against structure-borne noise as well as integrated hoisting gear; other versions on request
- Pipework: Complete pipework made of stainless steel, suitable for the connection of all conventional piping materials; the pipework is dimensioned according to the overall hydraulic performance of the pressure boosting system
- Pumps: 2 to 4 pumps are used from the series Helix VE 4.., 6.., 10.., 16.., parallel-switched. The air-cooled frequency converters mounted on the pump motor enable infinitely variable control between 25 Hz and a maximum of 60 Hz for all pumps of this series. All pump parts which come into contact with the fluid are made of stainless steel; other versions on request. KTW/WRAS/ACS approval for all parts that come in contact with the fluid
- Valves: Each pump is fitted on the suction and pressure side with a standard check valve with DVGW approval mark and on the pressure side with a DVGW/KTW-approved non-return valve.
- Diaphragm pressure vessel (accessories): 8 l/PN16 arranged on the discharge side with a diaphragm made of butyl rubber, with DVGW/KTW approval, completely safe in accordance with food safety laws; for testing and inspection purposes, with a shut-off ball cock with drain and throughflow fitting with DVGW/KTW approval in accordance with DIN 4807
- Pressure sensor: 4 to 20 mA, located on the discharge side for controlling the central Smart Controller SC
- Pressure display: pressure gauge (ø 63 mm) arranged on the discharge side; additional digital indication of the discharge pressure in the alphanumeric LC display of the Smart Controller SC
- Switchgear/controller: The system is equipped with a Smart Controller SC as standard

Scope of delivery

- Factory-mounted, connection-ready pressure boosting system checked for functionality and impermeability
- Packaging
- Installation and operating instructions

Terminal diagram

Smart Controller SCe

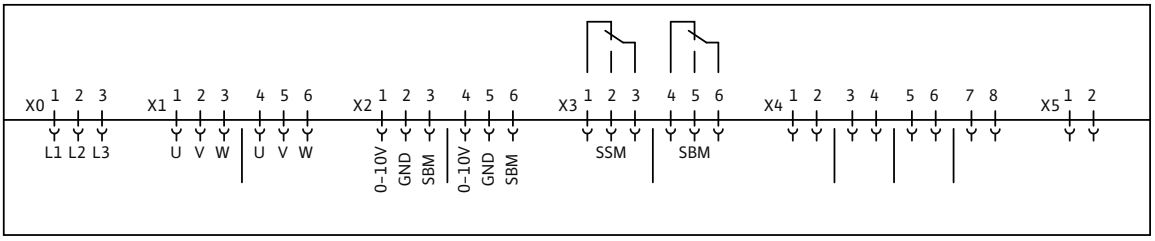

x0: Mains connection
x1: Power supply, pumps
- 1-3, pump 1
- 4-6, pump 2
x2: pump control
- 1-3, pump 1
- 4-6, pump 2
- etc.
x3: Potential-free contacts (signals)
- 1-3, SSM (collective fault signal)
- 4-6, SBM (collective run signal)

x4: Sensor connections
- 1, sensor (In) 2. sensor (+);
- 3-4, external On/Off
- 5-6, dry-running protection
- 7-8, setpoint 2
x5: Analogue outputs
- 1-2. actual pressure (0...10 V)

Technical data Wilo-SiBoost Smart Helix VE

Pump curves

Wilo-SiBoost Smart 2-4 Helix VE 403

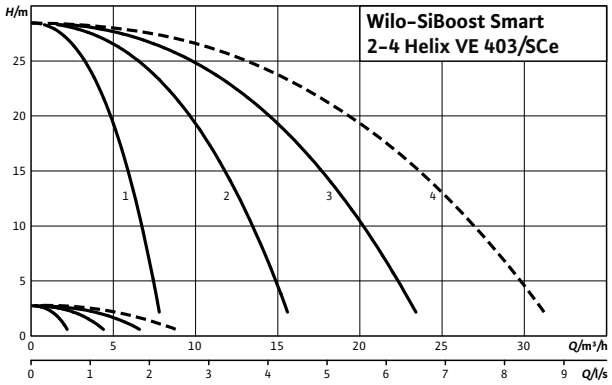

---- including standby pump

Pump curves

Wilo-SiBoost Smart 2-4 Helix VE 404

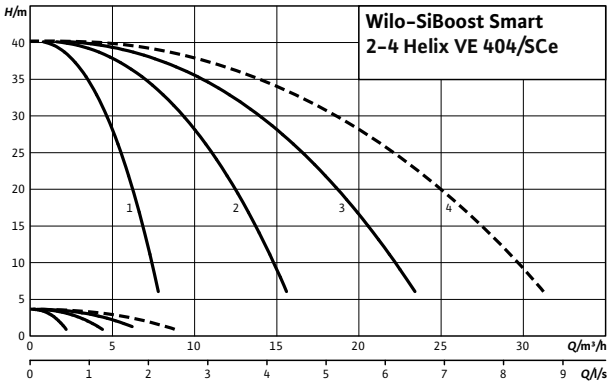

---- including standby pump

Motor data per pump

Wilo-SiBoost Smart 2-4...	Nominal motor power	Nominal current 3~400 V, 50 Hz	Motor efficiency		
	P_2	I_N	$\eta_{m\ 50\%}$	$\eta_{m\ 75\%}$	$\eta_{m\ 100\%}$
	kW	A	%		
Helix VE 403	0.55	1.7	74.0	78.0	79.0
Helix VE 404	0.75	3.2	74.0	78.0	79.0

Motor efficiency based on 400 V, 50 Hz

Technical data Wilo-SiBoost Smart Helix VE

Dimension drawing

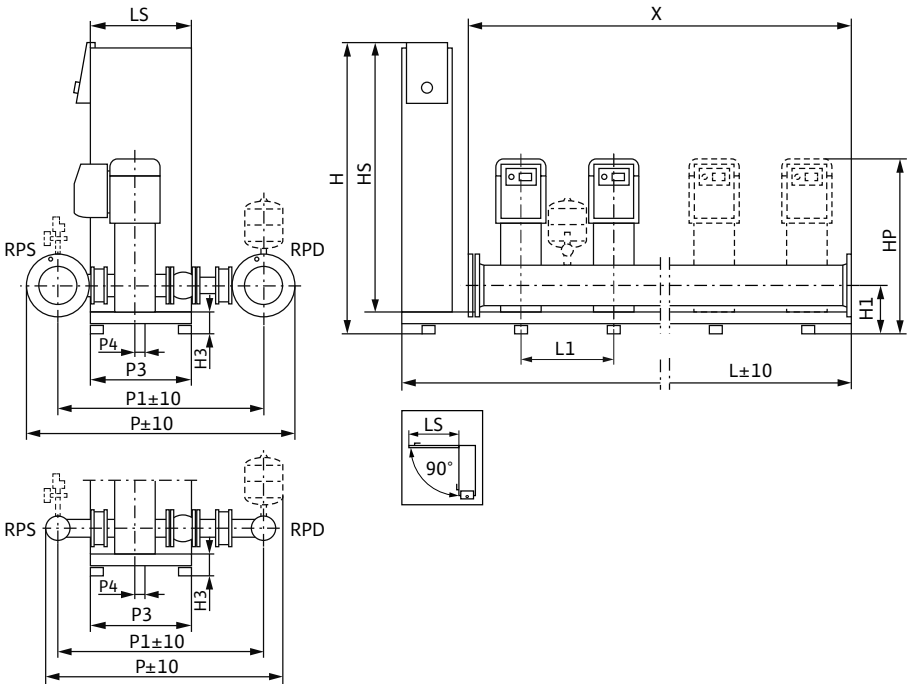

Sample systems are shown.
Accessories (to be ordered separately): Optional WMS low-water cut-out switchgear kit; diaphragm pressure vessel (8 l, PN16)
Installation surface: flat and horizontal
Installation location: dry, well ventilated and frost-proof
To facilitate maintenance, a service area of 1m around the installation is recommended.

Dimensions, weights

Wilo-SiBoost Smart 2-4...	Nominal diameters of the pipe connections on suction side	Nominal diameters of pipe connections on the pressure side	Dimensions													Weight approx.
	RPS	*RPD*	*H*	*H1*	*H3*	*HP*	*HS*	*L*	*L1*	*LS*	*P*	*P1*	*P3*	*P4*	*X*	*m*
			mm													kg
2Helix VE 403	R 1½	R ½	855	140	90	710	750	850	300	300	694	561	300	40	600	112
2Helix VE 404	R 1½	R ½	855	140	90	755	750	850	300	300	694	561	300	40	600	118
3Helix VE 403	R 2	R 2	855	140	90	710	750	1150	300	300	706	573	300	40	900	154
3Helix VE 404	R 2	R 2	855	140	90	755	750	1150	300	300	706	573	300	40	900	163
4Helix VE 403	R 2½	R 2½	855	140	90	710	750	1450	300	300	722	589	300	40	1200	196
4Helix VE 404	R 2½	R 2½	855	140	90	755	750	1450	300	300	722	589	300	40	1200	208

Technical data Wilo-SiBoost Smart Helix VE

Pump curves

Wilo-SiBoost Smart 2-4 Helix VE 405

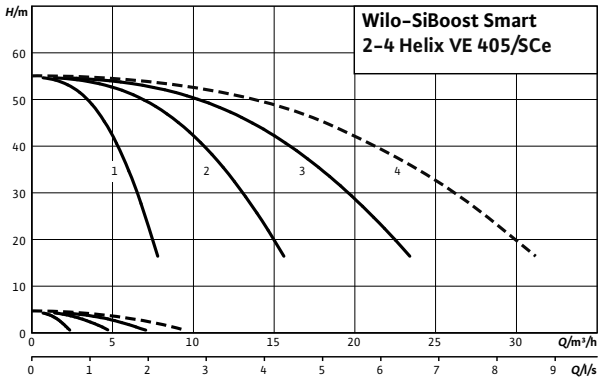

---- including standby pump

Pump curves

Wilo-SiBoost Smart 2-4 Helix VE 407

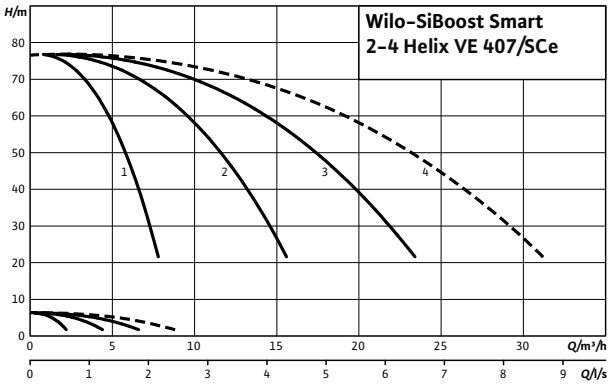

---- including standby pump

Pump curves

Wilo-SiBoost Smart 2-4 Helix VE 410

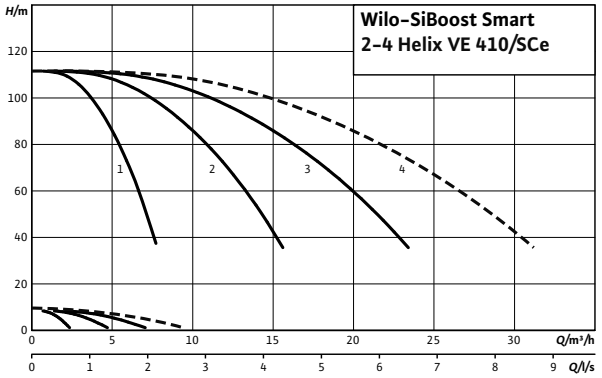

---- including standby pump

Motor data per pump

Wilo-SiBoost Smart 2-4...	Nominal motor power	Nominal current 3~400 V, 50 Hz	Motor efficiency		
	P_2	I_N	$\eta_{m\ 50\%}$	$\eta_{m\ 75\%}$	$\eta_{m\ 100\%}$
	kW	A	%		
Helix VE 405	1.1	3.2	79.0	82.0	82.5
Helix VE 407	1.5	5.6	79.0	82.0	84.0
Helix VE 410	2.2	5.6	81.0	84.0	85.5

Motor efficiency based on 400 V, 50 Hz

Technical data Wilo-SiBoost Smart Helix VE

Dimension drawing

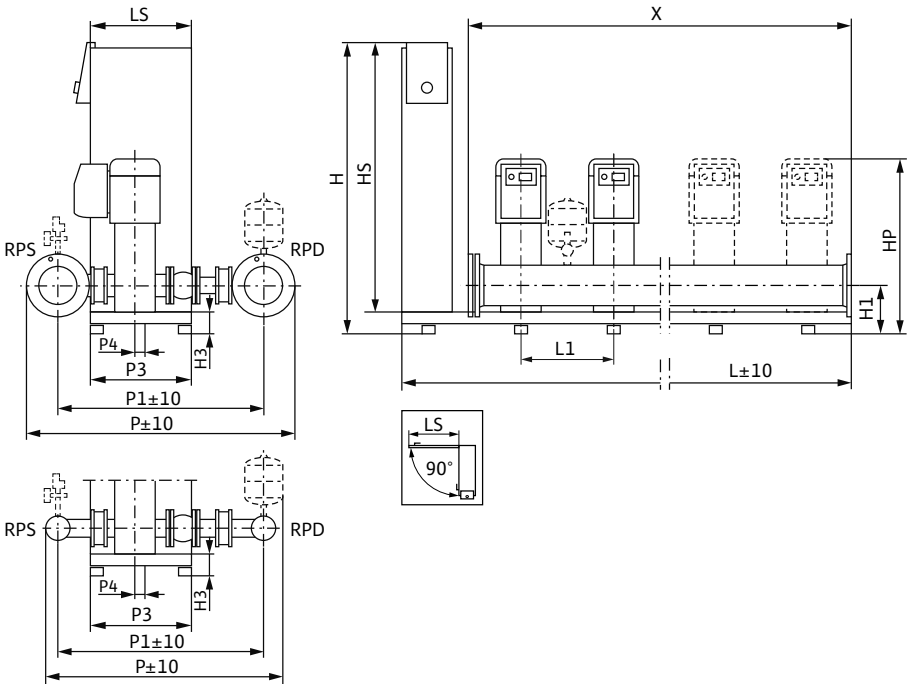

Sample systems are shown.
Accessories (to be ordered separately): Optional WMS low-water cut-out switchgear kit; diaphragm pressure vessel (8 l, PN16)
Installation surface: flat and horizontal
Installation location: dry, well ventilated and frost-proof
To facilitate maintenance, a service area of 1m around the installation is recommended.

Dimensions, weights

Wilo-SiBoost Smart 2-4...	Nominal diameters of the pipe connections on suction side	Nominal diameters of pipe connections on the pressure side	Dimensions													Weight approx.
	RPS	*RPD*	*H*	*H1*	*H3*	*HP*	*HS*	*L*	*L1*	*LS*	*P*	*P1*	*P3*	*P4*	*X*	*m*
			mm													kg
2Helix VE 405	R 1½	R ½	855	140	90	776	750	850	300	300	694	561	300	40	600	119
2Helix VE 407	R 1½	R ½	855	140	90	875	750	850	300	300	694	561	300	40	600	138
2Helix VE 410	R 1½	R ½	855	140	90	955	750	850	300	300	694	561	300	40	600	142
3Helix VE 405	R 2	R 2	855	140	90	776	750	1150	300	300	706	573	300	40	900	165
3Helix VE 407	R 2	R 2	855	140	90	875	750	1150	300	300	706	573	300	40	900	193
3Helix VE 410	R 2	R 2	855	140	90	955	750	1150	300	300	706	573	300	40	900	199
4Helix VE 405	R 2½	R 2½	855	140	90	776	750	1450	300	300	722	589	300	40	1200	210
4Helix VE 407	R 2½	R 2½	855	140	90	875	750	1450	300	300	722	589	300	40	1200	248
4Helix VE 410	R 2½	R 2½	855	140	90	955	750	1450	300	300	722	589	300	40	1200	256

Technical data Wilo-SiBoost Smart Helix VE

Pump curves

Wilo-SiBoost Smart 2-4 Helix VE 602

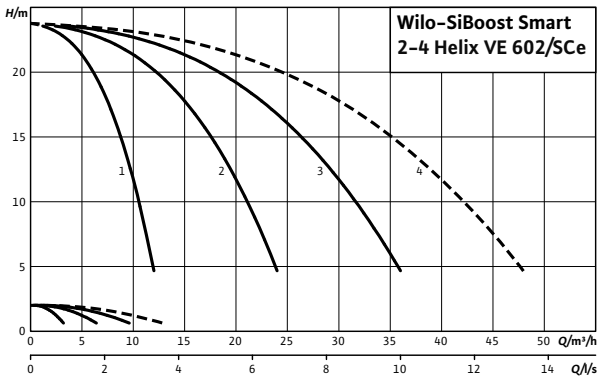

---- including standby pump

Pump curves

Wilo-SiBoost Smart 2-4 Helix VE 603

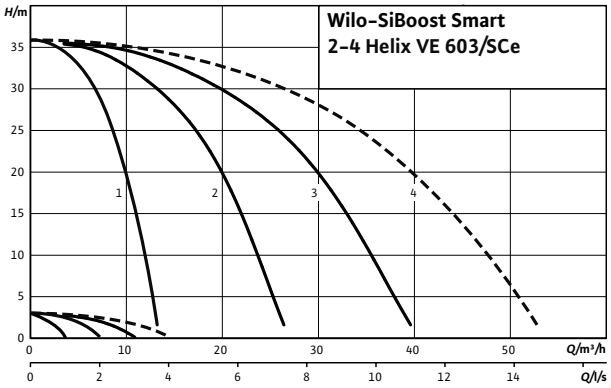

---- including standby pump

Pump curves

Wilo-SiBoost Smart 2-4 Helix VE 604

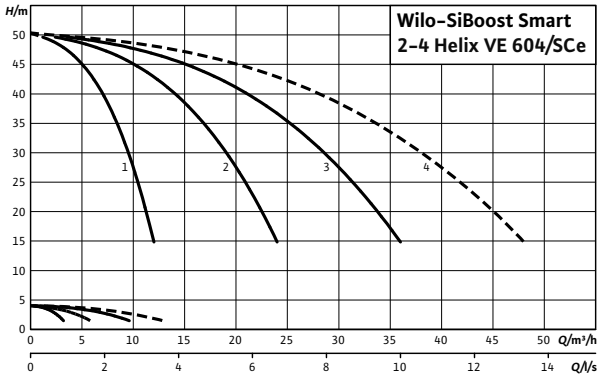

---- including standby pump

Motor data per pump

Wilo-SiBoost Smart 2-4...	Nominal motor power	Nominal current 3~400 V, 50 Hz	Motor efficiency		
	P_2	I_N	$\eta_{m\ 50\%}$	$\eta_{m\ 75\%}$	$\eta_{m\ 100\%}$
	kW	A	%		
Helix VE 602	0.75	3.2	74.0	78.0	79.0
Helix VE 603	1.1	3.2	79.0	82.0	82.5
Helix VE 604	1.5	5.6	79.0	82.0	84.0

Motor efficiency based on 400 V, 50 Hz

Technical data Wilo-SiBoost Smart Helix VE

Dimension drawing

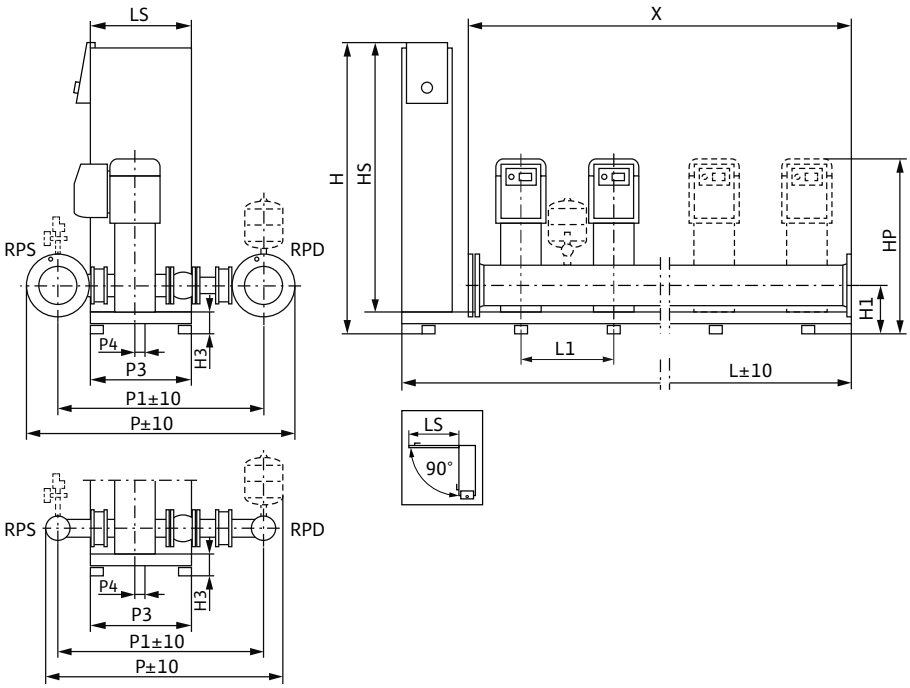

Sample systems are shown.
Accessories (to be ordered separately): Optional WMS low-water cut-out switchgear kit; diaphragm pressure vessel (8 l, PN16)
Installation surface: flat and horizontal
Installation location: dry, well ventilated and frost-proof
To facilitate maintenance, a service area of 1m around the installation is recommended.

Dimensions, weights

Wilo-SiBoost Smart 2-4...	Nominal diameters of the pipe connections on suction side	Nominal diameters of pipe connections on the pressure side	Dimensions													Weight approx.
	RPS	*RPD*	*H*	*H1*	*H3*	*HP*	*HS*	*L*	*L1*	*LS*	*P*	*P1*	*P3*	*P4*	*X*	*m*
			mm													kg
2Helix VE 602	R 2	R 2	855	140	90	730	750	850	300	300	706	573	300	40	600	118
2Helix VE 603	R 2	R 2	855	140	90	764	750	850	300	300	706	573	300	40	600	120
2Helix VE 604	R 2	R 2	855	140	90	840	750	850	300	300	706	573	300	40	600	140
3Helix VE 602	R 2½	R 2½	855	140	90	730	750	1150	300	300	722	589	300	40	900	163
3Helix VE 603	R 2½	R 2½	855	140	90	764	750	1150	300	300	722	589	300	40	900	166
3Helix VE 604	R 2½	R 2½	855	140	90	840	750	1150	300	300	722	589	300	40	900	230
4Helix VE 602	R 2½	R 2½	855	140	90	730	750	1450	300	300	722	589	300	40	1200	207
4Helix VE 603	R 2½	R 2½	855	140	90	764	750	1450	300	300	722	589	300	40	1200	211
4Helix VE 604	R 2½	R 2½	855	140	90	840	750	1450	300	300	722	589	300	40	1200	251

Technical data Wilo-SiBoost Smart Helix VE

Pump curves

Wilo-SiBoost Smart 2-4 Helix VE 606

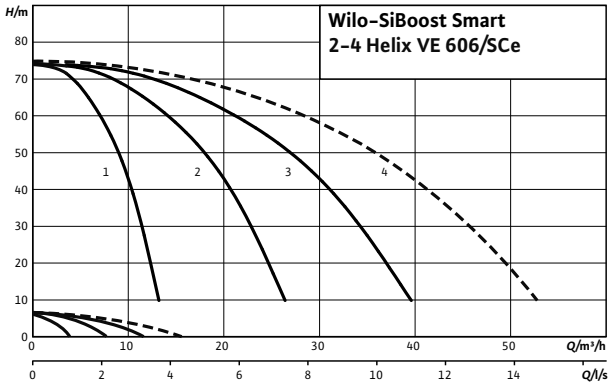

---- including standby pump

Pump curves

Wilo-SiBoost Smart 2-4 Helix VE 608

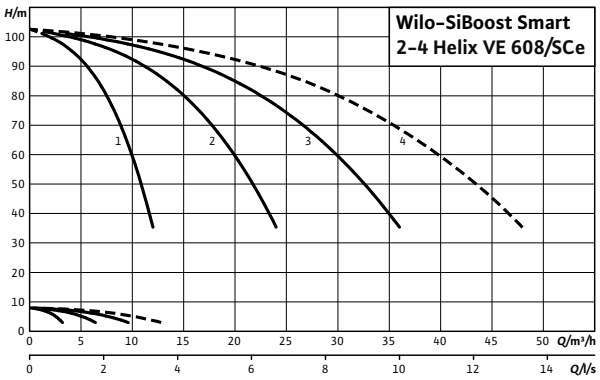

---- including standby pump

Pump curves

Wilo-SiBoost Smart 2-4 Helix VE 611

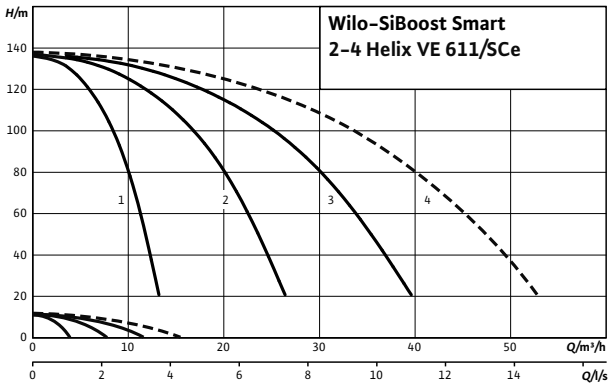

---- including standby pump

Motor data per pump

Wilo-SiBoost Smart 2-4...	Nominal motor power	Nominal current 3~400 V, 50 Hz	Motor efficiency		
	P_2	I_N	$\eta_{m\ 50\%}$	$\eta_{m\ 75\%}$	$\eta_{m\ 100\%}$
	kW	A	%		
Helix VE 606	2.2	5.6	81.0	84.0	85.5
Helix VE 608	3	9	84.2	87.5	87.5
Helix VE 611	4	9.7	84.5	87.1	87.5

Motor efficiency based on 400 V, 50 Hz

Technical data Wilo-SiBoost Smart Helix VE

Dimension drawing

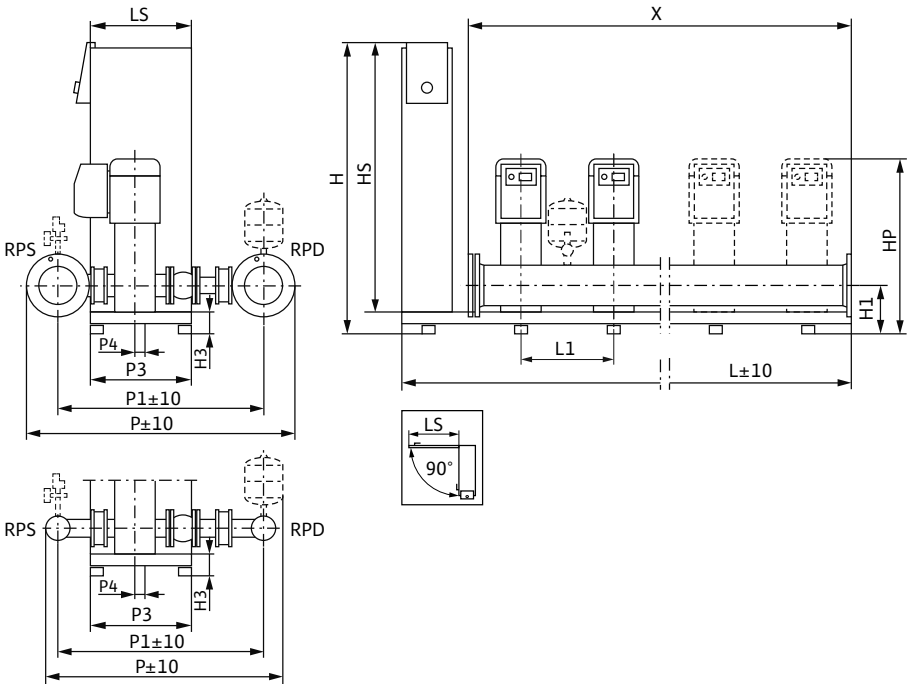

Sample systems are shown.
Accessories (to be ordered separately): Optional WMS low-water cut-out switchgear kit; diaphragm pressure vessel (8 l, PN16)
Installation surface: flat and horizontal
Installation location: dry, well ventilated and frost-proof
To facilitate maintenance, a service area of 1m around the installation is recommended.

Dimensions, weights

Wilo-SiBoost Smart 2-4...	Nominal diameters of the pipe connections on suction side	Nominal diameters of pipe connections on the pressure side	Dimensions													Weight approx.
	RPS	*RPD*	*H*	*H1*	*H3*	*HP*	*HS*	*L*	*L1*	*LS*	*P*	*P1*	*P3*	*P4*	*X*	*m*
			mm													kg
2Helix VE 606	R 2	R 2	855	140	90	930	750	850	300	300	706	573	300	40	600	144
2Helix VE 608	R 2	R 2	1055	140	90	1038	950	850	300	400	706	573	420	30	600	213
2Helix VE 611	R 2	R 2	1055	140	90	1215	950	850	300	400	706	573	420	30	600	219
3Helix VE 606	R 2½	R 2½	855	140	90	930	750	1150	300	300	722	589	300	40	900	236
3Helix VE 608	R 2½	R 2½	1055	140	90	1038	950	1150	300	400	722	589	420	30	900	305
3Helix VE 611	R 2½	R 2½	1055	140	90	1215	950	1150	300	400	722	589	420	30	900	314
4Helix VE 606	R 2½	R 2½	855	140	90	930	750	1450	300	300	722	589	300	40	1200	259
4Helix VE 608	R 2½	R 2½	1055	140	90	1038	950	1450	300	400	722	589	420	30	1200	389
4Helix VE 611	R 2½	R 2½	1055	140	90	1215	950	1450	300	400	722	589	420	30	1200	401

Technical data Wilo-SiBoost Smart Helix VE

Pump curves

Wilo-SiBoost Smart 2-4 Helix VE 1002

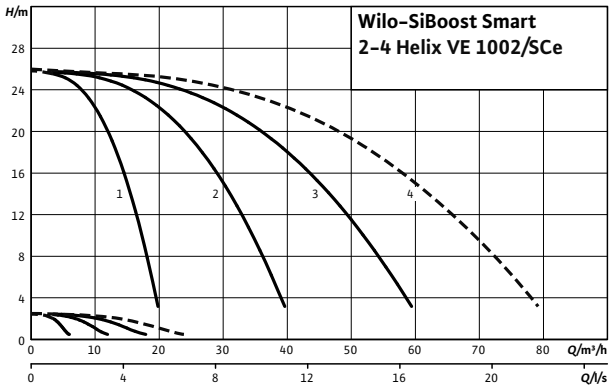

---- including standby pump

Pump curves

Wilo-SiBoost Smart 2-4 Helix VE 1003

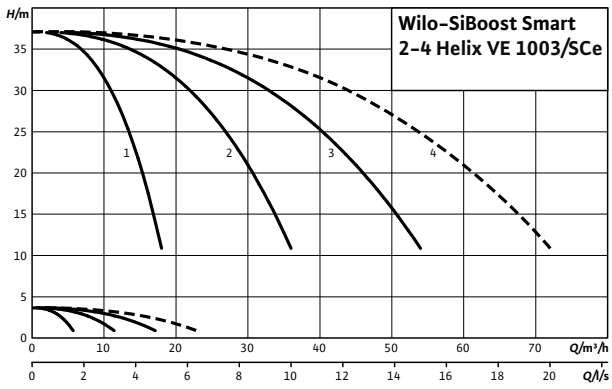

---- including standby pump

Pump curves

Wilo-SiBoost Smart 2-4 Helix VE 1004

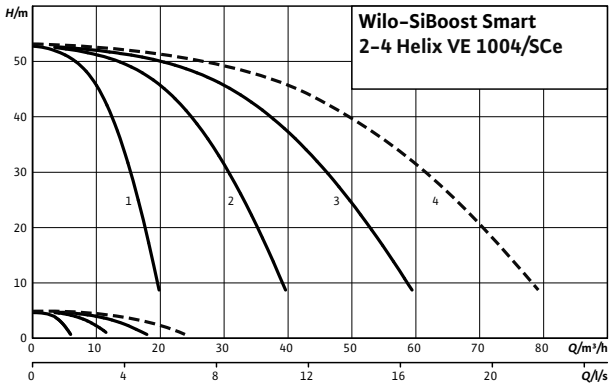

---- including standby pump

Motor data per pump

Wilo-SiBoost Smart 2-4...	Nominal motor power	Nominal current 3~400 V, 50 Hz	Motor efficiency		
	P_2	I_N	$\eta_{m\ 50\%}$	$\eta_{m\ 75\%}$	$\eta_{m\ 100\%}$
	kW	A	%		
Helix VE 1002	1.1	3.2	79.0	82.0	82.5
Helix VE 1003	1.5	5.6	79.0	82.0	84.0
Helix VE 1004	2.2	5.6	81.0	84.0	85.5

Motor efficiency based on 400 V, 50 Hz

Technical data Wilo-SiBoost Smart Helix VE

Dimension drawing

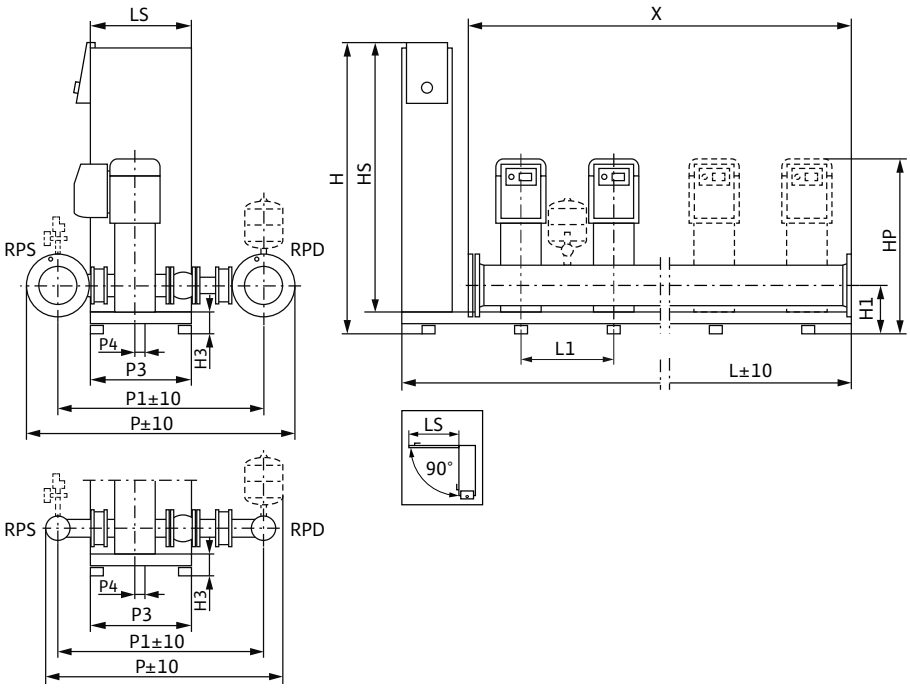

Sample systems are shown.
Accessories (to be ordered separately): Optional WMS low-water cut-out switchgear kit; diaphragm pressure vessel (8 l, PN16)
Installation surface: flat and horizontal
Installation location: dry, well ventilated and frost-proof
To facilitate maintenance, a service area of 1m around the installation is recommended.

Dimensions, weights

Wilo-SiBoost Smart 2-4...	Nominal diameters of the pipe connections on suction side	Nominal diameters of pipe connections on the pressure side	Dimensions													Weight approx.
	RPS	*RPD*	*H*	*H1*	*H3*	*HP*	*HS*	*L*	*L1*	*LS*	*P*	*P1*	*P3*	*P4*	*X*	*m*
			mm													kg
2Helix VE 1002	R 2½	R 2½	855	170	90	747	750	850	300	300	845	704	300	40	600	132
2Helix VE 1003	R 2½	R 2½	855	170	90	834	750	850	300	300	845	704	300	40	600	150
2Helix VE 1004	R 2½	R 2½	855	170	90	876	750	850	300	300	845	704	300	40	600	168
3Helix VE 1002	R 2½	R 2½	855	170	90	747	750	1150	300	300	845	704	300	40	900	183
3Helix VE 1003	R 2½	R 2½	855	170	90	834	750	1150	300	300	845	704	300	40	900	210
3Helix VE 1004	R 2½	R 2½	855	170	90	876	750	1150	300	300	845	704	300	40	900	213
4Helix VE 1002	R 3	R 3	855	170	90	747	750	1450	300	300	865	717	300	40	1200	234
4Helix VE 1003	R 3	R 3	855	170	90	834	750	1450	300	300	865	717	300	40	1200	270
4Helix VE 1004	R 3	R 3	855	170	90	876	750	1450	300	300	865	717	300	40	1200	274

Technical data Wilo-SiBoost Smart Helix VE

Pump curves

Wilo-SiBoost Smart 2-4 Helix VE 1005

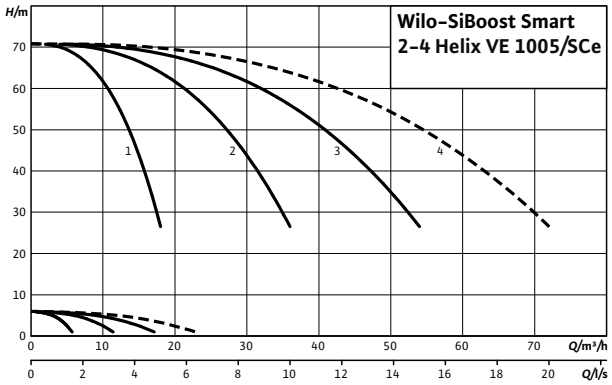

---- including standby pump

Pump curves

Wilo-SiBoost Smart 2-4 Helix VE 1006

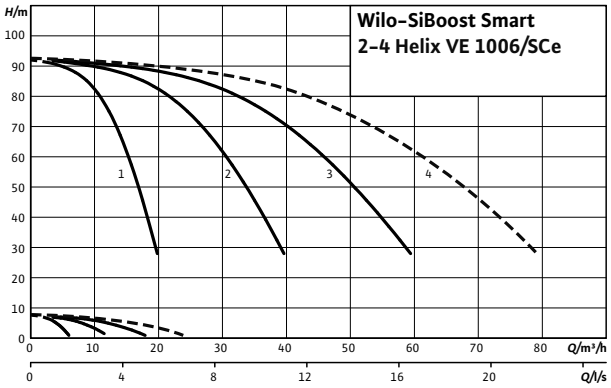

---- including standby pump

Motor data per pump

Wilo-SiBoost Smart 2-4...	Nominal motor power	Nominal current 3~400 V, 50 Hz	Motor efficiency		
	P_2	I_N	$\eta_{m\ 50\%}$	$\eta_{m\ 75\%}$	$\eta_{m\ 100\%}$
	kW	A	%		
Helix VE 1005	3	9	84.2	87.5	87.5
Helix VE 1006	4	9.7	84.5	87.1	87.5

Motor efficiency based on 400 V, 50 Hz

Technical data Wilo-SiBoost Smart Helix VE

Dimension drawing

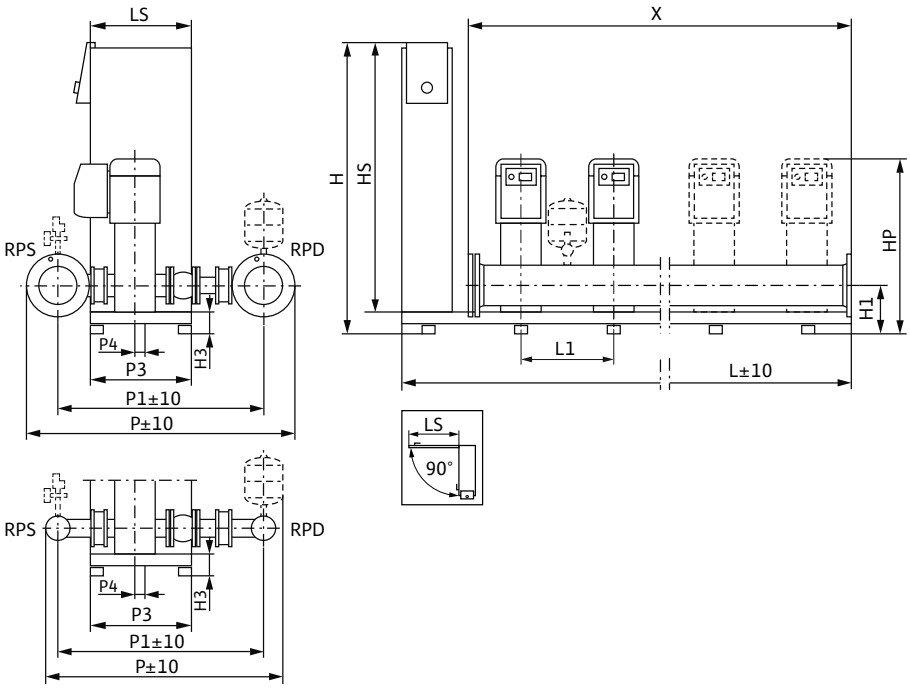

Sample systems are shown.
Accessories (to be ordered separately): Optional WMS low-water cut-out switchgear kit; diaphragm pressure vessel (8 l, PN16)
Installation surface: flat and horizontal
Installation location: dry, well ventilated and frost-proof
To facilitate maintenance, a service area of 1m around the installation is recommended.

Dimensions, weights

Wilo-SiBoost Smart 2-4...	Nominal diameters of the pipe connections on suction side	Nominal diameters of pipe connections on the pressure side	Dimensions													Weight approx.
	RPS	*RPD*	*H*	*H1*	*H3*	*HP*	*HS*	*L*	*L1*	*LS*	*P*	*P1*	*P3*	*P4*	*X*	*m*
			mm													kg
2Helix VE 1005	R 2½	R 2½	1055	170	90	957	950	850	300	400	845	704	420	30	600	226
2Helix VE 1006	R 2½	R 2½	1055	170	90	1011	950	850	300	400	845	704	420	30	600	228
3Helix VE 1005	R 2½	R 2½	1055	170	90	957	950	1150	300	400	845	704	420	30	900	313
3Helix VE 1006	R 2½	R 2½	1055	170	90	1011	950	1150	300	400	845	704	420	30	900	316
4Helix VE 1005	R 3	R 3	1055	170	90	957	950	1450	300	400	865	717	420	30	1200	399
4Helix VE 1006	R 3	R 3	1055	170	90	1011	950	1450	300	400	865	717	420	30	1200	403

Technical data Wilo-SiBoost Smart Helix VE

Pump curves

Wilo-SiBoost Smart 2-4 Helix VE 1602

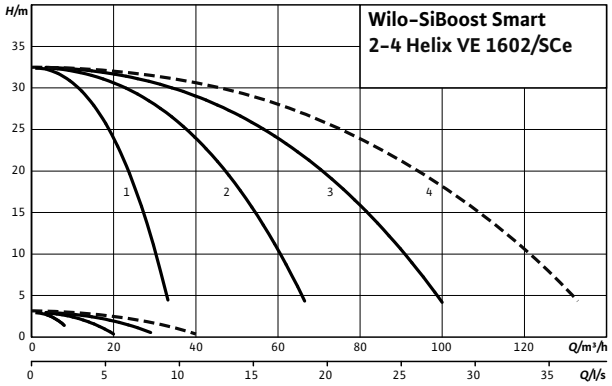

---- including standby pump

Pump curves

Wilo-SiBoost Smart 2-4 Helix VE 1603-3kW

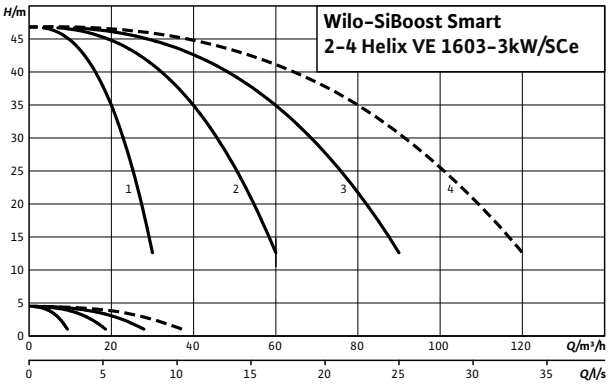

---- including standby pump

Pump curves

Wilo-SiBoost Smart 2-4 Helix VE 1603

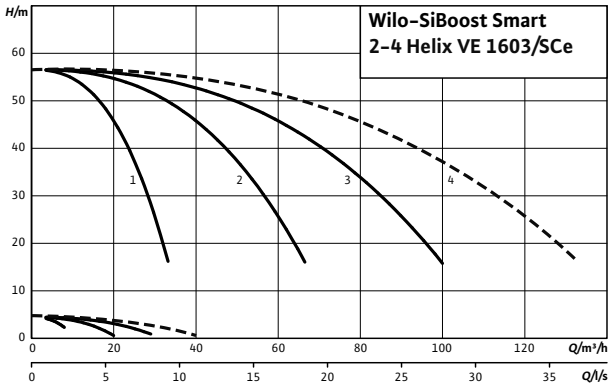

---- including standby pump

Motor data per pump

Wilo-SiBoost Smart 2-4...	Nominal motor power	Nominal current 3~400 V, 50 Hz	Motor efficiency		
	P_2	I_N	$\eta_{m\ 50\%}$	$\eta_{m\ 75\%}$	$\eta_{m\ 100\%}$
	kW	A	%		
Helix VE 1602	2.2	5.6	81.0	84.0	85.5
Helix VE 1603/3kW	3	9	84.2	87.5	87.5
Helix VE 1603/4kW	4	9.7	84.5	87.1	87.5

Motor efficiency based on 400 V, 50 Hz

Technical data Wilo-SiBoost Smart Helix VE

Dimension drawing

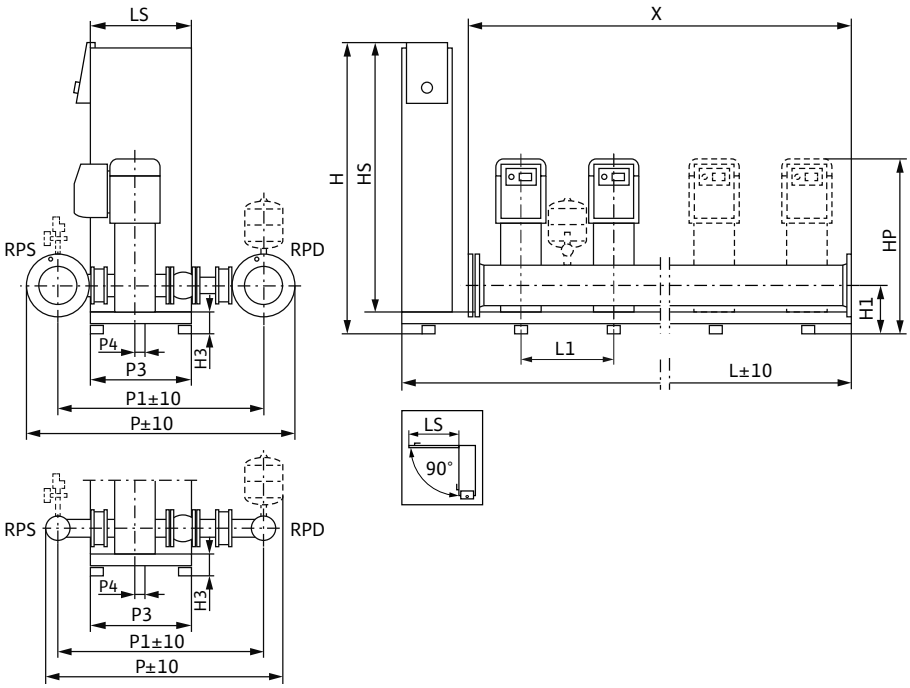

Sample systems are shown.
Accessories (to be ordered separately): Optional WMS low-water cut-out switchgear kit; diaphragm pressure vessel (8 l, PN16)
Installation surface: flat and horizontal
Installation location: dry, well ventilated and frost-proof
To facilitate maintenance, a service area of 1m around the installation is recommended.

Dimensions, weights

Wilo-SiBoost Smart 2-4...	Nominal diameters of the pipe connections on suction side	Nominal diameters of pipe connections on the pressure side	Dimensions													Weight approx.
	RPS	*RPD*	*H*	*H1*	*H3*	*HP*	*HS*	*L*	*L1*	*LS*	*P*	*P1*	*P3*	*P4*	*X*	*m*
			mm													kg
2Helix VE 1602	R 3	R 3	1055	185	90	846	950	850	300	400	883	735	420	30	600	179
2Helix VE 1603/3kW	R 3	R 3	1055	185	90	929	950	850	300	400	883	735	420	30	600	226
2Helix VE 1603-4kW	R 3	R 3	1055	185	90	946	950	850	300	400	883	735	420	30	600	227
3Helix VE 1602	DN 100	DN 100	1055	185	90	846	950	1150	300	400	986	766	420	30	900	278
3Helix VE 1603/3kW	DN 100	DN 100	1055	185	90	929	950	1150	300	400	986	766	420	30	900	345
3Helix VE 1603-4kW	DN 100	DN 100	1055	185	90	946	950	1150	300	400	986	766	420	30	900	336
4Helix VE 1602	DN 100	DN 100	1055	185	90	846	950	1450	300	400	986	766	420	30	1200	342
4Helix VE 1603/3kW	DN 100	DN 100	1055	185	90	929	950	1450	300	400	986	766	420	30	1200	435
4Helix VE 1603-4kW	DN 100	DN 100	1055	185	90	946	950	1450	300	400	986	766	420	30	1200	437

Pressure boosting

Multi-pump systems, speed-controlled

Series description Wilo-Comfort COR Helix VE.../CCe

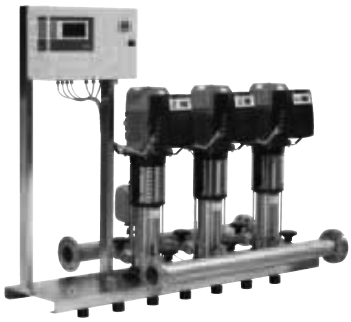

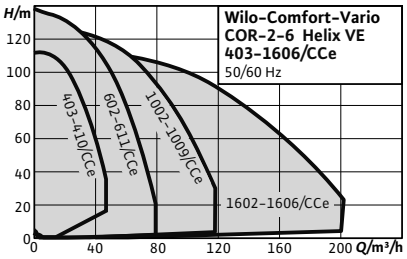

Design

Highly efficient water-supply unit ready for connection (non self-priming). With 2 to 6 vertically arranged Helix VE series stainless steel high-pressure centrifugal pumps in glanded version switched in parallel; every pump is equipped with an integrated air-cooled frequency converter, including Comfort-Controller CCe

Type key

Example:	**Wilo-COR-4 Helix VE 1603/K/VR**
COR	Compact pressure boosting system with integrated speed control of each pump
4	Number of pumps
Helix VE	Pump series
16	Rated volume flow [m^3/h] of the single pump
03	Number of single pump stages
K	With cartridge mechanical seal
5.5	Rated motor power P_2 in kW [only included if more than one motor is available for types with the same hydraulic output]
CCe	Control device; CCe = Comfort-Controller for pumps with integrated frequency converter

Application

- Fully automatic water supply and pressure boosting in residential, commercial and public buildings, hotels, hospitals, department stores and for industrial systems.
- Pumping of potable water, process water, cooling water, fire water (apart from fire-extinguishing systems in accordance with DIN14462) or other water mixtures that do not attack the materials used chemically or mechanically and do not contain abrasive or long-fibre constituents

Special features/product advantages

- Sturdy system with stainless steel high-pressure multistage centrifugal pumps of the Helix VE series and air-cooled, integrated frequency converter
- High-efficiency pump hydraulics in conjunction with IE2-equivalent standard motors
- Hydraulics of entire system are pressure-loss optimised.
- Super-proportionally large frequency converter control range of 25 Hz up to a maximum of 60 Hz
- Integrated dry-running detection with automatic deactivation in the event of low water via performance characteristics of the motor control electronics
- Maximum control quality and very simple operation due to the CCe control device used, with extended functions, PLC microcomputer control and graphics-capable touchscreen, menu-prompted input of the operating parameters

Technical data

- Mains connection 3~400 V ± 10%, 50 Hz; 3~380/440 V ±10 %, 60 Hz
- Max. fluid temperature +50 °C (+70 °C optional)
- Max. ambient temperature 40 °C
- Operating pressure 16 bar (25 bar optional)
- Inlet pressure 10 bar
- Nominal connection diameters on discharge side R 1½ - DN 125
- Nominal connection diameters on inlet side R 1½" - DN 125
- Speed range 1500-3770 rpm
- Protection class: IP 54
- Fuse protection on mains side A, AC 3 according to motor power and EVU regulations
- Approved fluids (other fluids on request):
  - Potable water and secondary hot water
  - Cooling water
  - Fire water
- Note on fluids: Approved fluids are generally waters which do not attack the materials used, neither chemically nor mechanically, and do not contain any abrasive or long-fibre constituents. System in accordance with DIN 1988 (EN 806)

Equipment/function

- 2-6 pumps per system of the Helix VE 4 to Helix VE 16 series, with IE2-equivalent standard motors and variable control mode with integrated frequency converter for each pump
- Automatic pump control via Comfort-Controller CCe
- Parts that come in contact with the fluid are corrosion-resistant
- Base frame made of galvanised steel, with height-adjustable vibration absorbers for insulation against structure-borne noise
- Check valve on the suction and pressure side of each pump
- Non-return valve on the pressure side of each pump
- Diaphragm pressure vessel 8 l, PN16, pressure side
- Pressure sensor, pressure side
- Pressure gauge, pressure side
- Optional low-water cut-out switchgear with pressure gauge, suction side

Series description Wilo-Comfort COR Helix VE.../CCe

Materials

For the series with Helix VE 4 to VE 16:
- Impellers, diffusors, stage housing made of stainless steel (1.4307)
- Pump housing made of stainless steel 1.4301.
- Shaft made of stainless steel (1.4057)
- 1.4404 shaft protection sleeve
- O-ring gaskets made of EPDM (FKM gasket on request)
- Pipework made of stainless steel (1.4571)

Description/design

- Base frame: galvanised steel, with height-adjustable vibration absorbers for comprehensive insulation against structure-borne noise; other versions on request
- Pipework: complete pipework made of stainless steel, suitable for the connection of all piping materials used; the pipework is dimensioned according to the overall hydraulic performance of the pressure boosting system
- Pumps: 2 to 6 pumps of the Helix VE 4.., 6.., 10.., 16.. series are used, which are connected in parallel. The air-cooled frequency converters mounted on the pump motor enable infinitely variable control between 25 Hz and a maximum of 60 Hz for all pumps of this series. All parts which come in contact with fluid are made of stainless steel for the Helix VE 4.., 6.., 10.., 16..; other versions on request. KTW/WRAS/ACS approval for all parts that come in contact with the fluid
- Valves: With the Helix VE 4.., 6.., 10.., 16.. series, every pump is fitted on the suction and pressure side with a check valve with DVGW approval mark and on the pressure side with a non-return valve with DVGW/KTW approval
- Diaphragm pressure vessel: 8 l/PN16 to be arranged on the discharge side. With a diaphragm made of butyl rubber, with DVGW/KTW approval, completely safe in accordance with food safety laws for testing and inspection purposes, with drain and throughflow valve with DVGW/KTW approval in accordance with DIN 4807.
- Pressure sensor: 4 to 20 mA, located on the discharge side for controlling the central Comfort-Controller CCe
- Pressure display: pressure gauge (ø 63 mm) arranged on the discharge side; additional digital indication of the discharge pressure on the alphanumeric touchscreen on the Comfort-Controller
- Switchgear/controller: The system is equipped with a Comfort-Controller CCe as standard

Scope of delivery

- Factory-mounted, connection-ready pressure boosting system checked for functionality and impermeability
- Packaging
- Installation and operating instructions
- Transport eyes for self-assembly

Terminal diagram

CCe System

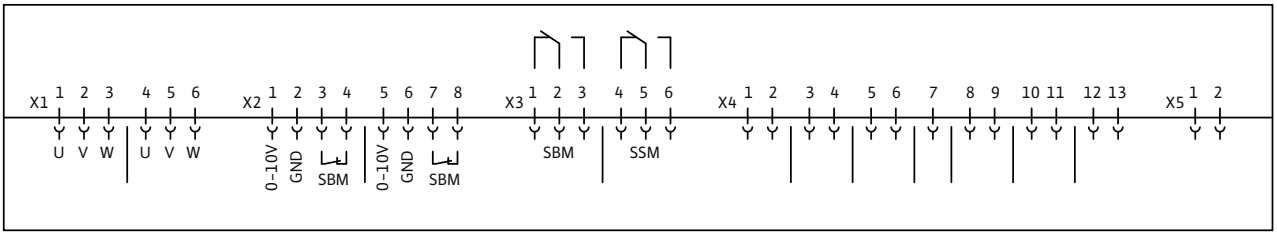

x0: Mains connection
x1: Power supply, pumps
- 1-3, pump 1
- 4-6, pump 2
x2: pump control
- 1-4, pump 1
- 5-8, pump 2
- etc.
x3: Potential-free contacts
- 1-3, SBM (collective run signal)
- 4-6, SSM (collective fault signal)

x4: Sensor connections
- 1-2. external On/Off
- 3-4, dry-running protection
- 5, sensor (+); 6, sensor (In)
- 7, GND
- 8, analogue In (+); 9, analogue In (In)
- 10-11, setpoint 2
- 12-13, setpoint 3
x5: Analogue outputs
- 1-2. actual pressure (0...10 V)

Technical data Wilo-Comfort COR Helix VE.../CCe

Pump curves

Wilo-Comfort COR 2-6 Helix VE 403/CCe

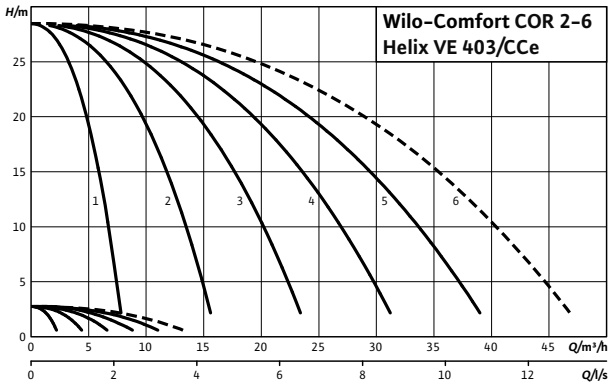

---- including standby pump

Motor data for each pump					
Wilo-Comfort COR-...	**Nominal motor power**	**Nominal current 3~400 V, 50 Hz**	**Motor efficiency**		
	P_2	I_N	$\eta_{m\ 50\%}$	$\eta_{m\ 75\%}$	$\eta_{m\ 100\%}$
	kW	A	%		
Helix VE 403/K/CCe	0.55	1.7	74.0	78.0	79.0

Motor efficiency based on 400 V, 50 Hz

Technical data Wilo-Comfort COR Helix VE.../CCe

Dimension drawing

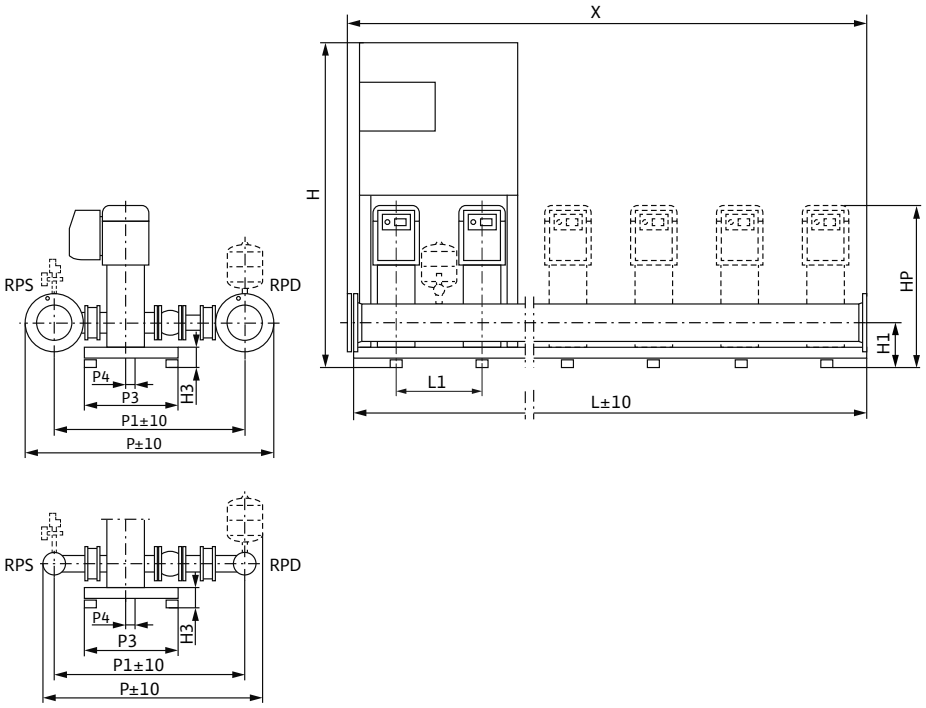

Sample systems are shown. Switchbox position depends on pump height.
Accessories (to be ordered separately): Optional WMS low-water cut-out switchgear kit
Installation surface: flat and horizontal
Installation location: dry, well ventilated and frost-proof

Dimensions, weights

Wilo-Comfort COR-...	Nominal diameters of the pipe connections on suction side	Nominal diameters of pipe connections on the pressure side	Dimensions											Weight approx.
	RPS	*RPD*	*H*	*H1*	*H3*	*HP*	*L*	*L1*	*P*	*P1*	*P3*	*P4*	*X*	*m*
			mm											kg
COR-2 Helix VE 403/K/CCe	R 1½	Rp 1½	1670	140	90	710	600	300	737	610	300	20	600	118
COR-3 Helix VE 403/K/CCe	R 2	R 2	1670	140	90	710	900	300	756	623	300	20	900	159
COR-4 Helix VE 403/K/CCe	R 2½	R 2½	1670	140	90	710	1200	300	780	639	300	20	1200	208
COR-5 Helix VE 403/K/CCe	R 2½	R 2½	1670	140	90	710	1500	300	780	639	300	20	1500	263
COR-6 Helix VE 403/K/CCe	R 2½	R 2½	1670	140	90	710	1800	300	780	639	300	20	1800	304

Technical data Wilo-Comfort COR Helix VE.../CCe

Pump curves

Wilo-Comfort COR 2-6 Helix VE 404/CCe

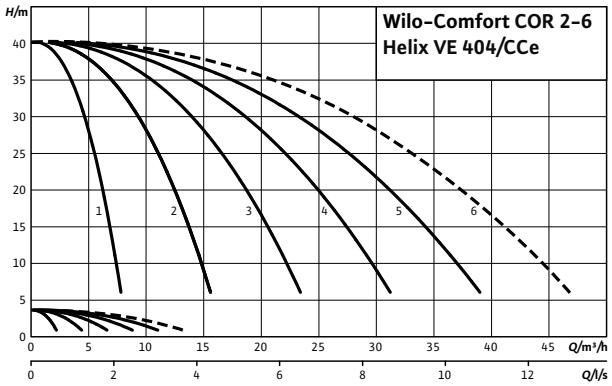

---- including standby pump

Motor data for each pump					
Wilo-Comfort COR-...	**Nominal motor power**	**Nominal current 3~400 V, 50 Hz**	**Motor efficiency**		
	P_2	I_N	$\eta_{m\ 50\%}$	$\eta_{m\ 75\%}$	$\eta_{m\ 100\%}$
	kW	A	%		
Helix VE 404/K/CCe	0.75	3.2	74.0	78.0	79.0

Motor efficiency based on 400 V, 50 Hz

Technical data Wilo-Comfort COR Helix VE.../CCe

Dimension drawing

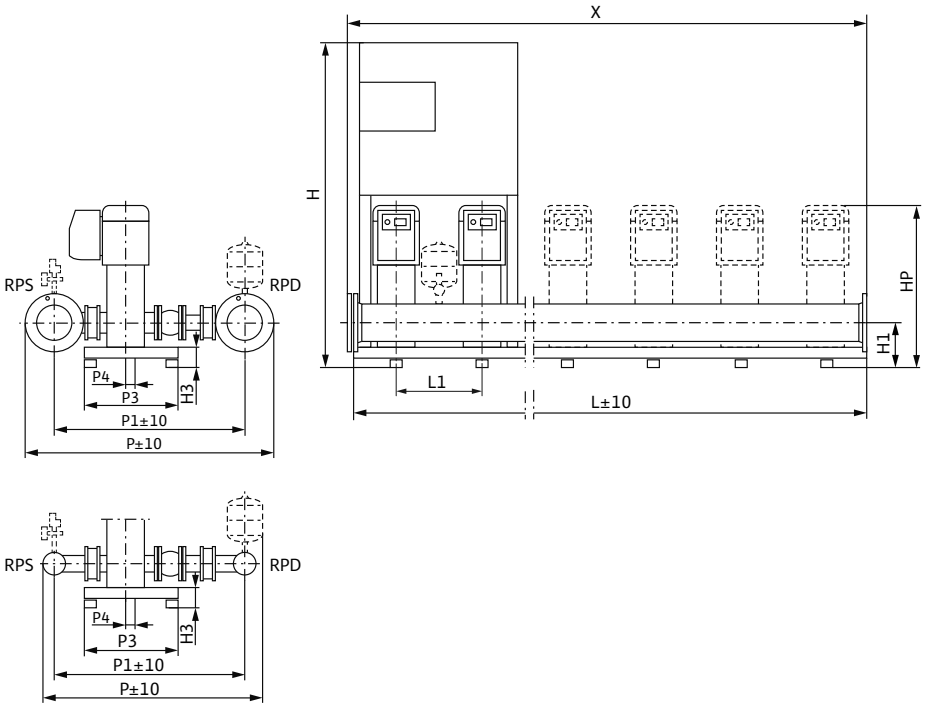

Sample systems are shown. Switchbox position depends on pump height.
Accessories (to be ordered separately): Optional WMS low-water cut-out switchgear kit
Installation surface: flat and horizontal
Installation location: dry, well ventilated and frost-proof

Dimensions, weights

Wilo-Comfort COR-...	Nominal diameters of the pipe connections on suction side	Nominal diameters of pipe connections on the pressure side	Dimensions											Weight approx.
	RPS	*RPD*	*H*	*H1*	*H3*	*HP*	*L*	*L1*	*P*	*P1*	*P3*	*P4*	*X*	*m*
			mm											kg
COR-2 Helix VE 404/K/CCe	R 1½	Rp 1½	1670	140	90	755	600	300	737	610	300	20	600	124
COR-3 Helix VE 404/K/CCe	R 2	R 2	1670	140	90	755	900	300	756	623	300	20	900	168
COR-4 Helix VE 404/K/CCe	R 2½	R 2½	1670	140	90	755	1200	300	780	639	300	20	1200	220
COR-5 Helix VE 404/K/CCe	R 2½	R 2½	1670	140	90	755	1500	300	780	639	300	20	1500	278
COR-6 Helix VE 404/K/CCe	R 2½	R 2½	1670	140	90	755	1800	300	780	639	300	20	1800	322

Technical data Wilo-Comfort COR Helix VE.../CCe

Pump curves

Wilo-Comfort COR 2-6 Helix VE 405/CCe

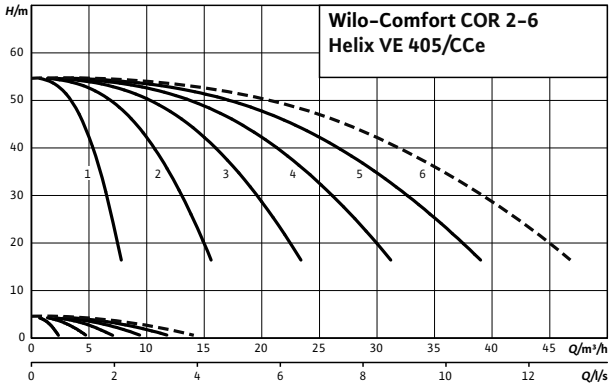

---- including standby pump

Motor data per pump					
Wilo-Comfort COR 2-6...	**Nominal motor power**	**Nominal current 3~400 V, 50 Hz**	**Motor efficiency**		
	P_2	I_N	$\eta_{m\ 50\%}$	$\eta_{m\ 75\%}$	$\eta_{m\ 100\%}$
	kW	A	%		
Helix VE 405/K/CCe	1.1	3.2	79.0	82.0	82.5

Motor efficiency based on 400 V, 50 Hz

Technical data Wilo-Comfort COR Helix VE.../CCe

Dimension drawing

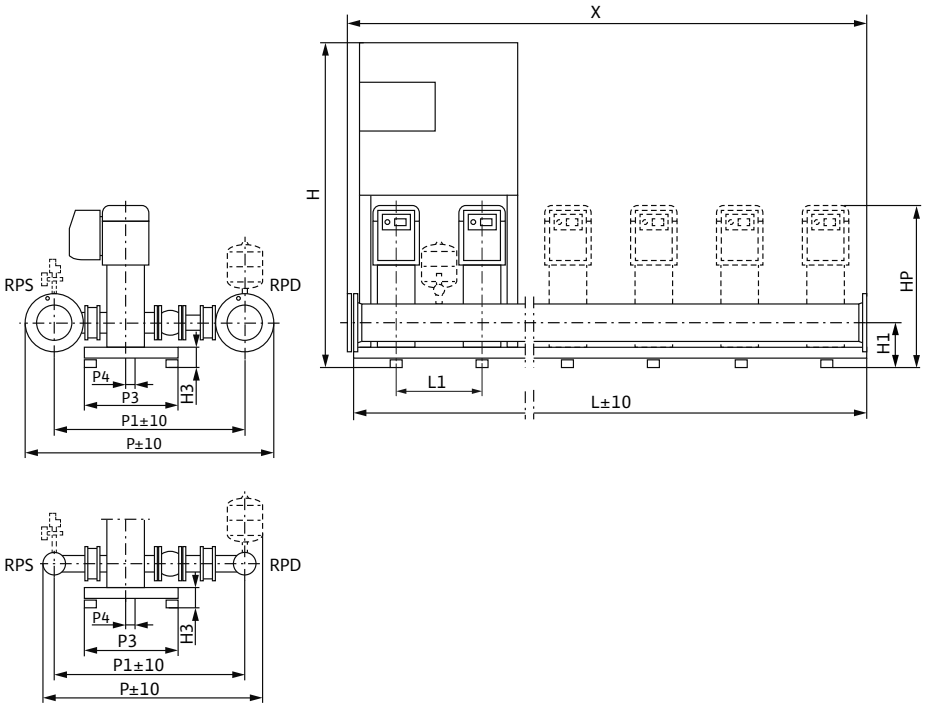

Sample systems are shown. Switchbox position depends on pump height.
Accessories (to be ordered separately): Optional WMS low-water cut-out switchgear kit
Installation surface: flat and horizontal
Installation location: dry, well ventilated and frost-proof

Dimensions, weights

Wilo-Comfort COR 2-6...	Nominal diameters of the pipe connections on suction side	Nominal diameters of pipe connections on the pressure side	Dimensions											Weight approx.
	RPS	*RPD*	*H*	*H1*	*H3*	*HP*	*L*	*L1*	*P*	*P1*	*P3*	*P4*	*X*	*m*
			mm											kg
COR-2 Helix VE 405/K/CCe	R 1½	Rp 1½	1670	140	90	776	600	300	737	610	300	20	600	125
COR-3 Helix VE 405/K/CCe	R 2	R 2	1670	140	90	776	900	300	756	623	300	20	900	169
COR-4 Helix VE 405/K/CCe	R 2½	R 2½	1670	140	90	776	1200	300	780	639	300	20	1200	222
COR-5 Helix VE 405/K/CCe	R 2½	R 2½	1670	140	90	776	1500	300	780	639	300	20	1500	280
COR-6 Helix VE 405/K/CCe	R 2½	R 2½	1670	140	90	776	1800	300	780	639	300	20	1800	325

Technical data Wilo-Comfort COR Helix VE.../CCe

Pump curves

Wilo-Comfort COR 2-6 Helix VE 407/CCe

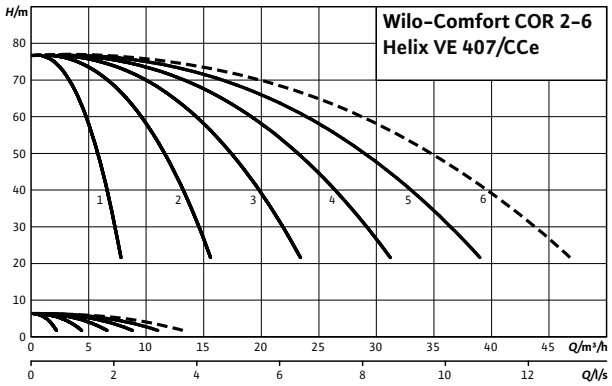

---- including standby pump

Motor data for each pump

Wilo-Comfort COR-...	Nominal motor power	Nominal current 3~400 V, 50 Hz	Motor efficiency		
	P_2	I_N	$\eta_{m\ 50\%}$	$\eta_{m\ 75\%}$	$\eta_{m\ 100\%}$
	kW	A	%		
Helix VE 407/K/CCe	1.5	5.6	79.0	82.0	84.0

Motor efficiency based on 400 V, 50 Hz

Technical data Wilo-Comfort COR Helix VE.../CCe

Dimension drawing

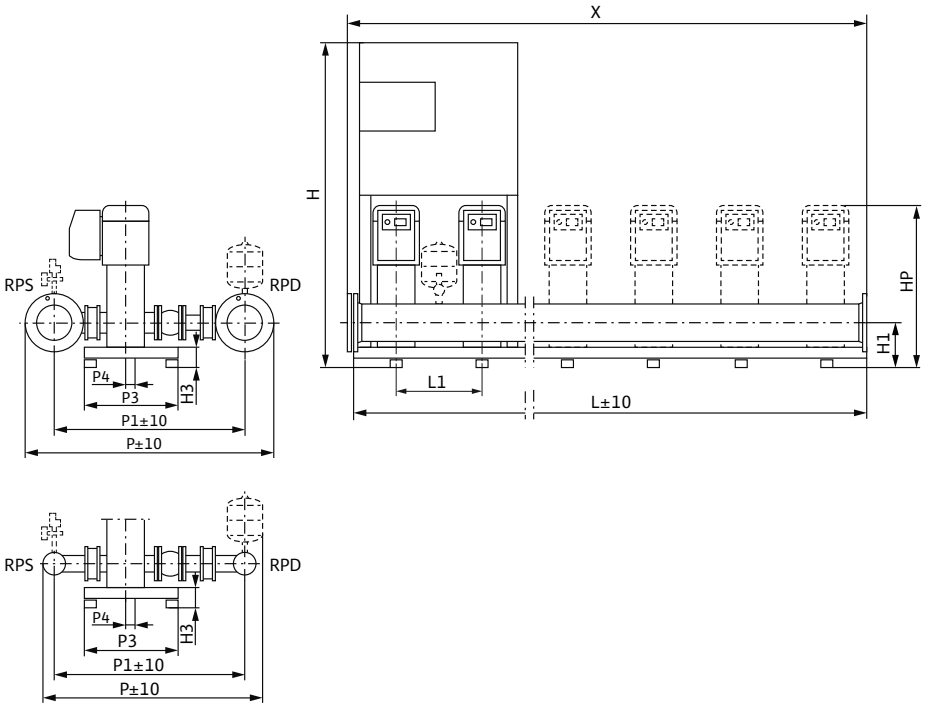

Sample systems are shown. Switchbox position depends on pump height.
Accessories (to be ordered separately): Optional WMS low-water cut-out switchgear kit
Installation surface: flat and horizontal
Installation location: dry, well ventilated and frost-proof

Dimensions, weights

Wilo-Comfort COR-...	Nominal diameters of the pipe connections on suction side	Nominal diameters of pipe connections on the pressure side	Dimensions											Weight approx.
	RPS	*RPD*	*H*	*H1*	*H3*	*HP*	*L*	*L1*	*P*	*P1*	*P3*	*P4*	*X*	*m*
			mm											kg
COR-2 Helix VE 407/K/CCe	R 1½	Rp 1½	1670	140	90	875	600	300	737	610	300	20	600	144
COR-3 Helix VE 407/K/CCe	R 2	R 2	1670	140	90	875	900	300	756	623	300	20	900	198
COR-4 Helix VE 407/K/CCe	R 2½	R 2½	1670	140	90	875	1200	300	780	639	300	20	1200	260
COR-5 Helix VE 407/K/CCe	R 2½	R 2½	1670	140	90	875	1500	300	780	639	300	20	1500	328
COR-6 Helix VE 407/K/CCe	R 2½	R 2½	1670	140	90	875	1800	300	780	639	300	20	1800	382

Technical data Wilo-Comfort COR Helix VE.../CCe

Pump curves

Wilo-Comfort COR 2-6 Helix VE 410/CCe

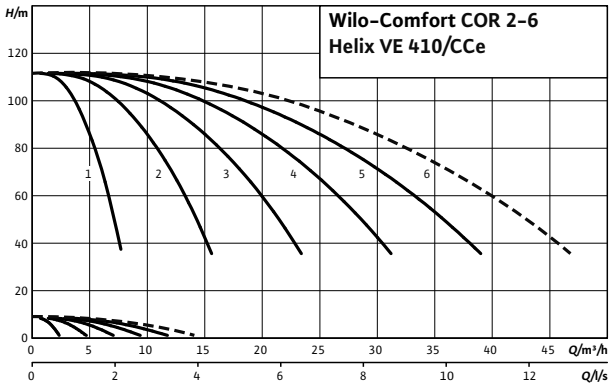

---- including standby pump

Motor data per pump					
Wilo-Comfort COR 2-6...	**Nominal motor power**	**Nominal current 3~400 V, 50 Hz**	**Motor efficiency**		
	P_2	I_N	$\eta_{m\ 50\%}$	$\eta_{m\ 75\%}$	$\eta_{m\ 100\%}$
	kW	A	%		
Helix VE 410/K/CCe	2.2	5.6	81.0	84.0	85.5

Motor efficiency based on 400 V, 50 Hz

Technical data Wilo-Comfort COR Helix VE.../CCe

Dimension drawing

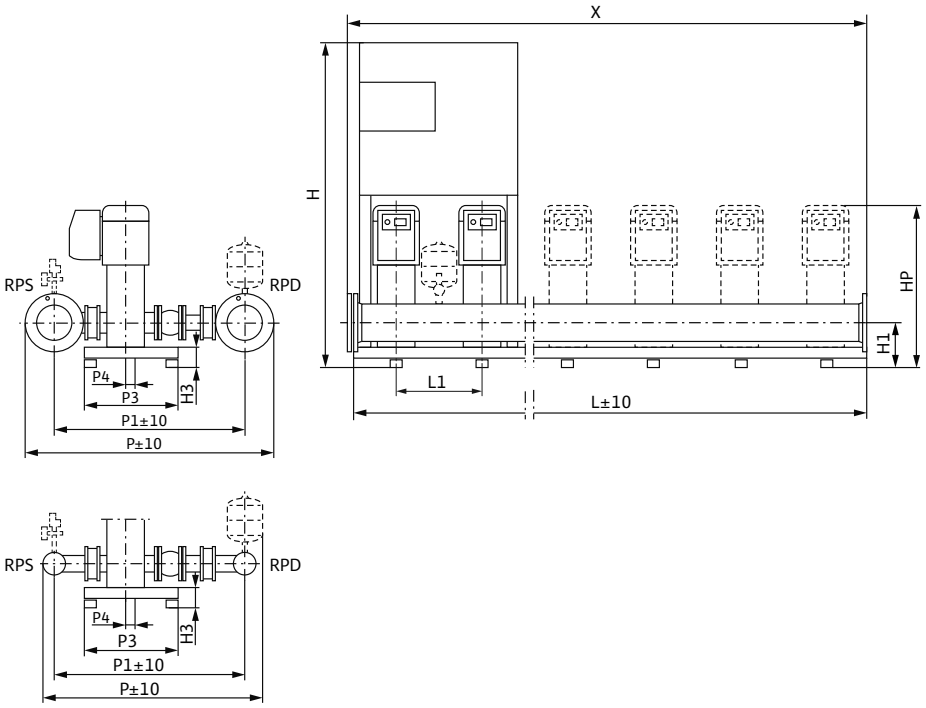

Sample systems are shown. Switchbox position depends on pump height.
Accessories (to be ordered separately): Optional WMS low-water cut-out switchgear kit
Installation surface: flat and horizontal
Installation location: dry, well ventilated and frost-proof

Dimensions, weights

Wilo-Comfort COR 2-6...	Nominal diameters of the pipe connections on suction side	Nominal diameters of pipe connections on the pressure side	Dimensions											Weight approx.
	RPS	*RPD*	*H*	*H1*	*H3*	*HP*	*L*	*L1*	*P*	*P1*	*P3*	*P4*	*X*	*m*
			mm											kg
COR-2 Helix VE 410/K/CCe	R 1½	Rp 1½	1670	140	90	955	600	300	737	610	300	20	600	148
COR-3 Helix VE 410/K/CCe	R 2	R 2	1670	140	90	955	900	300	756	623	300	20	900	204
COR-4 Helix VE 410/K/CCe	R 2½	R 2½	1670	140	90	955	1200	300	780	639	300	20	1200	268
COR-5 Helix VE 410/K/CCe	R 2½	R 2½	1870	140	90	955	1500	300	780	639	300	20	1500	338
COR-6 Helix VE 410/K/CCe	R 2½	R 2½	1870	140	90	955	1800	300	780	639	300	20	1800	394

Technical data Wilo-Comfort COR Helix VE.../CCe

Pump curves

Wilo-Comfort COR 2-6 Helix VE 602/CCe

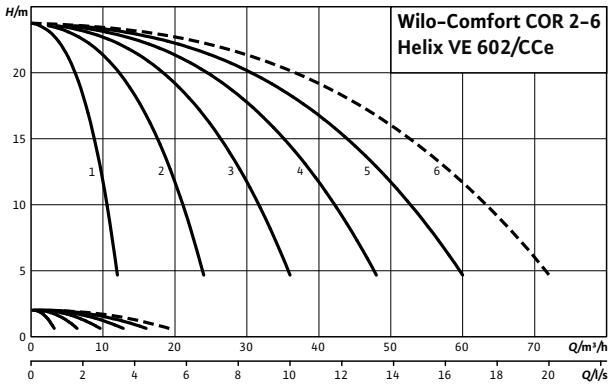

---- including standby pump

Motor data for each pump					
Wilo-Comfort COR-...	**Nominal motor power**	**Nominal current 3~400 V, 50 Hz**	**Motor efficiency**		
	P_2	I_N	$\eta_{m\ 50\%}$	$\eta_{m\ 75\%}$	$\eta_{m\ 100\%}$
	kW	A	%		
Helix VE 602/K/CCe	0.75	3.2	74.0	78.0	79.0

Motor efficiency based on 400 V, 50 Hz

Technical data Wilo-Comfort COR Helix VE.../CCe

Dimension drawing

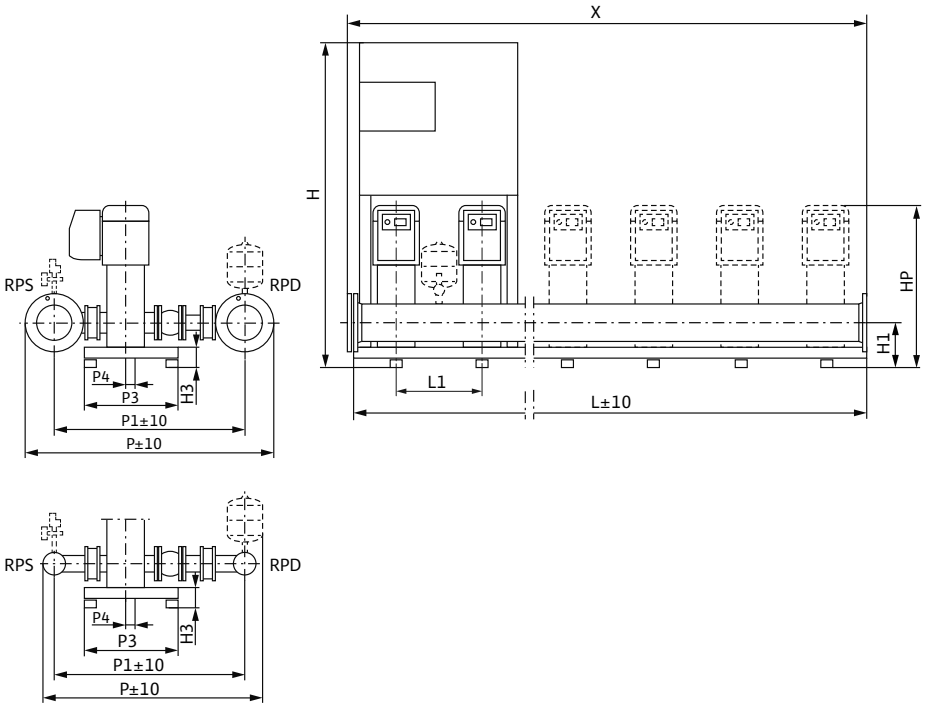

Sample systems are shown. Switchbox position depends on pump height.
Accessories (to be ordered separately): Optional WMS low-water cut-out switchgear kit
Installation surface: flat and horizontal
Installation location: dry, well ventilated and frost-proof

Dimensions, weights

Wilo-Comfort COR-...	Nominal diameters of the pipe connections on suction side	Nominal diameters of pipe connections on the pressure side	Dimensions											Weight approx.
	RPS	*RPD*	*H*	*H1*	*H3*	*HP*	*L*	*L1*	*P*	*P1*	*P3*	*P4*	*X*	*m*
			mm											kg
COR-2 Helix VE 602/K/CCe	R 2	R 2	1670	140	90	730	600	300	756	623	300	20	600	125
COR-3 Helix VE 602/K/CCe	R 2½	R 2½	1670	140	90	730	900	300	780	639	300	20	900	169
COR-4 Helix VE 602/K/CCe	R 2½	R 2½	1670	140	90	730	1200	300	780	639	300	20	1200	222
COR-5 Helix VE 602/K/CCe	R 3	R 3	1670	140	90	730	1500	300	798	650	300	20	1500	281
COR-6 Helix VE 602/K/CCe	R 3	R 3	1670	140	90	730	1800	300	798	650	300	20	1800	326

Technical data Wilo-Comfort COR Helix VE.../CCe

Pump curves

Wilo-Comfort COR 2-6 Helix VE 603/CCe

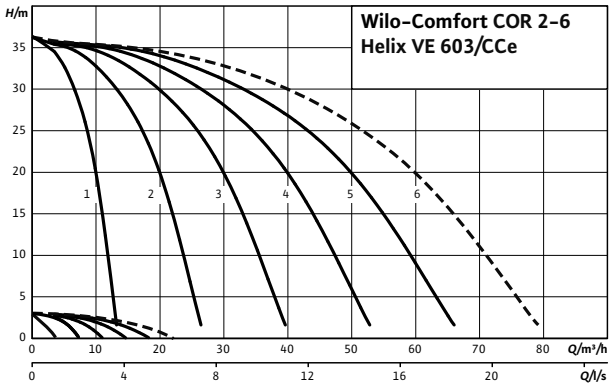

---- including standby pump

Motor data per pump					
Wilo-Comfort COR 2-6...	**Nominal motor power**	**Nominal current 3~400 V, 50 Hz**	**Motor efficiency**		
	P_2	I_N	$\eta_{m\ 50\%}$	$\eta_{m\ 75\%}$	$\eta_{m\ 100\%}$
	kW	A	%		
Helix VE 603/K/CCe	1.1	3.2	79.0	82.0	82.5

Motor efficiency based on 400 V, 50 Hz

Technical data Wilo-Comfort COR Helix VE.../CCe

Dimension drawing

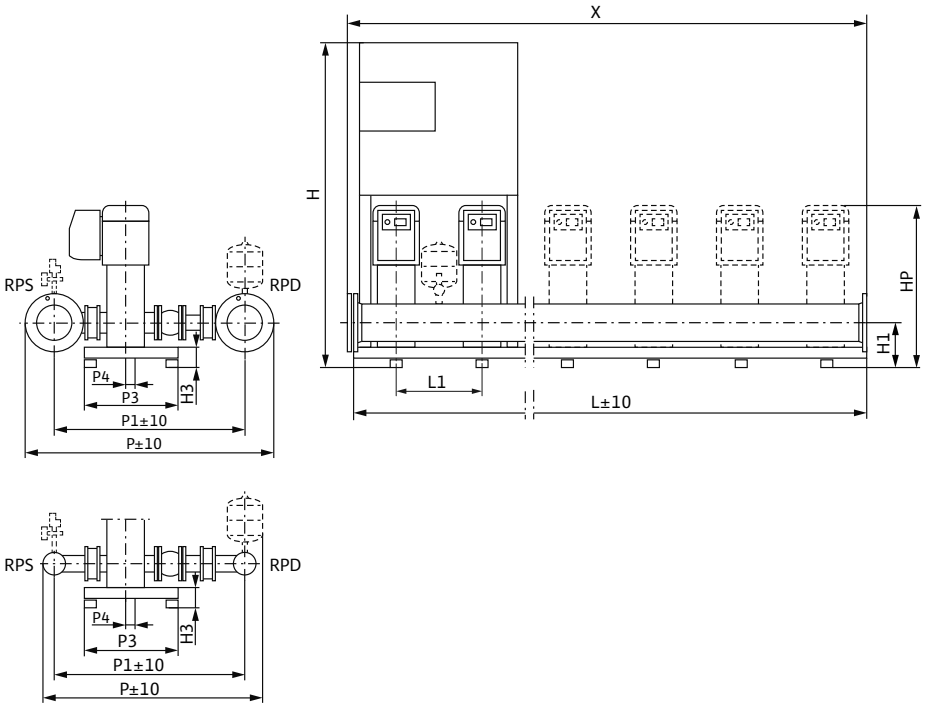

Sample systems are shown. Switchbox position depends on pump height.
Accessories (to be ordered separately): Optional WMS low-water cut-out switchgear kit
Installation surface: flat and horizontal
Installation location: dry, well ventilated and frost-proof

Dimensions, weights

Wilo-Comfort COR 2-6...	Nominal diameters of the pipe connections on suction side	Nominal diameters of pipe connections on the pressure side	Dimensions											Weight approx.
	RPS	*RPD*	*H*	*H1*	*H3*	*HP*	*L*	*L1*	*P*	*P1*	*P3*	*P4*	*X*	*m*
			mm											kg
COR-2 Helix VE 603/K/CCe	R 2	R 2	1670	140	90	764	600	300	756	623	300	20	600	127
COR-3 Helix VE 603/K/CCe	R 2½	R 2½	1670	140	90	764	900	300	780	639	300	20	900	172
COR-4 Helix VE 603/K/CCe	R 2½	R 2½	1670	140	90	764	1200	300	780	639	300	20	1200	226
COR-5 Helix VE 603/K/CCe	R 3	R 3	1670	140	90	764	1500	300	798	650	300	20	1500	286
COR-6 Helix VE 603/K/CCe	R 3	R 3	1670	140	90	764	1800	300	798	650	300	20	1800	332

Technical data Wilo-Comfort COR Helix VE.../CCe

Pump curves

Wilo-Comfort COR 2-6 Helix VE 604/CCe

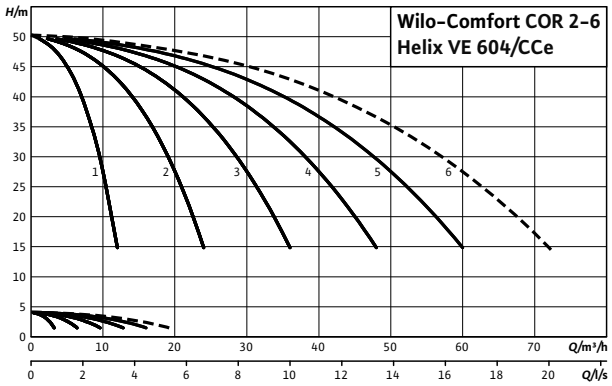

---- including standby pump

Motor data for each pump					
Wilo-Comfort COR-...	**Nominal motor power**	**Nominal current 3~400 V, 50 Hz**	**Motor efficiency**		
	P_2	I_N	$\eta_{m\ 50\%}$	$\eta_{m\ 75\%}$	$\eta_{m\ 100\%}$
	kW	A	%		
Helix VE 604/K/CCe	1.5	5.6	79.0	82.0	84.0

Motor efficiency based on 400 V, 50 Hz

Technical data Wilo-Comfort COR Helix VE.../CCe

Dimension drawing

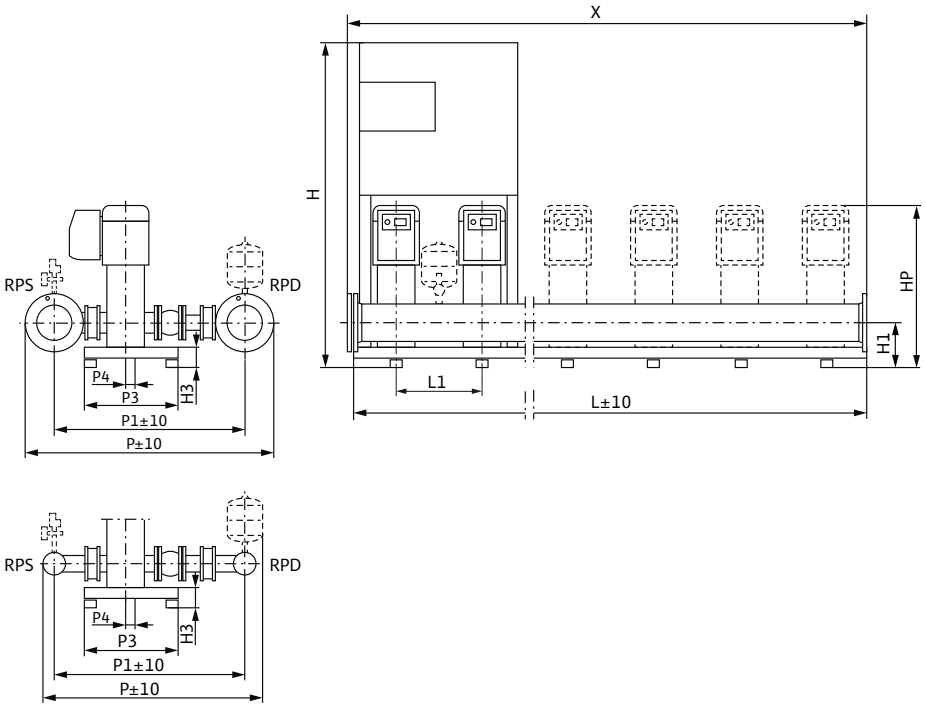

Sample systems are shown. Switchbox position depends on pump height.
Accessories (to be ordered separately): Optional WMS low-water cut-out switchgear kit
Installation surface: flat and horizontal
Installation location: dry, well ventilated and frost-proof

Dimensions, weights

Wilo-Comfort COR-...	Nominal diameters of the pipe connections on suction side	Nominal diameters of pipe connections on the pressure side	Dimensions											Weight approx.
	RPS	*RPD*	*H*	*H1*	*H3*	*HP*	*L*	*L1*	*P*	*P1*	*P3*	*P4*	*X*	*m*
			mm											kg
COR-2 Helix VE 604/K/CCe	R 2	R 2	1670	140	90	840	600	300	756	623	300	20	600	147
COR-3 Helix VE 604/K/CCe	R 2½	R 2½	1670	140	90	840	900	300	780	639	300	20	900	202
COR-4 Helix VE 604/K/CCe	R 2½	R 2½	1670	140	90	840	1200	300	780	639	300	20	1200	266
COR-5 Helix VE 604/K/CCe	R 3	R 3	1670	140	90	840	1500	300	798	650	300	20	1500	336
COR-6 Helix VE 604/K/CCe	R 3	R 3	1670	140	90	840	1800	300	798	650	300	20	1800	392

Technical data Wilo-Comfort COR Helix VE.../CCe

Pump curves

Wilo-Comfort COR 2-6 Helix VE 606/CCe

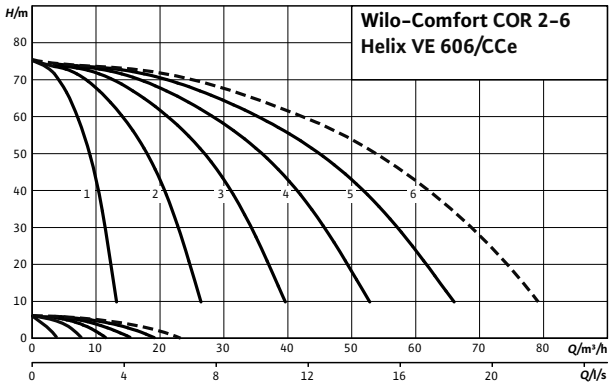

---- including standby pump

Motor data per pump					
Wilo-Comfort COR 2-6...	**Nominal motor power**	**Nominal current 3~400 V, 50 Hz**	**Motor efficiency**		
	P_2	I_N	$\eta_{m\ 50\%}$	$\eta_{m\ 75\%}$	$\eta_{m\ 100\%}$
	kW	A	%		
Helix VE 606/K/CCe	2.2	5.6	81.0	84.0	85.5

Motor efficiency based on 400 V, 50 Hz

Technical data Wilo-Comfort COR Helix VE.../CCe

Dimension drawing

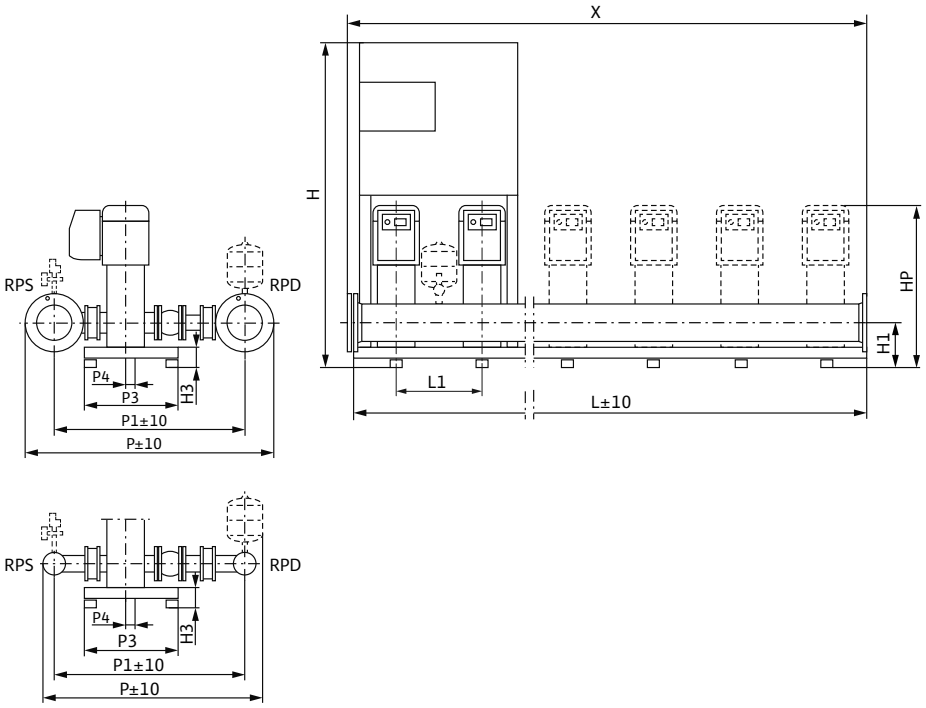

Sample systems are shown. Switchbox position depends on pump height.
Accessories (to be ordered separately): Optional WMS low-water cut-out switchgear kit
Installation surface: flat and horizontal
Installation location: dry, well ventilated and frost-proof

Dimensions, weights

Wilo-Comfort COR 2-6...	Nominal diameters of the pipe connections on suction side	Nominal diameters of pipe connections on the pressure side	Dimensions											Weight approx.
	RPS	*RPD*	*H*	*H1*	*H3*	*HP*	*L*	*L1*	*P*	*P1*	*P3*	*P4*	*X*	*m*
			mm											kg
COR-2 Helix VE 606/K/CCe	R 2	R 2	1670	140	90	930	600	300	756	623	300	20	600	151
COR-3 Helix VE 606/K/CCe	R 2½	R 2½	1670	140	90	930	900	300	780	639	300	20	900	208
COR-4 Helix VE 606/K/CCe	R 2½	R 2½	1670	140	90	930	1200	300	780	639	300	20	1200	274
COR-5 Helix VE 606/K/CCe	R 3	R 3	1670	140	90	930	1500	300	798	650	300	20	1500	246
COR-6 Helix VE 606/K/CCe	R 3	R 3	1670	140	90	930	1800	300	798	650	300	20	1800	404

Technical data Wilo-Comfort COR Helix VE.../CCe

Pump curves

Wilo-Comfort COR 2-6 Helix VE 608/CCe

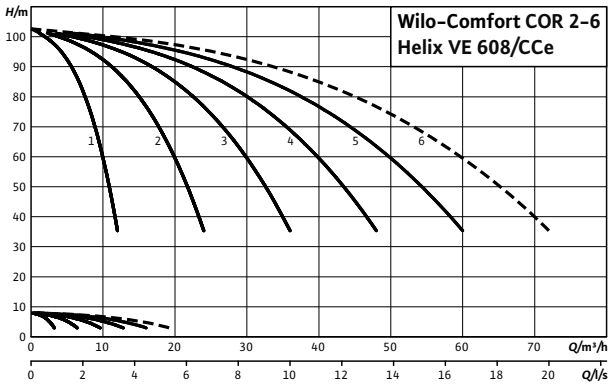

---- including standby pump

Motor data for each pump					
Wilo-Comfort COR-...	**Nominal motor power**	**Nominal current 3~400 V, 50 Hz**	**Motor efficiency**		
	P_2	I_N	$\eta_{m\ 50\%}$	$\eta_{m\ 75\%}$	$\eta_{m\ 100\%}$
	kW	A	%		
Helix VE 608/K/CCe	3	9	84.2	87.5	87.5

Motor efficiency based on 400 V, 50 Hz

Technical data Wilo-Comfort COR Helix VE.../CCe

Dimension drawing

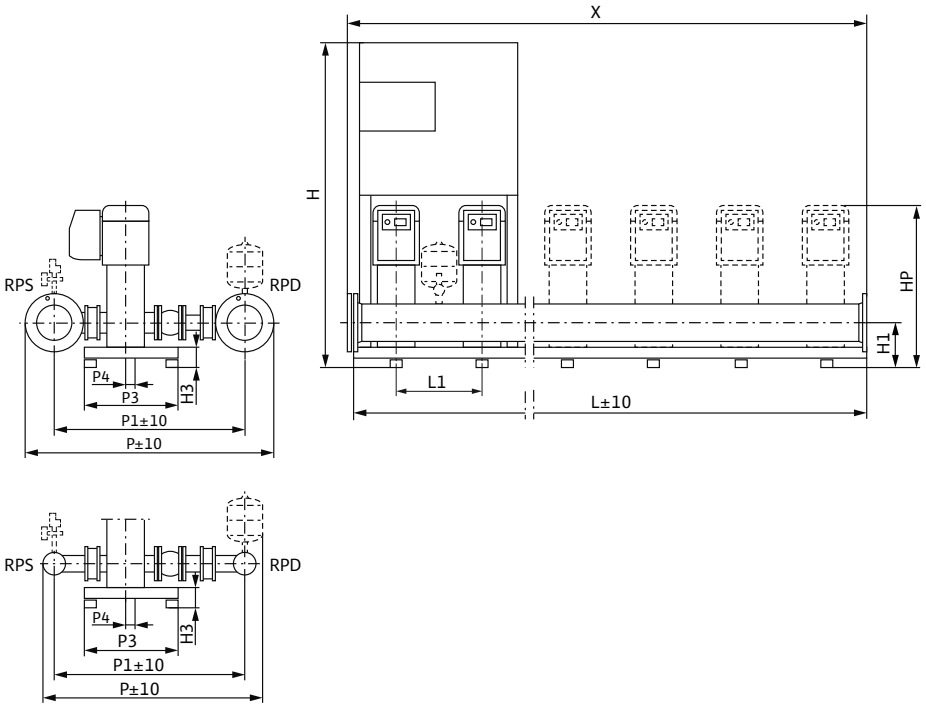

Sample systems are shown. Switchbox position depends on pump height.
Accessories (to be ordered separately): Optional WMS low-water cut-out switchgear kit
Installation surface: flat and horizontal
Installation location: dry, well ventilated and frost-proof

Dimensions, weights

Wilo-Comfort COR-...	Nominal diameters of the pipe connections on suction side	Nominal diameters of pipe connections on the pressure side	Dimensions											Weight approx.
	RPS	*RPD*	*H*	*H1*	*H3*	*HP*	*L*	*L1*	*P*	*P1*	*P3*	*P4*	*X*	*m*
			mm											kg
COR-2 Helix VE 608/K/CCe	R 2	R 2	1670	140	90	1038	600	300	756	623	300	20	600	197
COR-3 Helix VE 608/K/CCe	R 2½	R 2½	1670	140	90	1038	900	300	780	639	300	20	900	277
COR-4 Helix VE 608/K/CCe	R 2½	R 2½	1670	140	90	1038	1200	300	780	639	300	20	1200	366
COR-5 Helix VE 608/K/CCe	R 3	R 3	1870	140	90	1038	1500	300	798	650	300	20	1500	461
COR-6 Helix VE 608/K/CCe	R 3	R 3	1870	140	90	1038	1800	300	798	650	300	20	1800	542

Technical data Wilo-Comfort COR Helix VE.../CCe

Pump curves

Wilo-Comfort COR 2-6 Helix VE 611/CCe

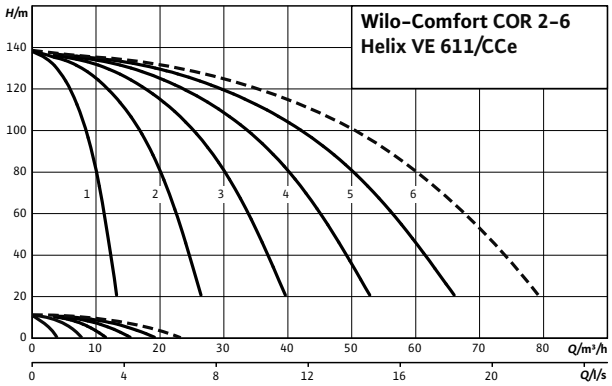

---- including standby pump

Motor data per pump					
Wilo-Comfort COR 2-6...	**Nominal motor power**	**Nominal current 3~400 V, 50 Hz**	**Motor efficiency**		
	P_2	I_N	$\eta_{m\ 50\%}$	$\eta_{m\ 75\%}$	$\eta_{m\ 100\%}$
	kW	A	%		
Helix VE 611/K/CCe	4	9.7	84.5	87.1	87.5

Motor efficiency based on 400 V, 50 Hz

Technical data Wilo-Comfort COR Helix VE.../CCe

Dimension drawing

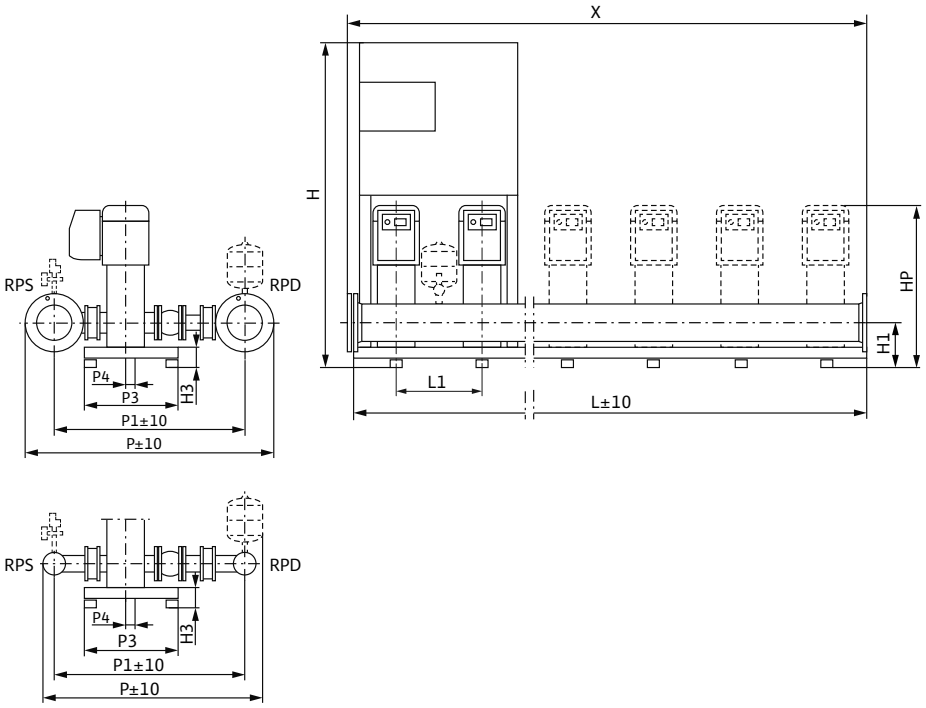

Sample systems are shown. Switchbox position depends on pump height.
Accessories (to be ordered separately): Optional WMS low-water cut-out switchgear kit
Installation surface: flat and horizontal
Installation location: dry, well ventilated and frost-proof

Dimensions, weights

Wilo-Comfort COR 2-6...	Nominal diameters of the pipe connections on suction side	Nominal diameters of pipe connections on the pressure side	Dimensions											Weight approx.
	RPS	*RPD*	*H*	*H1*	*H3*	*HP*	*L*	*L1*	*P*	*P1*	*P3*	*P4*	*X*	*m*
			mm											kg
COR-2 Helix VE 611/K/CCe	R 2	R 2	1670	140	90	1215	1200	300	756	623	450	25	600	218
COR-3 Helix VE 611/K/CCe	R 2½	R 2½	1670	140	90	1215	1500	300	780	639	470	25	900	310
COR-4 Helix VE 611/K/CCe	R 2½	R 2½	1670	140	90	1215	1800	300	780	639	470	25	1200	406
COR-5 Helix VE 611/K/CCe	R 3	R 3	1670	140	90	1215	2300	300	798	650	470	25	1500	507
COR-6 Helix VE 611/K/CCe	R 3	R 3	1670	140	90	1215	2600	300	798	650	470	25	1800	594

Technical data Wilo-Comfort COR Helix VE.../CCe

Pump curves

Wilo-Comfort COR 2-6 Helix VE 1002/CCe

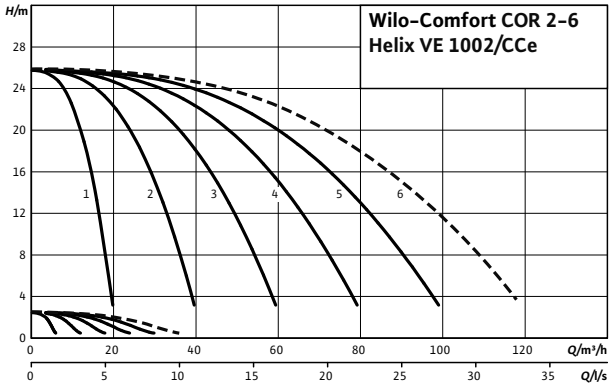

---- including standby pump

Motor data per pump					
Wilo-Comfort COR 2-6...	**Nominal motor power**	**Nominal current 3~400 V, 50 Hz**	**Motor efficiency**		
	P_2	I_N	$\eta_{m\ 50\%}$	$\eta_{m\ 75\%}$	$\eta_{m\ 100\%}$
	kW	A	%		
Helix VE 1002/K/CCe	1.1	3.2	79.0	82.0	82.5

Motor efficiency based on 400 V, 50 Hz

Technical data Wilo-Comfort COR Helix VE.../CCe

Dimension drawing

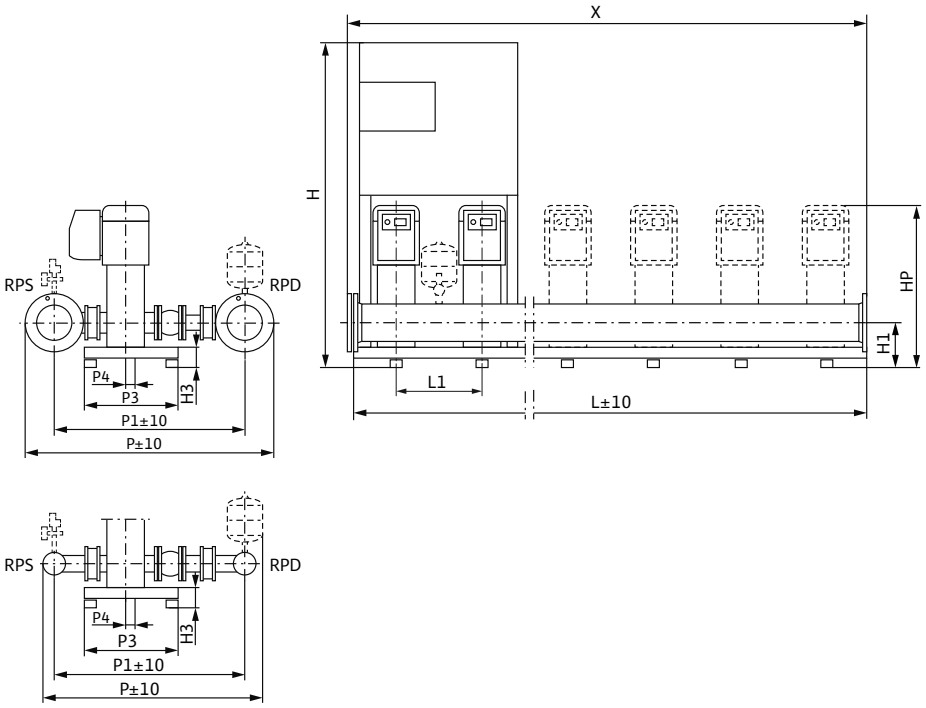

Sample systems are shown. Switchbox position depends on pump height.
Accessories (to be ordered separately): Optional WMS low-water cut-out switchgear kit
Installation surface: flat and horizontal
Installation location: dry, well ventilated and frost-proof

Dimensions, weights

Wilo-Comfort COR 2-6...	Nominal diameters of the pipe connections on suction side	Nominal diameters of pipe connections on the pressure side	Dimensions											Weight approx.
	RPS	*RPD*	*H*	*H1*	*H3*	*HP*	*L*	*L1*	*P*	*P1*	*P3*	*P4*	*X*	*m*
			mm											kg
COR-2 Helix VE 1002/K/CCe	R 2½	R 2½	1685	195	105	762	600	300	895	754	450	25	600	149
COR-3 Helix VE 1002/K/CCe	R 3	R 3	1685	195	105	762	900	300	915	767	450	25	900	206
COR-4 Helix VE 1002/K/CCe	R 3	R 3	1685	195	105	762	1200	300	915	767	450	25	1200	249
COR-5 Helix VE 1002/K/CCe	DN 100	DN 100	1685	195	105	762	1500	300	1012	792	470	25	1500	354
COR-6 Helix VE 1002/K/CCe	DN 100	DN 100	1685	195	105	762	1800	300	1012	792	470	25	1800	409

Technical data Wilo-Comfort COR Helix VE.../CCe

Pump curves

Wilo-Comfort COR 2-6 Helix VE 1003/CCe

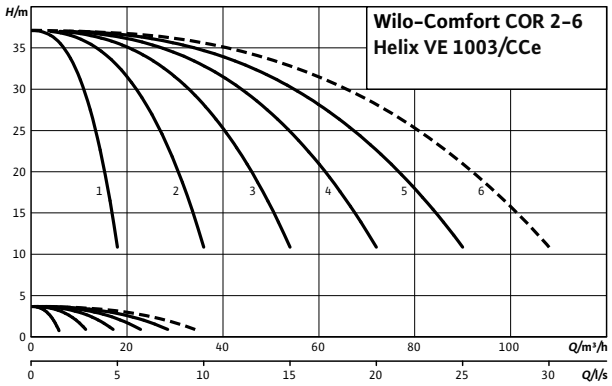

---- including standby pump

Motor data for each pump					
Wilo-Comfort COR-...	**Nominal motor power**	**Nominal current 3~400 V, 50 Hz**	**Motor efficiency**		
	P_2	I_N	$\eta_{m\ 50\%}$	$\eta_{m\ 75\%}$	$\eta_{m\ 100\%}$
	kW	A	%		
Helix VE 1003/K/CCe	1.5	5.6	79.0	82.0	84.0

Motor efficiency based on 400 V, 50 Hz

Technical data Wilo-Comfort COR Helix VE.../CCe

Dimension drawing

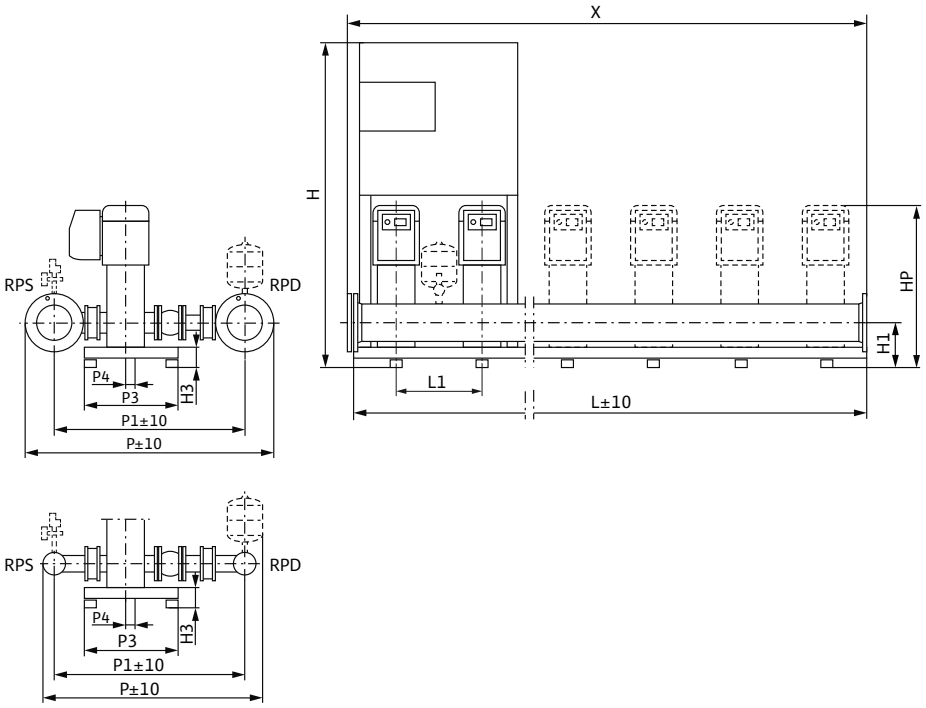

Sample systems are shown. Switchbox position depends on pump height.
Accessories (to be ordered separately): Optional WMS low-water cut-out switchgear kit
Installation surface: flat and horizontal
Installation location: dry, well ventilated and frost-proof

Dimensions, weights

Wilo-Comfort COR-...	Nominal diameters of the pipe connections on suction side	Nominal diameters of pipe connections on the pressure side	Dimensions											Weight approx.
	RPS	*RPD*	*H*	*H1*	*H3*	*HP*	*L*	*L1*	*P*	*P1*	*P3*	*P4*	*X*	*m*
			mm											kg
COR-2 Helix VE 1003/K/CCe	R 2½	R 2½	1685	195	105	849	600	300	895	754	450	25	600	167
COR-3 Helix VE 1003/K/CCe	R 3	R 3	1685	195	105	849	900	300	915	767	450	25	900	233
COR-4 Helix VE 1003/K/CCe	R 3	R 3	1685	195	105	849	1200	300	915	767	450	25	1200	285
COR-5 Helix VE 1003/K/CCe	DN 100	DN 100	1685	195	105	849	1500	300	1012	792	470	25	1500	399
COR-6 Helix VE 1003/K/CCe	DN 100	DN 100	1685	195	105	849	1800	300	1012	792	470	25	1800	463

Technical data Wilo-Comfort COR Helix VE.../CCe

Pump curves

Wilo-Comfort COR 2-6 Helix VE 1004/CCe

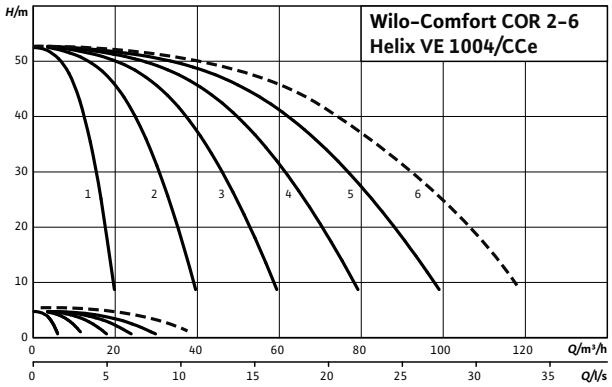

---- including standby pump

Motor data per pump					
Wilo-Comfort COR 2-6...	**Nominal motor power**	**Nominal current 3~400 V, 50 Hz**	**Motor efficiency**		
	P_2	I_N	$\eta_{m\ 50\%}$	$\eta_{m\ 75\%}$	$\eta_{m\ 100\%}$
	kW	A	%		
Helix VE 1004/K/CCe	2.2	5.6	81.0	84.0	85.5

Motor efficiency based on 400 V, 50 Hz

Technical data Wilo-Comfort COR Helix VE.../CCe

Dimension drawing

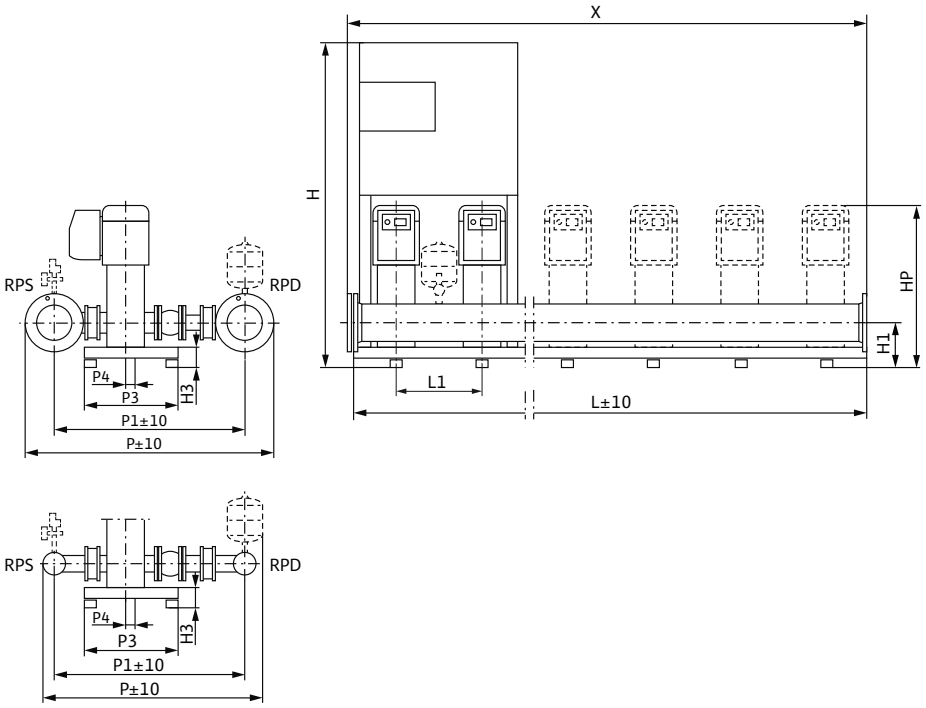

Sample systems are shown. Switchbox position depends on pump height.
Accessories (to be ordered separately): Optional WMS low-water cut-out switchgear kit
Installation surface: flat and horizontal
Installation location: dry, well ventilated and frost-proof

Dimensions, weights

Wilo-Comfort COR 2-6...	Nominal diameters of the pipe connections on suction side	Nominal diameters of pipe connections on the pressure side	Dimensions											Weight approx.
	RPS	*RPD*	*H*	*H1*	*H3*	*HP*	*L*	*L1*	*P*	*P1*	*P3*	*P4*	*X*	*m*
			mm											kg
COR-2 Helix VE 1004/K/CCe	R 2½	R 2½	1685	195	105	891	600	300	895	754	450	25	600	169
COR-3 Helix VE 1004/K/CCe	R 3	R 3	1685	195	105	891	900	300	915	767	450	25	900	236
COR-4 Helix VE 1004/K/CCe	R 3	R 3	1685	195	105	891	1200	300	915	767	450	25	1200	289
COR-5 Helix VE 1004/K/CCe	DN 100	DN 100	1685	195	105	891	1500	300	1012	792	470	25	1500	404
COR-6 Helix VE 1004/K/CCe	DN 100	DN 100	1685	195	105	891	1800	300	1012	792	470	25	1800	469

Technical data Wilo-Comfort COR Helix VE.../CCe

Pump curves

Wilo-Comfort COR 2-6 Helix VE 1005/CCe

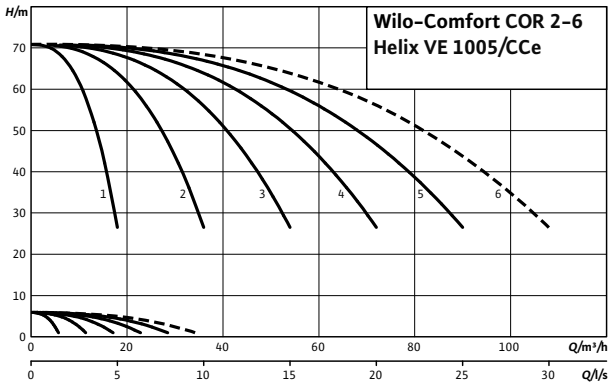

---- including standby pump

Motor data for each pump					
Wilo-Comfort COR-...	**Nominal motor power**	**Nominal current 3~400 V, 50 Hz**	**Motor efficiency**		
	P_2	I_N	$\eta_{m\ 50\%}$	$\eta_{m\ 75\%}$	$\eta_{m\ 100\%}$
	kW	A	%		
Helix VE 1005/K/CCe	3	9	84.2	87.5	87.5

Motor efficiency based on 400 V, 50 Hz

Technical data Wilo-Comfort COR Helix VE.../CCe

Dimension drawing

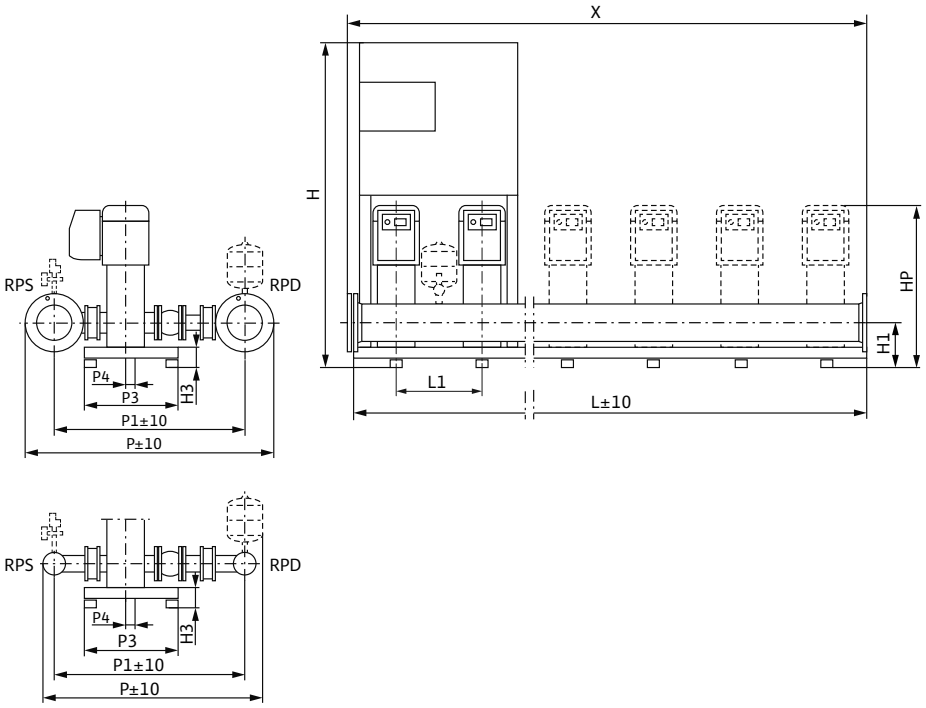

Sample systems are shown. Switchbox position depends on pump height.
Accessories (to be ordered separately): Optional WMS low-water cut-out switchgear kit
Installation surface: flat and horizontal
Installation location: dry, well ventilated and frost-proof

Dimensions, weights

Wilo-Comfort COR-...	Nominal diameters of the pipe connections on suction side	Nominal diameters of pipe connections on the pressure side	Dimensions											Weight approx.
	RPS	*RPD*	*H*	*H1*	*H3*	*HP*	*L*	*L1*	*P*	*P1*	*P3*	*P4*	*X*	*m*
			mm											kg
COR-2 Helix VE 1005/K/CCe	R 2½	R 2½	1685	195	105	942	600	300	895	754	450	25	600	213
COR-3 Helix VE 1005/K/CCe	R 3	R 3	1685	195	105	942	900	300	915	767	450	25	900	302
COR-4 Helix VE 1005/K/CCe	R 3	R 3	1685	195	105	942	1200	300	915	767	450	25	1200	377
COR-5 Helix VE 1005/K/CCe	DN 100	DN 100	1685	195	105	942	1500	300	1012	792	470	25	1500	514
COR-6 Helix VE 1005/K/CCe	DN 100	DN 100	1685	195	105	942	1800	300	1012	792	470	25	1800	601

Technical data Wilo-Comfort COR Helix VE.../CCe

Pump curves

Wilo-Comfort COR 2-6 Helix VE 1006/CCe

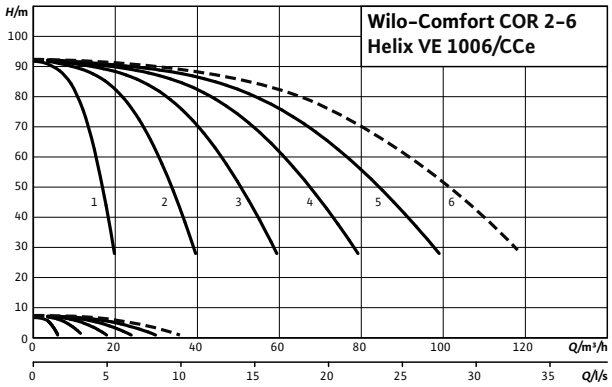

---- including standby pump

Motor data per pump					
Wilo-Comfort COR 2-6...	**Nominal motor power**	**Nominal current 3~400 V, 50 Hz**	**Motor efficiency**		
	P_2	I_N	$\eta_{m\ 50\%}$	$\eta_{m\ 75\%}$	$\eta_{m\ 100\%}$
	kW	A	%		
Helix VE 1006/K/CCe	4	9.7	84.5	87.1	87.5

Motor efficiency based on 400 V, 50 Hz

Technical data Wilo-Comfort COR Helix VE.../CCe

Dimension drawing

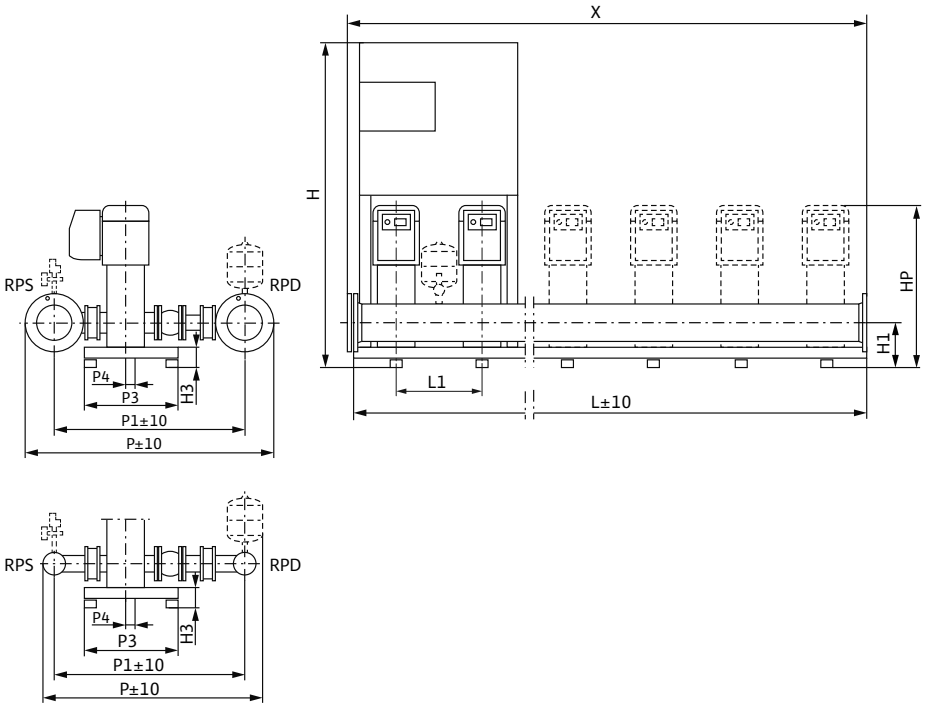

Sample systems are shown. Switchbox position depends on pump height.
Accessories (to be ordered separately): Optional WMS low-water cut-out switchgear kit
Installation surface: flat and horizontal
Installation location: dry, well ventilated and frost-proof

Dimensions, weights

Wilo-Comfort COR 2-6...	Nominal diameters of the pipe connections on suction side	Nominal diameters of pipe connections on the pressure side	Dimensions											Weight approx.
	RPS	*RPD*	*H*	*H1*	*H3*	*HP*	*L*	*L1*	*P*	*P1*	*P3*	*P4*	*X*	*m*
			mm											kg
COR-2 Helix VE 1006/K/CCe	R 2½	R 2½	1685	195	105	1026	600	300	895	754	450	25	600	215
COR-3 Helix VE 1006/K/CCe	R 3	R 3	1685	195	105	1026	900	300	915	767	450	25	900	305
COR-4 Helix VE 1006/K/CCe	R 3	R 3	1685	195	105	1026	1200	300	915	767	450	25	1200	381
COR-5 Helix VE 1006/K/CCe	DN 100	DN 100	1885	195	105	1026	1500	300	1012	792	470	25	1500	520
COR-6 Helix VE 1006/K/CCe	DN 100	DN 100	1885	195	105	1026	1800	300	1012	792	470	25	1800	609

Technical data Wilo-Comfort COR Helix VE.../CCe

Pump curves

Wilo-Comfort COR 2-6 Helix VE 1009/CCe

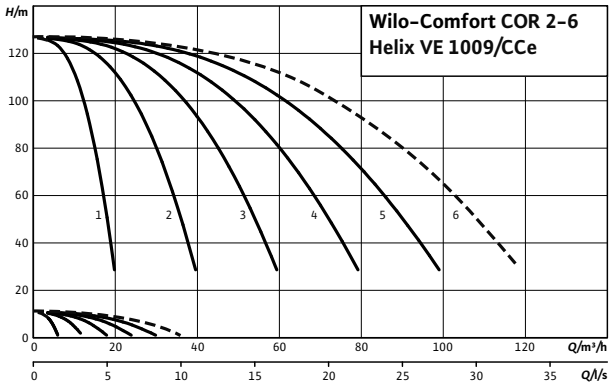

---- including standby pump

Motor data per pump					
Wilo-Comfort COR 2-6...	**Nominal motor power**	**Nominal current 3~400 V, 50 Hz**	**Motor efficiency**		
	P_2	I_N	$\eta_{m\ 50\%}$	$\eta_{m\ 75\%}$	$\eta_{m\ 100\%}$
	kW	A	%		
Helix VE 1009/K/CCe	5.5	11	87.4	88.5	88.5

Motor efficiency based on 400 V, 50 Hz

Technical data Wilo-Comfort COR Helix VE.../CCe

Dimension drawing

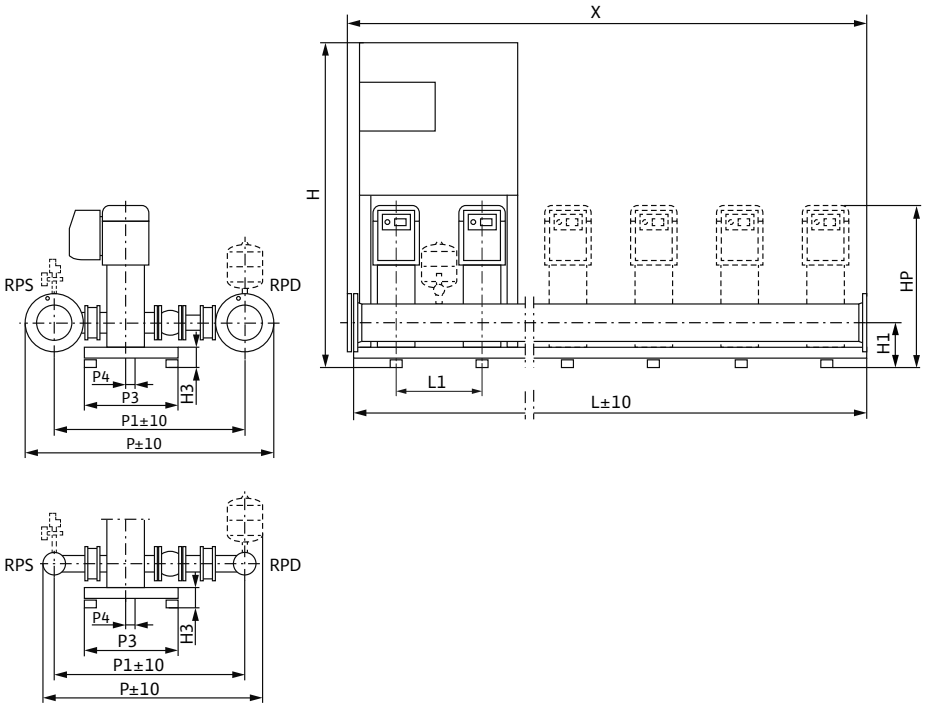

Sample systems are shown. Switchbox position depends on pump height.
Accessories (to be ordered separately): Optional WMS low-water cut-out switchgear kit
Installation surface: flat and horizontal
Installation location: dry, well ventilated and frost-proof

Dimensions, weights

Wilo-Comfort COR 2-6...	Nominal diameters of the pipe connections on suction side	Nominal diameters of pipe connections on the pressure side	Dimensions											Weight approx.
	RPS	*RPD*	*H*	*H1*	*H3*	*HP*	*L*	*L1*	*P*	*P1*	*P3*	*P4*	*X*	*m*
			mm											kg
COR-2 Helix VE 1009/K/CCe	R 2½	R 2½	1705	212	122	1328	1580	500	895	754	500	20	1000	316
COR-3 Helix VE 1009/K/CCe	R 3	R 3	1705	212	122	1328	2080	500	915	767	500	20	1500	444
COR-4 Helix VE 1009/K/CCe	R 3	R 3	1705	212	122	1328	2580	500	915	767	500	20	2000	587
COR-5 Helix VE 1009/K/CCe	DN 100	DN 100	1705	212	122	1328	3080	500	1012	792	500	20	2500	750
COR-6 Helix VE 1009/K/CCe	DN 100	DN 100	1705	212	122	1328	3800	500	1012	792	500	20	3000	898

Technical data Wilo-Comfort COR Helix VE.../CCe

Pump curves

Wilo-Comfort COR 2-6 Helix VE 1602/CCe

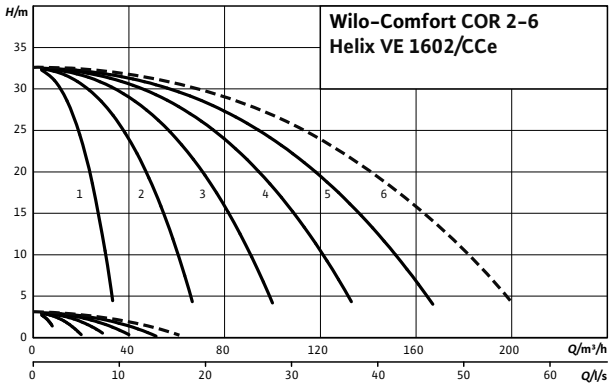

---- einschließlich Reservepumpe

Motor data per pump					
Wilo-Comfort COR 2-6...	**Nominal motor power**	**Nominal current 3~400 V, 50 Hz**	**Motor efficiency**		
	P_2	I_N	$\eta_{m\ 50\%}$	$\eta_{m\ 75\%}$	$\eta_{m\ 100\%}$
	kW	A	%		
Helix VE 1602/K/CCe	2.2	5.6	81.0	84.0	85.5

Motor efficiency based on 400 V, 50 Hz

Technical data Wilo-Comfort COR Helix VE.../CCe

Dimension drawing

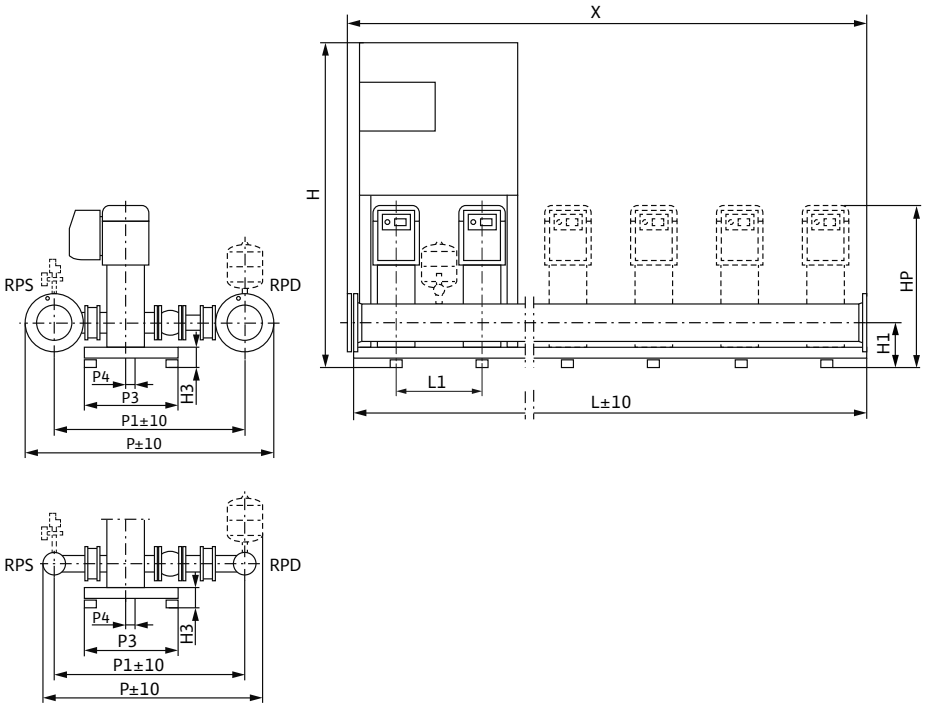

Sample systems are shown. Switchbox position depends on pump height.
Accessories (to be ordered separately): Optional WMS low-water cut-out switchgear kit
Installation surface: flat and horizontal
Installation location: dry, well ventilated and frost-proof

Dimensions, weights

Wilo-Comfort COR 2-6...	Nominal diameters of the pipe connections on suction side	Nominal diameters of pipe connections on the pressure side	Dimensions											Weight approx.
	RPS	*RPD*	*H*	*H1*	*H3*	*HP*	*L*	*L1*	*P*	*P1*	*P3*	*P4*	*X*	*m*
			mm											kg
COR-2 Helix VE 1602/K/CCe	R 3	R 3	1685	195	105	851	600	300	980	785	450	25	600	164
COR-3 Helix VE 1602/K/CCe	DN 100	DN 100	1685	195	105	851	900	300	1036	816	450	25	900	259
COR-4 Helix VE 1602/K/CCe	DN 100	DN 100	1685	195	105	851	1200	300	1036	816	450	25	1200	324
COR-5 Helix VE 1602/K/CCe	DN 100	DN 100	1685	195	105	851	1500	300	1036	816	470	25	1500	388
COR-6 Helix VE 1602/K/CCe	DN 125	DN 125	1685	195	105	851	1800	300	1088	838	470	25	1800	474

Technical data Wilo-Comfort COR Helix VE.../CCe

Pump curves

Wilo-Comfort COR 2-6 Helix VE 1603-3kw/CCe

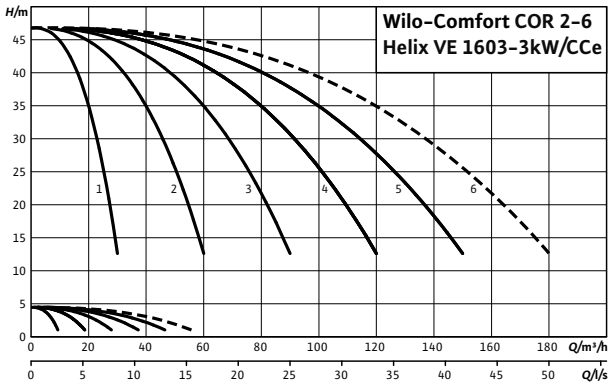

---- including standby pump

Motor data for each pump

Wilo-Comfort COR-...	Nominal motor power	Nominal current 3~400 V, 50 Hz	Motor efficiency		
	P_2	I_N	$\eta_{m\ 50\%}$	$\eta_{m\ 75\%}$	$\eta_{m\ 100\%}$
	kW	A	%		
Helix VE 1603/K-3kw/CCe	3	9	84.2	87.5	87.5

Motor efficiency based on 400 V, 50 Hz

Technical data Wilo-Comfort COR Helix VE.../CCe

Dimension drawing

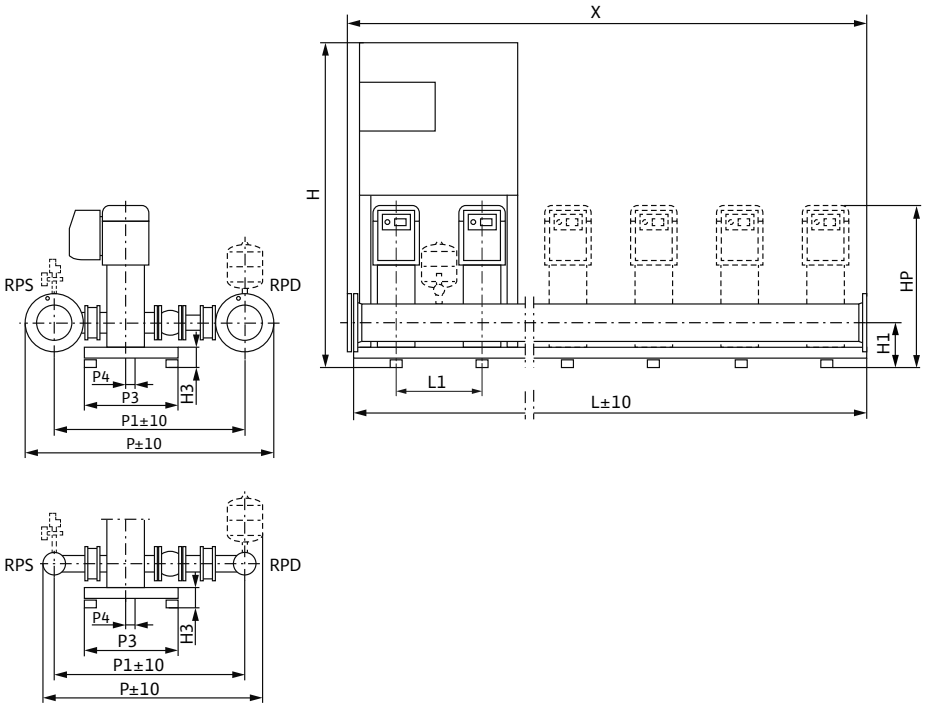

Sample systems are shown. Switchbox position depends on pump height.
Accessories (to be ordered separately): Optional WMS low-water cut-out switchgear kit
Installation surface: flat and horizontal
Installation location: dry, well ventilated and frost-proof

Dimensions, weights

Wilo-Comfort COR-...	Nominal diameters of the pipe connections on suction side	Nominal diameters of pipe connections on the pressure side	Dimensions											Weight approx.
	RPS	*RPD*	*H*	*H1*	*H3*	*HP*	*L*	*L1*	*P*	*P1*	*P3*	*P4*	*X*	*m*
			mm											kg
COR-2 Helix VE 1603/K-3kw/CCe	R 3	R 3	1685	195	105	944	600	300	980	785	450	25	600	210
COR-3 Helix VE 1603/K-3kw/CCe	DN 100	DN 100	1685	195	105	944	900	300	1036	816	450	25	900	329
COR-4 Helix VE 1603/K-3kw/CCe	DN 100	DN 100	1685	195	105	944	1200	300	1036	816	450	25	1200	404
COR-5 Helix VE 1603/K-3kw/CCe	DN 100	DN 100	1885	195	105	944	1500	300	1036	816	470	25	1500	507
COR-6 Helix VE 1603/K-3kw/CCe	DN 125	DN 125	1885	195	105	944	1800	300	1088	838	470	25	1800	619

Technical data Wilo-Comfort COR Helix VE.../CCe

Pump curves

Wilo-Comfort COR 2-6 Helix VE 1603/CCe

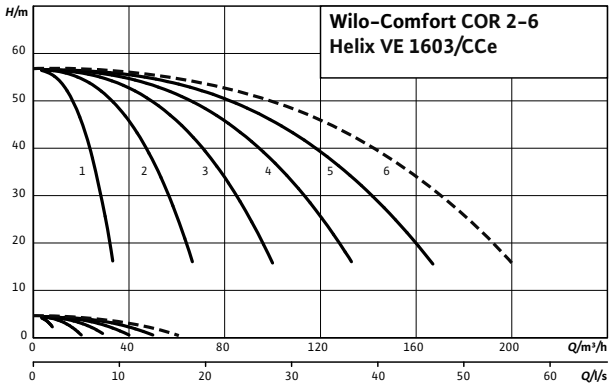

---- including standby pump

Motor data per pump					
Wilo-Comfort COR 2-6...	**Nominal motor power**	**Nominal current 3~400 V, 50 Hz**	**Motor efficiency**		
	P_2	I_N	$\eta_{m\ 50\%}$	$\eta_{m\ 75\%}$	$\eta_{m\ 100\%}$
	kW	A	%		
Helix VE 1603/K/CCe	4	9.7	84.5	87.1	87.5

Motor efficiency based on 400 V, 50 Hz

Technical data Wilo-Comfort COR Helix VE.../CCe

Dimension drawing

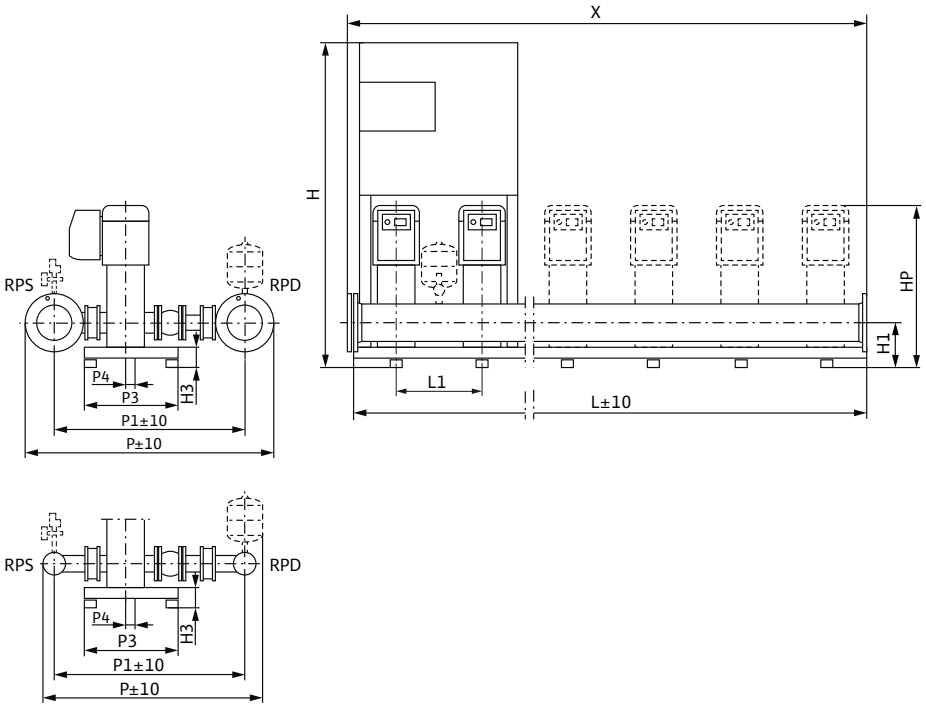

Sample systems are shown. Switchbox position depends on pump height.
Accessories (to be ordered separately): Optional WMS low-water cut-out switchgear kit
Installation surface: flat and horizontal
Installation location: dry, well ventilated and frost-proof

Dimensions, weights

Wilo-Comfort COR 2-6...	Nominal diameters of the pipe connections on suction side	Nominal diameters of pipe connections on the pressure side	Dimensions											Weight approx.
	RPS	*RPD*	*H*	*H1*	*H3*	*HP*	*L*	*L1*	*P*	*P1*	*P3*	*P4*	*X*	*m*
			mm											kg
COR-2 Helix VE 1603/K/CCe	R 3	R 3	1685	195	105	961	600	300	980	785	450	25	600	186
COR-3 Helix VE 1603/K/CCe	DN 100	DN 100	1685	195	105	961	900	300	1036	816	450	25	900	292
COR-4 Helix VE 1603/K/CCe	DN 100	DN 100	1685	195	105	961	1200	300	1036	816	450	25	1200	368
COR-5 Helix VE 1603/K/CCe	DN 100	DN 100	1885	195	105	961	1500	300	1036	816	470	25	1500	443
COR-6 Helix VE 1603/K/CCe	DN 125	DN 125	1885	195	105	961	1800	300	1088	838	470	25	1800	540

Technical data Wilo-Comfort COR Helix VE.../CCe

Pump curves

Wilo-Comfort COR 2-6 Helix V 1605/CCe

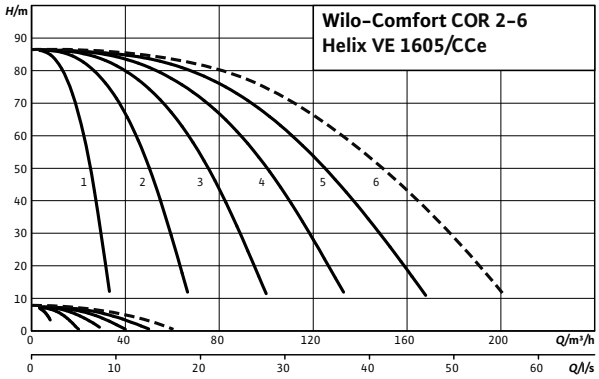

---- including standby pump

Motor data per pump					
Wilo-Comfort COR 2-6...	**Nominal motor power**	**Nominal current 3~400 V, 50 Hz**	**Motor efficiency**		
	P_2	I_N	$\eta_{m\ 50\%}$	$\eta_{m\ 75\%}$	$\eta_{m\ 100\%}$
	kW	A	%		
Helix VE 1605/K/CCe	5.5	11	87.4	88.5	88.5

Motor efficiency based on 400 V, 50 Hz

Technical data Wilo-Comfort COR Helix VE.../CCe

Dimension drawing

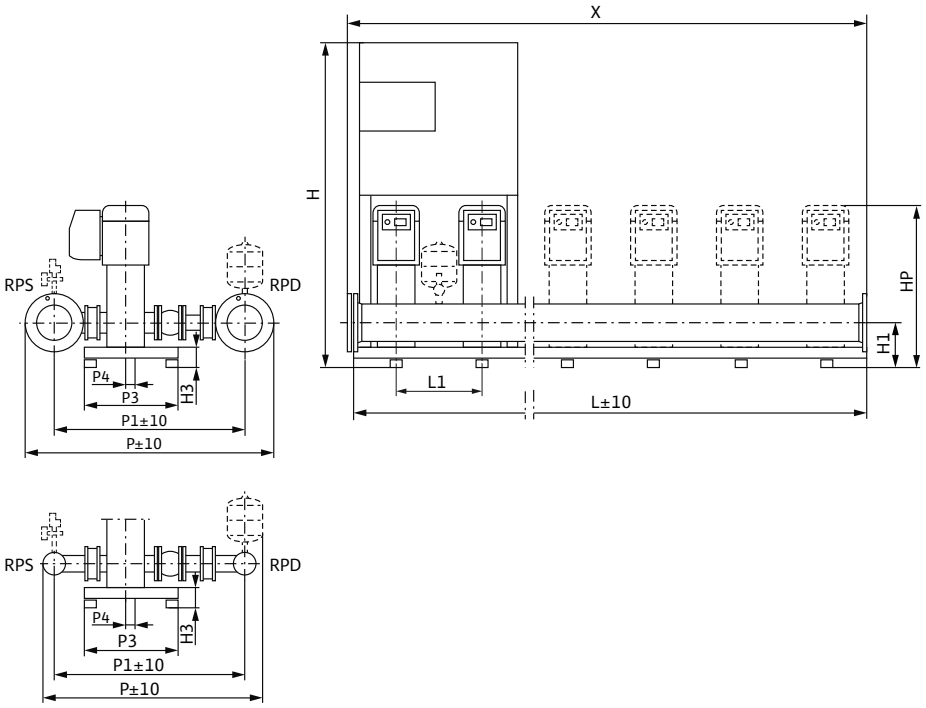

Sample systems are shown. Switchbox position depends on pump height.
Accessories (to be ordered separately): Optional WMS low-water cut-out switchgear kit
Installation surface: flat and horizontal
Installation location: dry, well ventilated and frost-proof

Dimensions, weights

Wilo-Comfort COR 2-6...	Nominal diameters of the pipe connections on suction side	Nominal diameters of pipe connections on the pressure side	Dimensions											Weight approx.
	RPS	*RPD*	*H*	*H1*	*H3*	*HP*	*L*	*L1*	*P*	*P1*	*P3*	*P4*	*X*	*m*
			mm											kg
COR-2 Helix VE 1605/K/CCe	R 3	R 3	1705	212	122	1241	1580	500	980	785	500	20	1000	308
COR-3 Helix VE 1605/K/CCe	DN 100	DN 100	1705	212	122	1241	2080	500	1036	816	500	20	1500	467
COR-4 Helix VE 1605/K/CCe	DN 100	DN 100	1705	212	122	1241	2580	500	1036	816	500	20	2000	605
COR-5 Helix VE 1605/K/CCe	DN 100	DN 100	1705	212	122	1241	3080	500	1036	816	500	20	2500	719
COR-6 Helix VE 1605/K/CCe	DN 125	DN 125	1705	212	122	1241	3800	500	1088	838	500	20	3000	894

Technical data Wilo-Comfort COR Helix VE.../CCe

Pump curves

Wilo-Comfort COR 2-6 Helix VE 1606/CCe

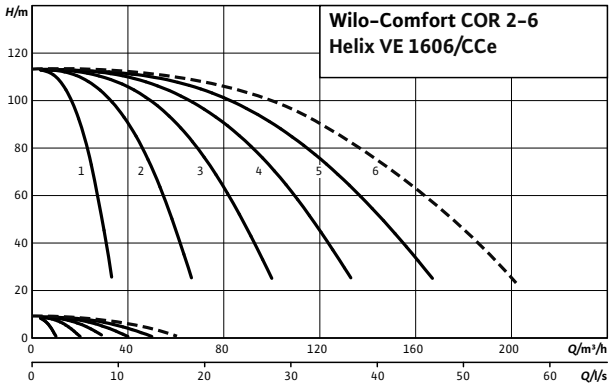

---- including standby pump

Motor data per pump					
Wilo-Comfort COR 2-6...	**Nominal motor power**	**Nominal current 3~400 V, 50 Hz**	**Motor efficiency**		
	P_2	I_N	$\eta_{m\ 50\%}$	$\eta_{m\ 75\%}$	$\eta_{m\ 100\%}$
	kW	A	%		
Helix VE 1606/K/CCe	7.5	14.3	88.4	89.5	89.5

Motor efficiency based on 400 V, 50 Hz

Technical data Wilo-Comfort COR Helix VE.../CCe

Dimension drawing

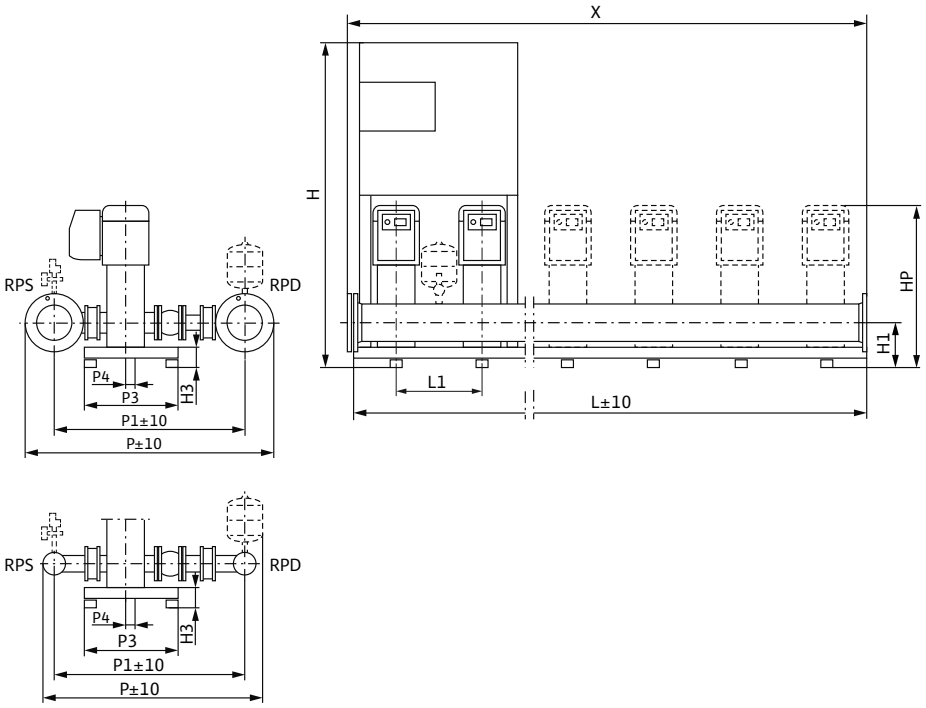

Sample systems are shown. Switchbox position depends on pump height.
Accessories (to be ordered separately): Optional WMS low-water cut-out switchgear kit
Installation surface: flat and horizontal
Installation location: dry, well ventilated and frost-proof

Dimensions, weights

Wilo-Comfort COR 2-6...	Nominal diameters of the pipe connections on suction side	Nominal diameters of pipe connections on the pressure side	Dimensions											Weight approx.
	RPS	*RPD*	*H*	*H1*	*H3*	*HP*	*L*	*L1*	*P*	*P1*	*P3*	*P4*	*X*	*m*
			mm											kg
COR-2 Helix VE 1606/K/CCe	R 3	R 3	1705	212	122	1291	1580	500	980	785	500	20	1000	318
COR-3 Helix VE 1606/K/CCe	DN 100	DN 100	1705	212	122	1291	2080	500	1036	816	500	20	1500	482
COR-4 Helix VE 1606/K/CCe	DN 100	DN 100	1705	212	122	1291	2580	500	1036	816	500	20	2000	625
COR-5 Helix VE 1606/K/CCe	DN 100	DN 100	1705	212	122	1291	3080	500	1036	816	500	20	2500	744
COR-6 Helix VE 1606/K/CCe	DN 125	DN 125	1705	212	122	1291	3800	500	1088	838	500	20	3000	929

Pressure boosting

Multi-pump systems, speed-controlled

Series description Wilo-Comfort-Vario COR Helix VE.../VR

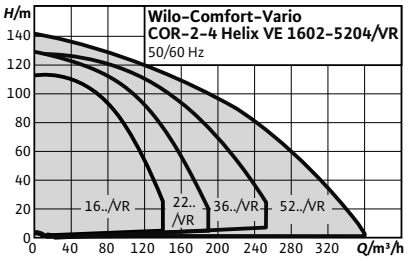

Design

Highly efficient water supply unit ready for connection (non self-priming) With 2 to 4 vertically arranged stainless steel high-pressure centrifugal pumps in glanded design of the Helix VE which are switched in parallel; every pump is equipped with an integrated air-cooled frequency converter, including Vario controller VR

Type key

Example:	**Wilo-COR-4 Helix VE 2203/K/VR**
COR	Compact pressure boosting system with integrated speed control
4	Number of pumps
Helix VE	Pump series
22	Nominal flow rate [m^3/h] of single pump
03	Number of single-pump stages
K	With cartridge mechanical seal
VR	Control unit; VR = Vario controller

Application

- Fully automatic water supply and pressure boosting in residential, commercial and public buildings, hotels, hospitals, department stores and for industrial systems.
- Pumping of potable water, process water, cooling water, fire water (apart from fire-extinguishing systems in accordance with DIN14462) or other water mixtures that do not attack the materials used chemically or mechanically and do not contain abrasive or long-fibre constituents

Special features/product advantages

- Sturdy system with stainless steel high-pressure multistage centrifugal pumps of the Helix VE series and air-cooled, integrated frequency converter
- High-efficiency pump hydraulics in conjunction with IE2-equivalent standard motors
- Hydraulics of entire system are pressure-loss optimised.
- Superproportionally large frequency converter control range of 25 Hz up to a maximum of 60 Hz
- Integrated dry-running detection with automatic deactivation in the event of low water via performance characteristics of the motor control electronics
- Ultimate control quality and supremely easy operation due to the VR controller used

Technical data

- Mains connection 3~400 V ± 10%, 50 Hz; 3~380/440 V ±10 %, 60 Hz
- Max. fluid temperature +50 °C (+70 °C optional)
- Max. ambient temperature 40 °C
- Operating pressure 16 bar (25 bar optional)
- Inlet pressure 10 bar
- Nominal connection diameters on discharge side R 3" - DN 200
- Nominal connection diameters on inlet side R 3" - DN 200
- Speed range 1500-3770 rpm
- Protection class: IP 54
- Fuse protection on mains side A, AC 3 according to motor power and EVU regulations
- Approved fluids (other fluids on request):
  - Potable water and secondary hot water
  - Cooling water
  - Fire water
- Note on fluids: Approved fluids are generally waters which do not attack the materials used, neither chemically nor mechanically, and do not contain any abrasive or long-fibre constituents.
  Installation complies with DIN 1988 (EN 806)

Equipment/function

- 2-4 pumps per system of the Helix VE 16 to Helix VE 52 series, with IE2-equivalent standard motors and variable auto control with integrated frequency converter in each pump
- Automatic pump control via Comfort-Vario-Controller VR
- Parts that come in contact with the fluid are corrosion-resistant
- Base frame made of galvanised steel, with height-adjustable vibration absorbers for insulation against structure-borne noise
- Shut-off valve on the suction and pressure side of each pump
- Non-return valve on the pressure side of each pump
- Diaphragm pressure vessel 8 l, PN16, pressure side
- Pressure sensor, pressure side
- Pressure gauge (pressure side)
- Optional low-water cut-out switchgear and pressure gauge (suction side)

Materials

Helix VE 16

- Impellers, diffusors, stage housing made of 1.4307 stainless steel
- Pump housing made of stainless steel 1.4301.
- Shaft made of 1.4057 stainless steel
- 1.4404 shaft protection sleeve
- O-ring gaskets made of EPDM (FKM gasket on request)
- Pipework made of 1.4571 stainless steel

Series description Wilo-Comfort-Vario COR Helix VE.../VR

Helix VE 22 to Helix VE 52
- Impellers, diffusors, stage housing made of 1.4307 stainless steel
- Pump housing made of cataphoretically coated EN- GJL 250 cast iron.
- Shaft made of 1.4057 stainless steel
- 1.4404 shaft protection sleeve
- O-ring gasket made of EPDM (FKM gasket on request)
- Pipework made of 1.4571 stainless steel

Description/design
- Base frame: galvanised steel, with height-adjustable vibration absorbers for comprehensive insulation against structure-borne noise; other versions on request
- Pipework: complete pipework made of stainless steel, suitable for the connection of all piping materials used; the pipework is dimensioned according to the overall hydraulic performance of the pressure boosting system
- Pumps: 2 to 4 pumps of the Helix VE 16 to V 52 series switched in parallel are used. The adapted, air-cooled frequency converters on the pump motor enable continuous auto control between 25 Hz and a maximum of 60 Hz for all pumps of these series. All parts that come in contact with the fluid are made of stainless steel for the Helix V 16 series or of stainless steel/grey cast iron with cataphoretic coating for the Helix VE 22 to Helix VE 52 series; other versions on request. KTW/WRAS/ACS approval for all parts that come in contact with the fluid
- Valves: each pump is fitted on the suction and pressure side with a check valve or a shut-off valve with DVGW approval mark and on the pressure side with a DVGW/KTW-approved non-return valve
- Diaphragm pressure vessel: 8 l/PN16 arranged on the discharge side with a diaphragm made of butyl rubber, with DVGW/KTW approval, completely safe in accordance with food safety laws, for testing and inspection purposes, with drain and throughflow valve with DVGW/KTW approval in accordance with DIN 4807
- Pressure sensor: 4 to 20 mA, arranged on the discharge side for controlling the central Comfort-Vario VR controller
- Pressure display: pressure gauge (ø 63 mm) arranged on the discharge side; additional digital indication of the discharge pressure in the alphanumeric LC display of the Comfort-Vario VR controller
- Switchgear/controller: The system is equipped with a Comfort-Vario VR controller as standard

Scope of delivery
- Factory-mounted, connection-ready pressure boosting system checked for functionality and impermeability
- Packaging
- Installation and operating instructions

Electrical connection

3~400 V

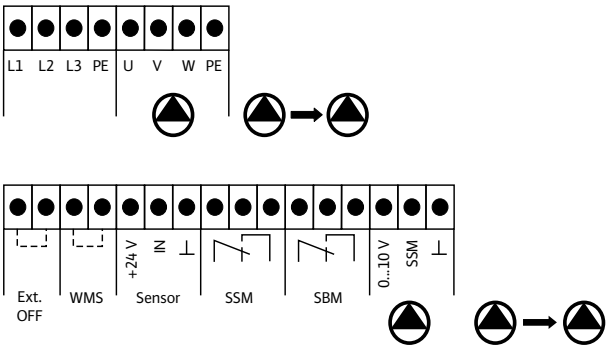

Technical data Wilo-Comfort-Vario COR Helix VE.../VR

Pump curves

Wilo-Comfort-Vario COR -2 - COR-4 Helix VE 1602/VR

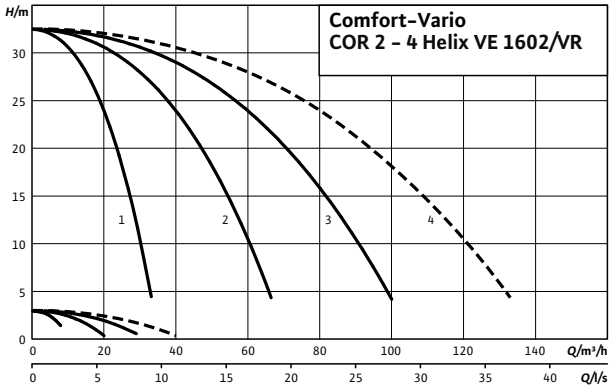

---- including standby pump

Motor data per pump					
Wilo-Comfort-Vario COR-2-4...	**Nominal motor power**	**Nominal current 3~400 V, 50 Hz**	**Motor efficiency**		
	P_2	I_N	$\eta_{m\ 50\%}$	$\eta_{m\ 75\%}$	$\eta_{m\ 100\%}$
	kW	A	%		
Helix VE 1602/K/VR	2.2	5.6	81.0	84.0	85.5

Motor efficiency based on 400 V, 50 Hz

Technical data Wilo-Comfort-Vario COR Helix VE.../VR

Dimension drawing

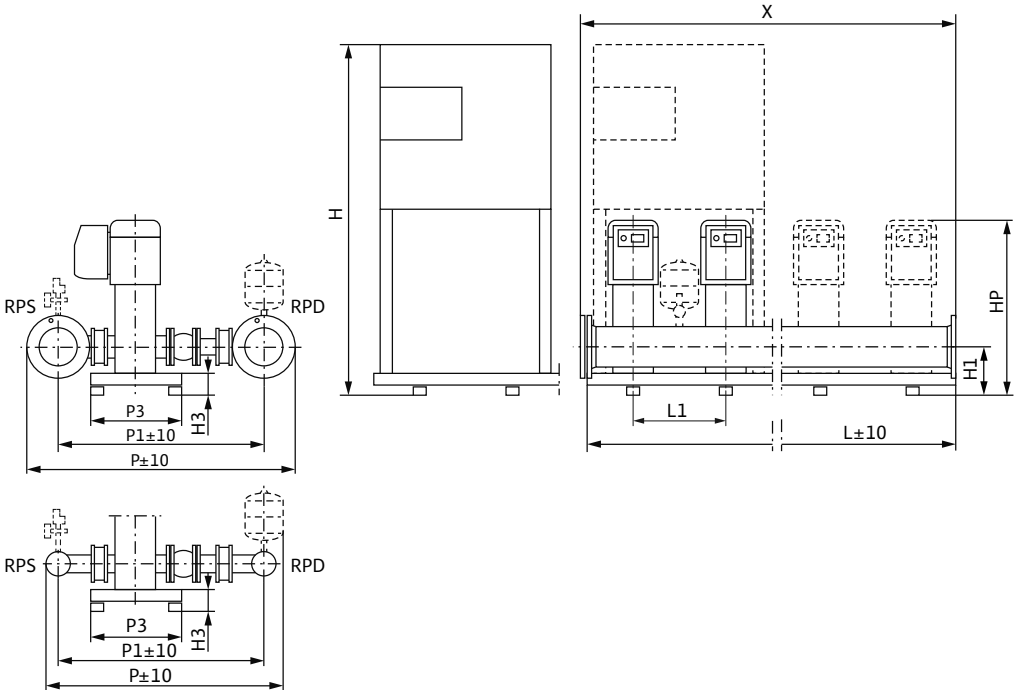

Sample systems are shown. Switchbox position depends on pump height.
Accessories (to be ordered separately): Optional WMS low-water cut-out switchgear kit
Installation surface: flat and horizontal
Installation location: dry, well ventilated and frost-proof

Dimensions, weights

Wilo-Comfort-Vario COR-2-4...	Nominal diameters of the pipe connections on suction side	Nominal diameters of pipe connections on the pressure side	Dimensions										Weight approx.
	RPS	*RPD*	*H*	*H1*	*H3*	*HP*	*L*	*L1*	*P*	*P1*	*P3*	*X*	*m*
			mm										kg
COR-2 Helix VE 1602/K/VR	R 3	R 3	1390	195	105	850	600	300	935	785	450	600	152
COR-3 Helix VE 1602/K/VR	DN 100	DN 100	1390	195	105	850	900	300	1036	816	450	900	250
COR-4 Helix VE 1602/K/VR	DN 100	DN 100	1390	195	105	850	1200	300	1036	816	450	1200	314

Technical data Wilo-Comfort-Vario COR Helix VE.../VR

Pump curves

Wilo-Comfort-Vario COR -2 - COR-4 Helix VE 1603/VR

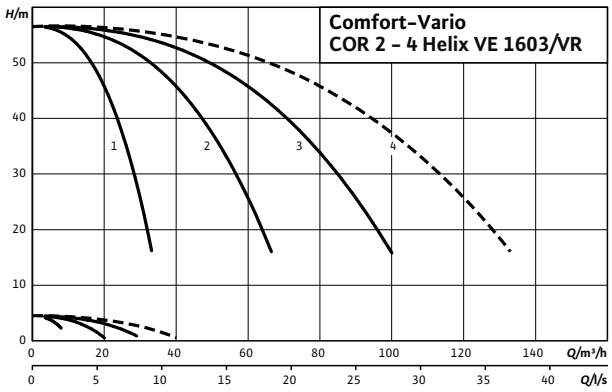

---- including standby pump

Motor data per pump					
Wilo-Comfort-Vario COR-2-4...	**Nominal motor power**	**Nominal current 3~400 V, 50 Hz**	**Motor efficiency**		
	P_2	I_N	$\eta_{m\ 50\%}$	$\eta_{m\ 75\%}$	$\eta_{m\ 100\%}$
	kW	A	%		
Helix VE 1603/K/VR	4	9.7	84.5	87.1	87.5

Motor efficiency based on 400 V, 50 Hz

Technical data Wilo-Comfort-Vario COR Helix VE.../VR

Dimension drawing

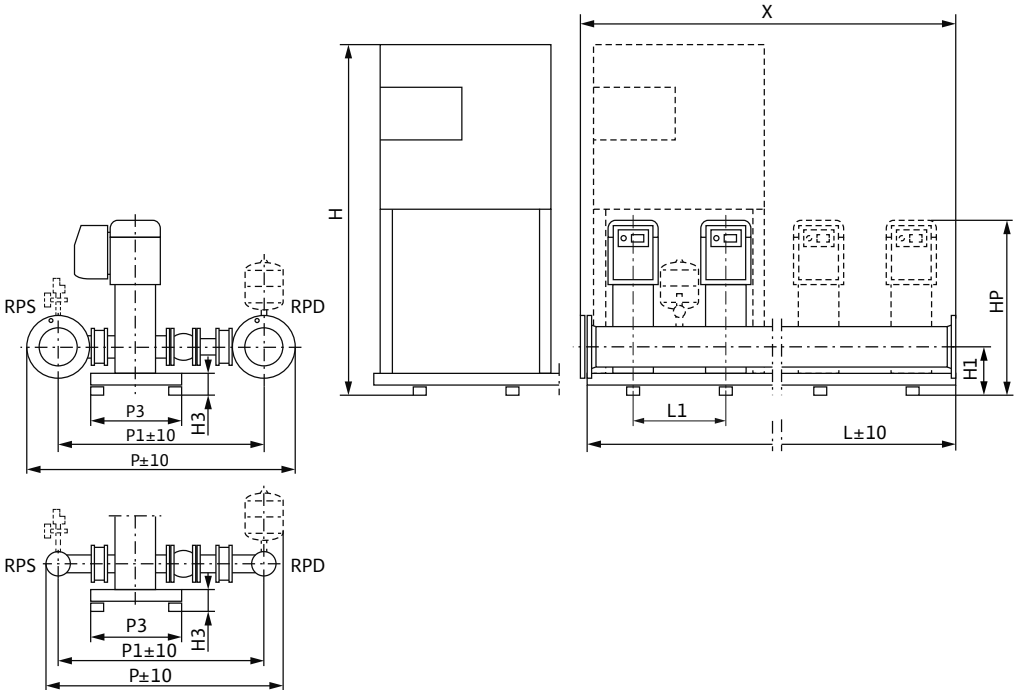

Sample systems are shown. Switchbox position depends on pump height.
Accessories (to be ordered separately): Optional WMS low-water cut-out switchgear kit
Installation surface: flat and horizontal
Installation location: dry, well ventilated and frost-proof

Dimensions, weights

Wilo-Comfort-Vario COR-2-4...	Nominal diameters of the pipe connections on suction side	Nominal diameters of pipe connections on the pressure side	Dimensions										Weight approx.
	RPS	*RPD*	*H*	*H1*	*H3*	*HP*	*L*	*L1*	*P*	*P1*	*P3*	*X*	*m*
			mm										kg
COR-2 Helix VE 1603/K/VR	R 3	R 3	1390	195	105	962	600	300	935	785	450	600	174
COR-3 Helix VE 1603/K/VR	DN 100	DN 100	1390	195	105	962	900	300	1036	816	450	900	283
COR-4 Helix VE 1603/K/VR	DN 100	DN 100	1390	195	105	962	1200	300	1036	816	450	1200	358

Technical data Wilo-Comfort-Vario COR Helix VE.../VR

Pump curves

Wilo-Comfort-Vario COR -2 - COR-4 Helix VE 1605/VR

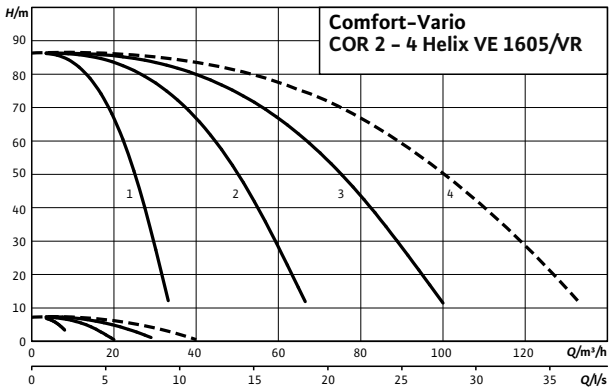

---- including standby pump

Motor data per pump					
Wilo-Comfort-Vario COR-2-4...	**Nominal motor power**	**Nominal current 3~400 V, 50 Hz**	**Motor efficiency**		
	P_2	I_N	$\eta_{m\ 50\%}$	$\eta_{m\ 75\%}$	$\eta_{m\ 100\%}$
	kW	A	%		
Helix VE 1605/K/VR	5.5	11	87.4	88.5	88.5

Motor efficiency based on 400 V, 50 Hz

Technical data Wilo-Comfort-Vario COR Helix VE.../VR

Dimension drawing

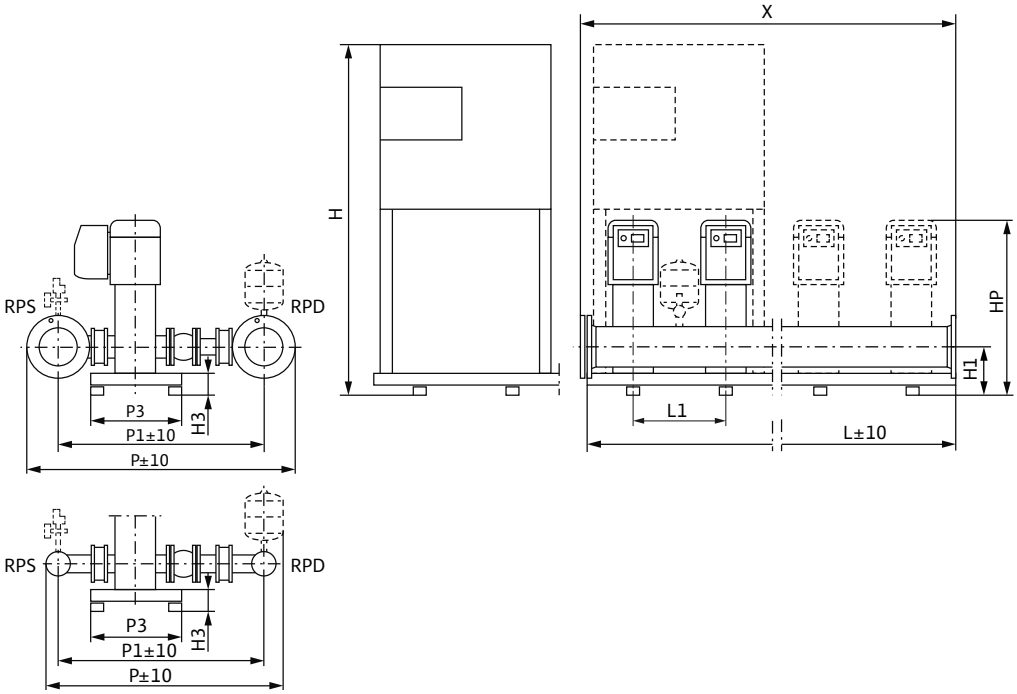

Sample systems are shown. Switchbox position depends on pump height.
Accessories (to be ordered separately): Optional WMS low-water cut-out switchgear kit
Installation surface: flat and horizontal
Installation location: dry, well ventilated and frost-proof

Dimensions, weights

Wilo-Comfort-Vario COR-2-4...	Nominal diameters of the pipe connections on suction side	Nominal diameters of pipe connections on the pressure side	Dimensions										Weight approx.
	RPS	*RPD*	*H*	*H1*	*H3*	*HP*	*L*	*L1*	*P*	*P1*	*P3*	*X*	*m*
			mm										kg
COR-2 Helix VE 1605/K/VR	R 3	R 3	1235	212	122	1241	1580	500	935	785	500	1000	293
COR-3 Helix VE 1605/K/VR	DN 100	DN 100	1335	212	122	1241	2080	500	1036	816	500	1500	460
COR-4 Helix VE 1605/K/VR	DN 100	DN 100	1335	212	122	1241	2580	500	1036	816	500	2000	590

Technical data Wilo-Comfort-Vario COR Helix VE.../VR

Pump curves

Wilo-Comfort-Vario COR -2 - COR-4 Helix VE 1606/VR

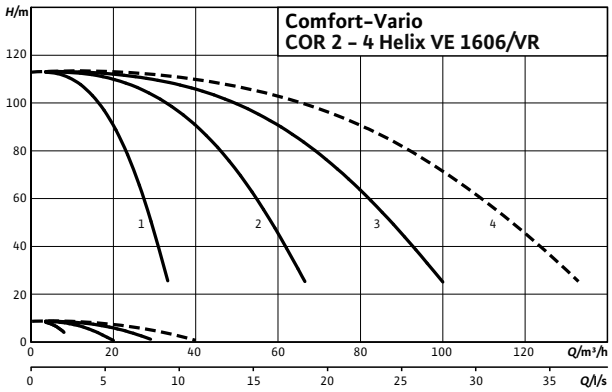

---- including standby pump

Motor data per pump					
Wilo-Comfort-Vario COR-2-4...	**Nominal motor power**	**Nominal current 3~400 V, 50 Hz**	**Motor efficiency**		
	P_2	I_N	$\eta_{m\ 50\%}$	$\eta_{m\ 75\%}$	$\eta_{m\ 100\%}$
	kW	A	%		
Helix VE 1606/K/VR	7.5	14.3	88.4	89.5	89.5

Motor efficiency based on 400 V, 50 Hz

Technical data Wilo-Comfort-Vario COR Helix VE.../VR

Dimension drawing

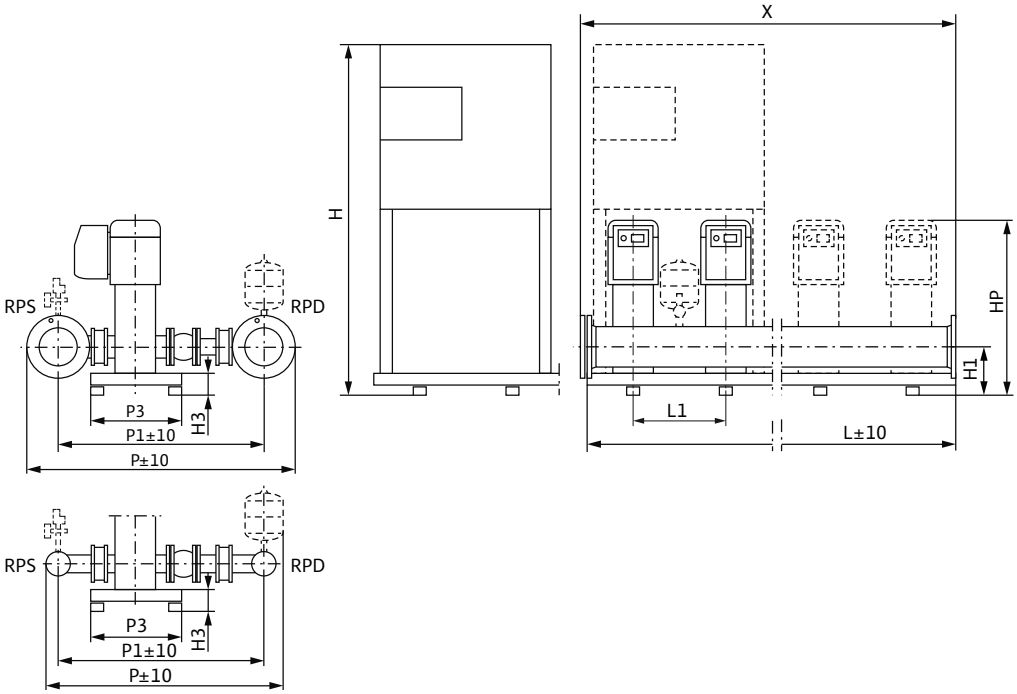

Sample systems are shown. Switchbox position depends on pump height.
Accessories (to be ordered separately): Optional WMS low-water cut-out switchgear kit
Installation surface: flat and horizontal
Installation location: dry, well ventilated and frost-proof

Dimensions, weights

Wilo-Comfort-Vario COR-2-4...	Nominal diameters of the pipe connections on suction side	Nominal diameters of pipe connections on the pressure side	Dimensions										Weight approx.
	RPS	*RPD*	*H*	*H1*	*H3*	*HP*	*L*	*L1*	*P*	*P1*	*P3*	*X*	*m*
			mm										kg
COR-2 Helix VE 1606/K/VR	R 3	R 3	1235	212	122	1291	1580	500	935	785	500	1000	303
COR-3 Helix VE 1606/K/VR	DN 100	DN 100	1335	212	122	1291	2080	500	1036	816	500	1500	475
COR-4 Helix VE 1606/K/VR	DN 100	DN 100	1335	212	122	1291	2580	500	1036	816	500	2000	610

Technical data Wilo-Comfort-Vario COR Helix VE.../VR

Pump curves

Wilo-Comfort-Vario COR -2 - COR-4 Helix VE 2202/VR

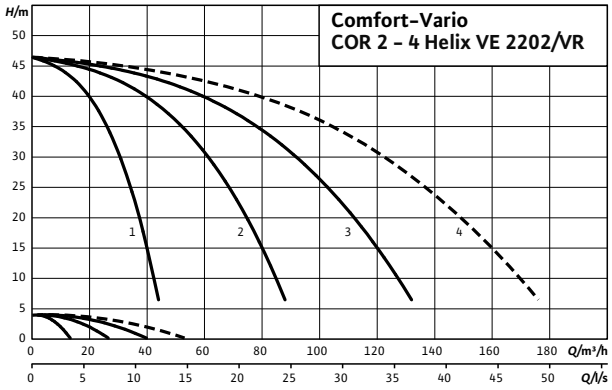

---- including standby pump

Motor data per pump					
Wilo-Comfort-Vario COR-2-4...	**Nominal motor power**	**Nominal current 3~400 V, 50 Hz**	**Motor efficiency**		
	P_2	I_N	$\eta_{m\ 50\%}$	$\eta_{m\ 75\%}$	$\eta_{m\ 100\%}$
	kW	A	%		
Helix VE 2202/K/VR	4	9.7	84.5	87.1	87.5

Motor efficiency based on 400 V, 50 Hz

Technical data Wilo-Comfort-Vario COR Helix VE.../VR

Dimension drawing

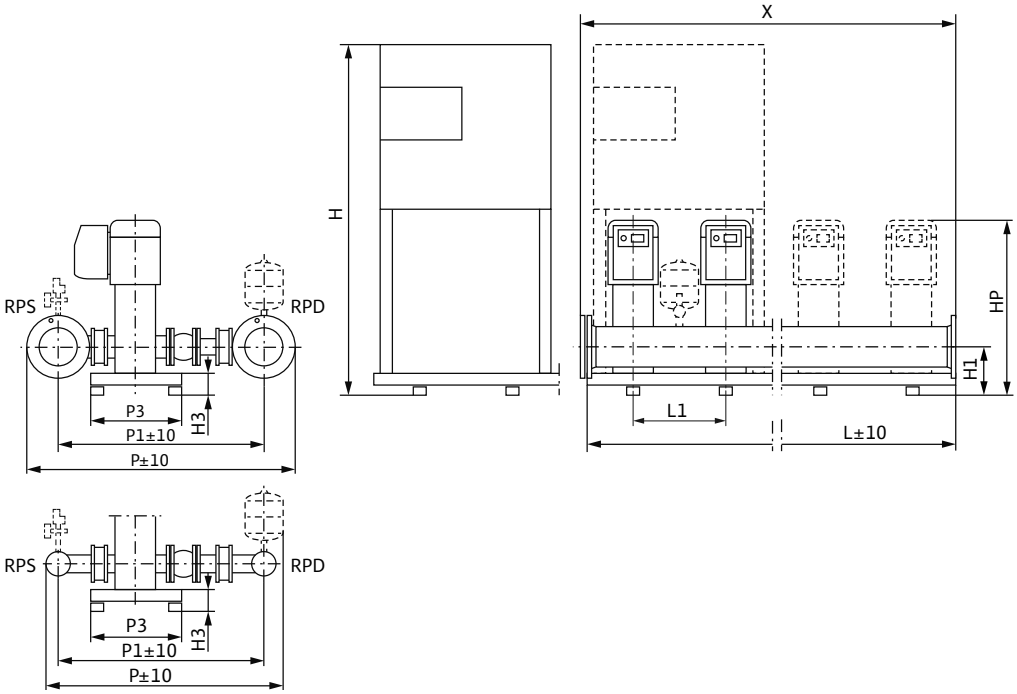

Sample systems are shown. Switchbox position depends on pump height.
Accessories (to be ordered separately): Optional WMS low-water cut-out switchgear kit
Installation surface: flat and horizontal
Installation location: dry, well ventilated and frost-proof

Dimensions, weights

Wilo-Comfort-Vario COR-2-4...	Nominal diameters of the pipe connections on suction side	Nominal diameters of pipe connections on the pressure side	Dimensions										Weight approx.
	RPS	*RPD*	*H*	*H1*	*H3*	*HP*	*L*	*L1*	*P*	*P1*	*P3*	*X*	*m*
			mm										kg
COR-2 Helix VE 2202/VR	R 3	R 3	1305	215	125	1010	1580	500	1147	1000	500	1000	276
COR-3 Helix VE 2202/K/VR	DN 100	DN 100	1305	215	125	1010	2080	500	1245	1025	500	1500	414
COR-4 Helix VE 2202/K/VR	DN 125	DN 125	1305	215	125	1010	2580	500	1300	1050	500	2000	558

Technical data Wilo-Comfort-Vario COR Helix VE.../VR

Pump curves

Wilo-Comfort-Vario COR -2 - COR-4 Helix VE 2203/VR

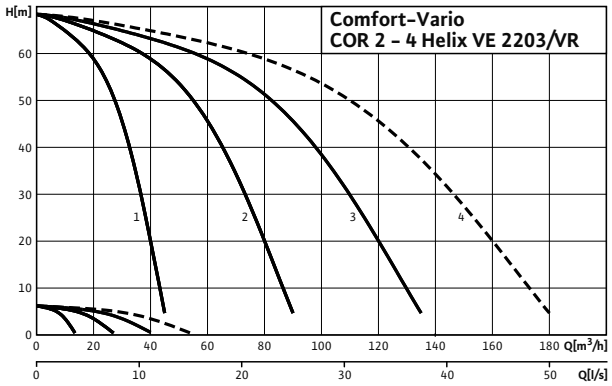

---- including standby pump

Motor data per pump					
Wilo-Comfort-Vario COR-2-4...	**Nominal motor power**	**Nominal current 3~400 V, 50 Hz**	**Motor efficiency**		
	P_2	I_N	$\eta_{m\ 50\%}$	$\eta_{m\ 75\%}$	$\eta_{m\ 100\%}$
	kW	A	%		
Helix VE 2203/K/VR	5.5	11	87.4	88.5	88.5

Motor efficiency based on 400 V, 50 Hz

Technical data Wilo-Comfort-Vario COR Helix VE.../VR

Dimension drawing

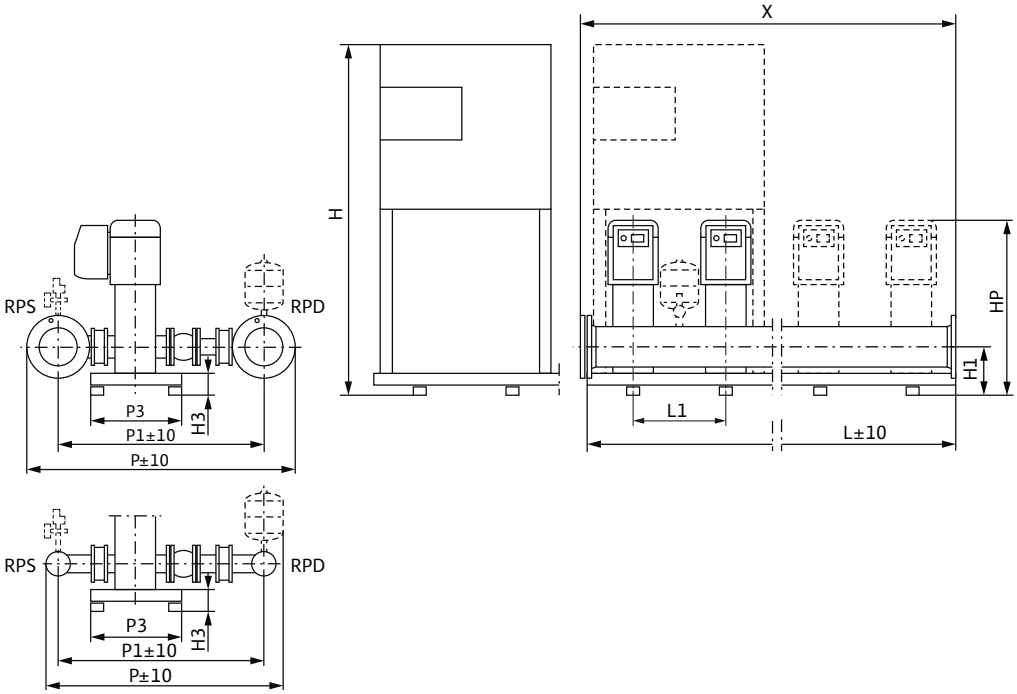

Sample systems are shown. Switchbox position depends on pump height.
Accessories (to be ordered separately): Optional WMS low-water cut-out switchgear kit
Installation surface: flat and horizontal
Installation location: dry, well ventilated and frost-proof

Dimensions, weights

Wilo-Comfort-Vario COR-2-4...	Nominal diameters of the pipe connections on suction side	Nominal diameters of pipe connections on the pressure side	Dimensions										Weight approx.
	RPS	*RPD*	*H*	*H1*	*H3*	*HP*	*L*	*L1*	*P*	*P1*	*P3*	*X*	*m*
			mm										kg
COR-2 Helix VE 2203/K/VR	R 3	R 3	1405	215	125	1229	1580	500	1147	1000	500	1000	357
COR-3 Helix VE 2203/K/VR	DN 100	DN 100	1335	215	125	1229	2080	500	1245	1025	500	1500	533
COR-4 Helix VE 2203/K/VR	DN 125	DN 125	1335	215	125	1229	2580	500	1300	1050	500	2000	716

Technical data Wilo-Comfort-Vario COR Helix VE.../VR

Pump curves

Wilo-Comfort-Vario COR -2 - COR-4 Helix VE 2204/VR

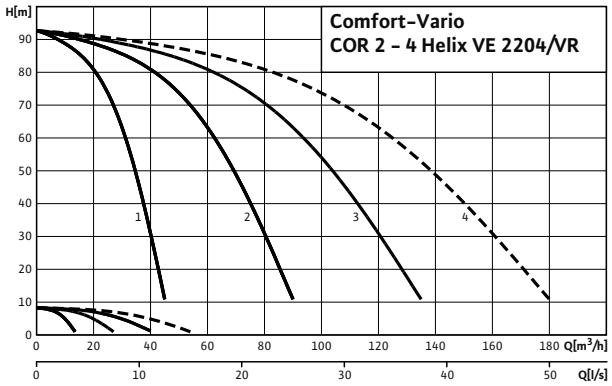

---- including standby pump

Motor data per pump					
Wilo-Comfort-Vario COR-2-4...	**Nominal motor power**	**Nominal current 3~400 V, 50 Hz**	**Motor efficiency**		
	P_2	I_N	$\eta_{m\ 50\%}$	$\eta_{m\ 75\%}$	$\eta_{m\ 100\%}$
	kW	A	%		
Helix VE 2204/K/VR	7.5	14.3	88.4	89.5	89.5

Motor efficiency based on 400 V, 50 Hz

Technical data Wilo-Comfort-Vario COR Helix VE.../VR

Dimension drawing

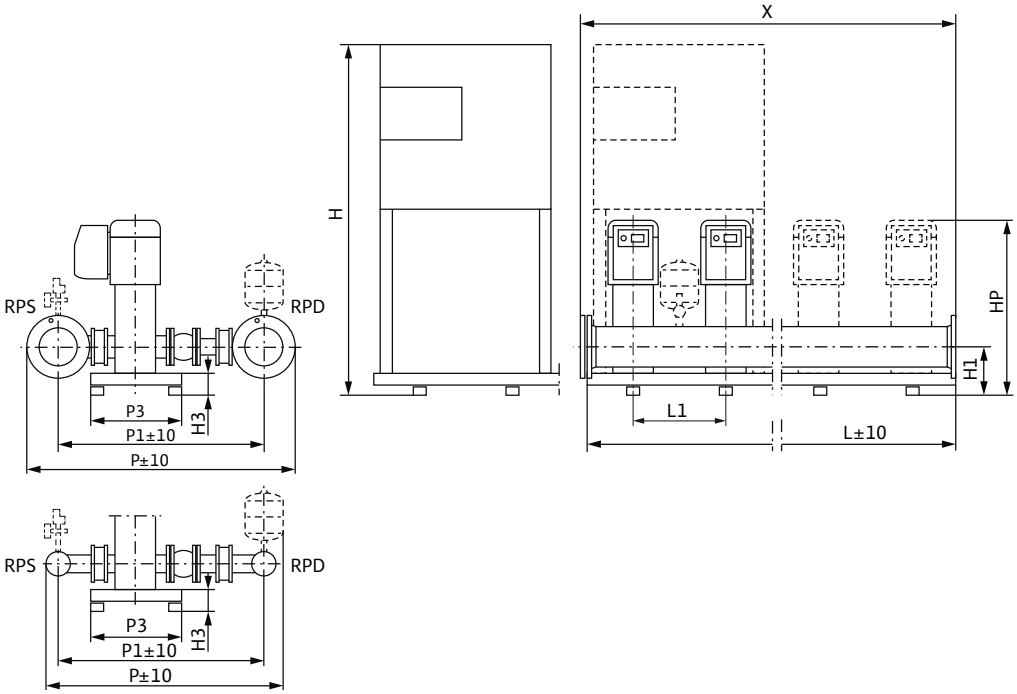

Sample systems are shown. Switchbox position depends on pump height.
Accessories (to be ordered separately): Optional WMS low-water cut-out switchgear kit
Installation surface: flat and horizontal
Installation location: dry, well ventilated and frost-proof

Dimensions, weights

Wilo-Comfort-Vario COR-2-4...	Nominal diameters of the pipe connections on suction side	Nominal diameters of pipe connections on the pressure side	Dimensions										Weight approx.
	RPS	*RPD*	*H*	*H1*	*H3*	*HP*	*L*	*L1*	*P*	*P1*	*P3*	*X*	*m*
			mm										kg
COR-2 Helix VE 2204/K/VR	R 3	R 3	1405	215	125	1279	1580	500	1147	1000	500	1000	359
COR-3 Helix VE 2204/K/VR	DN 100	DN 100	1335	215	125	1279	2080	500	1245	1025	500	1500	537
COR-4 Helix VE 2204/K/VR	DN 125	DN 125	1335	215	125	1279	2580	500	1300	1050	500	2000	720

Technical data Wilo-Comfort-Vario COR Helix VE.../VR

Pump curves

Wilo-Comfort-Vario COR -2 - COR-4 Helix VE 2205/VR

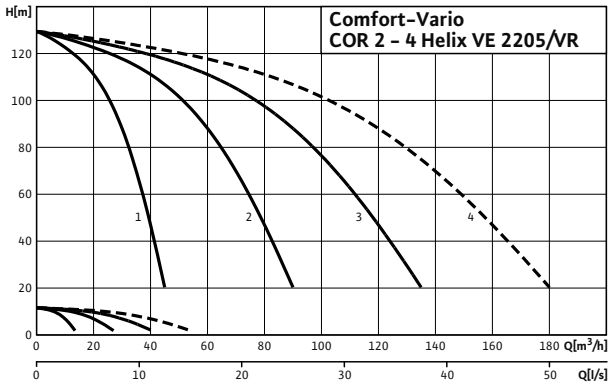

---- including standby pump

Motor data per pump					
Wilo-Comfort-Vario COR-2-4...	**Nominal motor power**	**Nominal current 3~400 V, 50 Hz**	**Motor efficiency**		
	P_2	I_N	$\eta_{m\ 50\%}$	$\eta_{m\ 75\%}$	$\eta_{m\ 100\%}$
	kW	A	%		
Helix VE 2205/K/VR	11	21.2	88.8	90.2	90.5

Motor efficiency based on 400 V, 50 Hz

Technical data Wilo-Comfort-Vario COR Helix VE.../VR

Dimension drawing

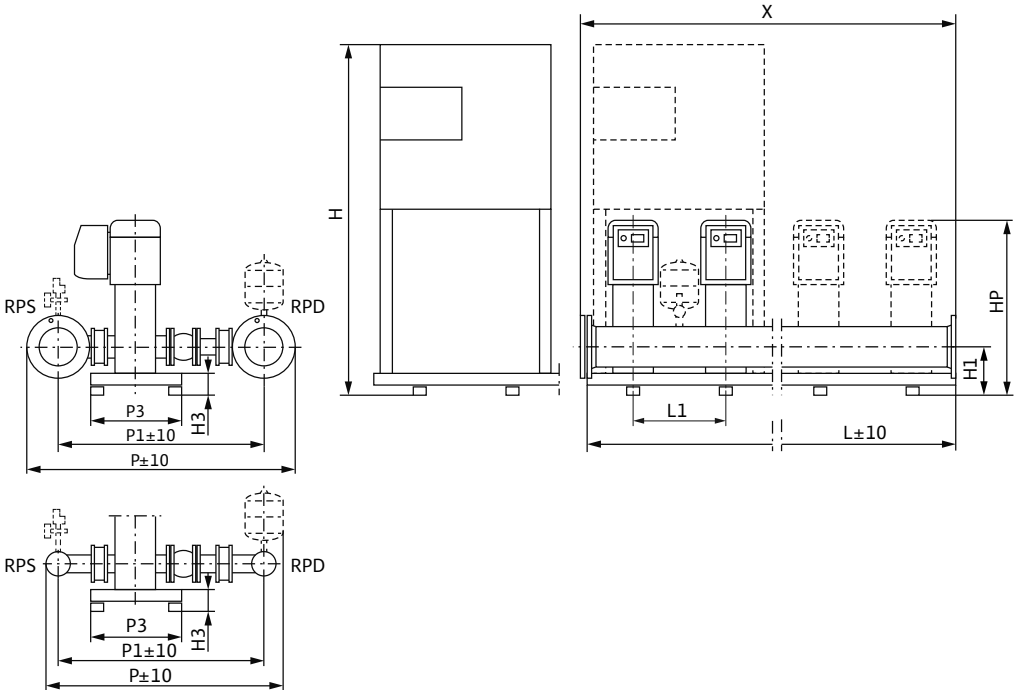

Sample systems are shown. Switchbox position depends on pump height.
Accessories (to be ordered separately): Optional WMS low-water cut-out switchgear kit
Installation surface: flat and horizontal
Installation location: dry, well ventilated and frost-proof

Dimensions, weights

Wilo-Comfort-Vario COR-2-4...	Nominal diameters of the pipe connections on suction side	Nominal diameters of pipe connections on the pressure side	Dimensions										Weight approx.
	RPS	*RPD*	*H*	*H1*	*H3*	*HP*	*L*	*L1*	*P*	*P1*	*P3*	*X*	*m*
			mm										kg
COR-2 Helix VE 2205/K/VR	R 3	R 3	1772	215	125	1421	1580	500	1147	1000	500	1000	535
COR-3 Helix VE 2205/K/VR	DN 100	DN 100	1772	215	125	1421	2080	500	1245	1025	500	1500	797
COR-4 Helix VE 2205/K/VR	DN 125	DN 125	1705	215	125	1421	2580	500	1300	1050	500	2000	1065

Technical data Wilo-Comfort-Vario COR Helix VE.../VR

Pump curves

Wilo-Comfort-Vario COR -2 - COR-4 Helix VE 3602/VR

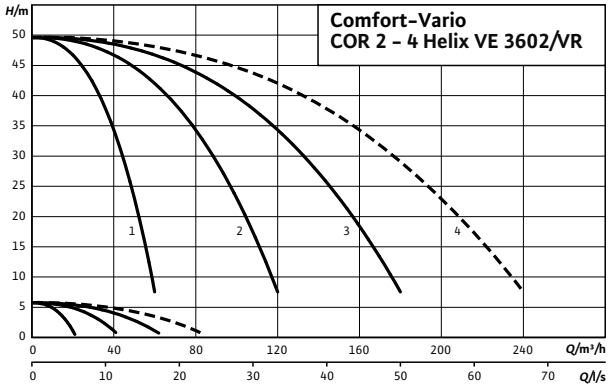

---- including standby pump

Motor data per pump					
Wilo-Comfort-Vario COR-2-4...	**Nominal motor power**	**Nominal current 3~400 V, 50 Hz**	**Motor efficiency**		
	P_2	I_N	$\eta_{m\ 50\%}$	$\eta_{m\ 75\%}$	$\eta_{m\ 100\%}$
	kW	A	%		
Helix VE 3602/K-5.5/VR	5.5	11	87.4	88.5	88.5

Motor efficiency based on 400 V, 50 Hz

Technical data Wilo-Comfort-Vario COR Helix VE.../VR

Dimension drawing

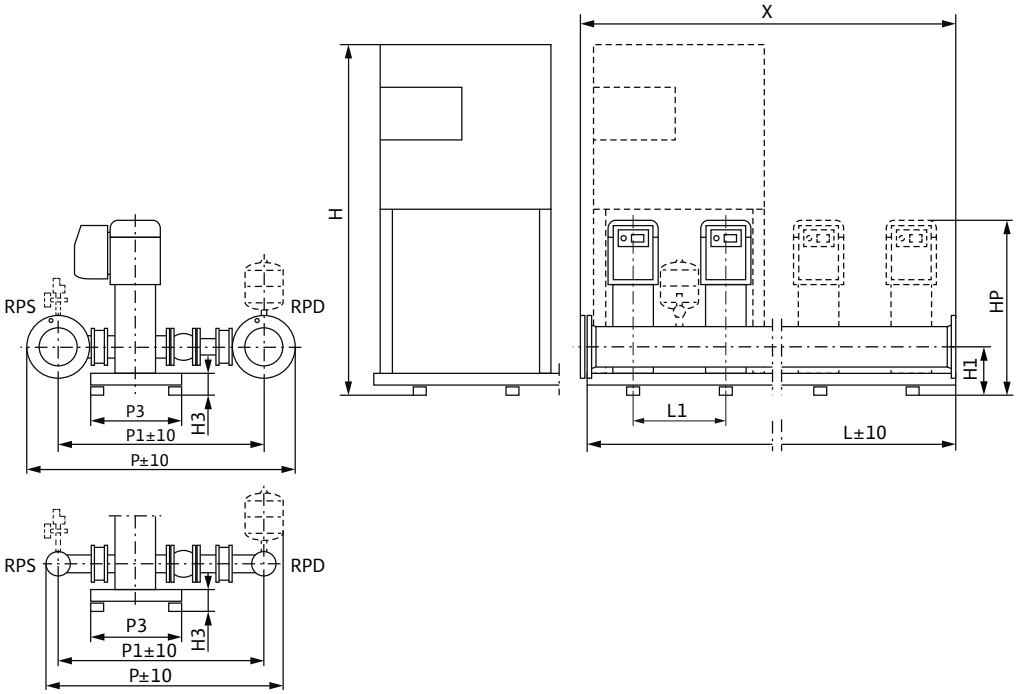

Sample systems are shown. Switchbox position depends on pump height.
Accessories (to be ordered separately): Optional WMS low-water cut-out switchgear kit
Installation surface: flat and horizontal
Installation location: dry, well ventilated and frost-proof

Dimensions, weights

Wilo-Comfort-Vario COR-2-4...	Nominal diameters of the pipe connections on suction side	Nominal diameters of pipe connections on the pressure side	Dimensions										Weight approx.
	RPS	*RPD*	*H*	*H1*	*H3*	*HP*	*L*	*L1*	*P*	*P1*	*P3*	*X*	*m*
			mm										kg
COR-2 Helix VE 3602/K-5.5/VR	DN 100	DN 100	1405	227	122	1217	1580	500	1250	1030	500	1000	421
COR-3 Helix VE 3602/K-5.5/VR	DN 125	DN 125	1335	227	122	1217	2080	500	1307	1057	500	1500	616
COR-4 Helix VE 3602/K-5.5/VR	DN 150	DN 150	1335	227	122	1217	2580	500	1369	1084	500	2000	821

Technical data Wilo-Comfort-Vario COR Helix VE.../VR

Pump curves

Wilo-Comfort-Vario COR -2 - COR-4 Helix VE 3604/VR

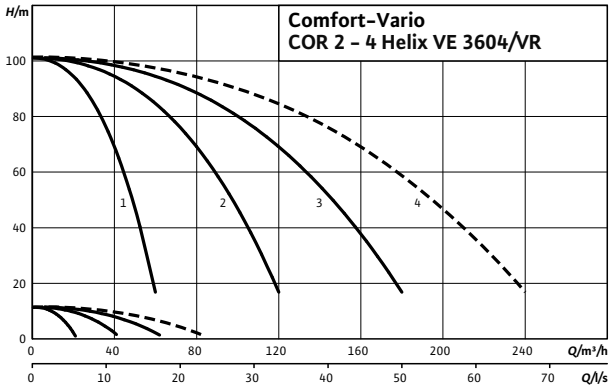

---- including standby pump

Motor data per pump					
Wilo-Comfort-Vario COR-2-4...	**Nominal motor power**	**Nominal current 3~400 V, 50 Hz**	**Motor efficiency**		
	P_2	I_N	$\eta_{m\ 50\%}$	$\eta_{m\ 75\%}$	$\eta_{m\ 100\%}$
	kW	A	%		
Helix VE 3604/K/VR	11	21.2	88.8	90.2	90.5

Motor efficiency based on 400 V, 50 Hz

Technical data Wilo-Comfort-Vario COR Helix VE.../VR

Dimension drawing

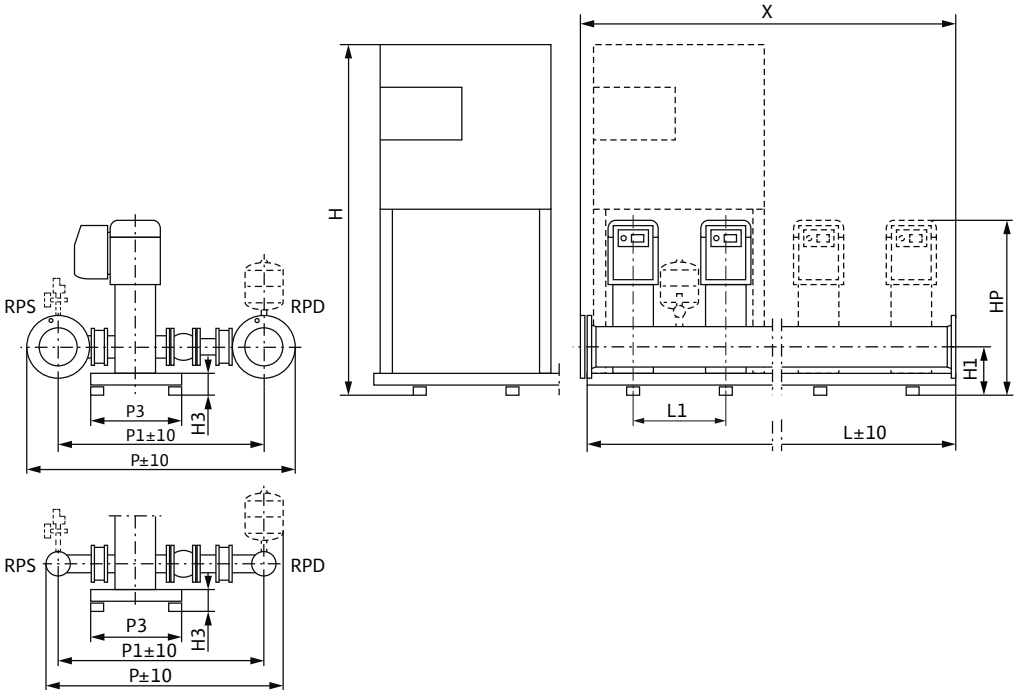

Sample systems are shown. Switchbox position depends on pump height.
Accessories (to be ordered separately): Optional WMS low-water cut-out switchgear kit
Installation surface: flat and horizontal
Installation location: dry, well ventilated and frost-proof

Dimensions, weights

Wilo-Comfort-Vario COR-2-4...	Nominal diameters of the pipe connections on suction side	Nominal diameters of pipe connections on the pressure side	Dimensions										Weight approx.
	RPS	*RPD*	*H*	*H1*	*H3*	*HP*	*L*	*L1*	*P*	*P1*	*P3*	*X*	*m*
			mm										kg
COR-2 Helix VE 3604/K/VR	DN 100	DN 100	1772	227	122	1450	1580	500	1250	1030	500	1000	613
COR-3 Helix VE 3604/K/VR	DN 125	DN 125	1772	227	122	1450	2080	500	1307	1057	500	1500	896
COR-4 Helix VE 3604/K/VR	DN 150	DN 150	1705	227	122	1450	2580	500	1369	1084	500	2000	1206

Technical data Wilo-Comfort-Vario COR Helix VE.../VR

Pump curves

Wilo-Comfort-Vario COR -2 - COR-4 Helix VE 3605/VR

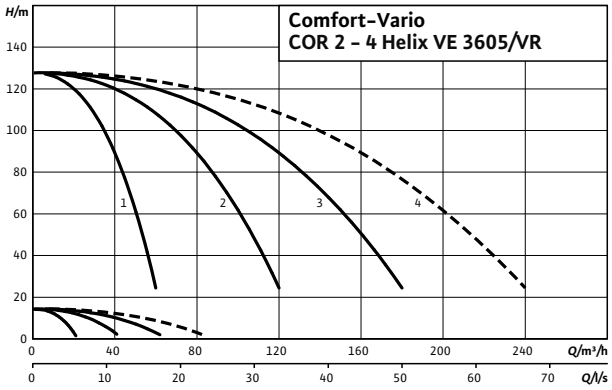

---- including standby pump

Motor data per pump					
Wilo-Comfort-Vario COR-2-4...	**Nominal motor power**	**Nominal current 3~400 V, 50 Hz**	**Motor efficiency**		
	P_2	I_N	$\eta_{m\ 50\%}$	$\eta_{m\ 75\%}$	$\eta_{m\ 100\%}$
	kW	A	%		
Helix VE 3605/K/VR	15	25.4	87.0	89.7	90.6

Motor efficiency based on 400 V, 50 Hz

Technical data Wilo-Comfort-Vario COR Helix VE.../VR

Dimension drawing

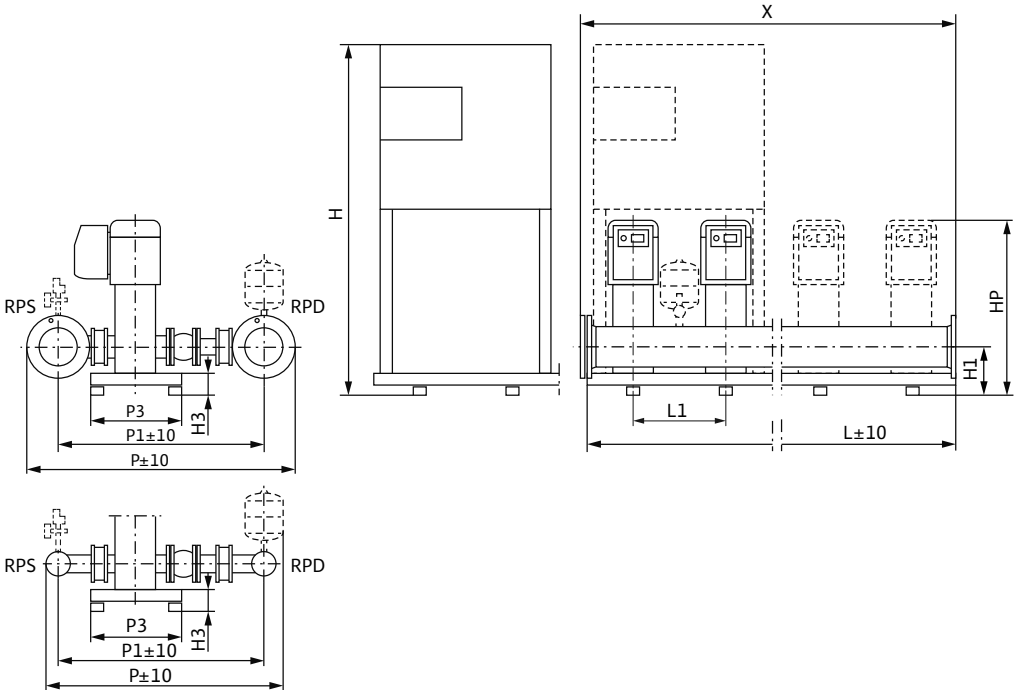

Sample systems are shown. Switchbox position depends on pump height.
Accessories (to be ordered separately): Optional WMS low-water cut-out switchgear kit
Installation surface: flat and horizontal
Installation location: dry, well ventilated and frost-proof

Dimensions, weights

Wilo-Comfort-Vario COR-2-4...	Nominal diameters of the pipe connections on suction side	Nominal diameters of pipe connections on the pressure side	Dimensions										Weight approx.
	RPS	*RPD*	*H*	*H1*	*H3*	*HP*	*L*	*L1*	*P*	*P1*	*P3*	*X*	*m*
			mm										kg
COR-2 Helix VE 3605/K/VR	DN 100	DN 100	1772	227	122	1528	1580	500	1250	1030	500	1000	677
COR-3 Helix VE 3605/K/VR	DN 125	DN 125	1705	227	122	1528	2080	500	1307	1057	500	1500	1007
COR-4 Helix VE 3605/K/VR	DN 150	DN 150	1705	227	122	1528	2580	500	1369	1084	500	2000	1334

Technical data Wilo-Comfort-Vario COR Helix VE.../VR

Pump curves

Wilo-Comfort-Vario COR -2 - COR-4 Helix VE 5202/VR

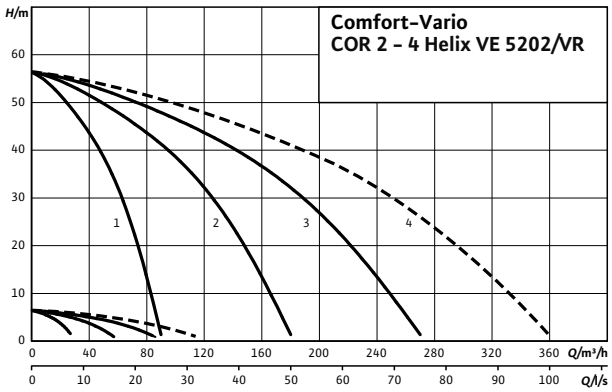

---- including standby pump

Motor data per pump					
Wilo-Comfort-Vario COR-2-4...	**Nominal motor power**	**Nominal current 3~400 V, 50 Hz**	**Motor efficiency**		
	P_2	I_N	$\eta_{m\ 50\%}$	$\eta_{m\ 75\%}$	$\eta_{m\ 100\%}$
	kW	A	%		
Helix VE 5202/K/VR	7.5	14.3	88.4	89.5	89.5

Motor efficiency based on 400 V, 50 Hz

Technical data Wilo-Comfort-Vario COR Helix VE.../VR

Dimension drawing

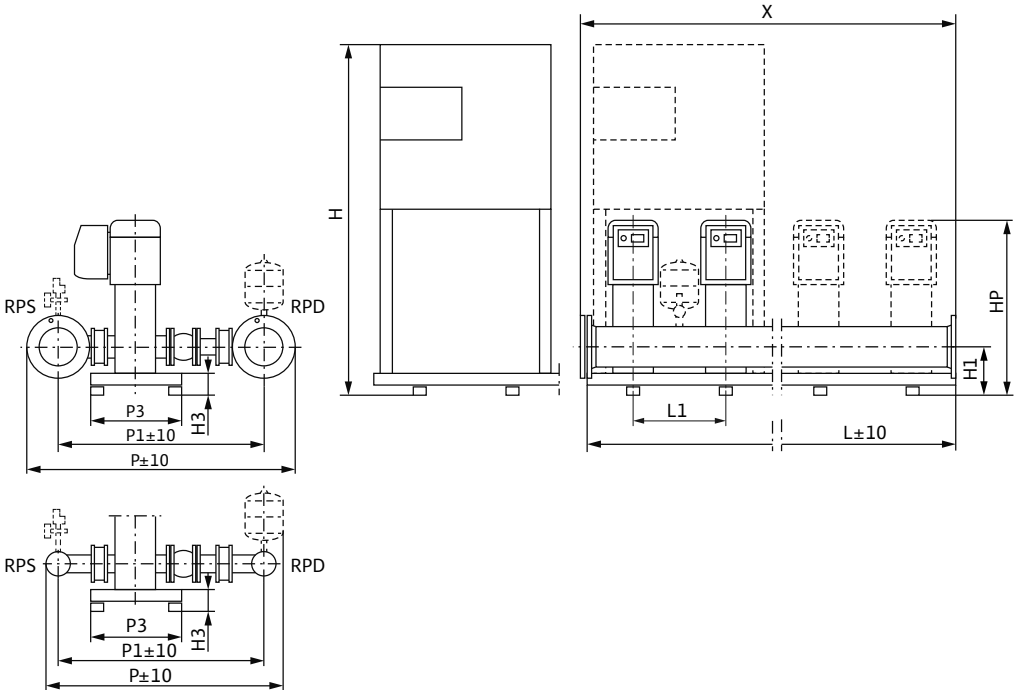

Sample systems are shown. Switchbox position depends on pump height.
Accessories (to be ordered separately): Optional WMS low-water cut-out switchgear kit
Installation surface: flat and horizontal
Installation location: dry, well ventilated and frost-proof

Dimensions, weights

Wilo-Comfort-Vario COR-2-4...	Nominal diameters of the pipe connections on suction side	Nominal diameters of pipe connections on the pressure side	Dimensions										Weight approx.
	RPS	*RPD*	*H*	*H1*	*H3*	*HP*	*L*	*L1*	*P*	*P1*	*P3*	*X*	*m*
			mm										kg
COR-2 Helix VE 5202/K/VR	DN 125	DN 125	1405	262	122	1285	1580	500	1286	1036	500	1000	514
COR-3 Helix VE 5202/K/VR	DN 150	DN 150	1335	262	122	1285	2080	500	1351	1066	500	1500	750
COR-4 Helix VE 5202/K/VR	DN 200	DN 200	1335	262	122	1285	2580	500	1456	1116	500	2000	999

Technical data Wilo-Comfort-Vario COR Helix VE.../VR

Pump curves

Wilo-Comfort-Vario COR -2 - COR-4 Helix VE 5203/VR

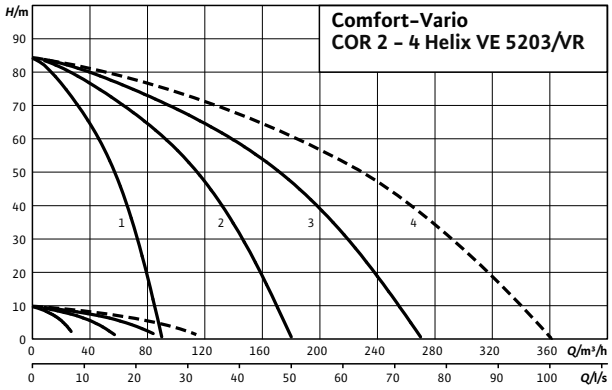

---- including standby pump

Motor data per pump					
Wilo-Comfort-Vario COR-2-4...	**Nominal motor power**	**Nominal current 3~400 V, 50 Hz**	**Motor efficiency**		
	P_2	I_N	$\eta_{m\ 50\%}$	$\eta_{m\ 75\%}$	$\eta_{m\ 100\%}$
	kW	A	%		
Helix VE 5203/K/VR	11	21.2	88.8	90.2	90.5

Motor efficiency based on 400 V, 50 Hz

Technical data Wilo-Comfort-Vario COR Helix VE.../VR

Dimension drawing

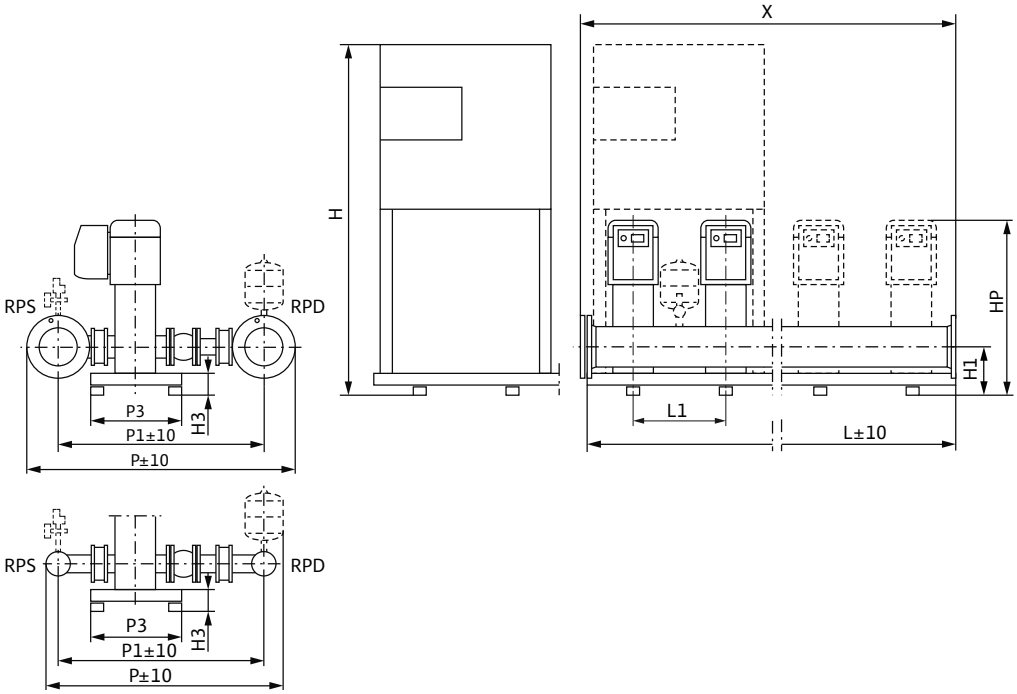

Sample systems are shown. Switchbox position depends on pump height.
Accessories (to be ordered separately): Optional WMS low-water cut-out switchgear kit
Installation surface: flat and horizontal
Installation location: dry, well ventilated and frost-proof

Dimensions, weights

Wilo-Comfort-Vario COR-2-4...	Nominal diameters of the pipe connections on suction side	Nominal diameters of pipe connections on the pressure side	Dimensions										Weight approx.
	RPS	*RPD*	*H*	*H1*	*H3*	*HP*	*L*	*L1*	*P*	*P1*	*P3*	*X*	*m*
			mm										kg
COR-2 Helix VE 5203/K/VR	DN 125	DN 125	1772	262	122	1485	1580	500	1286	1036	500	1000	730
COR-3 Helix VE 5203/K/VR	DN 150	DN 150	1772	262	122	1485	2080	500	1351	1066	500	1500	1064
COR-4 Helix VE 5203/K/VR	DN 200	DN 200	1705	262	122	1485	2580	500	1456	1116	500	2000	1429

Technical data Wilo-Comfort-Vario COR Helix VE.../VR

Pump curves

Wilo-Comfort-Vario COR -2 - COR-4 Helix VE 5204/VR

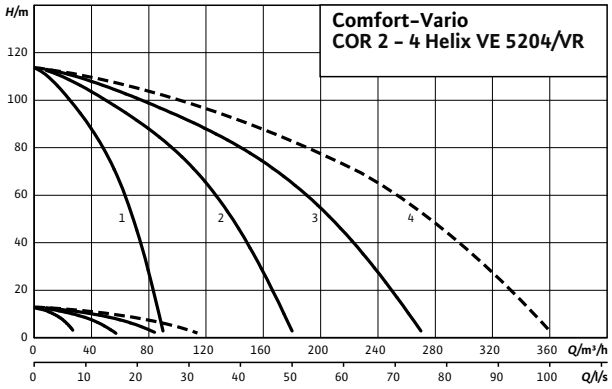

---- including standby pump

Motor data per pump					
Wilo-Comfort-Vario COR-2-4...	**Nominal motor power**	**Nominal current 3~400 V, 50 Hz**	**Motor efficiency**		
	P_2	I_N	$\eta_{m\ 50\%}$	$\eta_{m\ 75\%}$	$\eta_{m\ 100\%}$
	kW	A	%		
Helix VE 5204/K/VR	15	25.4	87.0	89.7	90.6

Motor efficiency based on 400 V, 50 Hz

Technical data Wilo-Comfort-Vario COR Helix VE.../VR

Dimension drawing

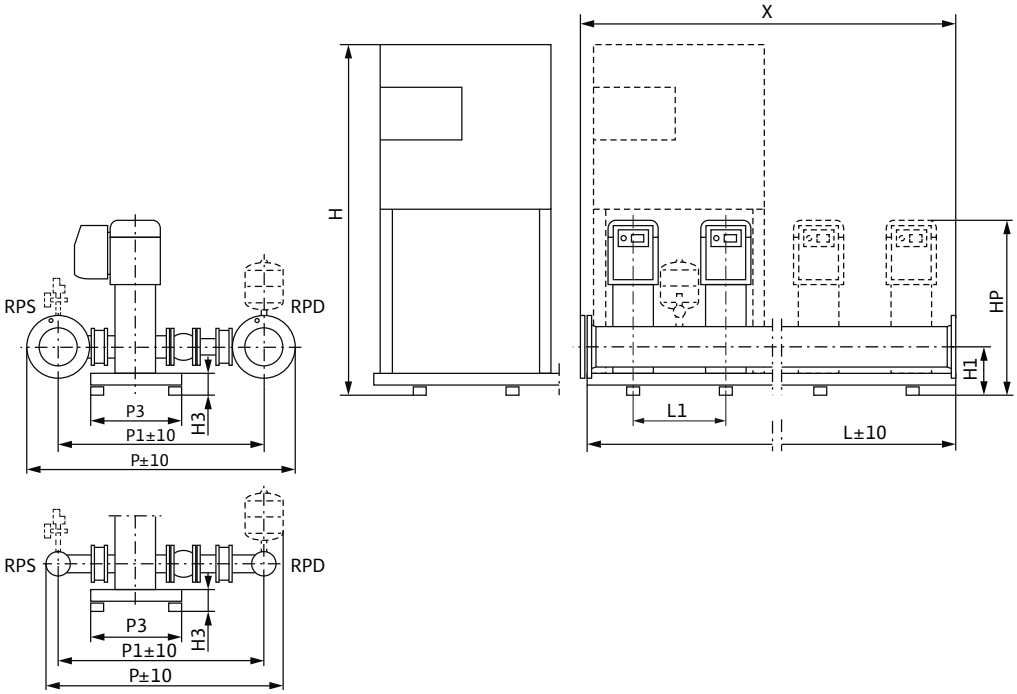

Sample systems are shown. Switchbox position depends on pump height.
Accessories (to be ordered separately): Optional WMS low-water cut-out switchgear kit
Installation surface: flat and horizontal
Installation location: dry, well ventilated and frost-proof

Dimensions, weights

Wilo-Comfort-Vario COR-2-4...	Nominal diameters of the pipe connections on suction side	Nominal diameters of pipe connections on the pressure side	Dimensions										Weight approx.
	RPS	*RPD*	*H*	*H1*	*H3*	*HP*	*L*	*L1*	*P*	*P1*	*P3*	*X*	*m*
			mm										kg
COR-2 Helix VE 5204/K/VR	DN 125	DN 125	1772	262	122	1596	1580	500	1286	1036	500	1000	747
COR-3 Helix VE 5204/K/VR	DN 150	DN 150	1705	262	122	1596	2080	500	1351	1066	500	1500	1105
COR-4 Helix VE 5204/K/VR	DN 200	DN 200	1705	262	122	1596	2580	500	1456	1116	500	2000	1464

Technical data Wilo-Comfort-Vario COR Helix VE.../VR

Pump curves

Wilo-Comfort-Vario COR -2 - COR-4 Helix VE 5205/VR

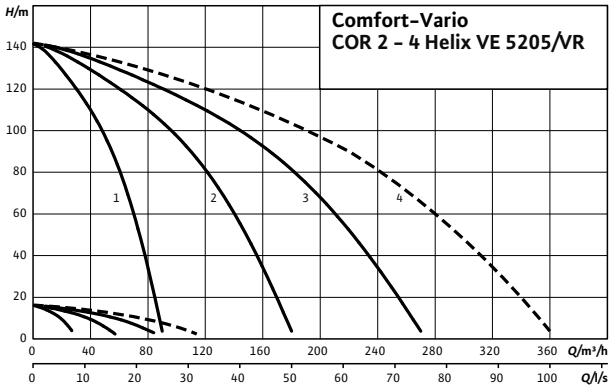

---- including standby pump

Motor data per pump					
Wilo-Comfort-Vario COR-2-4...	**Nominal motor power**	**Nominal current 3~400 V, 50 Hz**	**Motor efficiency**		
	P_2	I_N	$\eta_{m\ 50\%}$	$\eta_{m\ 75\%}$	$\eta_{m\ 100\%}$
	kW	A	%		
Helix VE 5205/K/VR	18.5	33.6	89.4	90.6	91.1

Motor efficiency based on 400 V, 50 Hz

Technical data Wilo-Comfort-Vario COR Helix VE.../VR

Dimension drawing

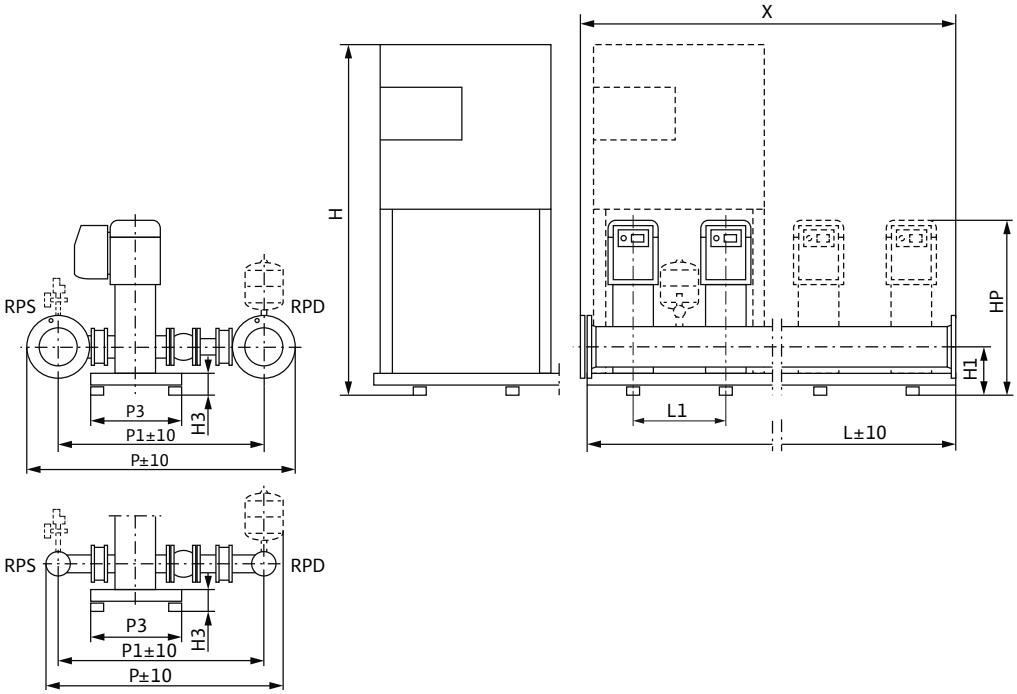

Sample systems are shown. Switchbox position depends on pump height.
Accessories (to be ordered separately): Optional WMS low-water cut-out switchgear kit
Installation surface: flat and horizontal
Installation location: dry, well ventilated and frost-proof

Dimensions, weights

Wilo-Comfort-Vario COR-2-4...	Nominal diameters of the pipe connections on suction side	Nominal diameters of pipe connections on the pressure side	Dimensions										Weight approx.
	RPS	*RPD*	*H*	*H1*	*H3*	*HP*	*L*	*L1*	*P*	*P1*	*P3*	*X*	*m*
			mm										kg
COR-2 Helix VE 5205/K/VR	DN 125	DN 125	1772	262	122	1734	1580	500	1286	1036	500	1000	830
COR-3 Helix VE 5205/K/VR	DN 150	DN 150	1705	262	122	1734	2080	500	1351	1066	500	1500	1230
COR-4 Helix VE 5205/K/VR	DN 200	DN 200	1705	262	122	1734	2580	500	1456	1116	500	2000	1631

Pressure boosting

Multi-pump systems, speed-controlled

Series description Wilo-Comfort-Vario COR MVIE.../VR

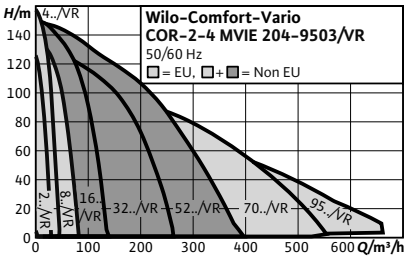

Design

Pressure boosting system with 2 to 4 non-self-priming stainless steel high-pressure multistage centrifugal pumps switched in parallel with speed-controlled motors and Vario controller VR

Type key

Example:	**Wilo-COR-3 MVIE 406/VR**
COR	Compact pressure boosting system with integrated speed control
3	Number of pumps
MVIE	Pump series
4	Rated volume flow [m^3/h] of the single pump
06	Number of single-pump stages
VR	Control unit; VR = Vario controller

Application

- Fully automatic water supply and pressure boosting in residential, commercial and public buildings, hotels, hospitals, department stores and industrial systems.
- Pumping of potable water and process water, cooling water, fire water (except for fire extinguishing systems in accordance with DIN14462) or other service waters that do not attack the materials used, neither chemically nor mechanically, and do not contain any abrasive or long-fibre constituents

Special features/product advantages

- Heavy-duty system due to MVIE series stainless steel high-pressure multistage centrifugal pumps with air-cooled integrated frequency converters
- IEC three-phase motors (Level IE2), from 0.75 kW, 2-pole
- Superproportionally large control range
- Integrated dry-running detection with automatic deactivation in the event of low water via performance characteristics of the motor control electronics

Technical data

- Mains connection 3~400 V ± 10 %, 50 Hz; 3~380 V ±10 %, 60 Hz, depending on type also 1~230 V, 50/60 Hz (other versions on request)
- Max. fluid temperature 50 °C (70 °C optional)
- Max. ambient temperature 40 °C
- Operating pressure 16 bar
- Inlet pressure 10 bar
- Nominal connection diameters on discharge side R 2" - DN 250
- Nominal connection diameters on inlet side R 2" - DN 250
- Speed range 1200- 3770 rpm
- Protection class IP 54 (VR control device)
- Fuse protection on mains side A, AC 3 according to motor power and EVU regulations
- Approved fluids (other fluids on request):
  - Cooling water
  - Potable and process water
  - Fire water
- Note on fluids: Approved fluids are generally waters which do not attack the materials used, neither chemically nor mechanically, and do not contain any abrasive or long-fibre constituents.

Equipment/function

- 2-4 pumps of the MVIE series per system with infinitely variable control mode via integrated frequency converter
- Components that come in contact with fluid are corrosion-resistant
- Galvanised base frame with height-adjustable vibration absorber for insulation against structure-borne noise
- Check valve at each pump, on the suction and pressure side
- Non-return valve, on the pressure side
- Diaphragm pressure vessel 8 l, PN16, pressure side
- Pressure sensor, discharge side
- Optional pressure gauge, suction side
- Pressure gauge, discharge side
- Optional low-water cut-out switchgear

Materials

MVIE 2.. to 16..-6

- Impellers and stage chambers made of 1.4301/1.4404 stainless steel (MVI 16..-6 only in 1.4301)
- Pump housing stainless steel 1.4301 / 1.4404
- Shaft 1.4301 / 1.4404 stainless steel
- Seal EPDM (EP 851) / FKM (Viton)
- Housing cover stainless steel 1.4301 / 1.4404
- Lower housing section 1.4301 / 1.4404 stainless steel
- Mechanical seal B-carbon/tungsten carbide, SiC/carbon
- Pressure shroud 1.4301 / 1.4404 stainless steel
- Bearing, tungsten carbide

Starting with MVIE 16..

- Impellers stainless steel 1.4301/1.4404
- Stage chambers stainless steel 1.4301/1.4404
- Pump housing EN-GJL-250 / 1.4404

Series description Wilo-Comfort-Vario COR MVIE.../VR

- Shaft 1.4057 / 1.4404 stainless steel
- Seal EPDM (EP 851) / FKM (Viton)
- Housing cover stainless steel 1.4301 / 1.4404
- Lower housing section 1.4301 / 1.4404 stainless steel
- Mechanical seal B-carbon/tungsten carbide, SiC/carbon
- Pressure shroud 1.4301 / 1.4404 stainless steel
- Bearing, tungsten carbide

Description/design

- Base frame: galvanised and provided with height-adjustable vibration absorbers for comprehensive insulation against structure-borne noise; other versions on request
- Pipework: complete pipework made of stainless steel, suitable for the connection of all piping materials used in building services; the pipework is dimensioned according to the overall hydraulic performance of the pressure boosting system
- Pumps: 2 to 4 pumps from the MVIE 4.., 8.. and MVIE 16.. series switched in parallel are used; adapted air-cooled frequency converters on the pump motor enable continuous auto control for all pumps of these series; all pump components in contact with fluid are made of stainless steel
- Valves: each pump is fitted on the suction and pressure side with a check valve with DVGW approval mark or annular shut-off valves and a pressure-side DVGW-approved non-return valve
- Diaphragm pressure vessel: 8 l/PN 16 located on the discharge side with a butyl rubber diaphragm, completely safe in accordance with food safety laws; for testing and inspection purposes, with shut-off ball cock, with drain and throughflow fitting according to DIN 4807
- Pressure sensor: 4 to 20 mA, located on the discharge side for activating the central Comfort-Vario-Controller
- Pressure display: On pressure side via pressure gauge and additionally on the alphanumeric LCD screen of the VR Vario control device. Optional pressure display for suction side via pressure gauge.
- Controller: the system is standard-equipped with a VR Vario controller

Scope of delivery

- Factory-mounted, connection-ready pressure boosting system checked for functionality and impermeability
- Packaging
- Installation and operating instructions

Note

Pressure boosting systems with other sizes of the installed pumps (MVIE 16..-6, MVIE 16, MVIE 32 and MVIE 52) are offered only outside the EU member states. Information on these products is available **on request**.

Electrical connection

3~400 V

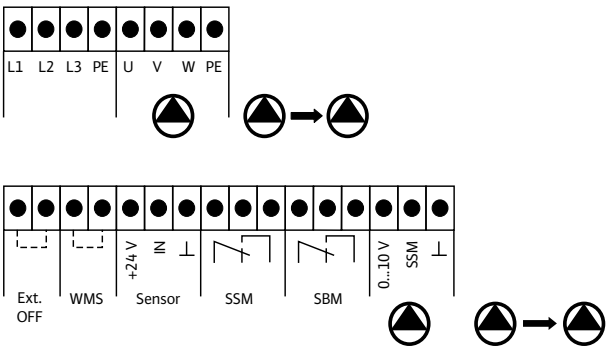

Electrical connection

1~230 V

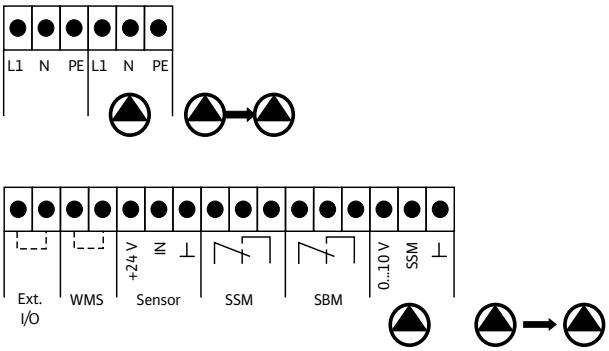

Technical data Wilo-Comfort-Vario COR MVIE.../VR

Pump curves

Wilo-Comfort-Vario COR-2 - COR-4 MVIE 204 EM/VR

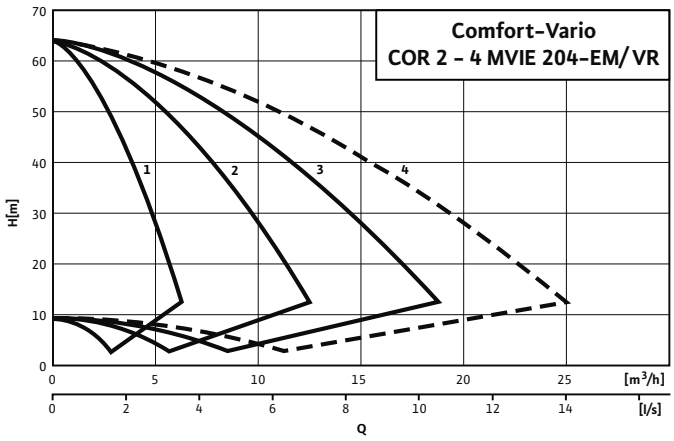

---- including standby pump

Note:
Potable water installations according to DIN 1988, part 5 must include a standby pump.

Selection with standby pump according to duty chart:

1 2-pump system
2 3-pump system
3 4-pump system
4 Select system with next largest pump

If a standby pump is not necessary, the duty chart number corresponds to the number of pumps needed to achieve the calculated maximum system output.

Motor data per pump		
Wilo-Comfort-Vario COR-2-4...	**Nominal motor power**	**Nominal current 1~230 V, 50 Hz**
	P_2	I_N
	kW	A
MVIE 204EM/VR	1.1	12.4

Technical data Wilo-Comfort-Vario COR MVIE.../VR

Dimension drawing

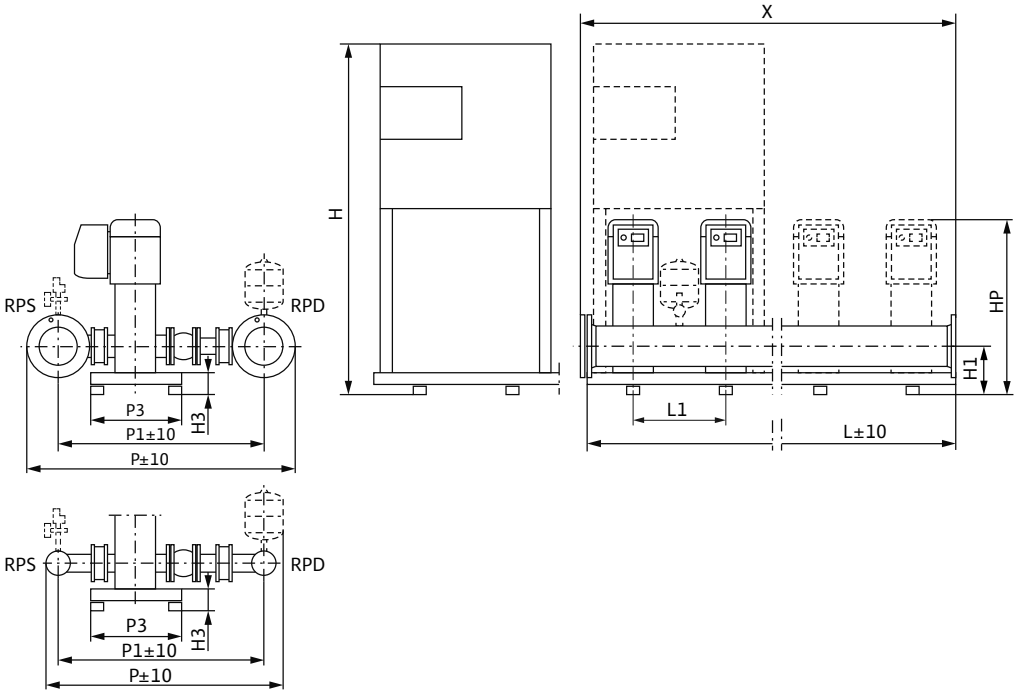

Sample systems are shown. Switchbox position depends on pump height.
Accessories (to be ordered separately): Optional WMS low-water cut-out switchgear kit
Installation surface: flat and horizontal
Installation location: dry, well ventilated and frost-proof

Dimensions, weights

Wilo-Comfort-Vario COR-2-4...	Nominal diameters of the pipe connections on suction side	Nominal diameters of pipe connections on the pressure side	Dimensions										Weight approx.
	RPS	*RPD*	*H*	*H1*	*H3*	*HP*	*L*	*L1*	*P*	*P1*	*P3*	*X*	*m*
			mm										kg
2MVIE 204EM/VR	R 2	R 2	1375	140	90	688	600	300	750	613	300	600	91
3MVIE 204EM/VR	R 2	R 2	1375	140	90	688	900	300	750	613	300	900	130
4MVIE 204EM/VR	R 2	R 2	1375	140	90	688	1200	300	750	613	300	1200	169

Technical data Wilo-Comfort-Vario COR MVIE.../VR

Pump curves

Wilo-Comfort-Vario COR-2 - COR-4 MVIE 403 EM/VR

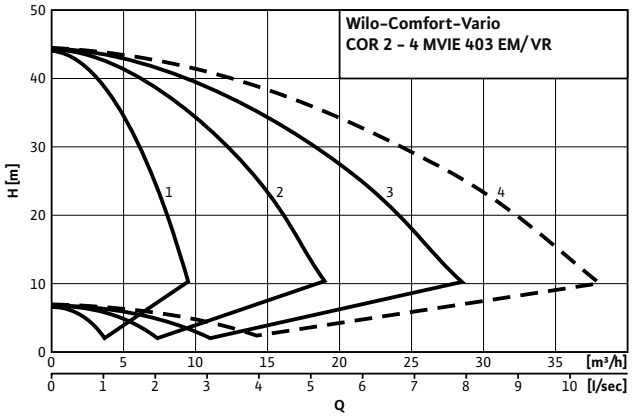

---- including standby pump

Note:
Potable water installations according to DIN 1988, part 5 must include a standby pump.

Selection with standby pump according to duty chart:

1 2-pump system
2 3-pump system
3 4-pump system
4 Select system with next largest pump

If a standby pump is not necessary, the duty chart number corresponds to the number of pumps needed to achieve the calculated maximum system output.

Motor data per pump

Wilo-Comfort-Vario COR-2-4...	Nominal motor power	Nominal current 1~230 V, 50 Hz
	P_2	I_N
	kW	A
MVIE 403EM/VR	1.1	12.4

Technical data Wilo-Comfort-Vario COR MVIE.../VR

Dimension drawing

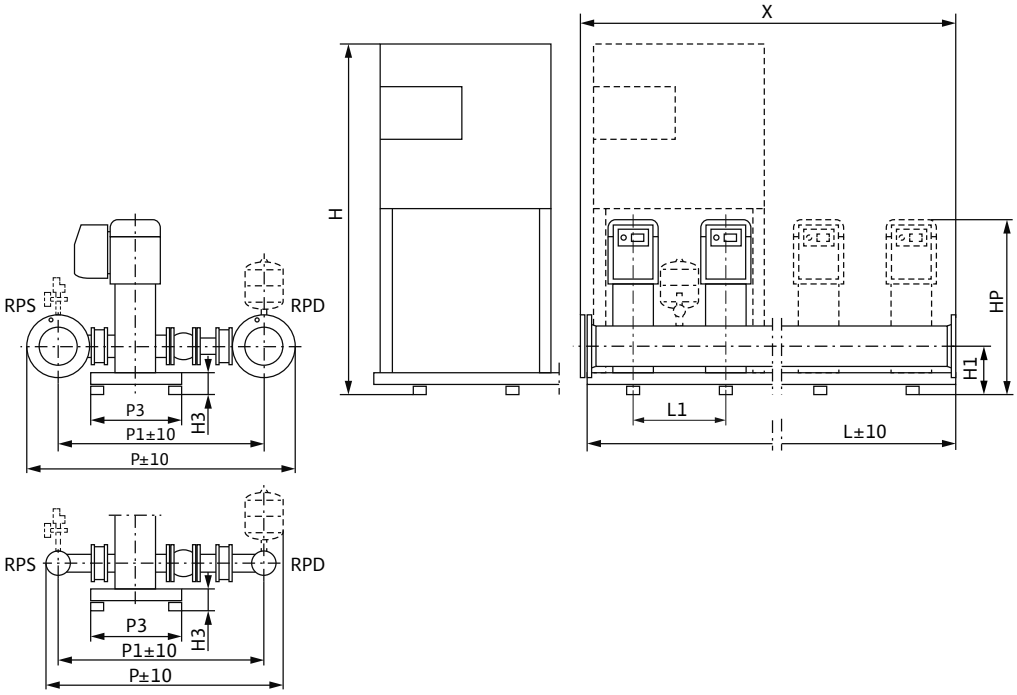

Sample systems are shown. Switchbox position depends on pump height.
Accessories (to be ordered separately): Optional WMS low-water cut-out switchgear kit
Installation surface: flat and horizontal
Installation location: dry, well ventilated and frost-proof

Dimensions, weights

Wilo-Comfort-Vario COR-2-4...	Nominal diameters of the pipe connections on suction side	Nominal diameters of pipe connections on the pressure side	Dimensions										Weight approx.
	RPS	*RPD*	*H*	*H1*	*H3*	*HP*	*L*	*L1*	*P*	*P1*	*P3*	*X*	*m*
			mm										kg
2MVIE 403EM/VR	R 2	R 2	1375	140	90	664	600	300	750	613	300	600	91
3MVIE 403EM/VR	R 2	R 2	1375	140	90	664	900	300	750	613	300	900	130
4MVIE 403EM/VR	R 2½	R 2½	1375	140	90	664	1200	300	782	613	300	1200	169

Technical data Wilo-Comfort-Vario COR MVIE.../VR

Pump curves

Wilo-Comfort-Vario COR-2 - COR-4 MVIE 204/VR

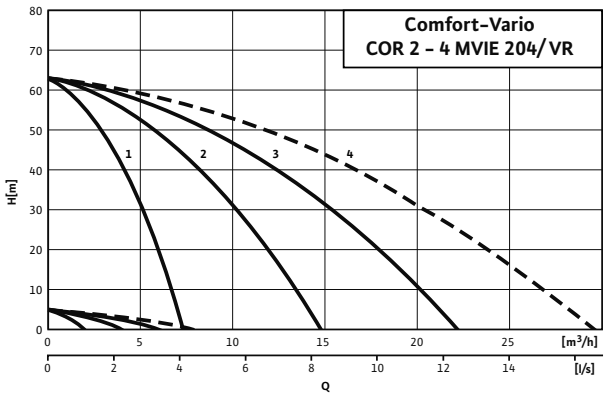

---- including standby pump

Note:
Potable water installations according to DIN 1988, part 5 must include a standby pump.

Selection with standby pump according to duty chart:

1 2-pump system
2 3-pump system
3 4-pump system
4 Select system with next largest pump

If a standby pump is not necessary, the duty chart number corresponds to the number of pumps needed to achieve the calculated maximum system output.

Motor data per pump

Wilo-Comfort-Vario COR-2-4...	Nominal motor power	Nominal current 3~400 V, 50 Hz	Motor efficiency		
	P_2	I_N	$\eta_{m\ 50\%}$	$\eta_{m\ 75\%}$	$\eta_{m\ 100\%}$
	kW	A	%		
MVIE 204/VR	1.1	3.3	79.0	82.0	82.5

Motor efficiency based on 400 V, 50 Hz

Technical data Wilo-Comfort-Vario COR MVIE.../VR

Dimension drawing

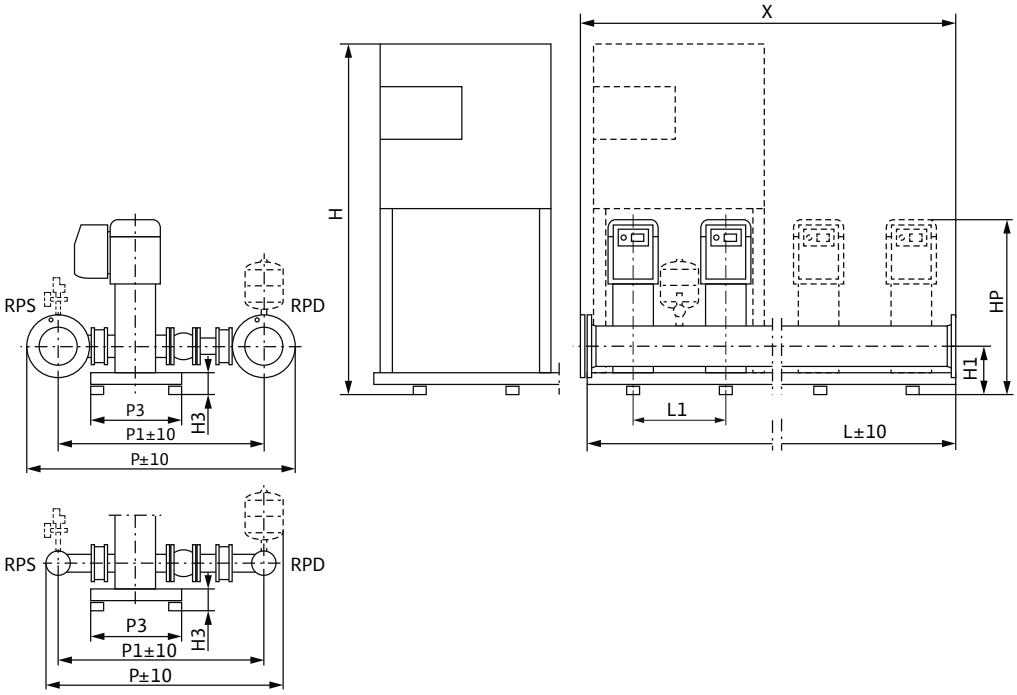

Sample systems are shown. Switchbox position depends on pump height.
Accessories (to be ordered separately): Optional WMS low-water cut-out switchgear kit
Installation surface: flat and horizontal
Installation location: dry, well ventilated and frost-proof

Dimensions, weights

Wilo-Comfort-Vario COR-2-4...	Nominal diameters of the pipe connections on suction side	Nominal diameters of pipe connections on the pressure side	Dimensions										Weight approx.
	RPS	*RPD*	*H*	*H1*	*H3*	*HP*	*L*	*L1*	*P*	*P1*	*P3*	*X*	*m*
			mm										kg
2MVIE 204/VR	R 2	R 2	1375	140	90	690	600	300	750	613	300	600	96
3MVIE 204/VR	R 2	R 2	1375	140	90	690	900	300	750	613	300	900	124
4MVIE 204/VR	R 2	R 2	1375	140	90	690	1200	300	750	613	300	1200	160

Technical data Wilo-Comfort-Vario COR MVIE.../VR

Pump curves

Wilo-Comfort-Vario COR-2 - COR-4 MVIE 208/VR

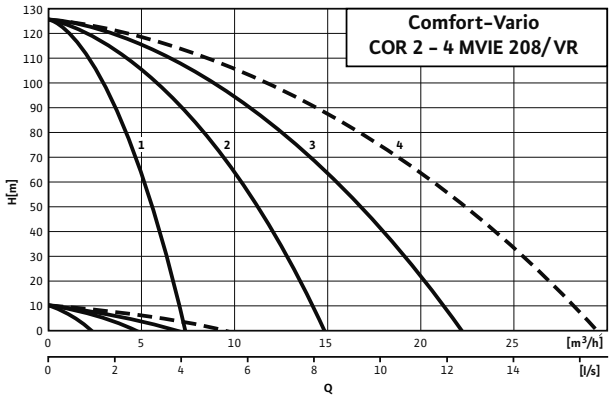

---- including standby pump

Note:
Potable water installations according to DIN 1988, part 5 must include a standby pump.

Selection with standby pump according to duty chart:

1 2-pump system
2 3-pump system
3 4-pump system
4 Select system with next largest pump

If a standby pump is not necessary, the duty chart number corresponds to the number of pumps needed to achieve the calculated maximum system output.

Motor data per pump

Wilo-Comfort-Vario COR-2-4...	Nominal motor power	Nominal current 3~400 V, 50 Hz	Motor efficiency		
	P_2	I_N	$\eta_{m\ 50\%}$	$\eta_{m\ 75\%}$	$\eta_{m\ 100\%}$
	kW	A	%		
MVIE 208/VR	2.2	5.6	81.0	84.0	85.5

Motor efficiency based on 400 V, 50 Hz

Technical data Wilo-Comfort-Vario COR MVIE.../VR

Dimension drawing

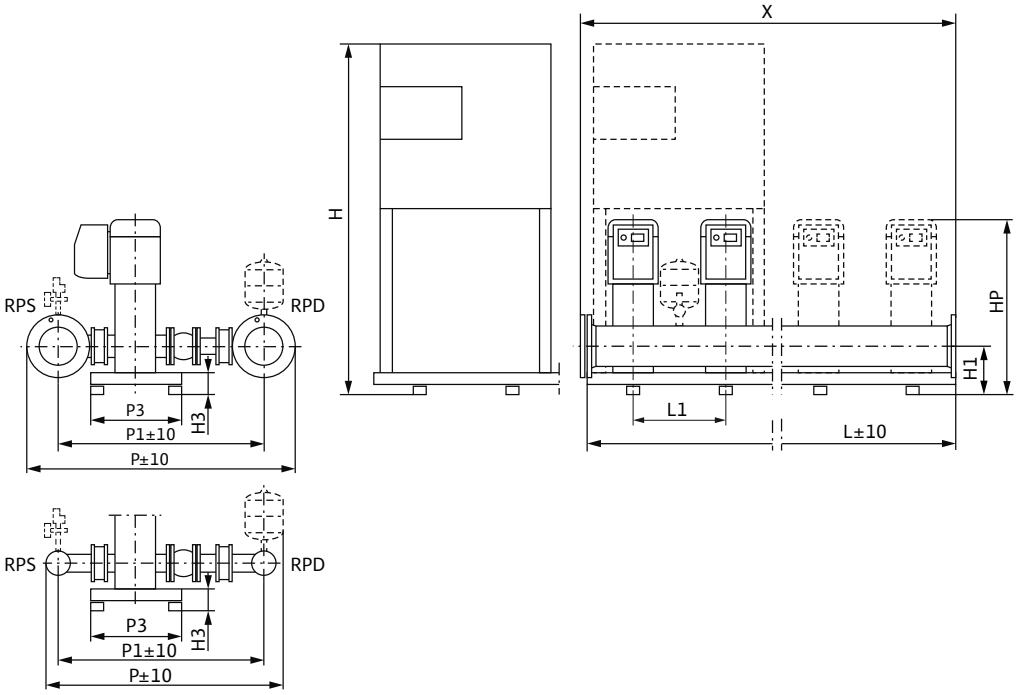

Sample systems are shown. Switchbox position depends on pump height.
Accessories (to be ordered separately): Optional WMS low-water cut-out switchgear kit
Installation surface: flat and horizontal
Installation location: dry, well ventilated and frost-proof

Dimensions, weights

Wilo-Comfort-Vario COR-2-4...	Nominal diameters of the pipe connections on suction side	Nominal diameters of pipe connections on the pressure side	Dimensions										Weight approx.
	RPS	*RPD*	*H*	*H1*	*H3*	*HP*	*L*	*L1*	*P*	*P1*	*P3*	*X*	*m*
			mm										kg
2MVIE 208/VR	R 2	R 2	1375	140	90	817	600	300	750	613	300	600	107
3MVIE 208/VR	R 2	R 2	1375	140	90	817	900	300	750	613	300	900	154
4MVIE 208/VR	R 2	R 2	1375	140	90	817	1200	300	750	613	300	1200	201

Technical data Wilo-Comfort-Vario COR MVIE.../VR

Pump curves

Wilo-Comfort-Vario COR-2 - COR-4 MVIE 403/VR

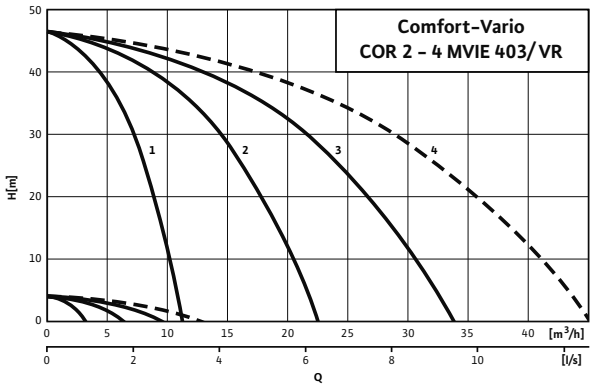

---- including standby pump

Note:
Potable water installations according to DIN 1988, part 5 must include a standby pump.

Selection with standby pump according to duty chart:

1 2-pump system
2 3-pump system
3 4-pump system
4 Select system with next largest pump

If a standby pump is not necessary, the duty chart number corresponds to the number of pumps needed to achieve the calculated maximum system output.

Motor data per pump

Wilo-Comfort-Vario COR-...	Nominal motor power	Nominal current 3~400 V, 50 Hz	Motor efficiency		
	P_2	I_N	$\eta_{m\ 50\%}$	$\eta_{m\ 75\%}$	$\eta_{m\ 100\%}$
	kW	A	%		
MVIE 403/VR	1.1	3.3	79.0	82.0	82.5

Motor efficiency based on 400 V, 50 Hz

Technical data Wilo-Comfort-Vario COR MVIE.../VR

Dimension drawing

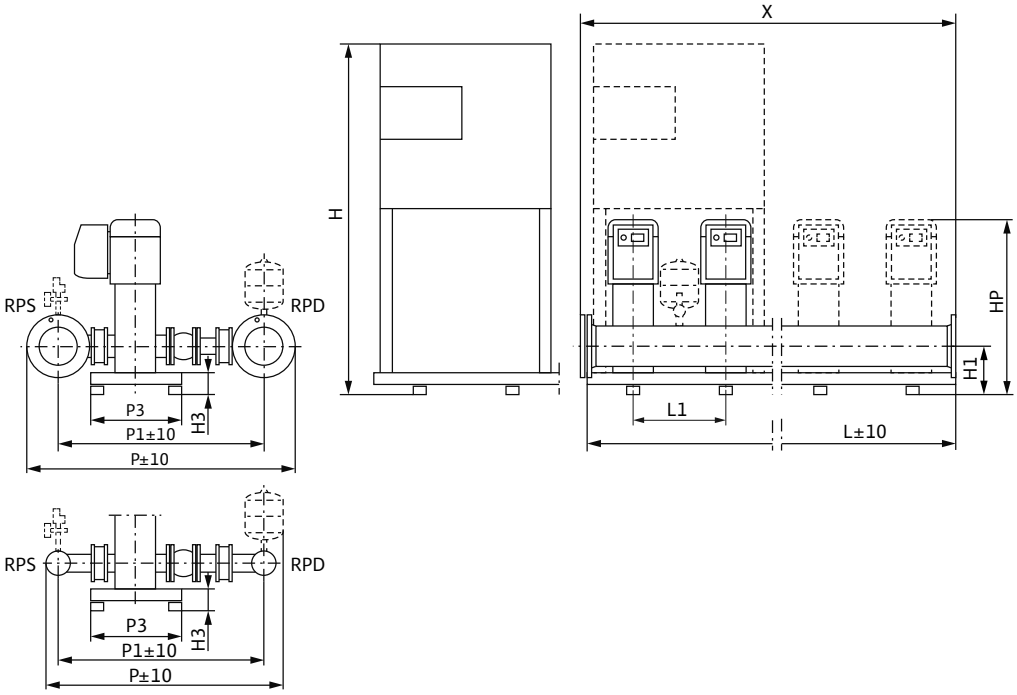

Sample systems are shown. Switchbox position depends on pump height.
Accessories (to be ordered separately): Optional WMS low-water cut-out switchgear kit
Installation surface: flat and horizontal
Installation location: dry, well ventilated and frost-proof

Dimensions, weights

Wilo-Comfort-Vario COR-...	Nominal diameters of the pipe connections on suction side	Nominal diameters of pipe connections on the pressure side	Dimensions										Weight approx.
	RPS	*RPD*	*H*	*H1*	*H3*	*HP*	*L*	*L1*	*P*	*P1*	*P3*	*X*	*m*
			mm										kg
2MVIE 403/VR	R 2	R 2	1375	140	90	642	600	300	750	613	300	600	87
3MVIE 403/VR	R 2	R 2	1375	140	90	642	900	300	750	613	300	900	124
4MVIE 403/VR	R 2½	R 2½	1375	140	90	642	1200	300	782	645	300	1200	163

Technical data Wilo-Comfort-Vario COR MVIE.../VR

Pump curves

Wilo-Comfort-Vario COR-2 - COR-4 MVIE 406/VR

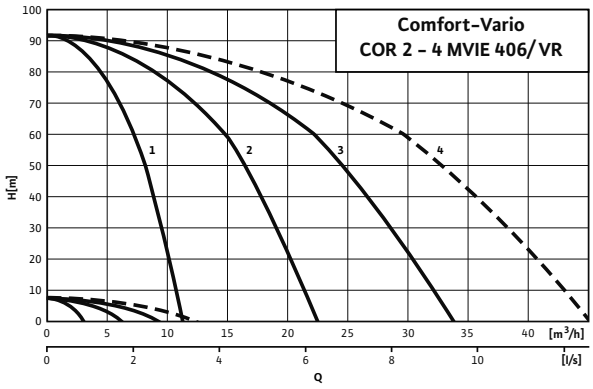

---- including standby pump

Note:
Potable water installations according to DIN 1988, part 5 must include a standby pump.

Selection with standby pump according to duty chart:

1 2-pump system
2 3-pump system
3 4-pump system
4 Select system with next largest pump

If a standby pump is not necessary, the duty chart number corresponds to the number of pumps needed to achieve the calculated maximum system output.

Motor data per pump

Wilo-Comfort-Vario COR-2-4...	Nominal motor power	Nominal current 3~400 V, 50 Hz	Motor efficiency		
	P_2	I_N	$\eta_{m\ 50\%}$	$\eta_{m\ 75\%}$	$\eta_{m\ 100\%}$
	kW	A	%		
MVIE 406/VR	2.2	5.6	81.0	84.0	85.5

Motor efficiency based on 400 V, 50 Hz

Technical data Wilo-Comfort-Vario COR MVIE.../VR

Dimension drawing

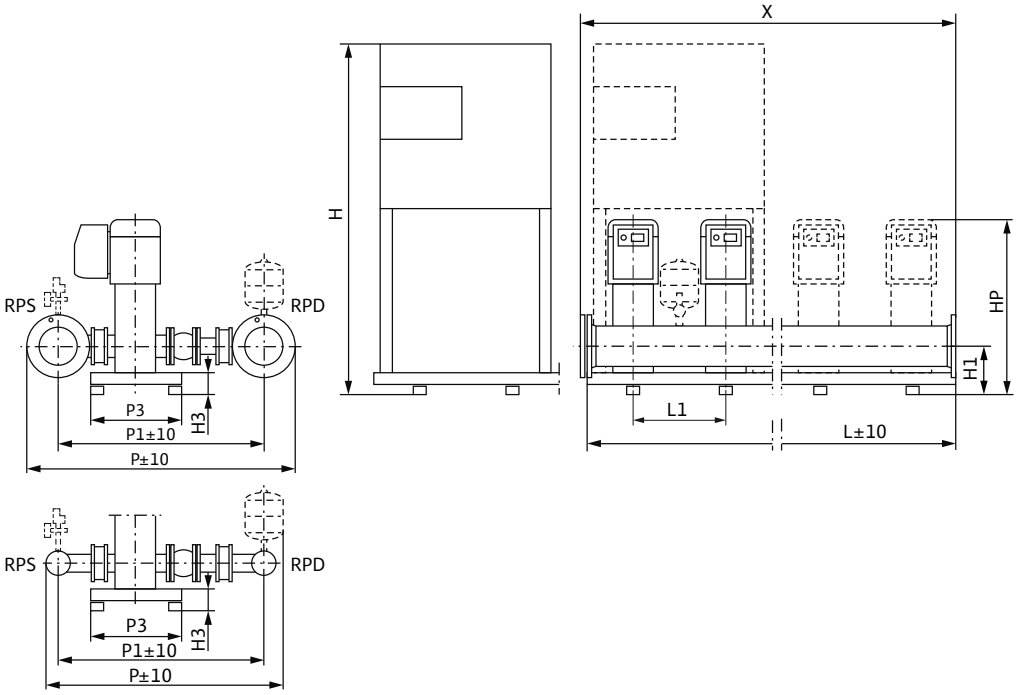

Sample systems are shown. Switchbox position depends on pump height.
Accessories (to be ordered separately): Optional WMS low-water cut-out switchgear kit
Installation surface: flat and horizontal
Installation location: dry, well ventilated and frost-proof

Dimensions, weights

Wilo-Comfort-Vario COR-2-4...	Nominal diameters of the pipe connections on suction side	Nominal diameters of pipe connections on the pressure side	Dimensions										Weight approx.
	RPS	*RPD*	*H*	*H1*	*H3*	*HP*	*L*	*L1*	*P*	*P1*	*P3*	*X*	*m*
			mm										kg
2MVIE 406/VR	R 2	R 2	1375	140	90	769	600	300	750	613	300	600	106
3MVIE 406/VR	R 2	R 2	1375	140	90	769	900	300	750	613	300	900	153
4MVIE 406/VR	R 2½	R 2½	1375	140	90	769	1200	300	782	645	300	1200	201

Technical data Wilo-Comfort-Vario COR MVIE.../VR

Pump curves

Wilo-Comfort-Vario COR-2 - COR-4 MVIE 410/VR

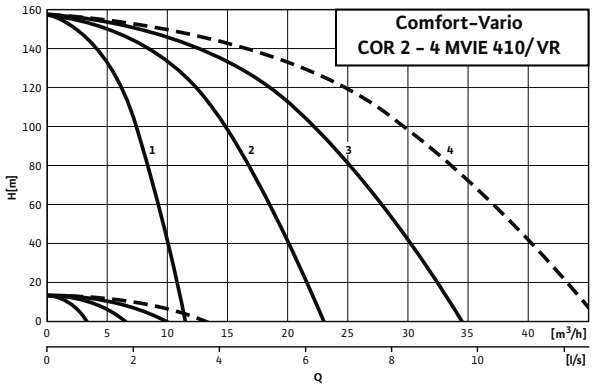

---- including standby pump

Note:
Potable water installations according to DIN 1988, part 5 must include a standby pump.

Selection with standby pump according to duty chart:

1 2-pump system
2 3-pump system
3 4-pump system
4 Select system with next largest pump

If a standby pump is not necessary, the duty chart number corresponds to the number of pumps needed to achieve the calculated maximum system output.

Motor data per pump

Wilo-Comfort-Vario COR-2-4...	Nominal motor power	Nominal current 3~400 V, 50 Hz	Motor efficiency		
	P_2	I_N	$\eta_{m\ 50\%}$	$\eta_{m\ 75\%}$	$\eta_{m\ 100\%}$
	kW	A	%		
MVIE 410/VR	4	9.7	84.5	87.1	87.5

Motor efficiency based on 400 V, 50 Hz

Technical data Wilo-Comfort-Vario COR MVIE.../VR

Dimension drawing

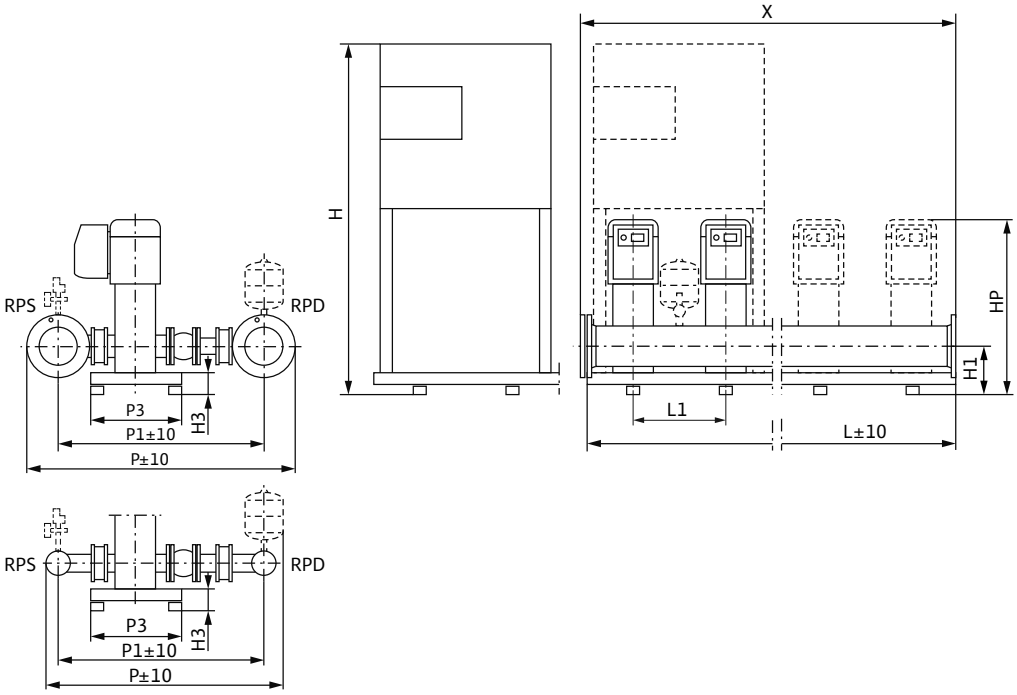

Sample systems are shown. Switchbox position depends on pump height.
Accessories (to be ordered separately): Optional WMS low-water cut-out switchgear kit
Installation surface: flat and horizontal
Installation location: dry, well ventilated and frost-proof

Dimensions, weights

Wilo-Comfort-Vario COR-2-4...	Nominal diameters of the pipe connections on suction side	Nominal diameters of pipe connections on the pressure side	Dimensions										Weight approx.
	RPS	*RPD*	*H*	*H1*	*H3*	*HP*	*L*	*L1*	*P*	*P1*	*P3*	*X*	*m*
			mm										kg
2MVIE 410/VR	R 2	R 2	1375	140	90	925	600	300	750	613	300	600	134
3MVIE 410/VR	R 2	R 2	1375	140	90	925	900	300	750	613	300	900	195
4MVIE 410/VR	R 2½	R 2½	1375	140	90	925	1200	300	782	645	300	1200	256

Technical data Wilo-Comfort-Vario COR MVIE.../VR

Pump curves

Wilo-Comfort-Vario COR-2 - COR-4 MVIE 803/VR

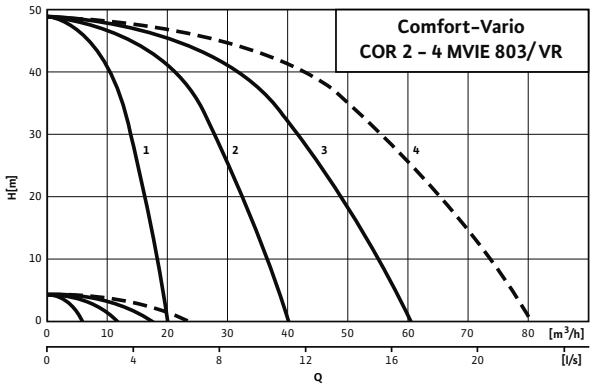

---- including standby pump

Note:
Potable water installations according to DIN 1988, part 5 must include a standby pump.

Selection with standby pump according to duty chart:

1 2-pump system
2 3-pump system
3 4-pump system
4 Select system with next largest pump

If a standby pump is not necessary, the duty chart number corresponds to the number of pumps needed to achieve the calculated maximum system output.

Motor data per pump

Wilo-Comfort-Vario COR-2-4...	Nominal motor power	Nominal current 3~400 V, 50 Hz	Motor efficiency		
	P_2	I_N	$\eta_{m\ 50\%}$	$\eta_{m\ 75\%}$	$\eta_{m\ 100\%}$
	kW	A	%		
MVIE 803/VR	2.2	5.6	81.0	84.0	85.5

Motor efficiency based on 400 V, 50 Hz

Technical data Wilo-Comfort-Vario COR MVIE.../VR

Dimension drawing

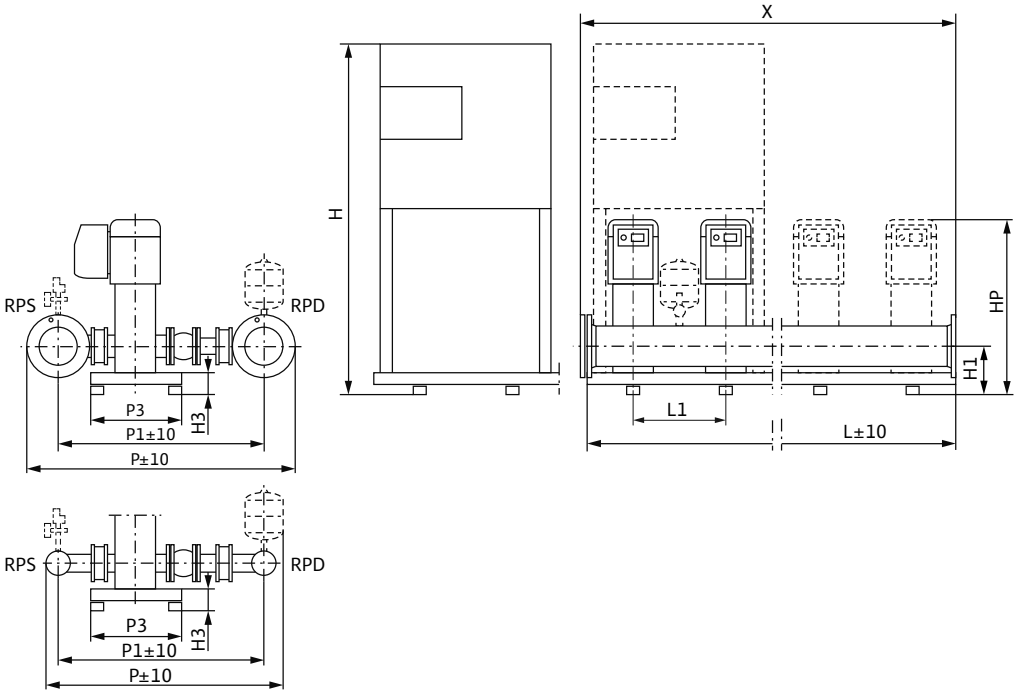

Sample systems are shown. Switchbox position depends on pump height.
Accessories (to be ordered separately): Optional WMS low-water cut-out switchgear kit
Installation surface: flat and horizontal
Installation location: dry, well ventilated and frost-proof

Dimensions, weights

Wilo-Comfort-Vario COR-2-4...	Nominal diameters of the pipe connections on suction side	Nominal diameters of pipe connections on the pressure side	Dimensions										Weight approx.
	RPS	*RPD*	*H*	*H1*	*H3*	*HP*	*L*	*L1*	*P*	*P1*	*P3*	*X*	*m*
			mm										kg
2MVIE 803-2G/VR	R 3	R 3	1375	170	90	754	600	300	920	764	450	600	144
3MVIE 803/VR	R 3	R 3	1375	170	90	754	900	300	920	764	450	900	195
4MVIE 803/VR	R 3	R 3	1375	170	90	754	1200	300	920	764	470	1200	247

Technical data Wilo-Comfort-Vario COR MVIE.../VR

Pump curves

Wilo-Comfort-Vario COR-2 - COR-4 MVIE 806/VR

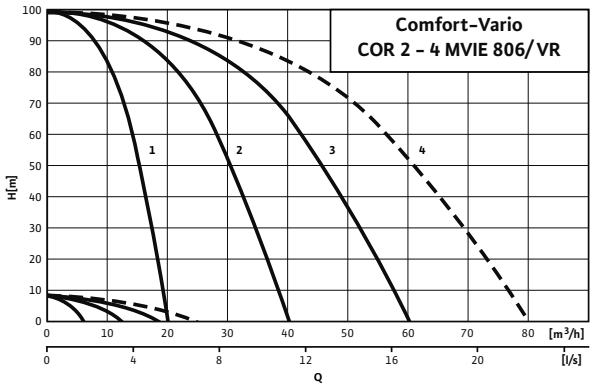

---- including standby pump

Note:
Potable water installations according to DIN 1988, part 5 must include a standby pump.

Selection with standby pump according to duty chart:

1 2-pump system
2 3-pump system
3 4-pump system
4 Select system with next largest pump

If a standby pump is not necessary, the duty chart number corresponds to the number of pumps needed to achieve the calculated maximum system output.

Motor data per pump

Wilo-Comfort-Vario COR-2-4...	Nominal motor power	Nominal current 3~400 V, 50 Hz	Motor efficiency		
	P_2	I_N	$\eta_{m\ 50\%}$	$\eta_{m\ 75\%}$	$\eta_{m\ 100\%}$
	kW	A	%		
MVIE 806/VR	4	9.7	84.5	87.1	87.5

Motor efficiency based on 400 V, 50 Hz

Technical data Wilo-Comfort-Vario COR MVIE.../VR

Dimension drawing

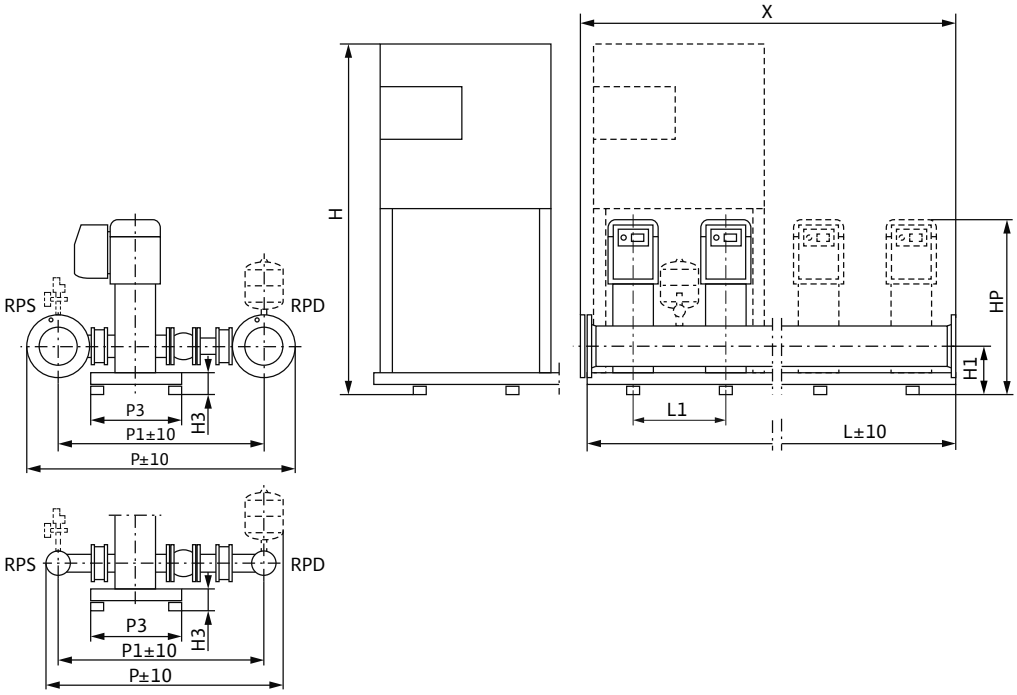

Sample systems are shown. Switchbox position depends on pump height.
Accessories (to be ordered separately): Optional WMS low-water cut-out switchgear kit
Installation surface: flat and horizontal
Installation location: dry, well ventilated and frost-proof

Dimensions, weights

Wilo-Comfort-Vario COR-2-4...	Nominal diameters of the pipe connections on suction side	Nominal diameters of pipe connections on the pressure side	Dimensions										Weight approx.
	RPS	*RPD*	*H*	*H1*	*H3*	*HP*	*L*	*L1*	*P*	*P1*	*P3*	*X*	*m*
			mm										kg
2MVIE 806-2G/VR	R 3	R 3	1375	170	90	804	600	300	920	764	450	600	180
3MVIE 806/VR	R 3	R 3	1375	170	90	804	900	300	920	764	450	900	256
4MVIE 806/VR	R 3	R 3	1375	170	90	804	1200	300	920	764	470	1200	318

Technical data Wilo-Comfort-Vario COR MVIE.../VR

Pump curves

Wilo-Comfort-Vario COR-2 - COR-4 MVIE 808/VR

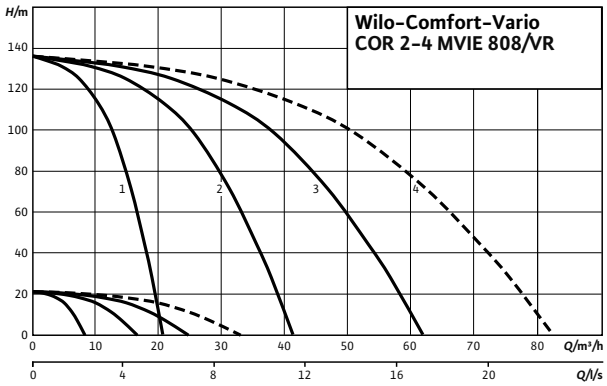

---- including standby pump

Note:
Potable water installations according to DIN 1988, part 5 must include a standby pump.

Selection with standby pump according to duty chart:

1 2-pump system
2 3-pump system
3 4-pump system
4 Select system with next largest pump

If a standby pump is not necessary, the duty chart number corresponds to the number of pumps needed to achieve the calculated maximum system output.

Motor data per pump

Wilo-Comfort-Vario COR-2-4...	Nominal motor power	Nominal current 3~400 V, 50 Hz	Motor efficiency		
	P_2	I_N	$\eta_{m\ 50\%}$	$\eta_{m\ 75\%}$	$\eta_{m\ 100\%}$
	kW	A	%		
MVIE 808/VR	5.5	11	87.4	88.5	88.5

Motor efficiency based on 400 V, 50 Hz

Technical data Wilo-Comfort-Vario COR MVIE.../VR

Dimension drawing

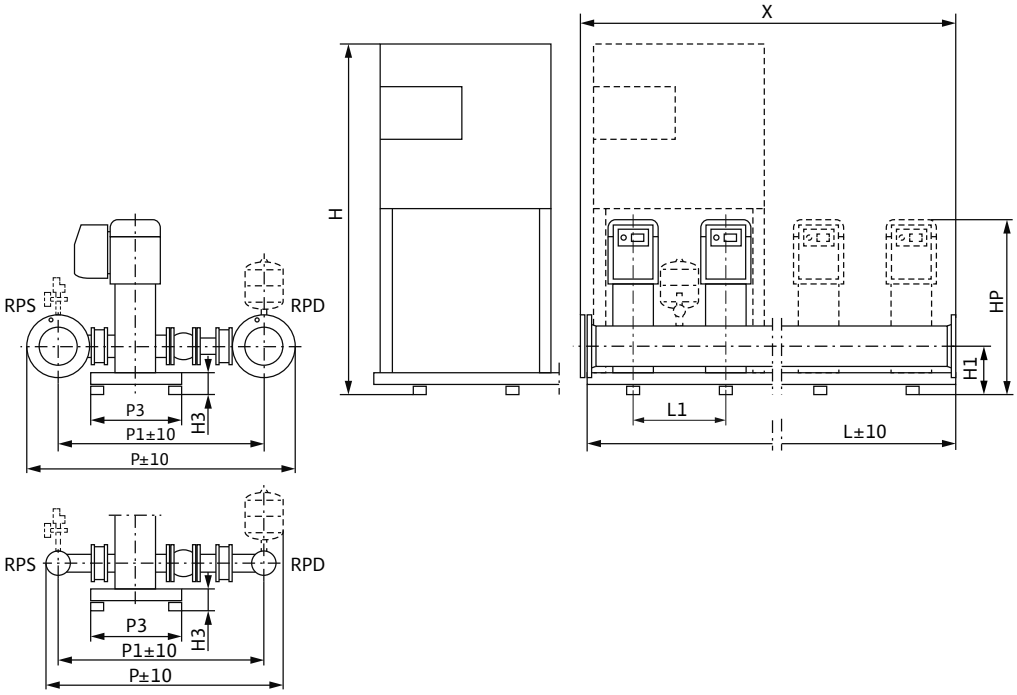

Sample systems are shown. Switchbox position depends on pump height.
Accessories (to be ordered separately): Optional WMS low-water cut-out switchgear kit
Installation surface: flat and horizontal
Installation location: dry, well ventilated and frost-proof

Dimensions, weights

Wilo-Comfort-Vario COR-2-4...	Nominal diameters of the pipe connections on suction side	Nominal diameters of pipe connections on the pressure side	Dimensions										Weight approx.
	RPS	*RPD*	*H*	*H1*	*H3*	*HP*	*L*	*L1*	*P*	*P1*	*P3*	*X*	*m*
			mm										kg
2MVIE 808/VR	R 3	R 3	1555	185	105	1032	1000	500	923	776	500	1000	234
3MVIE 808/VR	R 3	R 3	1650	185	105	1032	1500	500	923	776	500	1500	336
4MVIE 808/VR	R 3	R 3	1650	185	105	1032	2000	500	923	776	500	2000	431

Technical data Wilo-Comfort-Vario COR MVIE.../VR

Pump curves

Wilo-Comfort-Vario COR-2 - COR-4 MVIE 1602/VR

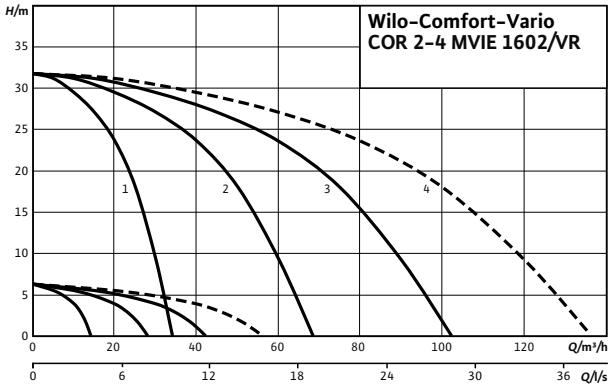

---- including standby pump

Note:
Potable water installations according to DIN 1988, part 5 must include a standby pump.

Selection with standby pump according to duty chart:

1 2-pump system
2 3-pump system
3 4-pump system
4 Select system with next largest pump

If a standby pump is not necessary, the duty chart number corre-sponds to the number of pumps needed to achieve the calculated maximum system output.

Motor data per pump

Wilo-Comfort-Vario COR-2-4...	Nominal motor power	Nominal current 3~400 V, 50 Hz	Motor efficiency		
	P_2	I_N	$\eta_{m\ 50\%}$	$\eta_{m\ 75\%}$	$\eta_{m\ 100\%}$
	kW	A	%		
MVIE 1602-6/VR	2.2	5.6	81.0	84.0	85.5

Motor efficiency based on 400 V, 50 Hz

Technical data Wilo-Comfort-Vario COR MVIE.../VR

Dimension drawing

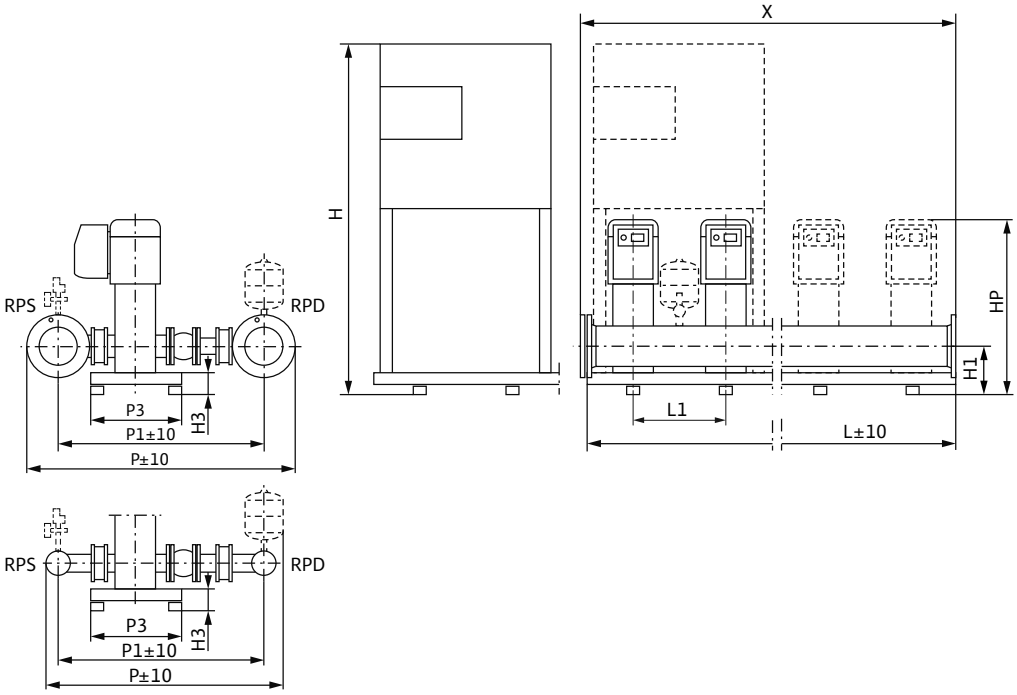

Sample systems are shown. Switchbox position depends on pump height.
Accessories (to be ordered separately): Optional WMS low-water cut-out switchgear kit
Installation surface: flat and horizontal
Installation location: dry, well ventilated and frost-proof

Dimensions, weights

Wilo-Comfort-Vario COR-2-4...	Nominal diameters of the pipe connections on suction side	Nominal diameters of pipe connections on the pressure side	Dimensions										Weight approx.
	RPS	*RPD*	*H*	*H1*	*H3*	*HP*	*L*	*L1*	*P*	*P1*	*P3*	*X*	*m*
			mm										kg
2MVIE 1602-6-2G/VR	R 3	R 3	1375	180	90	749	600	300	935	785	450	600	150
3MVIE 1602-6/VR	DN 100	DN 100	1375	180	90	749	900	300	1036	816	450	900	233
4MVIE 1602-6/VR	DN 100	DN 100	1375	180	90	749	1200	300	1036	816	450	1200	310

Technical data Wilo-Comfort-Vario COR MVIE.../VR

Pump curves

Wilo-Comfort-Vario COR-2 - COR-4 MVIE 1603/VR

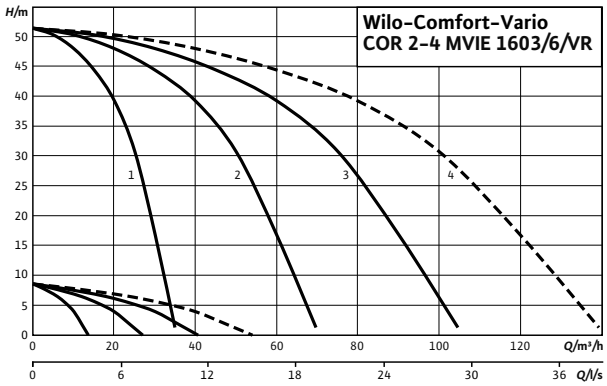

---- including standby pump

Note:
Potable water installations according to DIN 1988, part 5 must include a standby pump.

Selection with standby pump according to duty chart:

1 2-pump system
2 3-pump system
3 4-pump system
4 Select system with next largest pump

If a standby pump is not necessary, the duty chart number corresponds to the number of pumps needed to achieve the calculated maximum system output.

Motor data per pump

Wilo-Comfort-Vario COR-2-4...	Nominal motor power	Nominal current 3~400 V, 50 Hz	Motor efficiency		
	P_2	I_N	$\eta_{m\ 50\%}$	$\eta_{m\ 75\%}$	$\eta_{m\ 100\%}$
	kW	A	%		
MVIE 1603-6/VR	4	9.7	84.5	87.1	87.5

Motor efficiency based on 400 V, 50 Hz

Technical data Wilo-Comfort-Vario COR MVIE.../VR

Dimension drawing

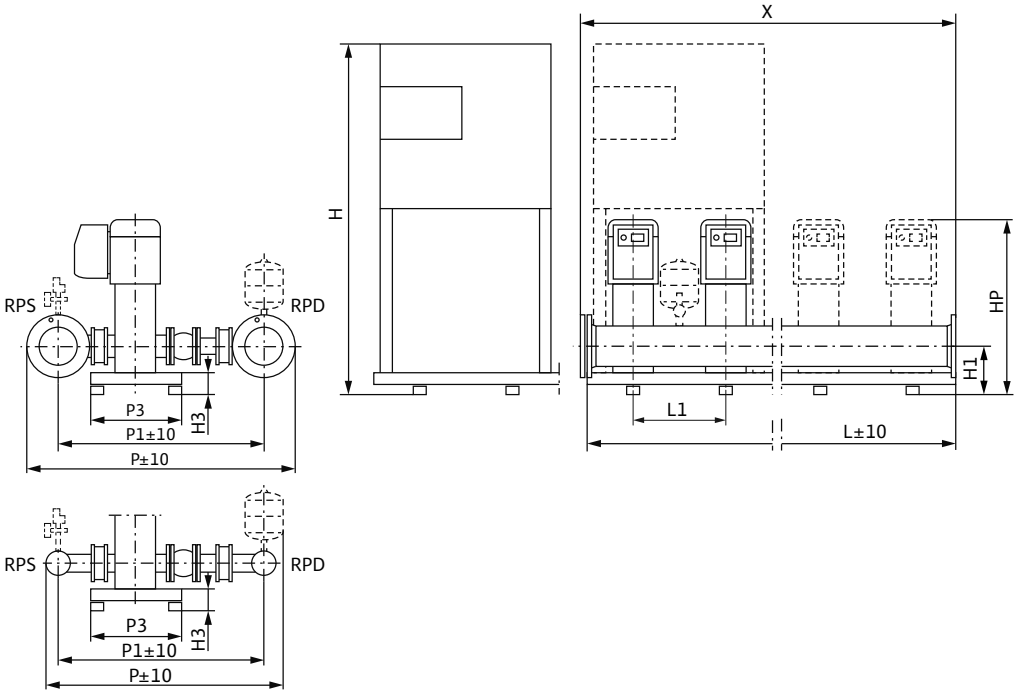

Sample systems are shown. Switchbox position depends on pump height.
Accessories (to be ordered separately): Optional WMS low-water cut-out switchgear kit
Installation surface: flat and horizontal
Installation location: dry, well ventilated and frost-proof

Dimensions, weights

Wilo-Comfort-Vario COR-2-4...	Nominal diameters of the pipe connections on suction side	Nominal diameters of pipe connections on the pressure side	Dimensions										Weight approx.
	RPS	*RPD*	*H*	*H1*	*H3*	*HP*	*L*	*L1*	*P*	*P1*	*P3*	*X*	*m*
			mm										kg
2MVIE 1603-6-2G/VR	R 3	R 3	1375	180	90	884	600	300	935	785	450	600	184
3MVIE 1603-6/VR	DN 100	DN 100	1375	180	90	884	900	300	1036	816	450	900	277
4MVIE 1603-6/VR	DN 100	DN 100	1375	180	90	884	1200	300	1036	816	450	1200	366

Technical data Wilo-Comfort-Vario COR MVIE.../VR

Pump curves

Wilo-Comfort-Vario COR-2 - COR-4 MVIE 1605/6/VR

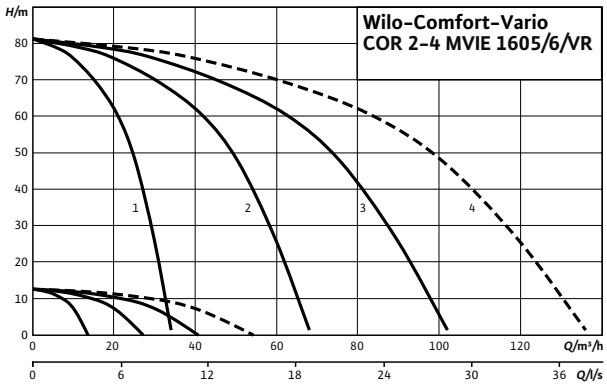

---- including standby pump

Note:
Potable water installations according to DIN 1988, part 5 must include a standby pump.

Selection with standby pump according to duty chart:

1 2-pump system
2 3-pump system
3 4-pump system
4 Select system with next largest pump

If a standby pump is not necessary, the duty chart number corresponds to the number of pumps needed to achieve the calculated maximum system output.

Motor data per pump

Wilo-Comfort-Vario COR-2-4...	Nominal motor power	Nominal current 3~400 V, 50 Hz	Motor efficiency		
	P_2	I_N	$\eta_{m\ 50\%}$	$\eta_{m\ 75\%}$	$\eta_{m\ 100\%}$
	kW	A	%		
MVIE 1605-6/VR	5.5	10.8	87.4	88.5	88.5

Motor efficiency based on 400 V, 50 Hz

Technical data Wilo-Comfort-Vario COR MVIE.../VR

Dimension drawing

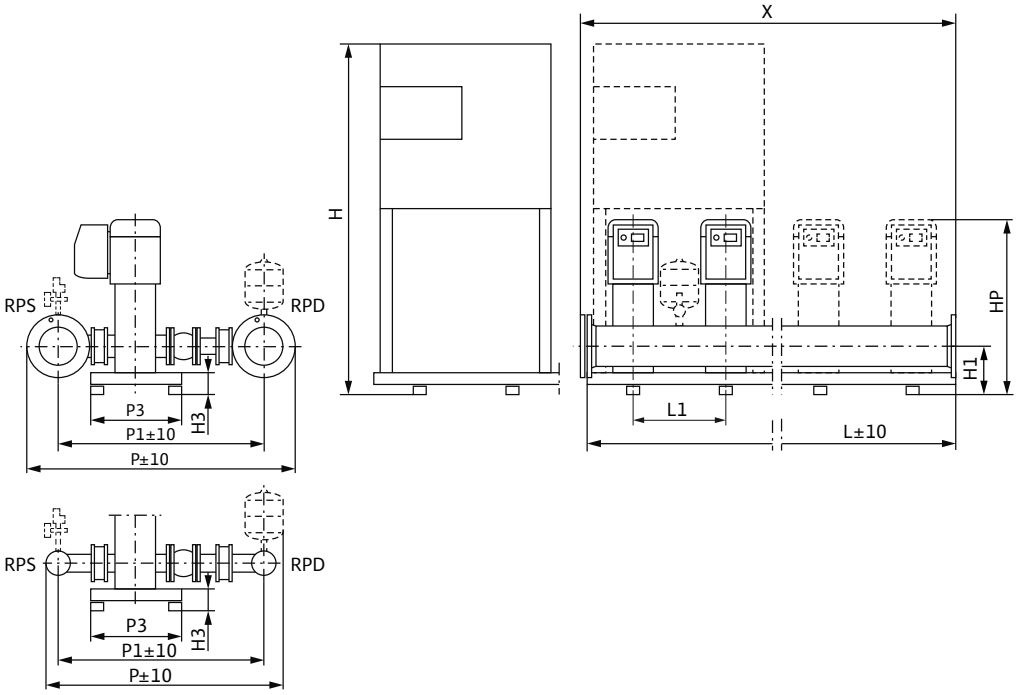

Sample systems are shown. Switchbox position depends on pump height.
Accessories (to be ordered separately): Optional WMS low-water cut-out switchgear kit
Installation surface: flat and horizontal
Installation location: dry, well ventilated and frost-proof

Dimensions, weights

Wilo-Comfort-Vario COR-2-4...	Nominal diameters of the pipe connections on suction side	Nominal diameters of pipe connections on the pressure side	Dimensions										Weight approx.
	RPS	*RPD*	*H*	*H1*	*H3*	*HP*	*L*	*L1*	*P*	*P1*	*P3*	*X*	*m*
			mm										kg
2MVIE 1605-6/VR	R 3	R 3	1555	185	105	1027	1000	500	935	785	500	1000	247
3MVIE 1605-6/VR	DN 100	DN 100	1650	185	105	1027	1500	500	1036	816	500	1500	371
4MVIE 1605-6/VR	DN 100	DN 100	1650	185	105	1027	2000	500	1036	816	500	2000	492

Technical data Wilo-Comfort-Vario COR MVIE.../VR

Pump curves

Wilo-Comfort-Vario COR-2 - COR-4 MVIE 1606/VR

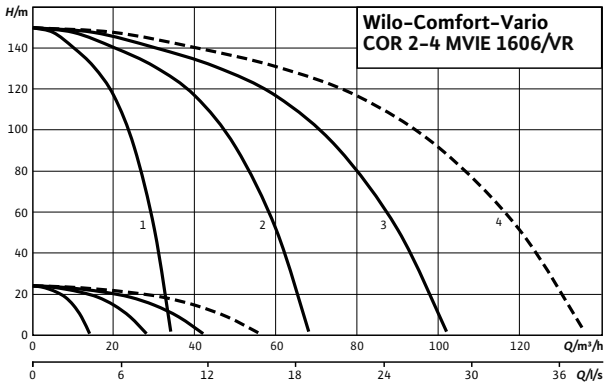

---- including standby pump

Note:
Potable water installations according to DIN 1988, part 5 must include a standby pump.

Selection with standby pump according to duty chart:

1 2-pump system
2 3-pump system
3 4-pump system
4 Select system with next largest pump

If a standby pump is not necessary, the duty chart number corresponds to the number of pumps needed to achieve the calculated maximum system output.

Motor data per pump

Wilo-Comfort-Vario COR-2-4...	Nominal motor power	Nominal current 3~400 V, 50 Hz	Motor efficiency		
	P_2	I_N	$\eta_{m\ 50\%}$	$\eta_{m\ 75\%}$	$\eta_{m\ 100\%}$
	kW	A	%		
MVIE 1606/VR	11	21.2	88.8	90.2	90.5

Motor efficiency based on 400 V, 50 Hz

Technical data Wilo-Comfort-Vario COR MVIE.../VR

Dimension drawing

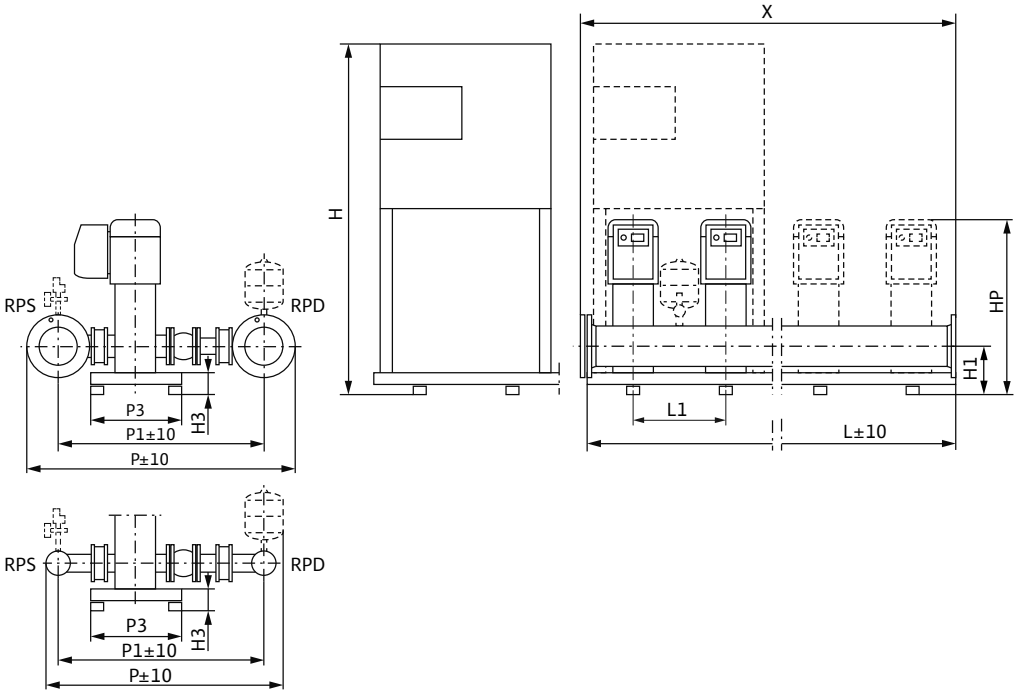

Sample systems are shown. Switchbox position depends on pump height.
Accessories (to be ordered separately): Optional WMS low-water cut-out switchgear kit
Installation surface: flat and horizontal
Installation location: dry, well ventilated and frost-proof

Dimensions, weights

Wilo-Comfort-Vario COR-2-4...	Nominal diameters of the pipe connections on suction side	Nominal diameters of pipe connections on the pressure side	Dimensions										Weight approx.
	RPS	*RPD*	*H*	*H1*	*H3*	*HP*	*L*	*L1*	*P*	*P1*	*P3*	*X*	*m*
			mm										kg
2MVIE 1606/VR	DN 100	DN 100	1440	215	125	1165	1700	500	1100	890	500	1000	510
3MVIE 1606/VR	DN 100	DN 100	1440	215	125	1165	2200	500	1100	890	500	1500	743
4MVIE 1606/VR	DN 100	DN 100	1650	215	125	1165	2700	500	1100	890	500	2000	982

Technical data Wilo-Comfort-Vario COR MVIE.../VR

Pump curves

Wilo-Comfort-Vario COR-2 - COR-4 MVIE 1607/6/VR

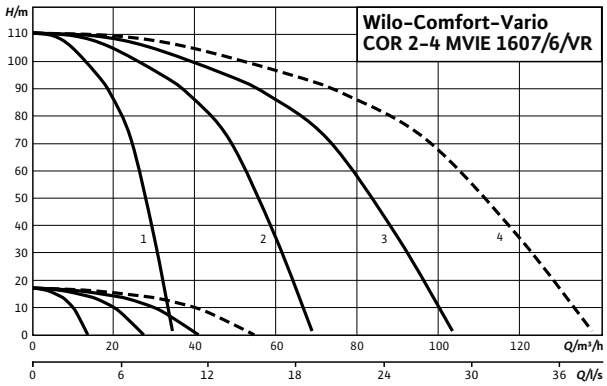

---- including standby pump

Note:
Potable water installations according to DIN 1988, part 5 must include a standby pump.

Selection with standby pump according to duty chart:

1 2-pump system
2 3-pump system
3 4-pump system
4 Select system with next largest pump

If a standby pump is not necessary, the duty chart number corresponds to the number of pumps needed to achieve the calculated maximum system output.

Motor data per pump

Wilo-Comfort-Vario COR-2-4...	Nominal motor power	Nominal current 3~400 V, 50 Hz	Motor efficiency		
	P_2	I_N	$\eta_{m\ 50\%}$	$\eta_{m\ 75\%}$	$\eta_{m\ 100\%}$
	kW	A	%		
MVIE 1607-6/VR	7.5	14.3	88.4	89.5	89.5

Motor efficiency based on 400 V, 50 Hz

Technical data Wilo-Comfort-Vario COR MVIE.../VR

Dimension drawing

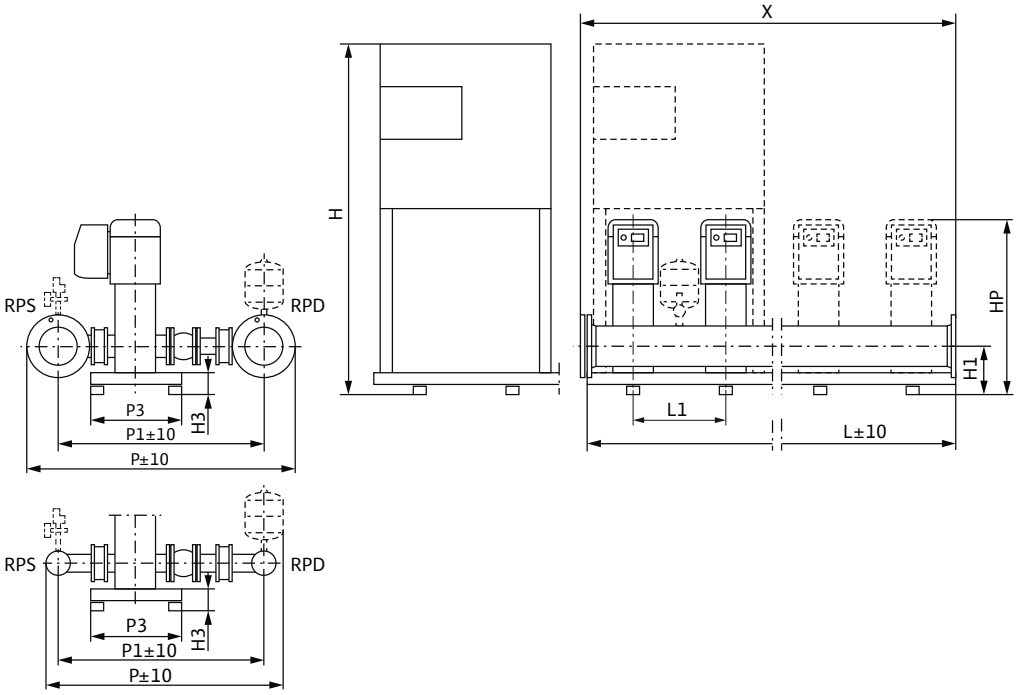

Sample systems are shown. Switchbox position depends on pump height.
Accessories (to be ordered separately): Optional WMS low-water cut-out switchgear kit
Installation surface: flat and horizontal
Installation location: dry, well ventilated and frost-proof

Dimensions, weights

Wilo-Comfort-Vario COR-2-4...	Nominal diameters of the pipe connections on suction side	Nominal diameters of pipe connections on the pressure side	Dimensions										Weight approx.
	RPS	*RPD*	*H*	*H1*	*H3*	*HP*	*L*	*L1*	*P*	*P1*	*P3*	*X*	*m*
			mm										kg
2MVIE 1607-6/VR	R 3	R 3	1555	185	105	1102	1000	500	935	785	500	1000	286
3MVIE 1607-6/VR	DN 100	DN 100	1650	185	105	1102	1500	500	1036	816	500	1500	417
4MVIE 1607-6/VR	DN 100	DN 100	1650	185	105	1102	2000	500	1036	816	500	2000	552

Technical data Wilo-Comfort-Vario COR MVIE.../VR

Pump curves

Wilo-Comfort-Vario COR-2 - COR-4 MVIE 3202/VR

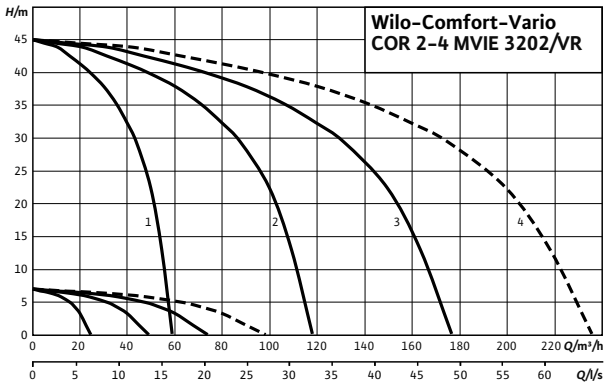

---- including standby pump

Note:
Potable water installations according to DIN 1988, part 5 must include a standby pump.

Selection with standby pump according to duty chart:

1 2-pump system
2 3-pump system
3 4-pump system
4 Select system with next largest pump

If a standby pump is not necessary, the duty chart number corresponds to the number of pumps needed to achieve the calculated maximum system output.

Motor data per pump

Wilo-Comfort-Vario COR-2-4...	Nominal motor power	Nominal current 3~400 V, 50 Hz	Motor efficiency		
	P_2	I_N	$\eta_{m\ 50\%}$	$\eta_{m\ 75\%}$	$\eta_{m\ 100\%}$
	kW	A	%		
MVIE 3202-2G/VR	5.5	10.6	87.4	88.5	88.5

Motor efficiency based on 400 V, 50 Hz

Technical data Wilo-Comfort-Vario COR MVIE.../VR

Dimension drawing

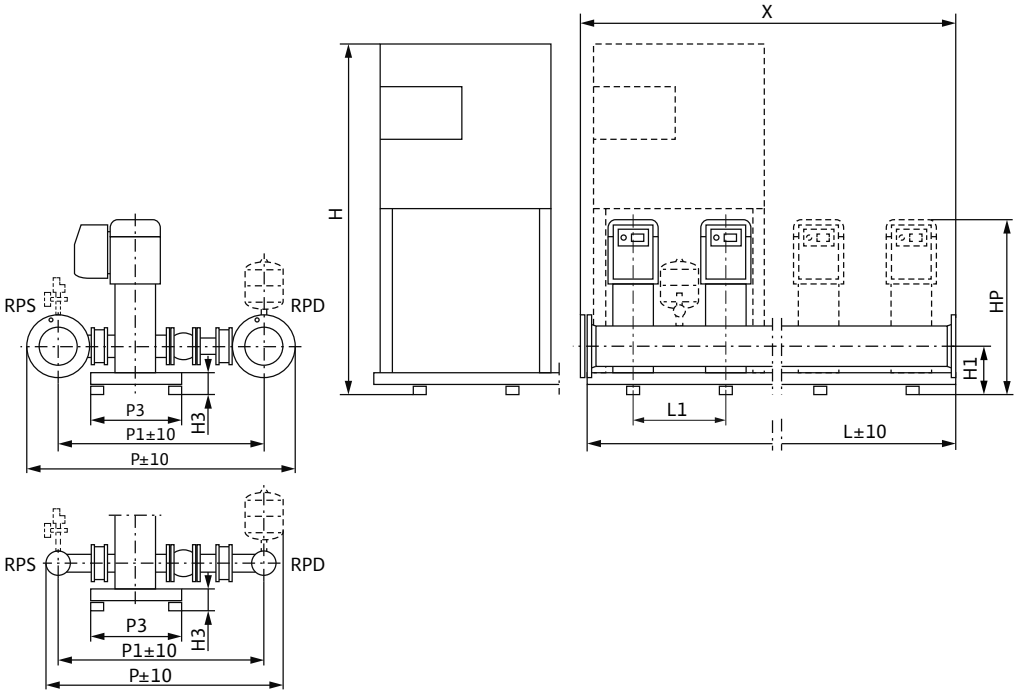

Sample systems are shown. Switchbox position depends on pump height.
Accessories (to be ordered separately): Optional WMS low-water cut-out switchgear kit
Installation surface: flat and horizontal
Installation location: dry, well ventilated and frost-proof

Dimensions, weights

Wilo-Comfort-Vario COR-...	Nominal diameters of the pipe connections on suction side	Nominal diameters of pipe connections on the pressure side	Dimensions										Weight approx.
	RPS	*RPD*	*H*	*H1*	*H3*	*HP*	*L*	*L1*	*P*	*P1*	*P3*	*X*	*m*
			mm										kg
2MVIE 3202-2G/VR	DN 150	DN 150	1575	230	125	965	1000	500	1340	1055	500	1000	490
3MVIE 3202-2G/VR	DN 150	DN 150	1670	230	125	965	1500	500	1340	1055	500	1500	728
4MVIE 3202-2G/VR	DN 150	DN 150	1670	230	125	965	2000	500	1340	1055	500	2000	966

Technical data Wilo-Comfort-Vario COR MVIE.../VR

Pump curves

Wilo-Comfort-Vario COR-2 - COR-4 MVIE 3203-7,5/VR

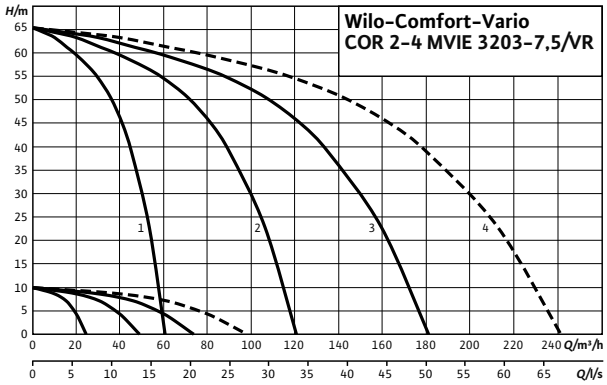

---- including standby pump

Note:
Potable water installations according to DIN 1988, part 5 must include a standby pump.

Selection with standby pump according to duty chart:

1 2-pump system
2 3-pump system
3 4-pump system
4 Select system with next largest pump

If a standby pump is not necessary, the duty chart number corresponds to the number of pumps needed to achieve the calculated maximum system output.

Motor data per pump

Wilo-Comfort-Vario COR-2-4...	Nominal motor power	Nominal current 3~400 V, 50 Hz	Motor efficiency		
	P_2	I_N	$\eta_{m\,50\%}$	$\eta_{m\,75\%}$	$\eta_{m\,100\%}$
	kW	A	%		
MVIE 3203-7.5-2G/VR	7.5	15.1	88.4	89.5	89.5

Motor efficiency based on 400 V, 50 Hz

Technical data Wilo-Comfort-Vario COR MVIE.../VR

Dimension drawing

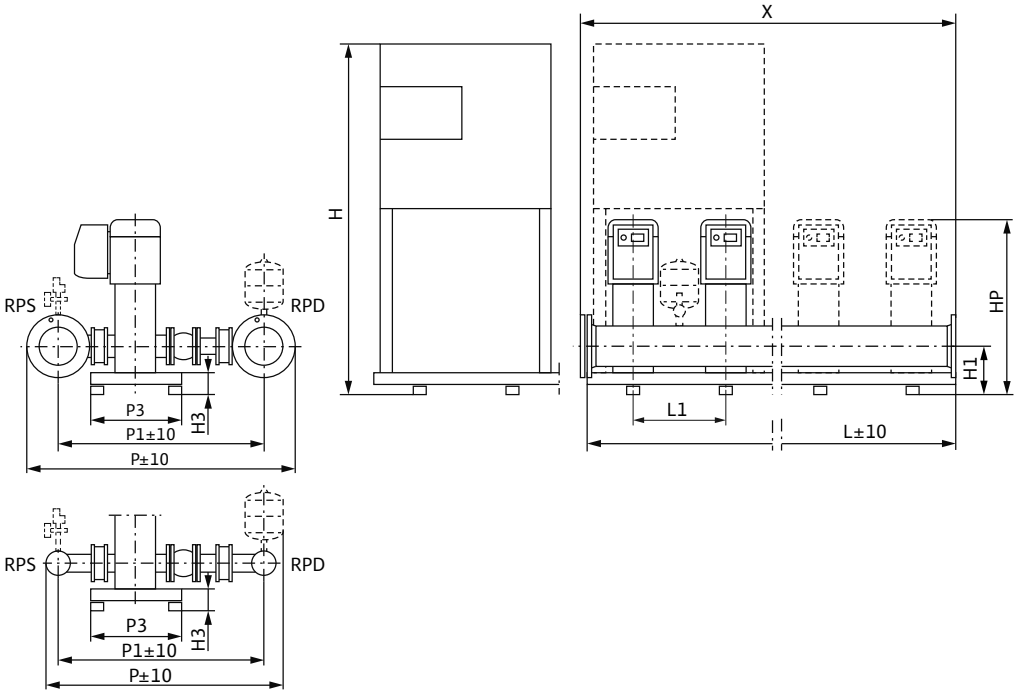

Sample systems are shown. Switchbox position depends on pump height.
Accessories (to be ordered separately): Optional WMS low-water cut-out switchgear kit
Installation surface: flat and horizontal
Installation location: dry, well ventilated and frost-proof

Dimensions, weights

Wilo-Comfort-Vario COR-...	Nominal diameters of the pipe connec-tions on suction side	Nominal diameters of pipe con-nections on the pressure side	Dimensions										Weight approx.
	RPS	*RPD*	*H*	*H1*	*H3*	*HP*	*L*	*L1*	*P*	*P1*	*P3*	*X*	*m*
			mm										kg
2MVIE 3203-7.5-2G/VR	DN 150	DN 150	1575	230	125	1011	1000	500	1340	1055	500	1000	514
3MVIE 3203-7.5-2G/VR	DN 150	DN 150	1670	230	125	1011	1500	500	1340	1055	500	1500	764
4MVIE 3203-7.5-2G/VR	DN 150	DN 150	1670	230	125	1011	2000	500	1340	1055	500	2000	1044

Technical data Wilo-Comfort-Vario COR MVIE.../VR

Pump curves

Wilo-Comfort-Vario COR-2 - COR-4 MVIE 3203-11/VR

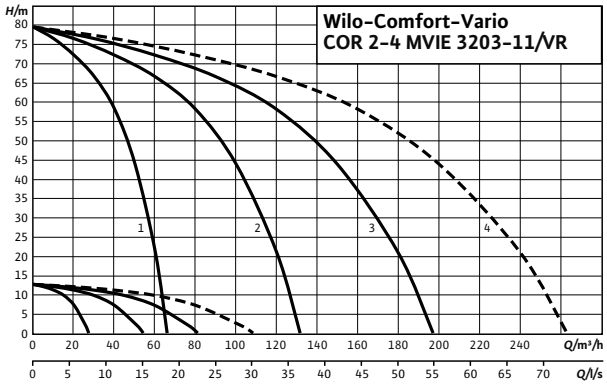

---- including standby pump

Note:
Potable water installations according to DIN 1988, part 5 must include a standby pump.

Selection with standby pump according to duty chart:

1 2-pump system
2 3-pump system
3 4-pump system
4 Select system with next largest pump

If a standby pump is not necessary, the duty chart number corresponds to the number of pumps needed to achieve the calculated maximum system output.

Motor data per pump

Wilo-Comfort-Vario COR-2-4...	Nominal motor power	Nominal current 3~400 V, 50 Hz	Motor efficiency		
	P_2	I_N	$\eta_{m\ 50\%}$	$\eta_{m\ 75\%}$	$\eta_{m\ 100\%}$
	kW	A	%		
MVIE 3203-11/VR	11	21.2	88.8	90.2	90.5

Motor efficiency based on 400 V, 50 Hz

Technical data Wilo-Comfort-Vario COR MVIE.../VR

Dimension drawing

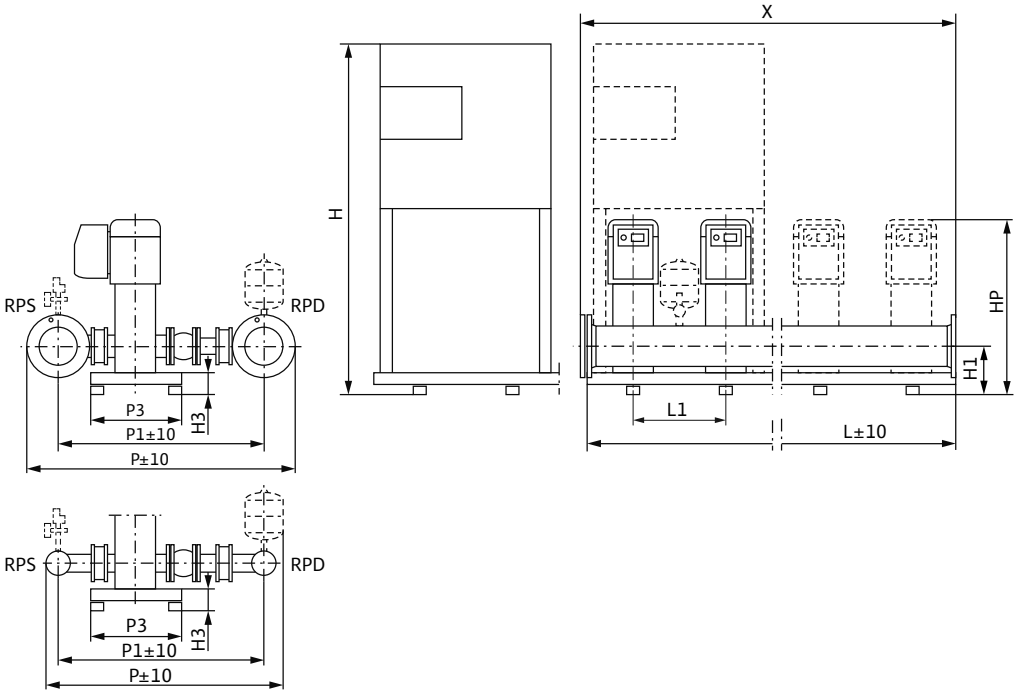

Sample systems are shown. Switchbox position depends on pump height.
Accessories (to be ordered separately): Optional WMS low-water cut-out switchgear kit
Installation surface: flat and horizontal
Installation location: dry, well ventilated and frost-proof

Dimensions, weights

Wilo-Comfort-Vario COR-2-4...	Nominal diameters of the pipe connections on suction side	Nominal diameters of pipe connections on the pressure side	Dimensions										Weight approx.
	RPS	*RPD*	*H*	*H1*	*H3*	*HP*	*L*	*L1*	*P*	*P1*	*P3*	*X*	*m*
			mm										kg
2MVIE 3203-11/VR	DN 150	DN 150	1440	245	125	1126	1700	500	1340	1055	500	1000	586
3MVIE 3203-11/VR	DN 150	DN 150	1440	245	125	1126	2200	500	1340	1055	500	1500	567
4MVIE 3203-11/VR	DN 150	DN 150	1705	245	125	1126	2700	500	1340	1055	500	2000	1148

Technical data Wilo-Comfort-Vario COR MVIE.../VR

Pump curves

Wilo-Comfort-Vario COR-2 - COR-4 MVIE 3204/VR

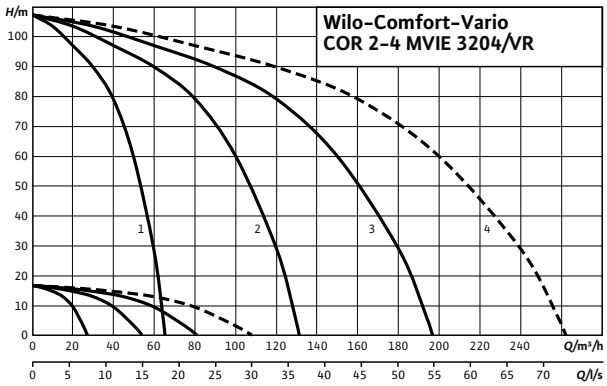

---- including standby pump

Note:
Potable water installations according to DIN 1988, part 5 must include a standby pump.

Selection with standby pump according to duty chart:

1 2-pump system
2 3-pump system
3 4-pump system
4 Select system with next largest pump

If a standby pump is not necessary, the duty chart number corre-sponds to the number of pumps needed to achieve the calculated maximum system output.

Motor data per pump

Wilo-Comfort-Vario COR-2-4...	Nominal motor power	Nominal current 3~400 V, 50 Hz	Motor efficiency		
	P_2	I_N	$\eta_{m\ 50\%}$	$\eta_{m\ 75\%}$	$\eta_{m\ 100\%}$
	kW	A	%		
MVIE 3204/VR	15	25.4	90.6	91.1	90.7

Motor efficiency based on 400 V, 50 Hz

Technical data Wilo-Comfort-Vario COR MVIE.../VR

Dimension drawing

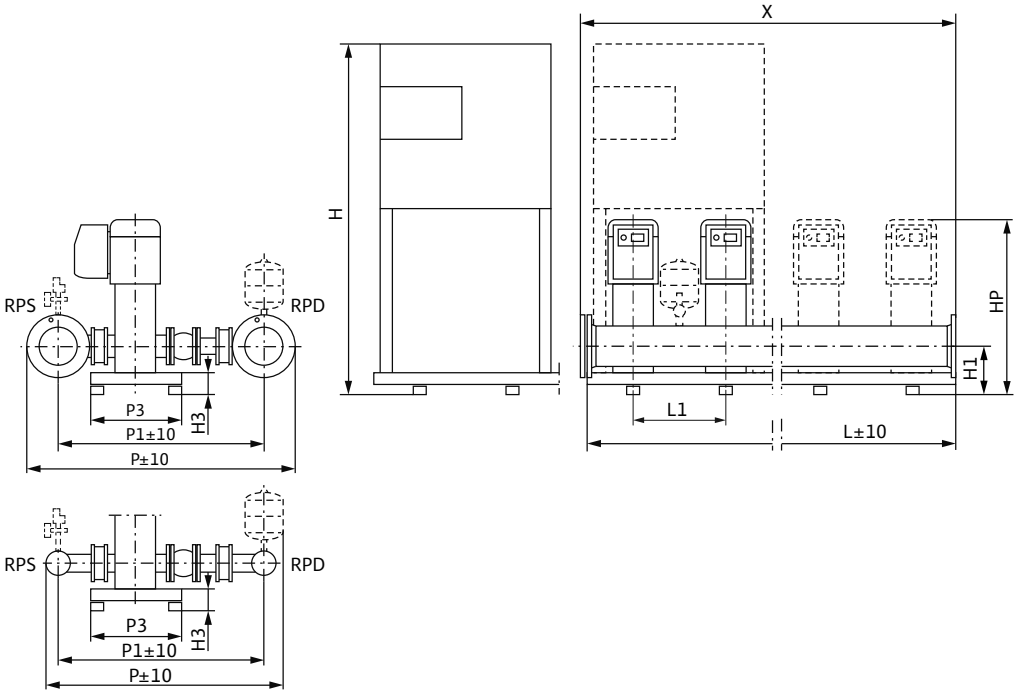

Sample systems are shown. Switchbox position depends on pump height.
Accessories (to be ordered separately): Optional WMS low-water cut-out switchgear kit
Installation surface: flat and horizontal
Installation location: dry, well ventilated and frost-proof

Dimensions, weights

Wilo-Comfort-Vario COR-2-4...	Nominal diameters of the pipe connections on suction side	Nominal diameters of pipe connections on the pressure side	Dimensions										Weight approx.
	RPS	*RPD*	*H*	*H1*	*H3*	*HP*	*L*	*L1*	*P*	*P1*	*P3*	*X*	*m*
			mm										kg
2MVIE 3204/VR	DN 150	DN 150	1440	245	125	1158	1700	500	1340	1055	500	1000	624
3MVIE 3204/VR	DN 150	DN 150	1705	245	125	1158	2200	500	1340	1055	500	1500	924
4MVIE 3204/VR	DN 150	DN 150	1705	245	125	1158	2700	500	1340	1055	500	2000	1224

Technical data Wilo-Comfort-Vario COR MVIE.../VR

Pump curves

Wilo-Comfort-Vario COR-2 - COR-4 MVIE 3205/VR

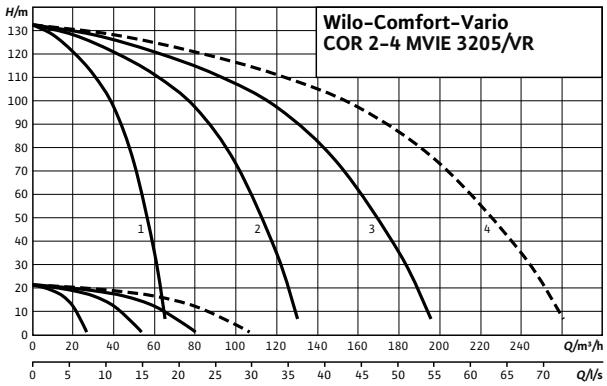

---- including standby pump

Note:
Potable water installations according to DIN 1988, part 5 must include a standby pump.

Selection with standby pump according to duty chart:

1 2-pump system
2 3-pump system
3 4-pump system
4 Select system with next largest pump

If a standby pump is not necessary, the duty chart number corresponds to the number of pumps needed to achieve the calculated maximum system output.

Motor data per pump

Wilo-Comfort-Vario COR-2-4...	Nominal motor power	Nominal current 3~400 V, 50 Hz	Motor efficiency		
	P_2	I_N	$\eta_{m\ 50\%}$	$\eta_{m\ 75\%}$	$\eta_{m\ 100\%}$
	kW	A	%		
MVIE 3205/VR	18.5	33.6	89.4	90.6	91.1

Motor efficiency based on 400 V, 50 Hz

Technical data Wilo-Comfort-Vario COR MVIE.../VR

Dimension drawing

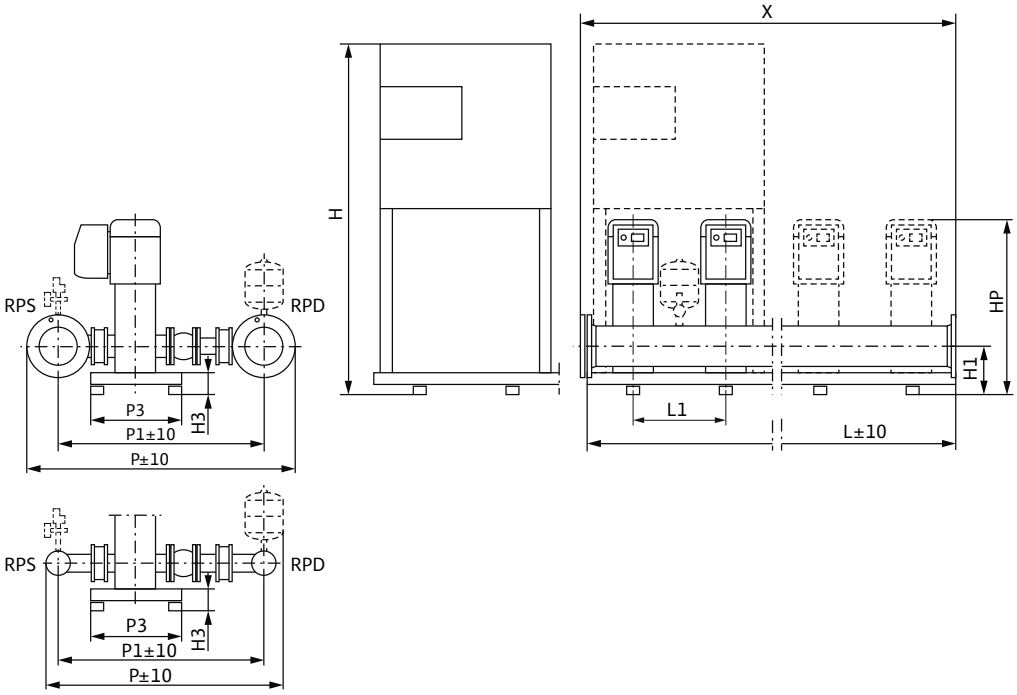

Sample systems are shown. Switchbox position depends on pump height.
Accessories (to be ordered separately): Optional WMS low-water cut-out switchgear kit
Installation surface: flat and horizontal
Installation location: dry, well ventilated and frost-proof

Dimensions, weights

Wilo-Comfort-Vario COR-2-4...	Nominal diameters of the pipe connections on suction side	Nominal diameters of pipe connections on the pressure side	Dimensions										Weight approx.
	RPS	*RPD*	*H*	*H1*	*H3*	*HP*	*L*	*L1*	*P*	*P1*	*P3*	*X*	*m*
			mm										kg
2MVIE 3205/VR	DN 150	DN 150	1440	245	125	1313	1700	500	1340	1055	500	1000	722
3MVIE 3205/VR	DN 150	DN 150	1705	245	125	1313	2200	500	1340	1055	500	1500	1071
4MVIE 3205/VR	DN 150	DN 150	1705	245	125	1313	2700	500	1340	1055	500	2000	1420

Technical data Wilo-Comfort-Vario COR MVIE.../VR

Pump curves

Wilo-Comfort-Vario COR-2 - COR-4 MVIE 5202/VR

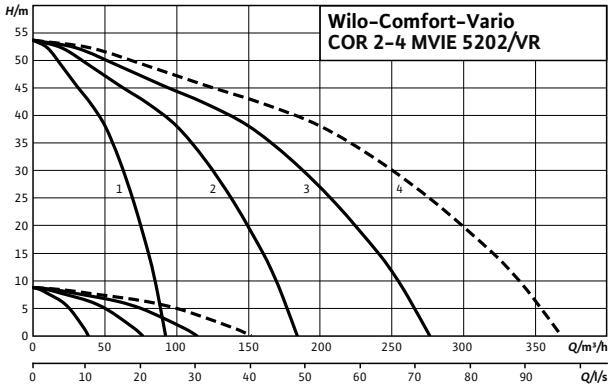

---- including standby pump

Note:
Potable water installations according to DIN 1988, part 5 must include a standby pump.

Selection with standby pump according to duty chart:

1 2-pump system
2 3-pump system
3 4-pump system
4 Select system with next largest pump

If a standby pump is not necessary, the duty chart number corresponds to the number of pumps needed to achieve the calculated maximum system output.

Motor data per pump

Wilo-Comfort-Vario COR-2-4...	Nominal motor power	Nominal current 3~400 V, 50 Hz	Motor efficiency		
	P_2	I_N	$\eta_{m\ 50\%}$	$\eta_{m\ 75\%}$	$\eta_{m\ 100\%}$
	kW	A	%		
MVIE 5202-2G/VR	7.5	14.7	88.4	89.5	89.5

Motor efficiency based on 400 V, 50 Hz

Technical data Wilo-Comfort-Vario COR MVIE.../VR

Dimension drawing

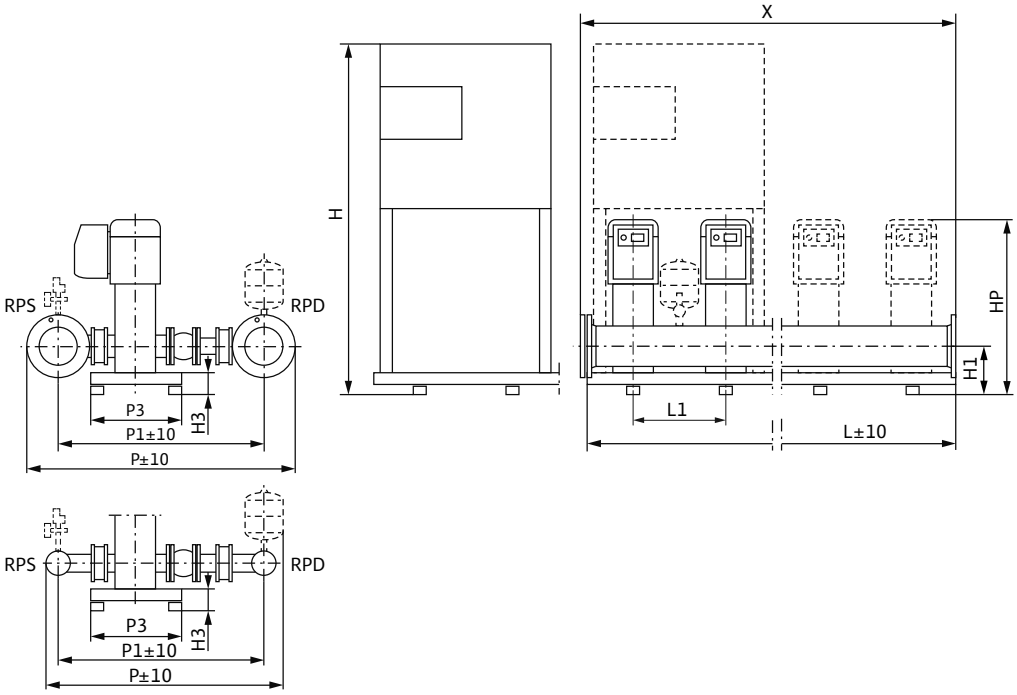

Sample systems are shown. Switchbox position depends on pump height.
Accessories (to be ordered separately): Optional WMS low-water cut-out switchgear kit
Installation surface: flat and horizontal
Installation location: dry, well ventilated and frost-proof

Dimensions, weights

Wilo-Comfort-Vario COR-...	Nominal diameters of the pipe connections on suction side	Nominal diameters of pipe connections on the pressure side	Dimensions										Weight approx.
	RPS	*RPD*	*H*	*H1*	*H3*	*HP*	*L*	*L1*	*P*	*P1*	*P3*	*X*	*m*
			mm										kg
2MVIE 5202-2G/VR	DN 150	DN 150	1575	230	125	981	1000	500	1310	1022	500	1000	534
3MVIE 5202-2G/VR	DN 150	DN 150	1670	230	125	981	1500	500	1310	1022	500	1500	794
4MVIE 5202-2G/VR	DN 150	DN 150	1670	230	125	981	2000	500	1310	1022	500	2000	1084

Technical data Wilo-Comfort-Vario COR MVIE.../VR

Pump curves

Wilo-Comfort-Vario COR-2 - COR-4 MVIE 5203/VR

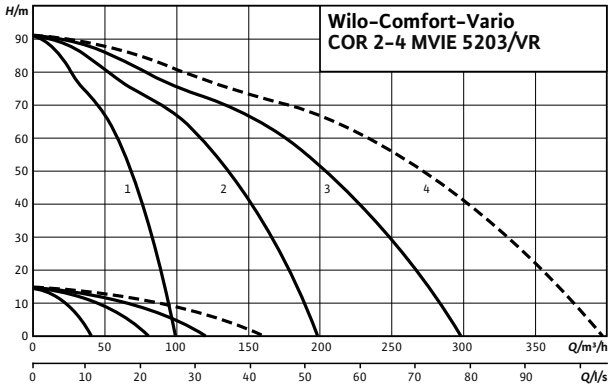

---- including standby pump

Note:
Potable water installations according to DIN 1988, part 5 must include a standby pump.

Selection with standby pump according to duty chart:

1 2-pump system
2 3-pump system
3 4-pump system
4 Select system with next largest pump

If a standby pump is not necessary, the duty chart number corresponds to the number of pumps needed to achieve the calculated maximum system output.

Motor data per pump

Wilo-Comfort-Vario COR-2-4...	Nominal motor power	Nominal current 3~400 V, 50 Hz	Motor efficiency		
	P_2	I_N	$\eta_{m\ 50\%}$	$\eta_{m\ 75\%}$	$\eta_{m\ 100\%}$
	kW	A	%		
MVIE 5203/VR	15	25.4	90.6	91.1	90.7

Motor efficiency based on 400 V, 50 Hz

Technical data Wilo-Comfort-Vario COR MVIE.../VR

Dimension drawing

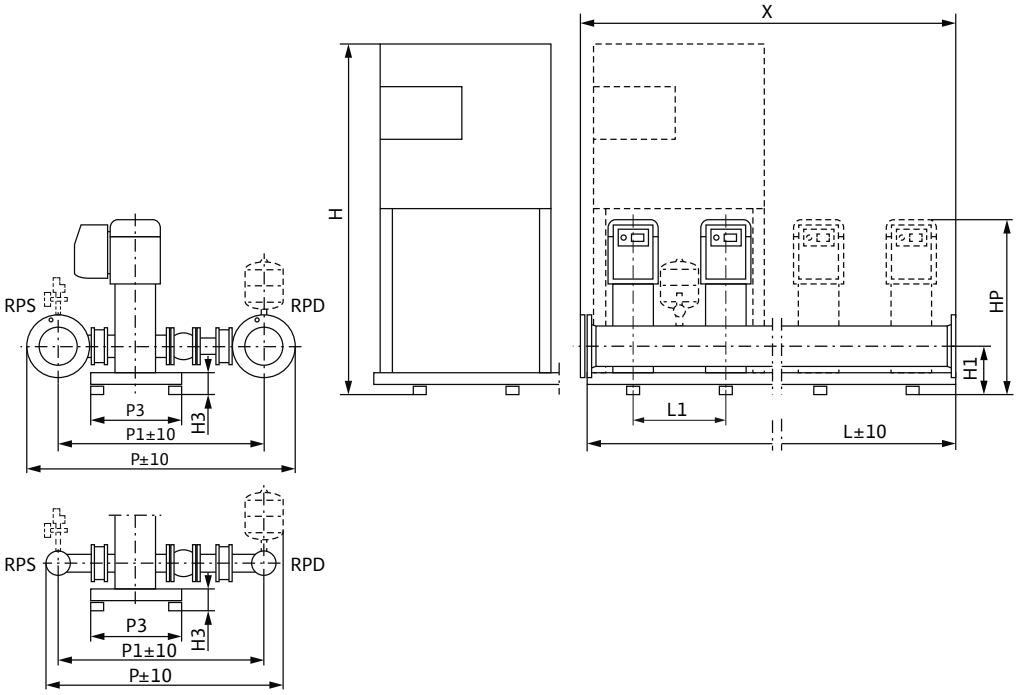

Sample systems are shown. Switchbox position depends on pump height.
Accessories (to be ordered separately): Optional WMS low-water cut-out switchgear kit
Installation surface: flat and horizontal
Installation location: dry, well ventilated and frost-proof

Dimensions, weights

Wilo-Comfort-Vario COR-2-4...	Nominal diameters of the pipe connections on suction side	Nominal diameters of pipe connections on the pressure side	Dimensions										Weight approx.
	RPS	*RPD*	*H*	*H1*	*H3*	*HP*	*L*	*L1*	*P*	*P1*	*P3*	*X*	*m*
			mm										kg
2MVIE 5203/VR	DN 150	DN 150	1350	230	125	1169	1700	500	1310	1022	500	1000	695
3MVIE 5203/VR	DN 150	DN 150	1705	230	125	1169	2200	500	1310	1022	500	1500	1031
4MVIE 5203/VR	DN 150	DN 150	1705	230	125	1169	2700	500	1310	1022	500	2000	1366

Technical data Wilo-Comfort-Vario COR MVIE.../VR

Pump curves

Wilo-Comfort-Vario COR-2 - COR-4 MVIE 5204/VR

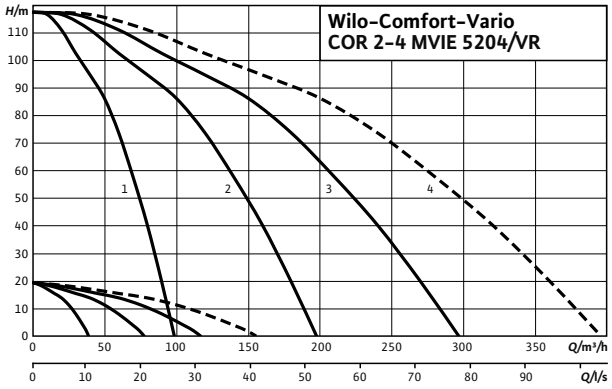

---- including standby pump

Note:
Potable water installations according to DIN 1988, part 5 must include a standby pump.

Selection with standby pump according to duty chart:

1 2-pump system
2 3-pump system
3 4-pump system
4 Select system with next largest pump

If a standby pump is not necessary, the duty chart number corresponds to the number of pumps needed to achieve the calculated maximum system output.

Motor data per pump

Wilo-Comfort-Vario COR-2-4...	Nominal motor power	Nominal current 3~400 V, 50 Hz	Motor efficiency		
	P_2	I_N	$\eta_{m\ 50\%}$	$\eta_{m\ 75\%}$	$\eta_{m\ 100\%}$
	kW	A	%		
MVIE 5204/VR	18.5	33.6	89.4	90.6	91.1

Motor efficiency based on 400 V, 50 Hz

Technical data Wilo-Comfort-Vario COR MVIE.../VR

Dimension drawing

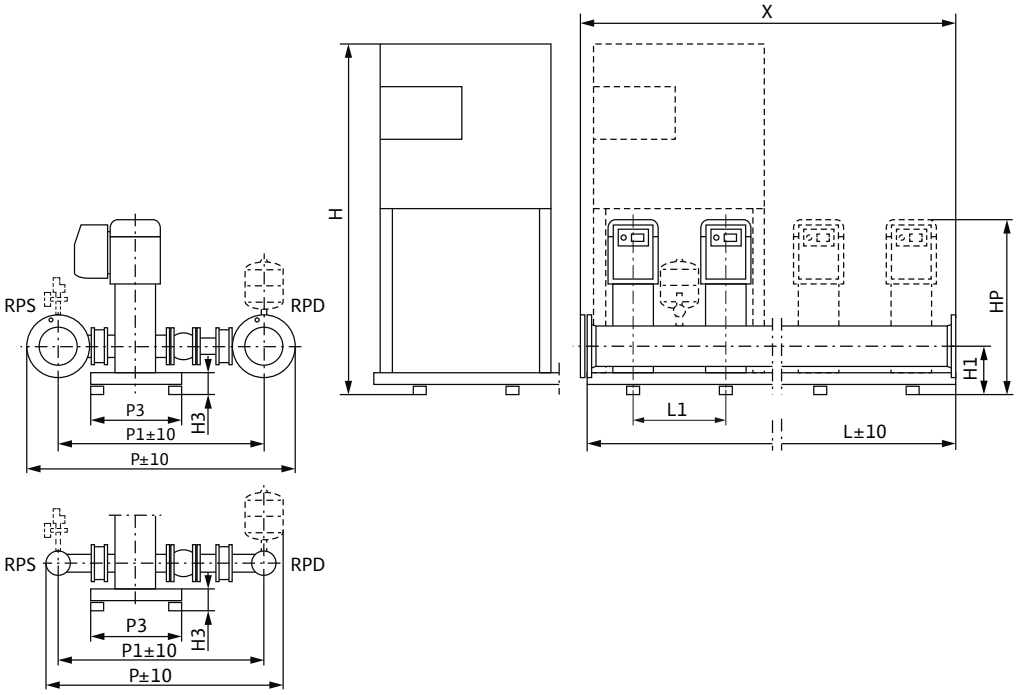

Sample systems are shown. Switchbox position depends on pump height.
Accessories (to be ordered separately): Optional WMS low-water cut-out switchgear kit
Installation surface: flat and horizontal
Installation location: dry, well ventilated and frost-proof

Dimensions, weights

Wilo-Comfort-Vario COR-2-4...	Nominal diameters of the pipe connections on suction side	Nominal diameters of pipe connections on the pressure side	Dimensions										Weight approx.
	RPS	*RPD*	*H*	*H1*	*H3*	*HP*	*L*	*L1*	*P*	*P1*	*P3*	*X*	*m*
			mm										kg
2MVIE 5204/VR	DN 150	DN 150	1350	230	125	1268	1700	500	1310	1022	500	1000	789
3MVIE 5204/VR	DN 150	DN 150	1705	230	125	1268	2200	500	1310	1022	500	1500	1172
4MVIE 5204/VR	DN 150	DN 150	1705	230	125	1268	2700	500	1310	1022	500	2000	1554

Technical data Wilo-Comfort-Vario COR MVIE.../VR

Pump curves

Wilo-Comfort-Vario COR-2 - COR-4 MVIE 5205/VR

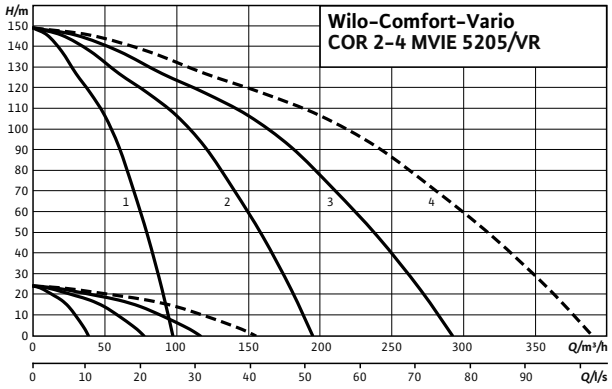

---- including standby pump

Note:
Potable water installations according to DIN 1988, part 5 must include a standby pump.

Selection with standby pump according to duty chart:

1 2-pump system
2 3-pump system
3 4-pump system
4 Select system with next largest pump

If a standby pump is not necessary, the duty chart number corre-sponds to the number of pumps needed to achieve the calculated maximum system output.

Motor data per pump

Wilo-Comfort-Vario COR-2-4...	Nominal motor power	Nominal current 3~400 V, 50 Hz	Motor efficiency		
	P_2	I_N	$\eta_{m\ 50\%}$	$\eta_{m\ 75\%}$	$\eta_{m\ 100\%}$
	kW	A	%		
MVIE 5205/VR	22	43.9	86.8	89.7	91.0

Motor efficiency based on 400 V, 50 Hz

Technical data Wilo-Comfort-Vario COR MVIE.../VR

Dimension drawing

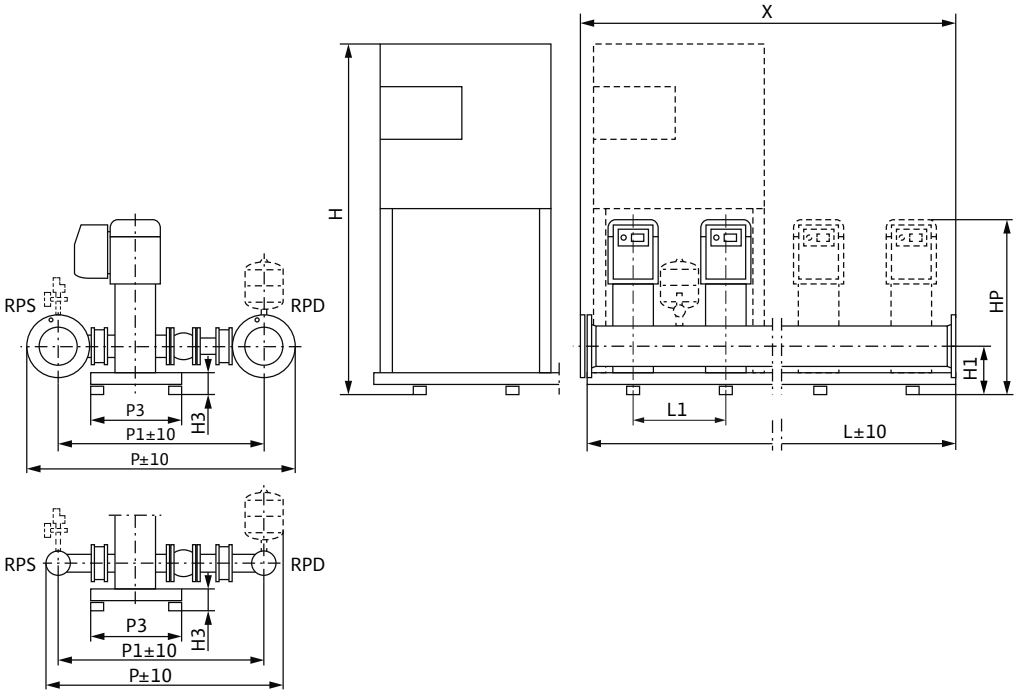

Sample systems are shown. Switchbox position depends on pump height.
Accessories (to be ordered separately): Optional WMS low-water cut-out switchgear kit
Installation surface: flat and horizontal
Installation location: dry, well ventilated and frost-proof

Dimensions, weights

Wilo-Comfort-Vario COR-2-4...	Nominal diameters of the pipe connections on suction side	Nominal diameters of pipe connections on the pressure side	Dimensions										Weight approx.
	RPS	*RPD*	*H*	*H1*	*H3*	*HP*	*L*	*L1*	*P*	*P1*	*P3*	*X*	*m*
			mm										kg
2MVIE 5205/VR	DN 150	DN 150	1350	230	125	1417	1700	500	1310	1022	500	1000	859
3MVIE 5205/VR	DN 150	DN 150	1705	230	125	1417	2200	500	1310	1022	500	1500	1277
4MVIE 5205/VR	DN 150	DN 150	1705	230	125	1417	2700	500	1310	1022	500	2000	1694

Technical data Wilo-Comfort-Vario COR MVIE.../VR

Pump curves

Wilo-Comfort-Vario COR-2 - COR-4 MVIE 7002/VR

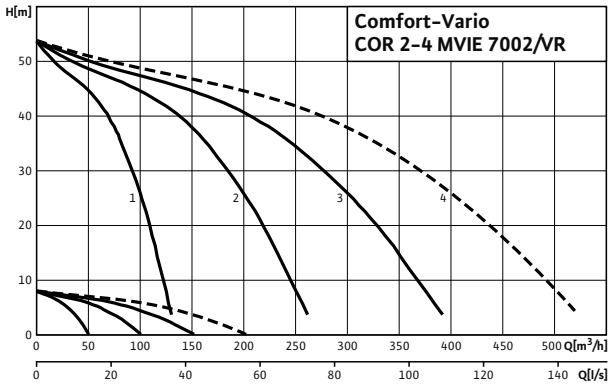

---- including standby pump

Note:
Potable water installations according to DIN 1988, part 5 must include a standby pump.

Selection with standby pump according to duty chart:

1 2-pump system
2 3-pump system
3 4-pump system
4 Select system with next largest pump

If a standby pump is not necessary, the duty chart number corresponds to the number of pumps needed to achieve the calculated maximum system output.

Motor data per pump

Wilo-Comfort-Vario COR-2-4...	Nominal motor power	Nominal current 3~400 V, 50 Hz	Motor efficiency		
	P_2	I_N	$\eta_{m\ 50\%}$	$\eta_{m\ 75\%}$	$\eta_{m\ 100\%}$
	kW	A	%		
MVIE 7002/VR	11	21.2	88.8	90.2	90.5

Motor efficiency based on 400 V, 50 Hz

Technical data Wilo-Comfort-Vario COR MVIE.../VR

Dimension drawing

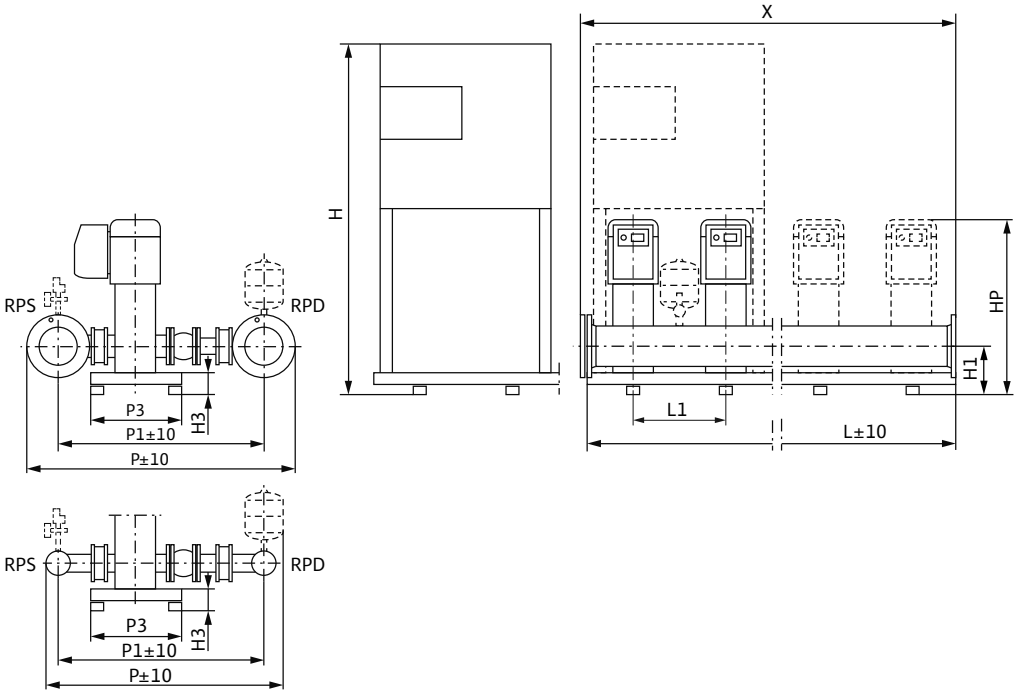

Sample systems are shown. Switchbox position depends on pump height.
Accessories (to be ordered separately): Optional WMS low-water cut-out switchgear kit
Installation surface: flat and horizontal
Installation location: dry, well ventilated and frost-proof

Dimensions, weights

Wilo-Comfort-Vario COR-2-4...	Nominal diameters of the pipe connections on suction side	Nominal diameters of pipe connections on the pressure side	Dimensions										Weight approx.
	RPS	*RPD*	*H*	*H1*	*H3*	*HP*	*L*	*L1*	*P*	*P1*	*P3*	*X*	*m*
			mm										kg
2MVIE 7002/VR	DN 200	DN 200	1708	268	128	1335	1700	500	1640	1300	650	1000	787
3MVIE 7002/VR	DN 200	DN 200	1708	268	128	1335	2200	500	1640	1300	650	1500	1106
4MVIE 7002/VR	DN 200	DN 200	1708	268	128	1335	2700	500	1640	1300	650	2000	1456

Technical data Wilo-Comfort-Vario COR MVIE.../VR

Pump curves

Wilo-Comfort-Vario COR-2 - COR-4 MVIE 7003/1/VR

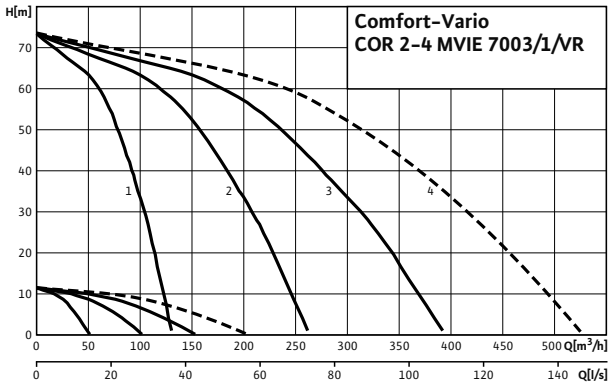

---- including standby pump

Note:
Potable water installations according to DIN 1988, part 5 must include a standby pump.

Selection with standby pump according to duty chart:

1 2-pump system
2 3-pump system
3 4-pump system
4 Select system with next largest pump

If a standby pump is not necessary, the duty chart number corre-sponds to the number of pumps needed to achieve the calculated maximum system output.

Motor data per pump

Wilo-Comfort-Vario COR-2-4...	Nominal motor power	Nominal current 3~400 V, 50 Hz	Motor efficiency		
	P_2	I_N	$\eta_{m\ 50\%}$	$\eta_{m\ 75\%}$	$\eta_{m\ 100\%}$
	kW	A	%		
MVIE 7003/1/VR	15	25.4	90.6	91.1	90.7

Motor efficiency based on 400 V, 50 Hz

Technical data Wilo-Comfort-Vario COR MVIE.../VR

Dimension drawing

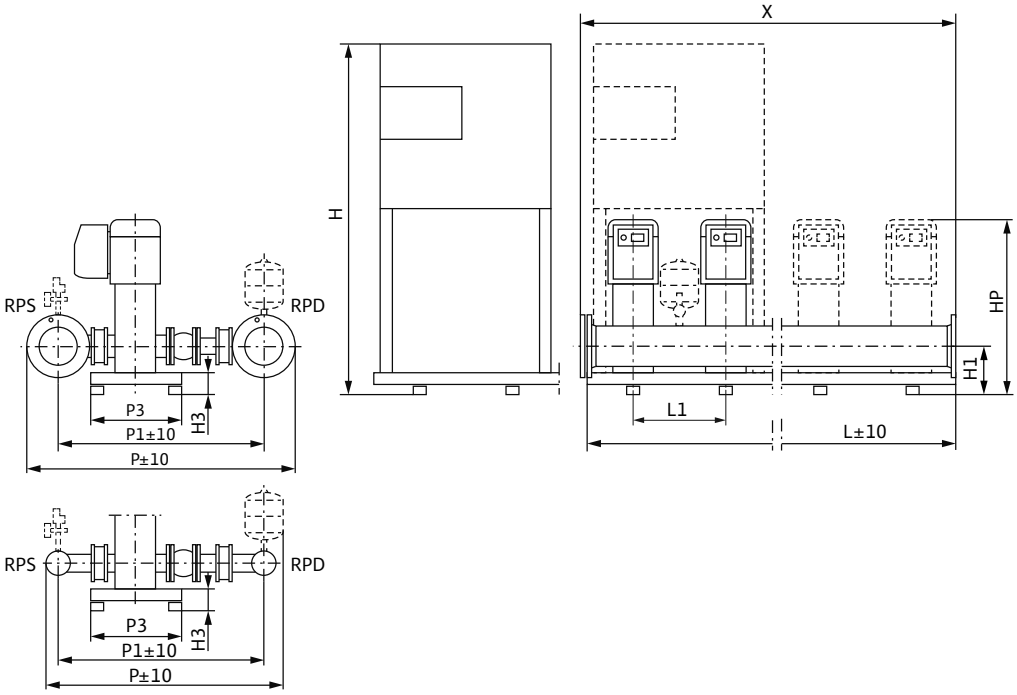

Sample systems are shown. Switchbox position depends on pump height.
Accessories (to be ordered separately): Optional WMS low-water cut-out switchgear kit
Installation surface: flat and horizontal
Installation location: dry, well ventilated and frost-proof

Dimensions, weights

Wilo-Comfort-Vario COR-2-4...	Nominal diameters of the pipe connections on suction side	Nominal diameters of pipe connections on the pressure side	Dimensions										Weight approx.
	RPS	*RPD*	*H*	*H1*	*H3*	*HP*	*L*	*L1*	*P*	*P1*	*P3*	*X*	*m*
			mm										kg
2MVIE 7003/1/VR	DN 200	DN 200	1708	268	128	1431	1700	500	1640	1300	650	1000	857
3MVIE 7003/1/VR	DN 200	DN 200	1708	268	128	1431	2200	500	1640	1300	650	1500	1235
4MVIE 7003/1/VR	DN 200	DN 200	1708	268	128	1431	2700	500	1640	1300	650	2000	1589

Technical data Wilo-Comfort-Vario COR MVIE.../VR

Pump curves

Wilo-Comfort-Vario COR-2 - COR-4 MVIE 7004/2/VR

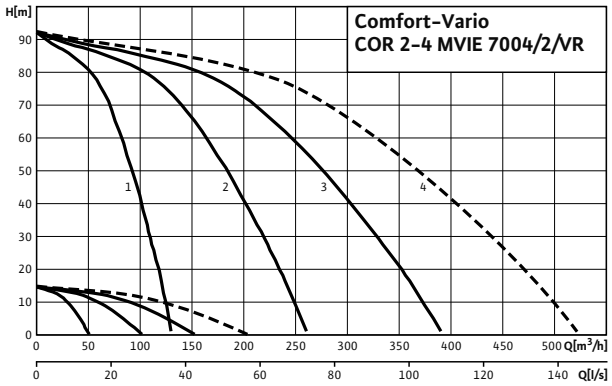

---- including standby pump

Note:
Potable water installations according to DIN 1988, part 5 must include a standby pump.

Selection with standby pump according to duty chart:

1 2-pump system
2 3-pump system
3 4-pump system
4 Select system with next largest pump

If a standby pump is not necessary, the duty chart number corresponds to the number of pumps needed to achieve the calculated maximum system output.

Motor data per pump

Wilo-Comfort-Vario COR-2-4...	Nominal motor power	Nominal current 3~400 V, 50 Hz	Motor efficiency		
	P_2	I_N	$\eta_{m\ 50\%}$	$\eta_{m\ 75\%}$	$\eta_{m\ 100\%}$
	kW	A	%		
MVIE 7004/2/VR	18.5	33.6	89.4	90.6	91.1

Motor efficiency based on 400 V, 50 Hz

Technical data Wilo-Comfort-Vario COR MVIE.../VR

Dimension drawing

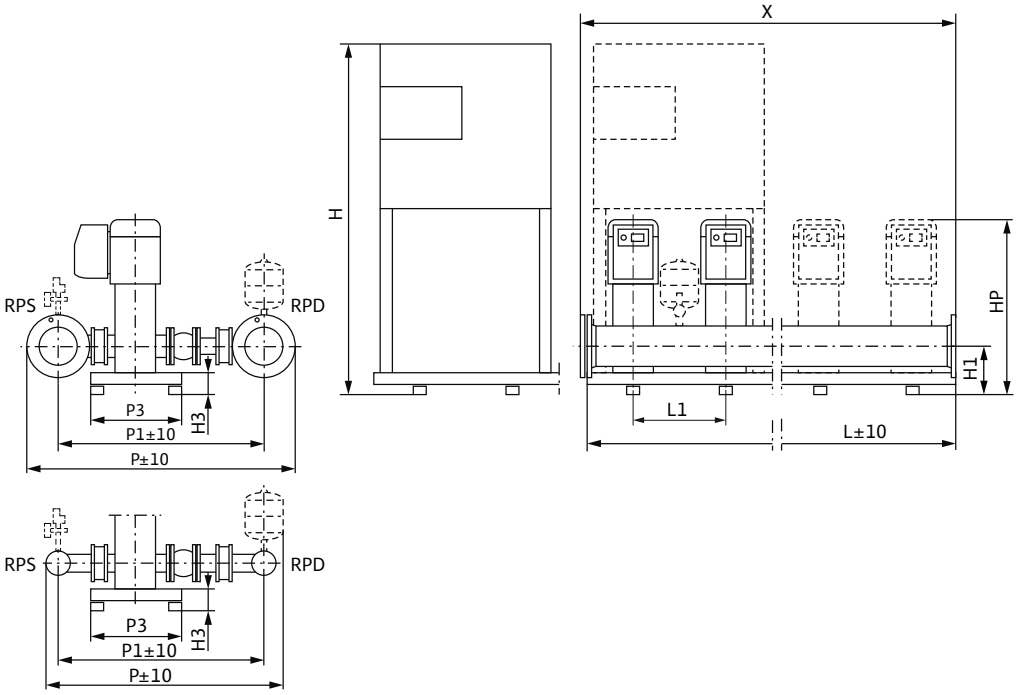

Sample systems are shown. Switchbox position depends on pump height.
Accessories (to be ordered separately): Optional WMS low-water cut-out switchgear kit
Installation surface: flat and horizontal
Installation location: dry, well ventilated and frost-proof

Dimensions, weights

Wilo-Comfort-Vario COR-2-4...	Nominal diameters of the pipe connections on suction side	Nominal diameters of pipe connections on the pressure side	Dimensions										Weight approx.
	RPS	*RPD*	*H*	*H1*	*H3*	*HP*	*L*	*L1*	*P*	*P1*	*P3*	*X*	*m*
			mm										kg
2MVIE 7004/2/VR	DN 200	DN 200	1708	268	128	1554	1700	500	1640	1300	650	1000	927
3MVIE 7004/2/VR	DN 200	DN 200	1708	268	128	1554	2200	500	1640	1300	650	1500	1340
4MVIE 7004/2/VR	DN 200	DN 200	1708	268	128	1554	2700	500	1640	1300	650	2000	1729

Technical data Wilo-Comfort-Vario COR MVIE.../VR

Pump curves

Wilo-Comfort-Vario COR-2 - COR-4 MVIE 7004/VR

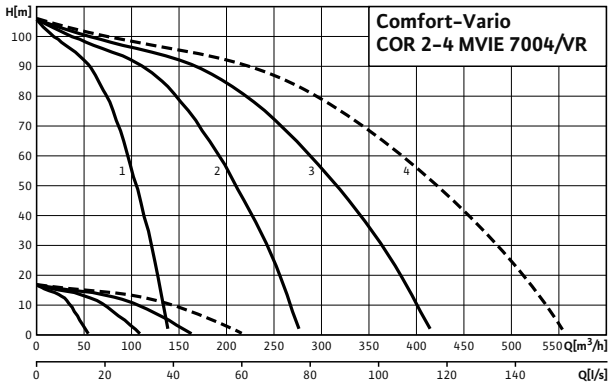

---- including standby pump

Note:
Potable water installations according to DIN 1988, part 5 must include a standby pump.

Selection with standby pump according to duty chart:

1 2-pump system
2 3-pump system
3 4-pump system
4 Select system with next largest pump

If a standby pump is not necessary, the duty chart number corresponds to the number of pumps needed to achieve the calculated maximum system output.

Motor data per pump

Wilo-Comfort-Vario COR-2-4...	Nominal motor power	Nominal current 3~400 V, 50 Hz	Motor efficiency		
	P_2	I_N	$\eta_{m\ 50\%}$	$\eta_{m\ 75\%}$	$\eta_{m\ 100\%}$
	kW	A	%		
MVIE 7004/VR	22	43.9	86.8	89.7	91.0

Motor efficiency based on 400 V, 50 Hz

Technical data Wilo-Comfort-Vario COR MVIE.../VR

Dimension drawing

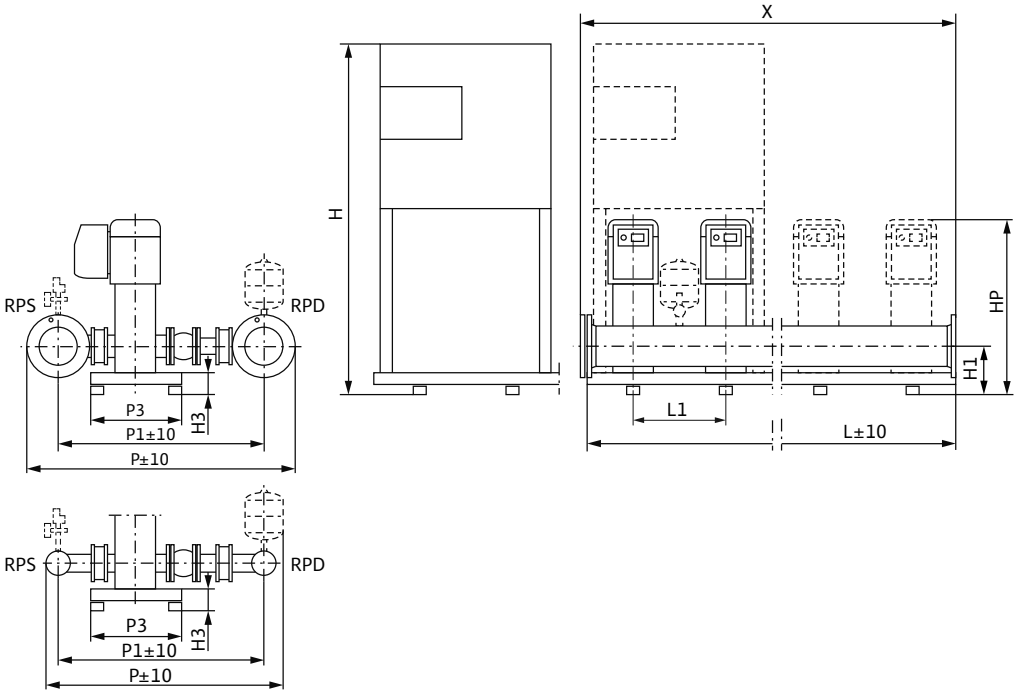

Sample systems are shown. Switchbox position depends on pump height.
Accessories (to be ordered separately): Optional WMS low-water cut-out switchgear kit
Installation surface: flat and horizontal
Installation location: dry, well ventilated and frost-proof

Dimensions, weights

Wilo-Comfort-Vario COR-2-4...	Nominal diameters of the pipe connections on suction side	Nominal diameters of pipe connections on the pressure side	Dimensions										Weight approx.
	RPS	*RPD*	*H*	*H1*	*H3*	*HP*	*L*	*L1*	*P*	*P1*	*P3*	*X*	*m*
			mm										kg
2MVIE 7004/VR	DN 200	DN 200	1708	268	128	1580	1700	500	1640	1300	650	1000	989
3MVIE 7004/VR	DN 200	DN 200	1708	268	128	1580	2200	500	1640	1300	650	1500	1433
4MVIE 7004/VR	DN 200	DN 200	1708	268	128	1580	2700	500	1640	1300	650	2000	1854

Technical data Wilo-Comfort-Vario COR MVIE.../VR

Pump curves

Wilo-Comfort-Vario COR-2 - COR-4 MVIE 9501/VR

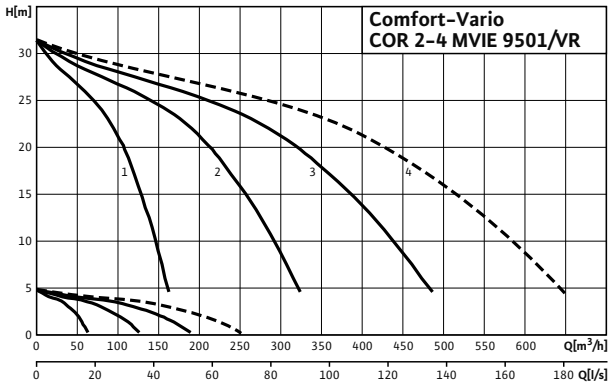

---- including standby pump

Note:
Potable water installations according to DIN 1988, part 5 must include a standby pump.

Selection with standby pump according to duty chart:

1 2-pump system
2 3-pump system
3 4-pump system
4 Select system with next largest pump

If a standby pump is not necessary, the duty chart number corresponds to the number of pumps needed to achieve the calculated maximum system output.

Motor data per pump

Wilo-Comfort-Vario COR-2-4...	Nominal motor power	Nominal current 3~400 V, 50 Hz	Motor efficiency		
	P_2	I_N	$\eta_{m\ 50\%}$	$\eta_{m\ 75\%}$	$\eta_{m\ 100\%}$
	kW	A	%		
MVIE 9501/VR	11	21.2	88.8	90.2	90.5

Motor efficiency based on 400 V, 50 Hz

Technical data Wilo-Comfort-Vario COR MVIE.../VR

Dimension drawing

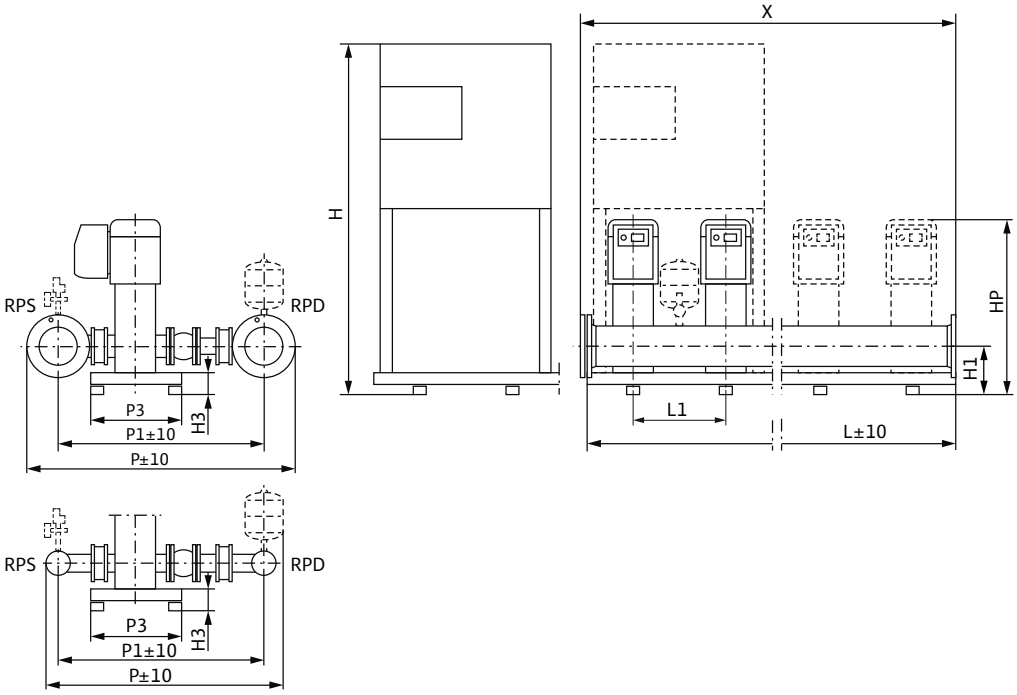

Sample systems are shown. Switchbox position depends on pump height.
Accessories (to be ordered separately): Optional WMS low-water cut-out switchgear kit
Installation surface: flat and horizontal
Installation location: dry, well ventilated and frost-proof

Dimensions, weights

Wilo-Comfort-Vario COR-2-4...	Nominal diameters of the pipe connections on suction side	Nominal diameters of pipe connections on the pressure side	Dimensions										Weight approx.
	RPS	*RPD*	*H*	*H1*	*H3*	*HP*	*L*	*L1*	*P*	*P1*	*P3*	*X*	*m*
			mm										kg
2MVIE 9501/VR	DN 200	DN 200	1708	268	128	1263	1700	500	1640	1300	650	1000	780
3MVIE 9501/VR	DN 200	DN 200	1708	268	128	1263	2200	500	1640	1300	650	1500	1096
4MVIE 9501/VR	DN 250	DN 250	1708	268	128	1263	2700	500	1695	1300	650	2000	1487

Technical data Wilo-Comfort-Vario COR MVIE.../VR

Pump curves

Wilo-Comfort-Vario COR-2 - COR-4 MVIE 9502/1/VR

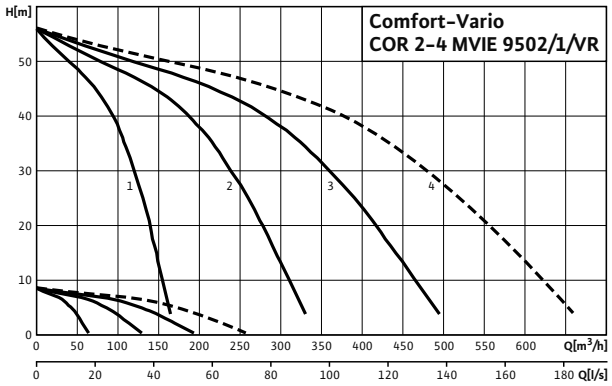

---- including standby pump

Note:
Potable water installations according to DIN 1988, part 5 must include a standby pump.

Selection with standby pump according to duty chart:

1 2-pump system
2 3-pump system
3 4-pump system
4 Select system with next largest pump

If a standby pump is not necessary, the duty chart number corresponds to the number of pumps needed to achieve the calculated maximum system output.

Motor data per pump

Wilo-Comfort-Vario COR-2-4...	Nominal motor power	Nominal current 3~400 V, 50 Hz	Motor efficiency		
	P_2	I_N	$\eta_{m\ 50\%}$	$\eta_{m\ 75\%}$	$\eta_{m\ 100\%}$
	kW	A	%		
MVIE 9502/1/VR	15	25.4	90.6	91.1	90.7

Motor efficiency based on 400 V, 50 Hz

Technical data Wilo-Comfort-Vario COR MVIE.../VR

Dimension drawing

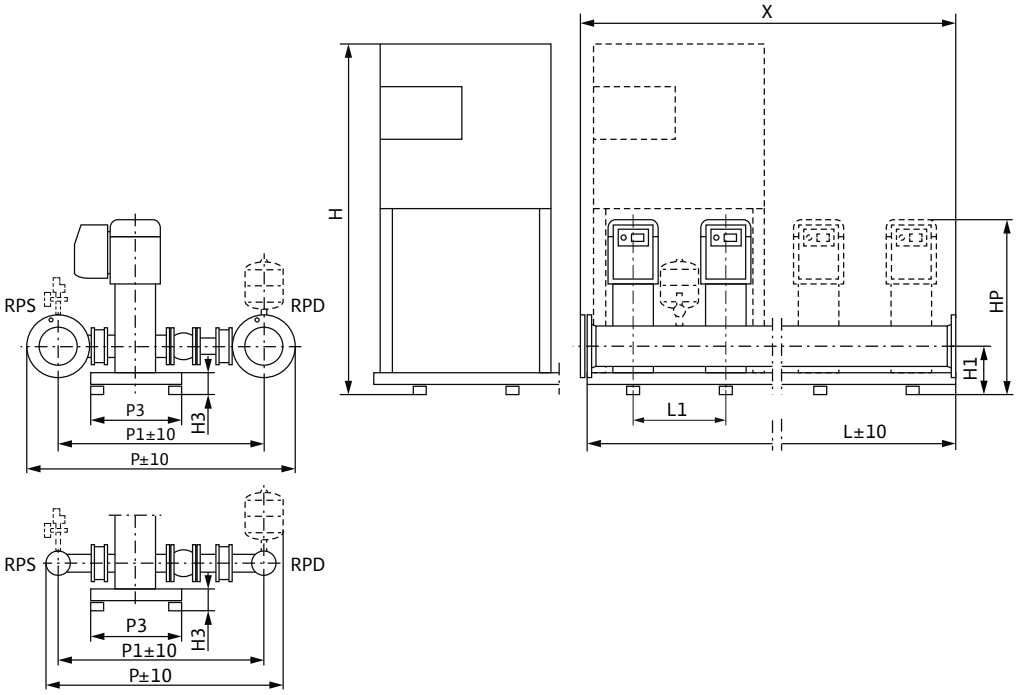

Sample systems are shown. Switchbox position depends on pump height.
Accessories (to be ordered separately): Optional WMS low-water cut-out switchgear kit
Installation surface: flat and horizontal
Installation location: dry, well ventilated and frost-proof

Dimensions, weights

Wilo-Comfort-Vario COR-2-4...	Nominal diameters of the pipe connections on suction side	Nominal diameters of pipe connections on the pressure side	Dimensions										Weight approx.
	RPS	*RPD*	*H*	*H1*	*H3*	*HP*	*L*	*L1*	*P*	*P1*	*P3*	*X*	*m*
			mm										kg
2MVIE 9502/1/VR	DN 200	DN 200	1708	268	128	1372	1700	500	1640	1300	650	1000	853
3MVIE 9502/1/VR	DN 200	DN 200	1708	268	128	1372	2200	500	1640	1300	650	1500	1229
4MVIE 9502/1/VR	DN 250	DN 250	1708	268	128	1372	2700	500	1695	1300	650	2000	1626

Technical data Wilo-Comfort-Vario COR MVIE.../VR

Pump curves

Wilo-Comfort-Vario COR-2 - COR-4 MVIE 9502/VR

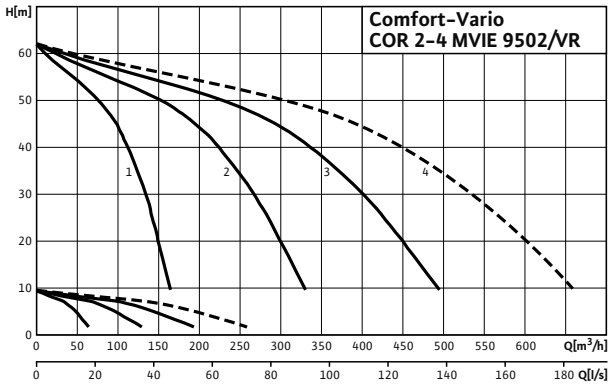

---- including standby pump

Note:
Potable water installations according to DIN 1988, part 5 must include a standby pump.

Selection with standby pump according to duty chart:

1 2-pump system
2 3-pump system
3 4-pump system
4 Select system with next largest pump

If a standby pump is not necessary, the duty chart number corresponds to the number of pumps needed to achieve the calculated maximum system output.

Motor data per pump

Wilo-Comfort-Vario COR-2-4...	Nominal motor power	Nominal current 3~400 V, 50 Hz	Motor efficiency		
	P_2	I_N	$\eta_{m\ 50\%}$	$\eta_{m\ 75\%}$	$\eta_{m\ 100\%}$
	kW	A	%		
MVIE 9502/VR	18.5	33.6	89.4	90.6	91.1

Motor efficiency based on 400 V, 50 Hz

Technical data Wilo-Comfort-Vario COR MVIE.../VR

Dimension drawing

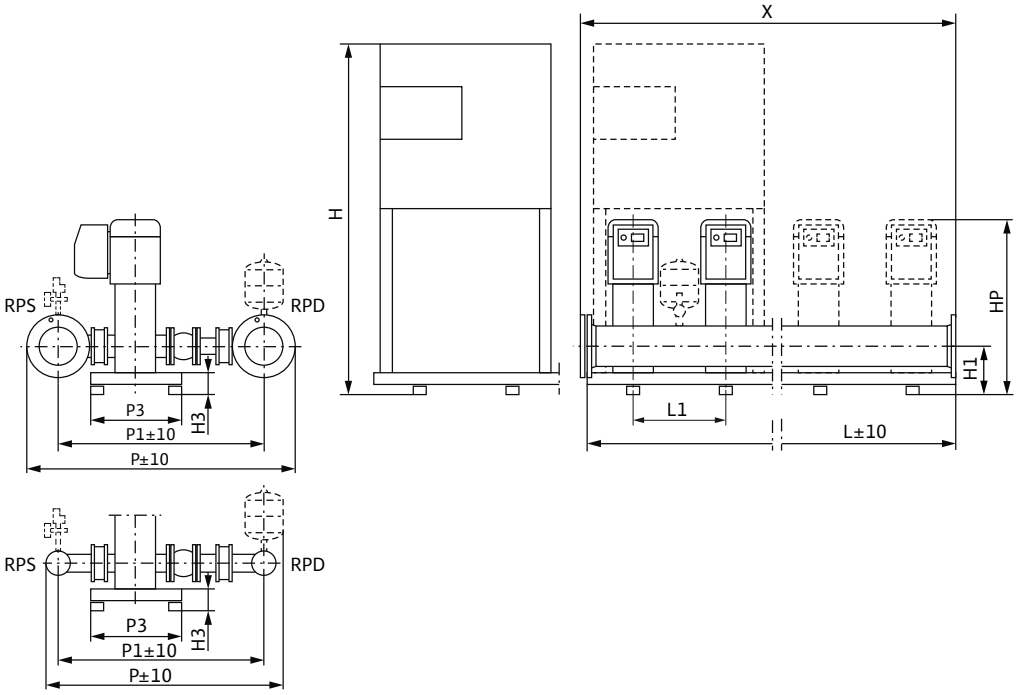

Sample systems are shown. Switchbox position depends on pump height.
Accessories (to be ordered separately): Optional WMS low-water cut-out switchgear kit
Installation surface: flat and horizontal
Installation location: dry, well ventilated and frost-proof

Dimensions, weights

Wilo-Comfort-Vario COR-2-4...	Nominal diameters of the pipe connections on suction side	Nominal diameters of pipe connections on the pressure side	Dimensions										Weight approx.
	RPS	*RPD*	*H*	*H1*	*H3*	*HP*	*L*	*L1*	*P*	*P1*	*P3*	*X*	*m*
			mm										kg
2MVIE 9502/VR	DN 200	DN 200	1708	268	128	1410	1700	500	1640	1300	650	1000	915
3MVIE 9502/VR	DN 200	DN 200	1708	268	128	1410	2200	500	1640	1300	650	1500	1322
4MVIE 9502/VR	DN 250	DN 250	1708	268	128	1410	2700	500	1695	1300	650	2000	1750

Technical data Wilo-Comfort-Vario COR MVIE.../VR

Pump curves

Wilo-Comfort-Vario COR-2 - COR-4 MVIE 9503/2/VR

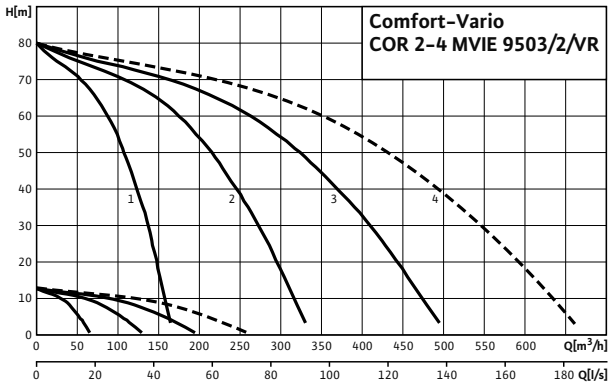

---- including standby pump

Note:
Potable water installations according to DIN 1988, part 5 must include a standby pump.

Selection with standby pump according to duty chart:

1 2-pump system
2 3-pump system
3 4-pump system
4 Select system with next largest pump

If a standby pump is not necessary, the duty chart number corre-sponds to the number of pumps needed to achieve the calculated maximum system output.

Motor data per pump

Wilo-Comfort-Vario COR-2-4...	Nominal motor power	Nominal current 3~400 V, 50 Hz	Motor efficiency		
	P_2	I_N	$\eta_{m\ 50\%}$	$\eta_{m\ 75\%}$	$\eta_{m\ 100\%}$
	kW	A	%		
MVIE 9503/2/VR	22	43.9	86.8	89.7	91.0

Motor efficiency based on 400 V, 50 Hz

Technical data Wilo-Comfort-Vario COR MVIE.../VR

Dimension drawing

Wilo-Comfort-Vario COR MVIE.../VR

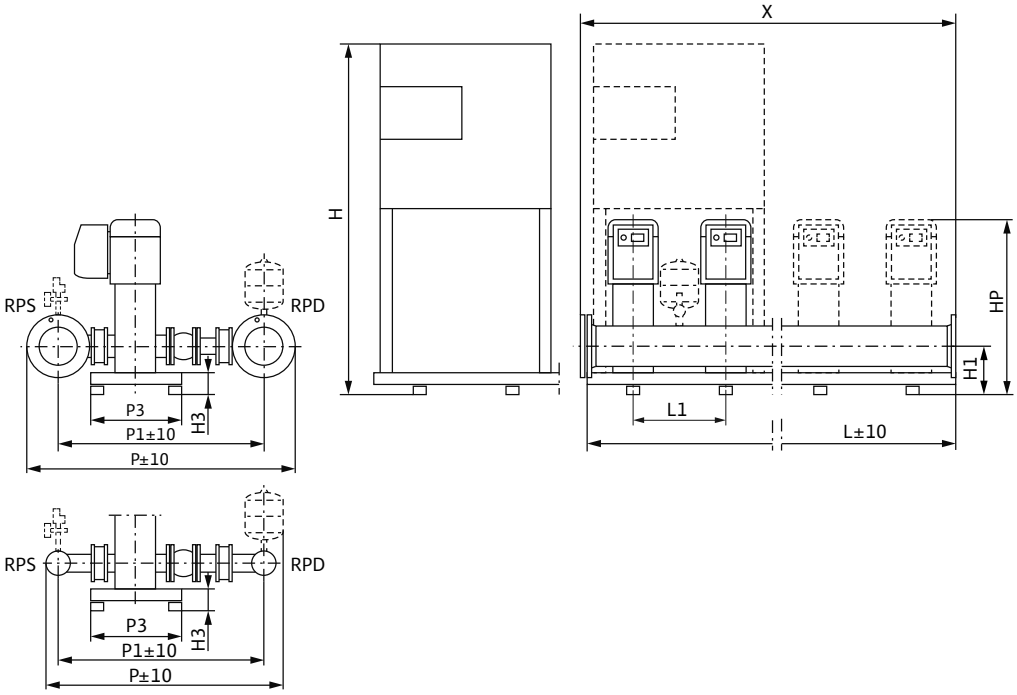

Sample systems are shown. Switchbox position depends on pump height.
Accessories (to be ordered separately): Optional WMS low-water cut-out switchgear kit
Installation surface: flat and horizontal
Installation location: dry, well ventilated and frost-proof

Dimensions, weights

Wilo-Comfort-Vario COR-2-4...	Nominal diameters of the pipe connections on suction side	Nominal diameters of pipe connections on the pressure side	Dimensions										Weight approx.
	RPS	*RPD*	*H*	*H1*	*H3*	*HP*	*L*	*L1*	*P*	*P1*	*P3*	*X*	*m*
			mm										kg
2MVIE 9503/2/VR	DN 200	DN 200	1708	268	128	1534	1700	500	1640	1300	650	1000	986
3MVIE 9503/2/VR	DN 200	DN 200	1708	268	128	1534	2200	500	1640	1300	650	1500	1428
4MVIE 9503/2/VR	DN 250	DN 250	1708	268	128	1534	2700	500	1695	1300	650	2000	1893

Pressure boosting

Multi-pump systems, speed-controlled

Series description Wilo-Comfort-N-Vario COR MVISE.../VR

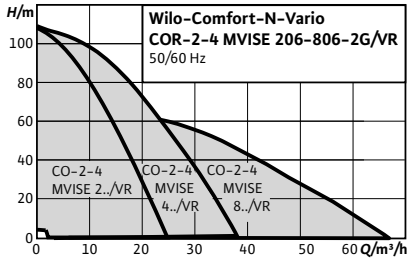

Design

Pressure boosting system with 2 to 4 parallel-switched, non-self-priming stainless steel high-pressure multistage centrifugal pumps with speed-controlled glandless pump motors

Type key

Example:	**Wilo-COR-3 MVISE 406/VR**
COR	Compact pressure boosting system with integrated speed control
3	Number of pumps
MVISE	Pump series
4	Rated volume flow of the single pump [m^3/h]
06	Number of single-pump stages
VR	Control unit; VR = Vario controller

Application

- Fully automatic water supply and pressure boosting in residential, commercial and public buildings, hotels, hospitals, department stores and industrial systems.
- Pumping of potable water and process water, cooling water, fire water (except for fire extinguishing systems in accordance with DIN14462) or other service waters that do not attack the materials used, neither chemically nor mechanically, and do not contain any abrasive or long-fibre constituents

Special features/product advantages

- System is virtually noise-free in operation due to 2-4 parallel-switched, glandless stainless steel high-pressure multistage centrifugal pumps with integrated, water-cooled frequency converter
- Up to 20 dB[A] quieter than conventional systems with comparable hydraulic output
- Control range of frequency converters from 20 to 50 Hz
- Operationally reliable through the use of the MVISE pump series with integrated dry-running detection and automatic deactivation in the event of low water

Technical data

- Mains connection 3~ 400 V ± 10 %, 50 Hz; 3~380/440 V ±10 %, 60 Hz (other versions on request)
- Max. fluid temperature 50 °C
- Max. ambient temperature 40 °C
- Operating pressure 16 bar
- Inlet pressure 6 bar
- Nominal connection diameters on discharge side R 2" - R 3"
- Nominal connection diameters on inlet side R 2" - R 3"
- Speed range 1100 - 2750 rpm
- Protection class IP 44
- Fuse protection on mains side [AC 3] according to motor power and EVU regulations
- Approved fluids (other fluids on request):
  - Cooling water
  - Potable and process water
  - Fire water
- Note on fluids: Approved fluids are generally waters which do not attack the materials used, neither chemically nor mechanically, and do not contain any abrasive or long-fibre constituents.

Equipment/function

- 2-4 pumps with glandless pump motors per system
- Infinitely variable control mode through the use of pumps with integrated frequency converters
- Components that come in contact with fluid are corrosion-resistant
- Galvanised base frame with height-adjustable vibration absorber for insulation against structure-borne noise
- Pipework made of stainless steel 1.4571
- Check valve at each pump, on the suction and pressure side
- Non-return valve, on the pressure side
- Diaphragm pressure vessel 8 l, PN16, pressure side
- Pressure sensor, discharge side
- Optional pressure gauge (suction side)
- Pressure gauge (discharge side)
- Optional low-water cut-out switchgear

Materials

- Impellers 1.4301 stainless steel
- Stage chambers 1.4301 stainless steel
- Pump housing 1.4301 stainless steel
- Shaft 1.4122 stainless steel
- Seals EPDM (EP851)
- Housing cover made of 1.4301 stainless steel
- Lower housing section stainless steel 1.4301
- Pressure shroud 1.4301 stainless steel
- Bearing made of carbon, synthetic resin-impregnated
- Pump base EN-GJL-250
- Pipework made of 1.4571 stainless steel

Series description Wilo-Comfort-N-Vario COR MVISE.../VR

Description/design

- Base frame: galvanised and provided with height-adjustable vibration absorbers for comprehensive insulation against structure-borne noise; other versions on request
- Pipework: complete pipework made of stainless steel, suitable for the connection of all piping materials used in building services; the pipework is dimensioned according to the overall hydraulic performance of the pressure boosting system
- Pumps: 2 to 4 pumps from the MVISE 2.., 4.., 8.. series switched in parallel are used; adapted frequency converters on the pump motor enable continuous auto control for all pumps of these series; all pump components in contact with fluid are made of stainless steel
- Valves: each pump is fitted on the suction and pressure side with a check valve with DVGW approval mark or annular shut-off valves and a pressure-side DVGW-approved non-return valve
- Diaphragm pressure vessel: 8 l/PN 16 located on the discharge side with a butyl rubber diaphragm, completely safe in accordance with food safety laws; for testing and inspection purposes, with shut-off ball cock, with drain and throughflow fitting according to DIN 4807
- Pressure sensor: 4 to 20 mA, located on the discharge side for activating the central Comfort-Vario-Controller
- Pressure display: suction- and discharge-side pressure gauge (ø 63 mm); additional digital display of discharge pressure in the alphanumeric LCD display of the Comfort-Vario-Controller
- Controller: the system is standard-equipped with a VR Vario controller

Scope of delivery

- Factory-mounted, connection-ready pressure boosting system checked for functionality and impermeability
- Packaging
- Installation and operating instructions

Electrical connection

3~400 V

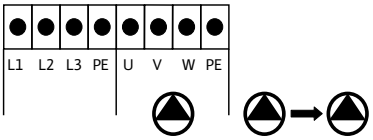

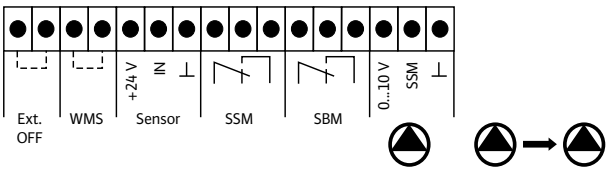

Technical data Wilo-Comfort-N-Vario COR MVISE.../VR

Pump curves

Wilo-Comfort-N-Vario COR-2 - COR-4 MVISE 206/VR

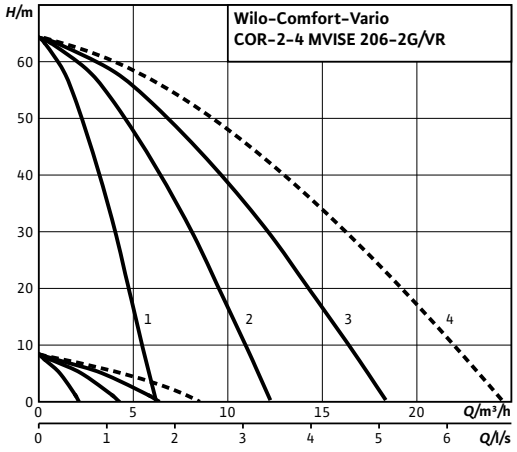

---- including standby pump

Note:
Potable water installations according to DIN 1988, part 5 must include a standby pump.

Selection with standby pump according to duty chart:

1 2-pump system
2 3-pump system
3 4-pump system
4 Select system with next largest pump

If a standby pump is not necessary, the duty chart number corresponds to the number of pumps needed to achieve the calculated maximum system output.

Motor data per pump			
Wilo-Comfort-N-Vario COR-2-4...	**Power consumption**	**Nominal motor power**	**Nominal current 3~400 V, 50 Hz**
	P_1	P_2	I_N
	kW		A
MVISE 206/VR	1.42	1.1	4.2

Technical data Wilo-Comfort-N-Vario COR MVISE.../VR

Dimension drawing

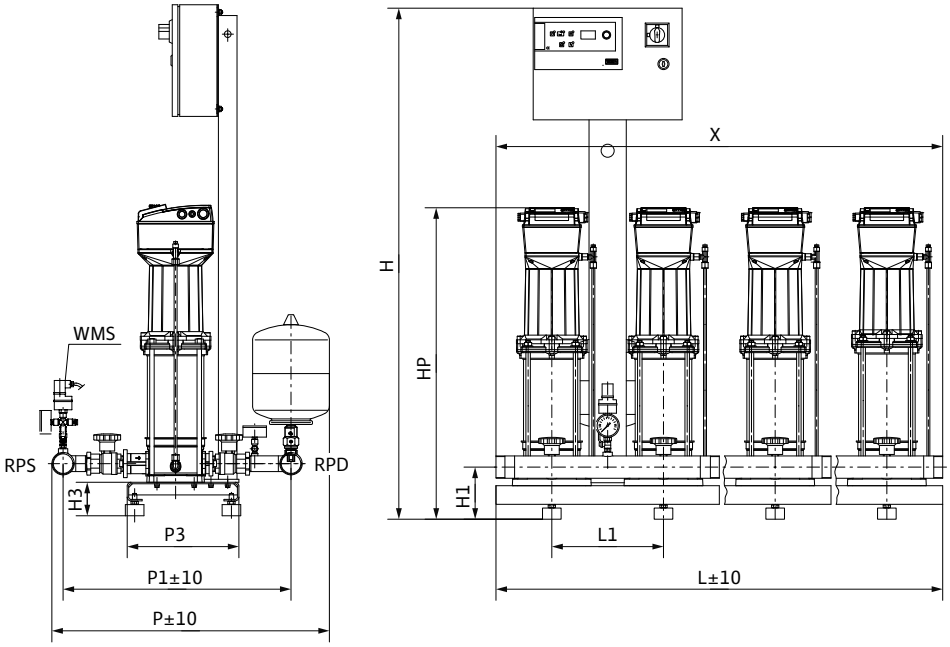

Sample systems are shown.
Accessories (to be ordered separately): Optional WMS low-water cut-out switchgear kit
Installation surface: flat and horizontal
Installation location: dry, well ventilated and frost-proof

Dimensions, weights

Wilo-Comfort-N-Vario COR-2-4...	Nominal diameters of the pipe connections on suction side	Nominal diameters of pipe connections on the pressure side	Dimensions										Weight approx.
	RPS	*RPD*	*H*	*H1*	*H3*	*HP*	*L*	*L1*	*P*	*P1*	*P3*	*X*	*m*
			mm										kg
2MVISE 206/VR	R 2	R 2	1375	140	90	720	600	300	750	613	300	600	94
3MVISE 206/VR	R 2	R 2	1375	140	90	720	900	300	750	613	300	900	135
4MVISE 206/VR	R 2	R 2	1375	140	90	720	1200	300	750	613	300	1200	175

Technical data Wilo-Comfort-N-Vario COR MVISE.../VR

Pump curves

Wilo-Comfort-N-Vario COR-2 - COR-4 MVISE 210/VR

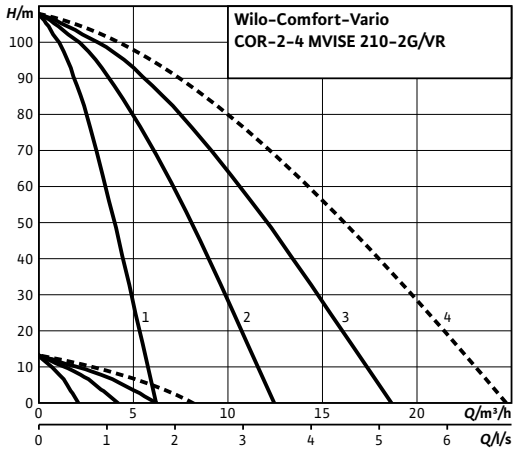

---- including standby pump

Note:
Potable water installations according to DIN 1988, part 5 must include a standby pump.

Selection with standby pump according to duty chart:

1 2-pump system
2 3-pump system
3 4-pump system
4 Select system with next largest pump

If a standby pump is not necessary, the duty chart number corresponds to the number of pumps needed to achieve the calculated maximum system output.

Motor data per pump			
Wilo-Comfort-N-Vario COR-2-4...	**Power consumption**	**Nominal motor power**	**Nominal current 3~400 V, 50 Hz**
	P_1	P_2	I_N
	kW		A
MVISE 210/VR	2.28	2.2	6.5

Technical data Wilo-Comfort-N-Vario COR MVISE.../VR

Dimension drawing

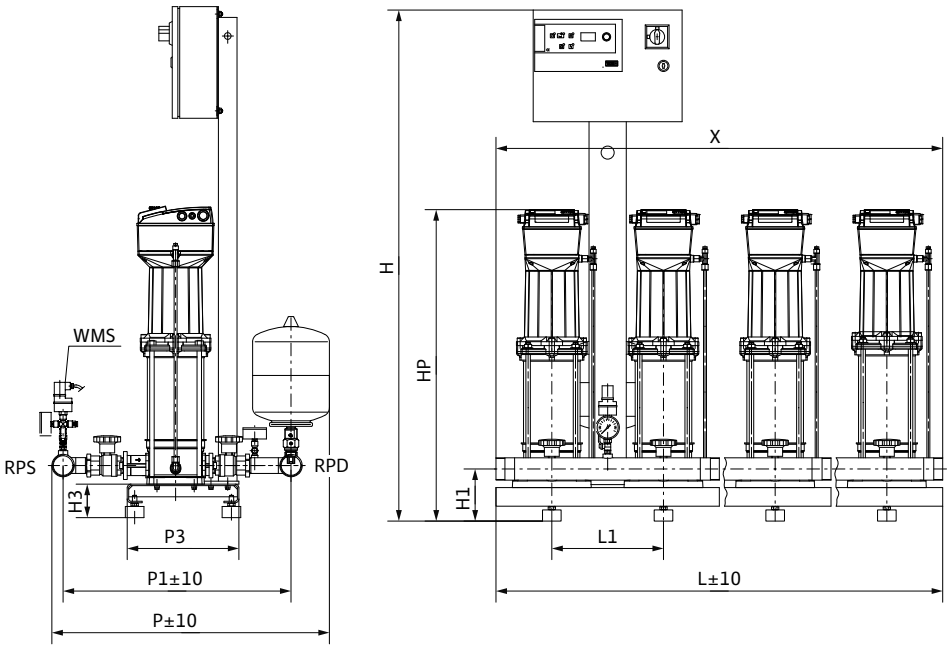

Sample systems are shown.
Accessories (to be ordered separately): Optional WMS low-water cut-out switchgear kit
Installation surface: flat and horizontal
Installation location: dry, well ventilated and frost-proof

Dimensions, weights

Wilo-Comfort-N-Vario COR-2-4...	Nominal diameters of the pipe connections on suction side	Nominal diameters of pipe connections on the pressure side	Dimensions										Weight approx.
	RPS	*RPD*	*H*	*H1*	*H3*	*HP*	*L*	*L1*	*P*	*P1*	*P3*	*X*	*m*
			mm										kg
2MVISE 210/VR	R 2	R 2	1375	140	90	846	600	300	750	613	300	600	106
3MVISE 210/VR	R 2	R 2	1375	140	90	846	900	300	750	613	300	900	153
4MVISE 210/VR	R 2	R 2	1375	140	90	846	1200	300	750	613	300	1200	199

Technical data Wilo-Comfort-N-Vario COR MVISE.../VR

Pump curves

Wilo-Comfort-N-Vario COR-2 - COR-4 MVISE 404VR

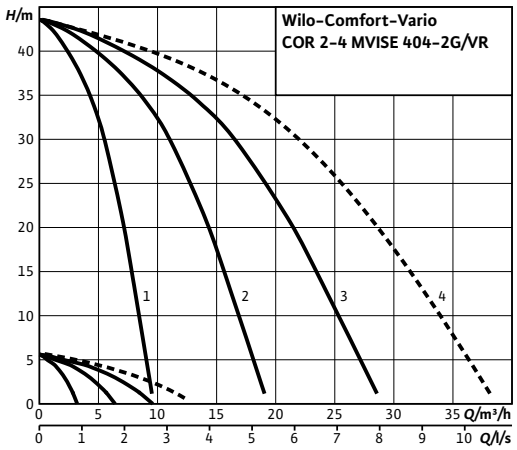

---- including standby pump

Note:
Potable water installations according to DIN 1988, part 5 must include a standby pump.

Selection with standby pump according to duty chart:

1 2-pump system
2 3-pump system
3 4-pump system
4 Select system with next largest pump

If a standby pump is not necessary, the duty chart number corresponds to the number of pumps needed to achieve the calculated maximum system output.

Motor data per pump

Wilo-Comfort-N-Vario COR-2-4...	Power consumption	Nominal motor power	Nominal current 3~400 V, 50 Hz
	P_1	P_2	I_N
	kW		A
MVISE 404/VR	1.4	1.1	4.2

Technical data Wilo-Comfort-N-Vario COR MVISE.../VR

Dimension drawing

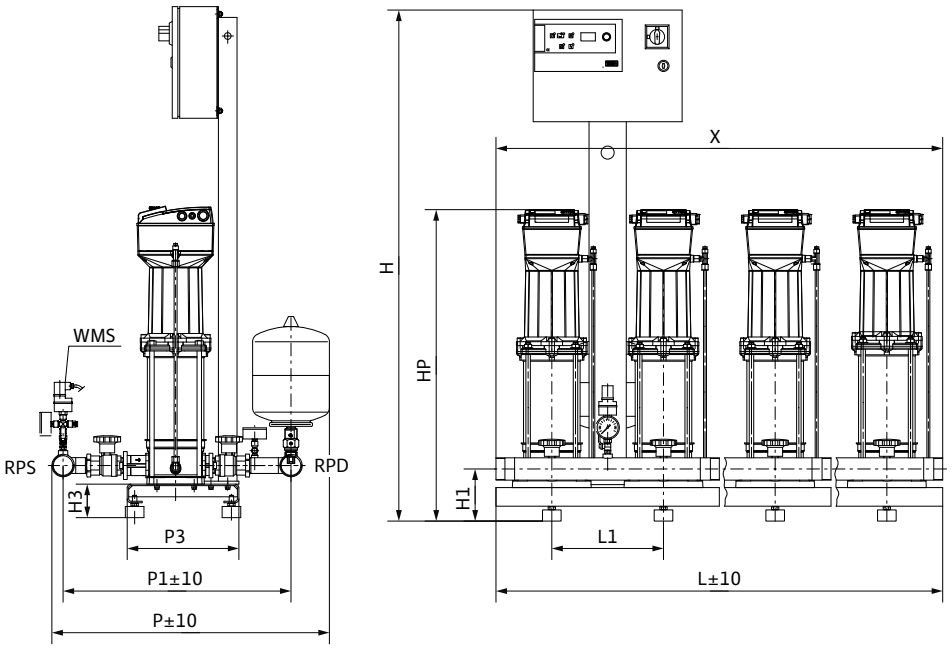

Sample systems are shown.
Accessories (to be ordered separately): Optional WMS low-water cut-out switchgear kit
Installation surface: flat and horizontal
Installation location: dry, well ventilated and frost-proof

Dimensions, weights

Wilo-Comfort-N-Vario COR-2-4...	Nominal diameters of the pipe connections on suction side	Nominal diameters of pipe connections on the pressure side	Dimensions										Weight approx.
	RPS	*RPD*	*H*	*H1*	*H3*	*HP*	*L*	*L1*	*P*	*P1*	*P3*	*X*	*m*
			mm										kg
2MVISE 404/VR	R 2	R 2	1375	140	90	672	600	300	750	613	300	600	92
3MVISE 404/VR	R 2	R 2	1375	140	90	672	900	300	750	613	300	900	132
4MVISE 404/VR	R 2½	R 2½	1375	140	90	672	1200	300	782	645	300	1200	173

Technical data Wilo-Comfort-N-Vario COR MVISE.../VR

Pump curves

Wilo-Comfort-N-Vario COR-2 - COR-4 MVISE 406/VR

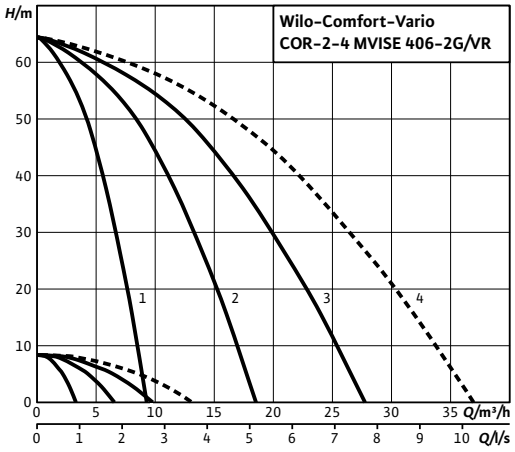

---- including standby pump

Note:
Potable water installations according to DIN 1988, part 5 must include a standby pump.

Selection with standby pump according to duty chart:

1 2-pump system
2 3-pump system
3 4-pump system
4 Select system with next largest pump

If a standby pump is not necessary, the duty chart number corresponds to the number of pumps needed to achieve the calculated maximum system output.

Motor data per pump			
Wilo-Comfort-N-Vario COR-2-4...	**Power consumption**	**Nominal motor power**	**Nominal current 3~400 V, 50 Hz**
	P_1	P_2	I_N
	kW		A
MVISE 406/VR	1.84	1.1	4.2

Technical data Wilo-Comfort-N-Vario COR MVISE.../VR

Dimension drawing

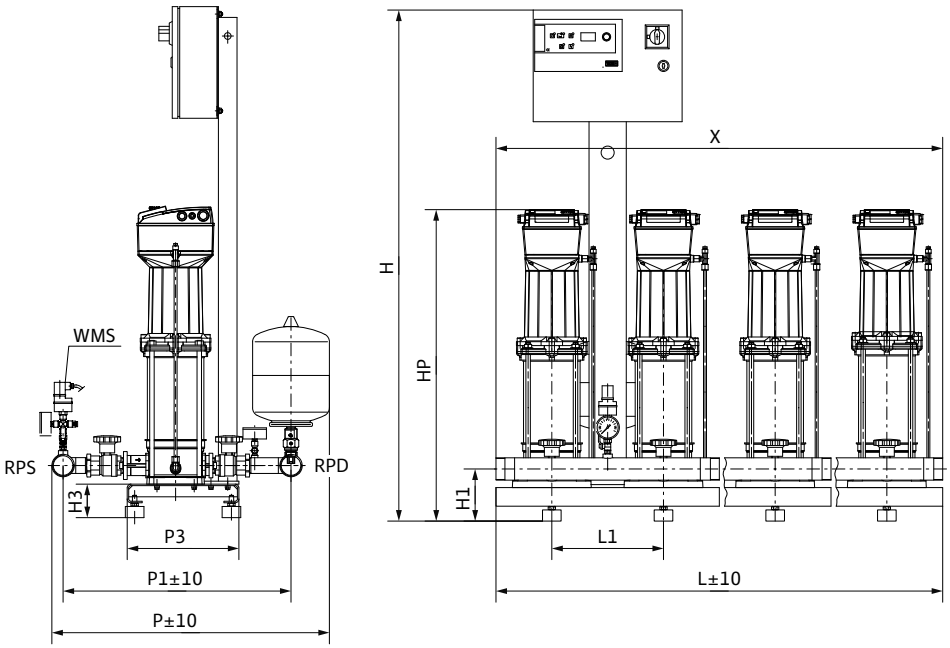

Sample systems are shown.
Accessories (to be ordered separately): Optional WMS low-water cut-out switchgear kit
Installation surface: flat and horizontal
Installation location: dry, well ventilated and frost-proof

Dimensions, weights

Wilo-Comfort-N-Vario COR-2-4...	Nominal diameters of the pipe connections on suction side	Nominal diameters of pipe connections on the pressure side	Dimensions										Weight approx.
	RPS	*RPD*	*H*	*H1*	*H3*	*HP*	*L*	*L1*	*P*	*P1*	*P3*	*X*	*m*
			mm										kg
2MVISE 406/VR	R 2	R 2	1375	140	90	720	600	300	750	613	300	600	94
3MVISE 406/VR	R 2	R 2	1375	140	90	720	900	300	750	613	300	900	135
4MVISE 406/VR	R 2½	R 2½	1375	140	90	720	1200	300	782	645	300	1200	177

Technical data Wilo-Comfort-N-Vario COR MVISE.../VR

Pump curves

Wilo-Comfort-N-Vario COR-2 - COR-4 MVISE 410/VR

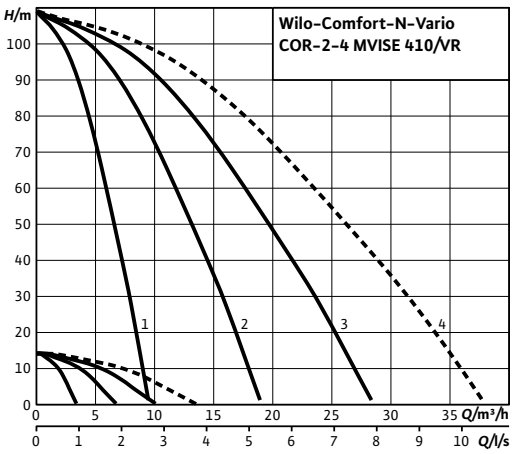

---- including standby pump

Note:
Potable water installations according to DIN 1988, part 5 must include a standby pump.

Selection with standby pump according to duty chart:

1 2-pump system
2 3-pump system
3 4-pump system
4 Select system with next largest pump

If a standby pump is not necessary, the duty chart number corresponds to the number of pumps needed to achieve the calculated maximum system output.

Motor data per pump			
Wilo-Comfort-N-Vario COR-2-4...	**Power consumption**	**Nominal motor power**	**Nominal current 3~400 V, 50 Hz**
	P_1	P_2	I_N
	kW		A
MVISE 410/VR	2.95	2.2	6.5

Technical data Wilo-Comfort-N-Vario COR MVISE.../VR

Dimension drawing

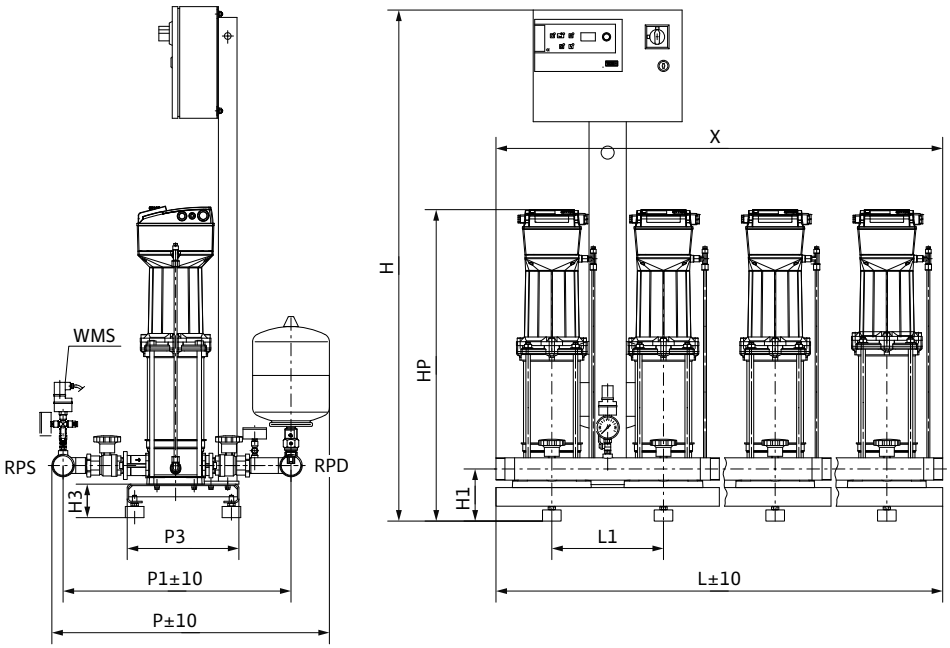

Sample systems are shown.
Accessories (to be ordered separately): Optional WMS low-water cut-out switchgear kit
Installation surface: flat and horizontal
Installation location: dry, well ventilated and frost-proof

Dimensions, weights

Wilo-Comfort-N-Vario COR-2-4...	Nominal diameters of the pipe connections on suction side	Nominal diameters of pipe connections on the pressure side	Dimensions										Weight approx.
	RPS	*RPD*	*H*	*H1*	*H3*	*HP*	*L*	*L1*	*P*	*P1*	*P3*	*X*	*m*
			mm										kg
2MVISE 410/VR	R 2	R 2	1375	140	90	846	600	300	750	613	300	600	107
3MVISE 410/VR	R 2	R 2	1375	140	90	846	900	300	750	613	300	900	154
4MVISE 410/VR	R 2½	R 2½	1375	140	90	846	1200	300	782	645	300	1200	203

Technical data Wilo-Comfort-N-Vario COR MVISE.../VR

Pump curves

Wilo-Comfort-N-Vario COR-2 - COR-4 MVISE 803/VR

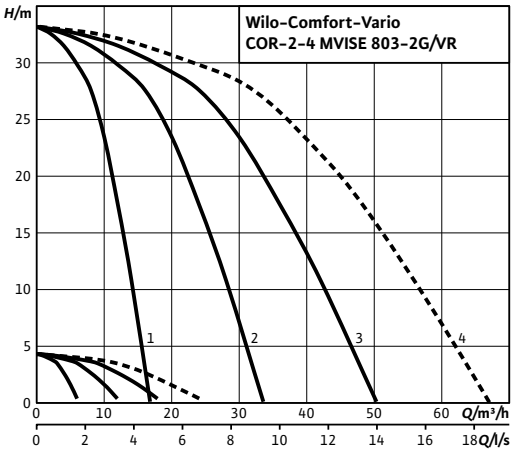

---- including standby pump

Note:
Potable water installations according to DIN 1988, part 5 must include a standby pump.

Selection with standby pump according to duty chart:

1 2-pump system
2 3-pump system
3 4-pump system
4 Select system with next largest pump

If a standby pump is not necessary, the duty chart number corresponds to the number of pumps needed to achieve the calculated maximum system output.

Motor data per pump			
Wilo-Comfort-N-Vario COR-2-4...	**Power consumption**	**Nominal motor power**	**Nominal current 3~400 V, 50 Hz**
	P_1	P_2	I_N
	kW		A
MVISE 803/VR	1.8	1.1	4.2

Technical data Wilo-Comfort-N-Vario COR MVISE.../VR

Dimension drawing

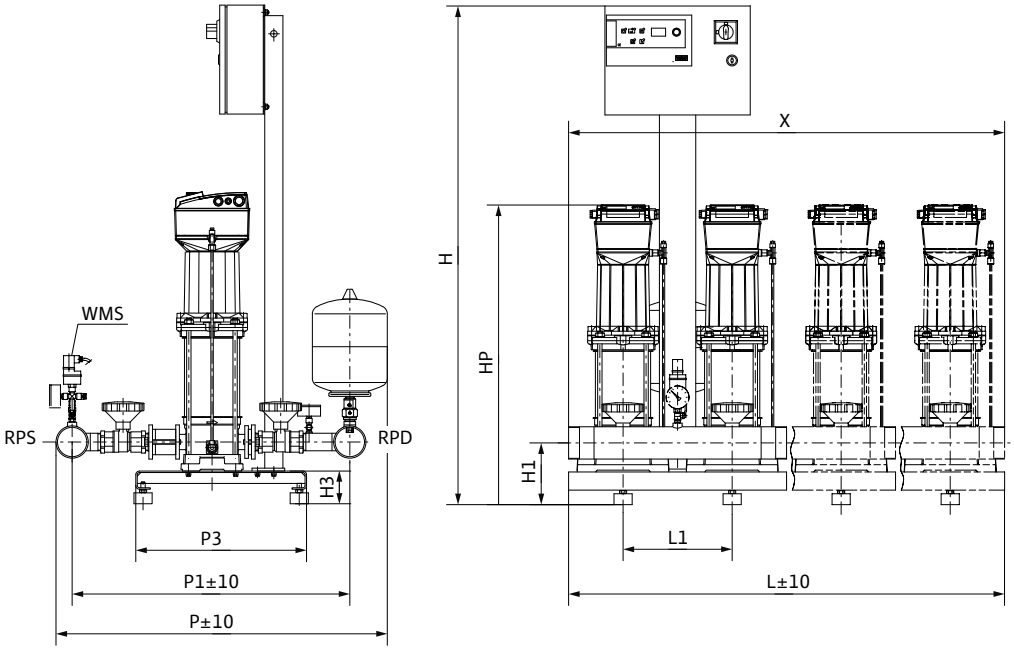

Sample systems are shown.
Accessories (to be ordered separately): Optional WMS low-water cut-out switchgear kit
Installation surface: flat and horizontal
Installation location: dry, well ventilated and frost-proof

Dimensions, weights

Wilo-Comfort-N-Vario COR-2-4...	Nominal diameters of the pipe connections on suction side	Nominal diameters of pipe connections on the pressure side	Dimensions										Weight approx.
	RPS	*RPD*	*H*	*H1*	*H3*	*HP*	*L*	*L1*	*P*	*P1*	*P3*	*X*	*m*
			mm										kg
2MVISE 803/VR	R 3	R 3	1375	170	90	705	600	300	920	764	450	600	137
3MVISE 803/VR	R 3	R 3	1375	170	90	705	900	300	920	764	450	900	185
4MVISE 803/VR	R 3	R 3	1375	170	90	705	1200	300	920	764	450	1200	233

Technical data Wilo-Comfort-N-Vario COR MVISE.../VR

Pump curves

Wilo-Comfort-N-Vario COR-2 - COR-4 MVISE 806/VR

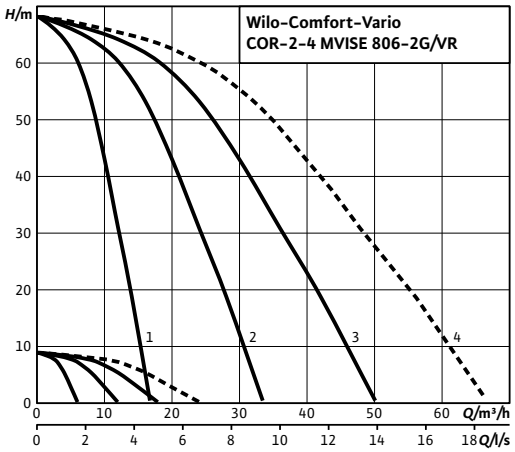

---- including standby pump

Note:
Potable water installations according to DIN 1988, part 5 must include a standby pump.

Selection with standby pump according to duty chart:

1 2-pump system
2 3-pump system
3 4-pump system
4 Select system with next largest pump

If a standby pump is not necessary, the duty chart number corresponds to the number of pumps needed to achieve the calculated maximum system output.

Motor data per pump			
Wilo-Comfort-N-Vario COR-2-4...	**Power consumption**	**Nominal motor power**	**Nominal current 3~400 V, 50 Hz**
	P_1	P_2	I_N
	kW		A
MVISE 806/VR	2.93	2.2	6.5

Technical data Wilo-Comfort-N-Vario COR MVISE.../VR

Dimension drawing

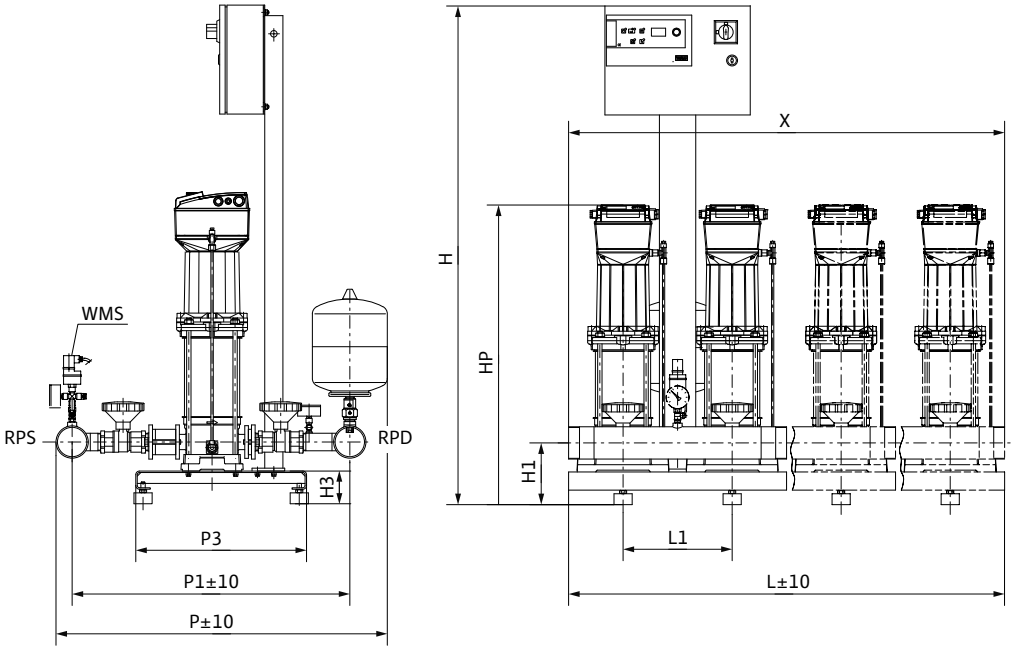

Sample systems are shown.
Accessories (to be ordered separately): Optional WMS low-water cut-out switchgear kit
Installation surface: flat and horizontal
Installation location: dry, well ventilated and frost-proof

Dimensions, weights

Wilo-Comfort-N-Vario COR-2-4...	Nominal diameters of the pipe connections on suction side	Nominal diameters of pipe connections on the pressure side	Dimensions										Weight approx.
	RPS	*RPD*	*H*	*H1*	*H3*	*HP*	*L*	*L1*	*P*	*P1*	*P3*	*X*	*m*
			mm										kg
2MVISE 806/VR	R 3	R 3	1375	170	90	825	600	300	920	764	450	600	150
3MVISE 806/VR	R 3	R 3	1375	170	90	825	900	300	920	764	450	900	204
4MVISE 806/VR	R 3	R 3	1375	170	90	825	1200	300	920	764	450	1200	259

Pressure boosting

Multi-pump systems, speed-controlled

Series description Wilo-Comfort-Vario COR MHIE.../VR

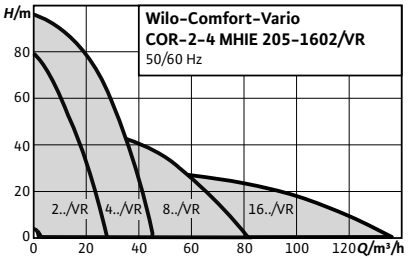

Design

Pressure boosting system with 2 to 4 parallel-switched, non-self-priming stainless steel high-pressure multistage centrifugal pumps with speed-controlled motors

Type key

Example:	**Wilo-COR-3 MHIE 406/VR**
COR	Compact pressure boosting system with integrated speed control
3	Number of pumps
MHIE	Pump series
4	Rated volume flow [m^3/h] of the single pump
06	Number of single-pump stages
VR	Control unit; VR = Vario controller

Application

- Fully automatic water supply and pressure boosting in residential, commercial and public buildings, hotels, hospitals, department stores and for industrial systems.
- Pumping of potable water and process water, cooling water, water for fire-fighting or other water mixtures that do not chemically or mechanically attack the materials used and do not contain abrasive or long-fibre constituents

Special features/product advantages

- Compact system with outstanding price/performance ratio due to MHIE series stainless steel high-pressure multistage centrifugal pumps with integrated air-cooled frequency converters
- Superproportionally large control range
- Integrated full motor protection with PTC thermistor sensor
- Integrated dry-running detection with automatic deactivation in the event of low water via performance characteristics of the motor control electronics

Technical data

- 3~400 V ± 10 %, 50 Hz; 3~380/440 V ±10 %, 60 Hz mains connection, depending on type also 1~230 V, 50/60 Hz (other versions on request)
- Fluid temperature max. 50°C (70°C optional)
- Ambient temperature max. 40 °C
- Operating pressure 16 bar
- Inlet pressure 10 bar
- Nominal connection diameters, discharge side R 2" - DN 250
- Nominal connection diameter, intake side R 2" - DN 250
- Speed range 1200- 3770 rpm
- Protection class IP 54
- Fuse protection on mains side A, AC 3 according to motor power and EVU regulations
- Approved fluids (other fluids on request):
  - Cooling water
  - Potable and process water
  - Fire water (wet line; for dry lines on request - comply with separate specifications of DIN 1988 (EN 806) and of fire-protection authorities.)
- Note on fluids: Approved fluids are generally water mixtures which do not chemically or mechanically attack the materials used and do not contain either abrasive or fibrous matter

Equipment/function

- 2-4 pumps per system
- Infinitely variable control mode through the use of pumps with integrated frequency converters
- Components that come in contact with fluid are corrosion-resistant
- Galvanised base frame with height-adjustable vibration absorber for insulation against structure-borne noise
- Check valve at each pump, on the suction and pressure side
- Non-return valve, on the pressure side
- Diaphragm pressure vessel 8 l, PN16, pressure side
- Pressure sensor, discharge side
- Optional pressure gauge, suction side
- Pressure gauge, discharge side
- Optional low-water cut-out switchgear

Materials

- Impellers 1.4301/1.4404 stainless steel
- Stage chambers 1.4301/1.4404 stainless steel
- Pump housing made of 1.4301/1.4404 stainless steel
- Shaft 1.4404 stainless steel
- Gaskets EPDM (EP851)/FKM (Viton)
- Housing cover made of 1.4301/1.4404 stainless steel
- Housing bottom 1.4404 stainless steel
- Mechanical seal made of tungsten carbide/carbon
- Pressure shroud 1.4301/1.4404 stainless steel
- Bearing, tungsten carbide
- Pump base aluminium

Series description Wilo-Comfort-Vario COR MHIE.../VR

Description/design

- Base frame: galvanised and provided with height-adjustable vibration absorbers for comprehensive insulation against structure-borne noise; other versions on request
- Pipework: complete pipework made of stainless steel, suitable for the connection of all piping materials used in building services; the pipework is dimensioned according to the overall hydraulic performance of the pressure boosting system
- Pumps: 2 to 4 pumps from the MHIE 2.., 4.., 8.. and 16.. series switched in parallel are used; adapted frequency converters on the pump motor enable continuous auto control for all pumps of these series; all pump components in contact with fluid are made of stainless steel
- Valves: each pump is fitted on the suction and pressure side with a check valve with DVGW approval mark or annular shut-off valves and a pressure-side DVGW-approved non-return valve
- Diaphragm pressure vessel: 8 l/PN 16 located on the discharge side with a butyl rubber diaphragm, completely safe in accordance with food safety laws; for testing and inspection purposes, with shut-off ball cock, with drain and throughflow fitting according to DIN 4807
- Pressure sensor: 4 to 20 mA, located on the discharge side for activating the central Comfort-Vario-Controller
- Pressure display: suction- and discharge-side pressure gauge (ø 63 mm); additional digital display of discharge pressure in the alphanumeric LCD display of the Comfort-Vario-Controller
- Controller: the system is standard-equipped with a VR Vario controller

Scope of delivery

- Factory-mounted, connection-ready pressure boosting system checked for functionality and impermeability
- Packaging
- Installation and operating instructions

Electrical connection

3~400 V

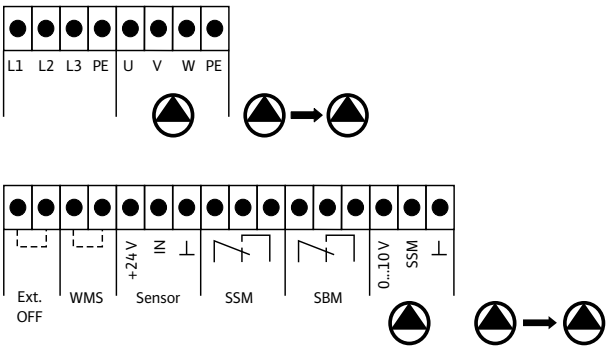

Electrical connection

1~230 V

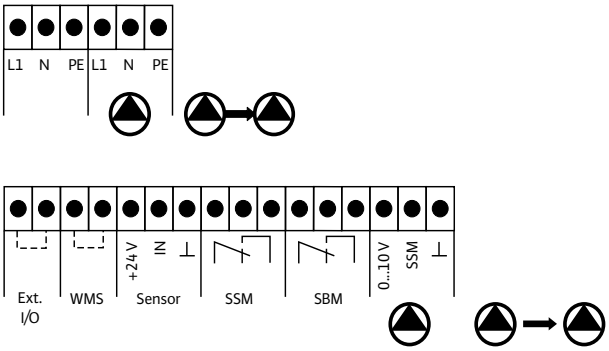

Technical data Wilo-Comfort-Vario COR MHIE.../VR

Pump curves

Wilo-Comfort-Vario COR-2 - COR-4 MHIE 205 EM/VR

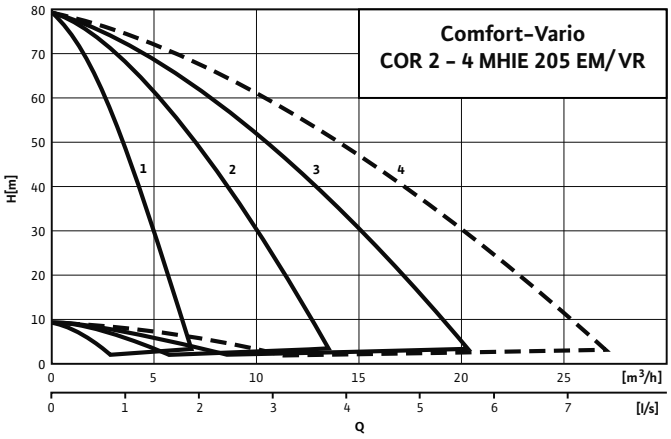

---- including standby pump

Note:
Potable water installations according to DIN 1988, part 5 must include a standby pump.

Selection with standby pump according to duty chart:

1 2-pump system
2 3-pump system
3 4-pump system
4 Select system with next largest pump

If a standby pump is not necessary, the duty chart number corresponds to the number of pumps needed to achieve the calculated maximum system output.

Motor data per pump		
Wilo-Comfort-Vario COR 2-4...	**Nominal motor power**	**Nominal current 1~230 V, 50 Hz**
	P_2	I_N
	kW	A
MHIE 205EM/VR	1.1	14.1

Technical data Wilo-Comfort-Vario COR MHIE.../VR

Dimension drawing

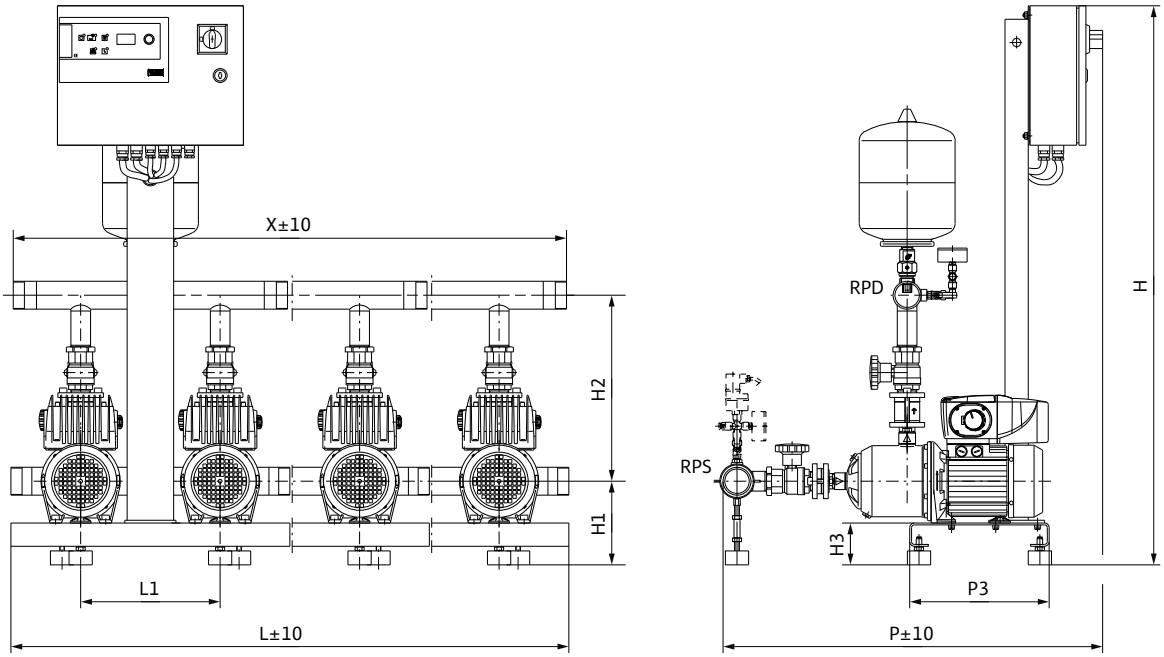

Sample systems are shown.
Accessories (to be ordered separately): Optional WMS low-water cut-out switchgear kit
Installation surface: flat and horizontal
Installation location: dry, well ventilated and frost-proof

Dimensions, weights

Wilo-Comfort-Vario COR 2-4...	Nominal diameters of the pipe connections on suction side	Nominal diameters of pipe connections on the pressure side	Dimensions										Weight approx.
	RPS	*RPD*	*H*	*H1*	*H2*	*H3*	*L*	*L1*	*P*	*P1*	*P3*	*X*	*m*
			mm										kg
COR-2 MHIE 205EM/VR	R 2	R 2	1203	180	400	90	600	300	825	366	300	600	84
COR-3 MHIE 205EM/VR	R 2	R 2	1203	180	400	90	900	300	825	366	300	900	115
COR-4 MHIE 205EM/VR	R 2	R 2	1203	180	400	90	1200	300	825	366	300	1200	147

Technical data Wilo-Comfort-Vario COR MHIE.../VR

Pump curves

Wilo-Comfort-Vario COR-2 - COR-4 MHIE 403 EMVR

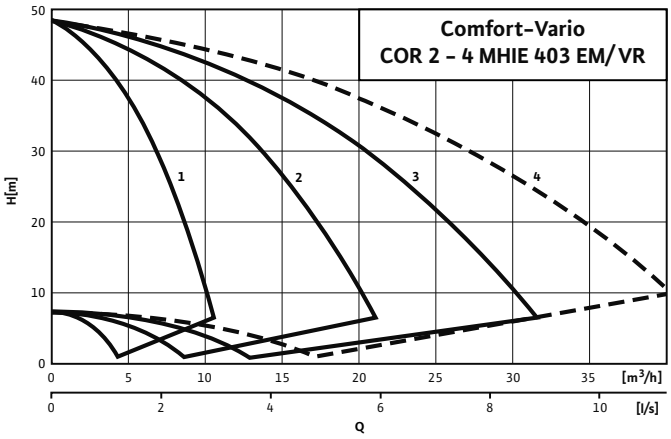

---- including standby pump

Note:
Potable water installations according to DIN 1988, part 5 must include a standby pump.

Selection with standby pump according to duty chart:

1 2-pump system
2 3-pump system
3 4-pump system
4 Select system with next largest pump

If a standby pump is not necessary, the duty chart number corresponds to the number of pumps needed to achieve the calculated maximum system output.

Motor data per pump

Wilo-Comfort-Vario COR 2-4...	Nominal motor power	Nominal current 1~230 V, 50 Hz
	P_2	I_N
	kW	A
MHIE 403EM/VR	1.1	12.7

Technical data Wilo-Comfort-Vario COR MHIE.../VR

Dimension drawing

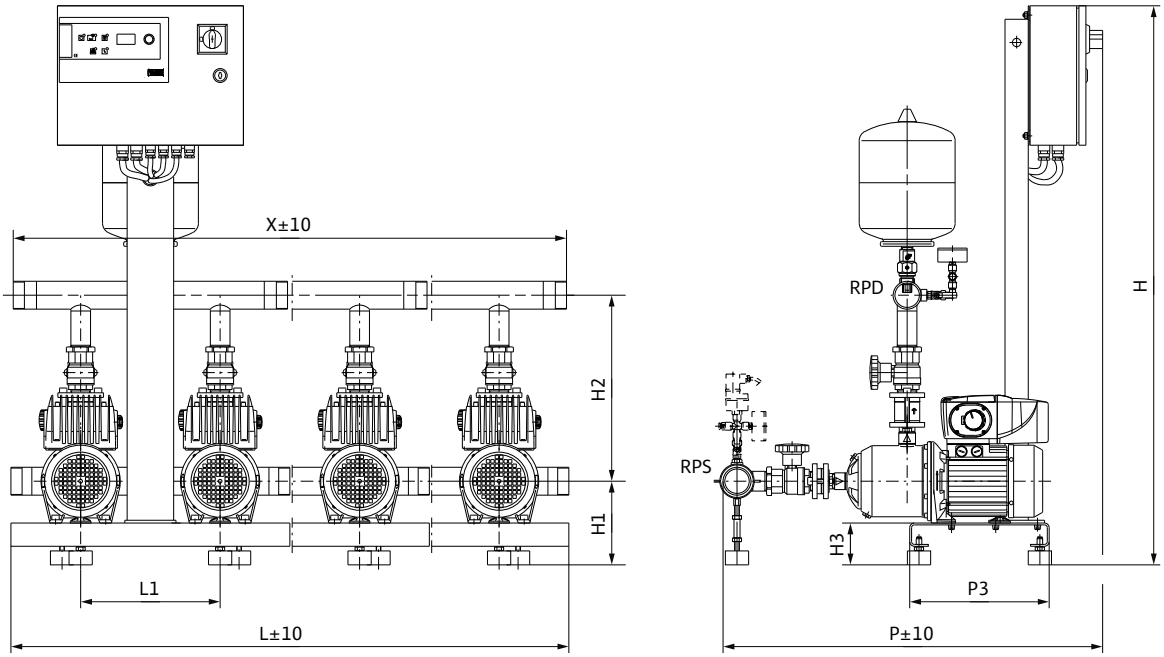

Sample systems are shown.
Accessories (to be ordered separately): Optional WMS low-water cut-out switchgear kit
Installation surface: flat and horizontal
Installation location: dry, well ventilated and frost-proof

Dimensions, weights

Wilo-Comfort-Vario COR 2-4...	Nominal diameters of the pipe connections on suction side	Nominal diameters of pipe connections on the pressure side	Dimensions										Weight approx.
	RPS	*RPD*	*H*	*H1*	*H2*	*H3*	*L*	*L1*	*P*	*P1*	*P3*	*X*	*m*
			mm										kg
COR-2 MHIE 403EM/VR	R 2	R 2	1203	180	400	90	600	300	780	318	300	600	80
COR-3 MHIE 403EM/VR	R 2	R 2	1203	180	400	90	900	300	780	318	300	900	111
COR-4 MHIE 403EM/VR	R 2½	R 2½	1203	180	410	90	1200	300	795	328	300	1200	146

Technical data Wilo-Comfort-Vario COR MHIE.../VR

Pump curves

Wilo-Comfort-Vario COR-2 - COR-4 MHIE 205/VR

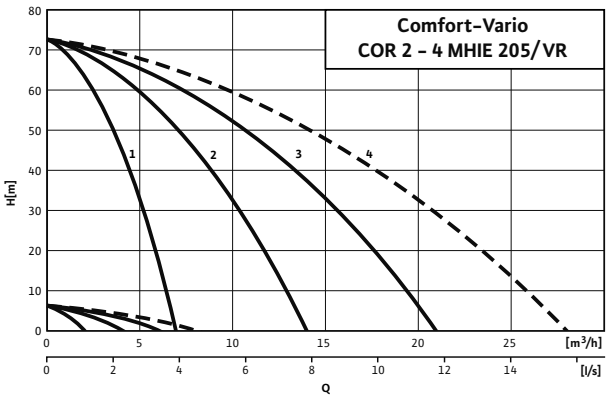

---- including standby pump

Note:
Potable water installations according to DIN 1988, part 5 must include a standby pump.

Selection with standby pump according to duty chart:

1 2-pump system
2 3-pump system
3 4-pump system
4 Select system with next largest pump

If a standby pump is not necessary, the duty chart number corresponds to the number of pumps needed to achieve the calculated maximum system output.

Motor data per pump

Wilo-Comfort-Vario COR 2-4...	Nominal motor power	Nominal current 3~400 V, 50 Hz	Motor efficiency		
	P_2	I_N	$\eta_{m\ 50\%}$	$\eta_{m\ 75\%}$	$\eta_{m\ 100\%}$
	kW	A	%		
MHIE 205/VR	1.1	3.3	79.0	82.0	82.5

Motor efficiency based on 400 V, 50 Hz

Technical data Wilo-Comfort-Vario COR MHIE.../VR

Dimension drawing

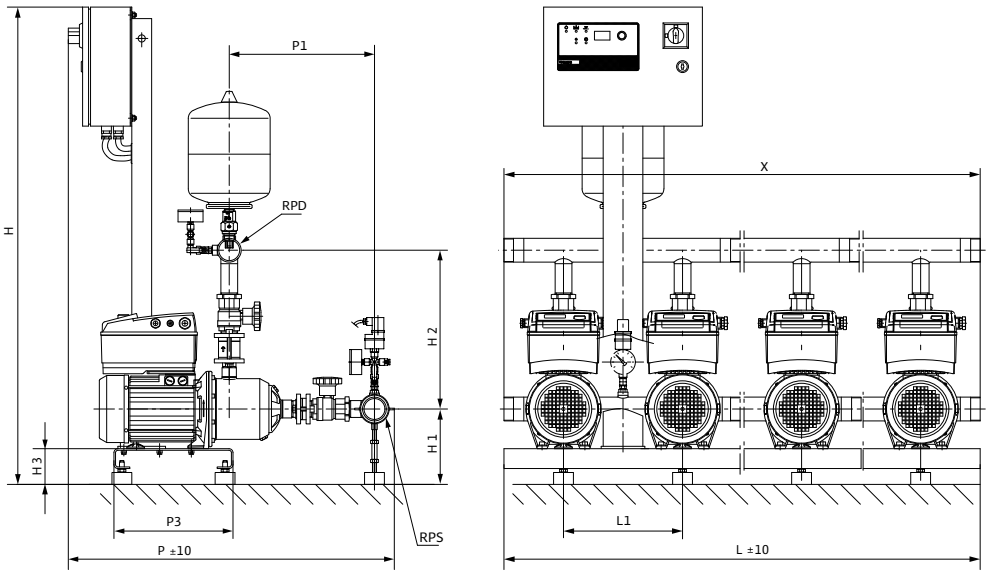

Sample systems are shown.
Accessories (to be ordered separately): Optional WMS low-water cut-out switchgear kit
Installation surface: flat and horizontal
Installation location: dry, well ventilated and frost-proof

Dimensions, weights

Wilo-Comfort-Vario COR 2-4...	Nominal diameters of the pipe connections on suction side	Nominal diameters of pipe connections on the pressure side	Dimensions										Weight approx.
	RPS	*RPD*	*H*	*H1*	*H2*	*H3*	*L*	*L1*	*P*	*P1*	*P3*	*X*	*m*
			mm										kg
COR-2 MHIE 205/VR	R 2	R 2	1203	180	400	90	600	300	825	366	300	600	82
COR-3 MHIE 205/VR	R 2	R 2	1203	180	400	90	900	300	825	366	300	900	112
COR-4 MHIE 205/VR	R 2	R 2	1203	180	400	90	1200	300	825	366	300	1200	143

Technical data Wilo-Comfort-Vario COR MHIE.../VR

Pump curves

Wilo-Comfort-Vario COR-2 - COR-4 MHIE 403/VR

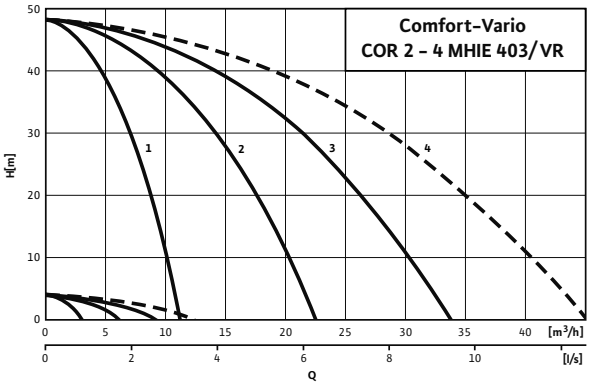

---- including standby pump

Note:
Potable water installations according to DIN 1988, part 5 must include a standby pump.

Selection with standby pump according to duty chart:

1 2-pump system
2 3-pump system
3 4-pump system
4 Select system with next largest pump

If a standby pump is not necessary, the duty chart number corresponds to the number of pumps needed to achieve the calculated maximum system output.

Motor data per pump

Wilo-Comfort-Vario COR 2-4...	Nominal motor power	Nominal current 3~400 V, 50 Hz	Motor efficiency		
	P_2	I_N	$\eta_{m\ 50\%}$	$\eta_{m\ 75\%}$	$\eta_{m\ 100\%}$
	kW	A	%		
MHIE 403/VR	1.1	3.3	79.0	82.0	82.5

Motor efficiency based on 400 V, 50 Hz

Technical data Wilo-Comfort-Vario COR MHIE.../VR

Dimension drawing

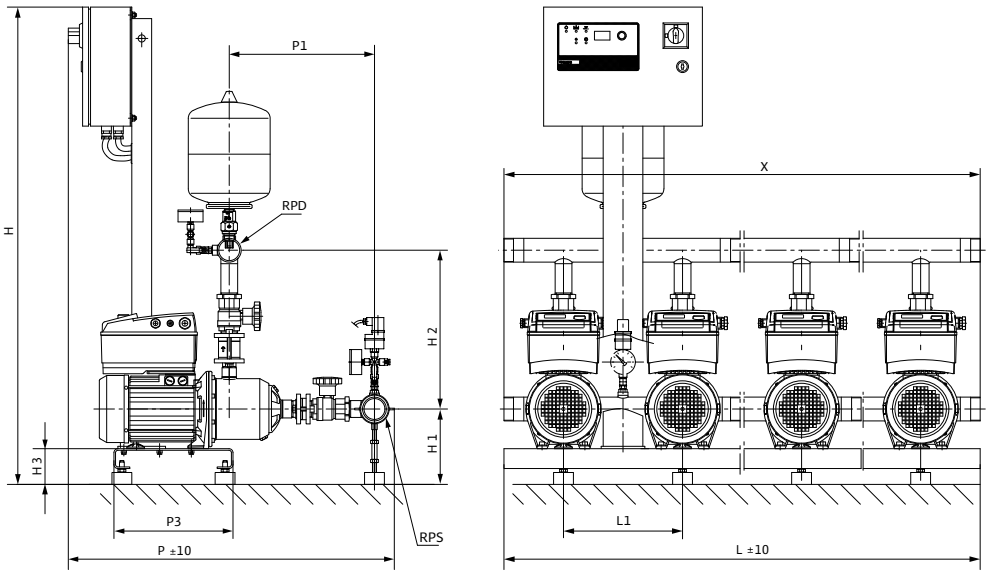

Sample systems are shown.
Accessories (to be ordered separately): Optional WMS low-water cut-out switchgear kit
Installation surface: flat and horizontal
Installation location: dry, well ventilated and frost-proof

Dimensions, weights

Wilo-Comfort-Vario COR 2-4...	Nominal diameters of the pipe connections on suction side	Nominal diameters of pipe connections on the pressure side	Dimensions										Weight approx.
	RPS	*RPD*	*H*	*H1*	*H2*	*H3*	*L*	*L1*	*P*	*P1*	*P3*	*X*	*m*
			mm										kg
COR-2 MHIE 403/VR	R 2	R 2	1203	180	400	90	600	300	780	318	300	600	78
COR-3 MHIE 403/VR	R 2	R 2	1203	180	400	90	900	300	780	318	300	900	108
COR-4 MHIE 403/VR	R 2½	R 2½	1203	180	410	90	1200	300	795	328	300	1200	139

Technical data Wilo-Comfort-Vario COR MHIE.../VR

Pump curves

Wilo-Comfort-Vario COR-2 - COR-4 MHIE 406/VR

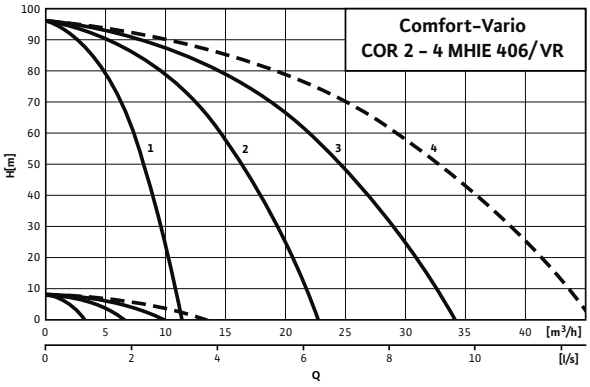

---- including standby pump

Note:
Potable water installations according to DIN 1988, part 5 must include a standby pump.

Selection with standby pump according to duty chart:

1 2-pump system
2 3-pump system
3 4-pump system
4 Select system with next largest pump

If a standby pump is not necessary, the duty chart number corre-sponds to the number of pumps needed to achieve the calculated maximum system output.

Motor data per pump

Wilo-Comfort-Vario COR 2-4...	Nominal motor power	Nominal current 3~400 V, 50 Hz	Motor efficiency		
	P_2	I_N	$\eta_{m\ 50\%}$	$\eta_{m\ 75\%}$	$\eta_{m\ 100\%}$
	kW	A	%		
MHIE 406/VR	2.2	5.6	81.0	84.0	85.5

Motor efficiency based on 400 V, 50 Hz

Technical data Wilo-Comfort-Vario COR MHIE.../VR

Dimension drawing

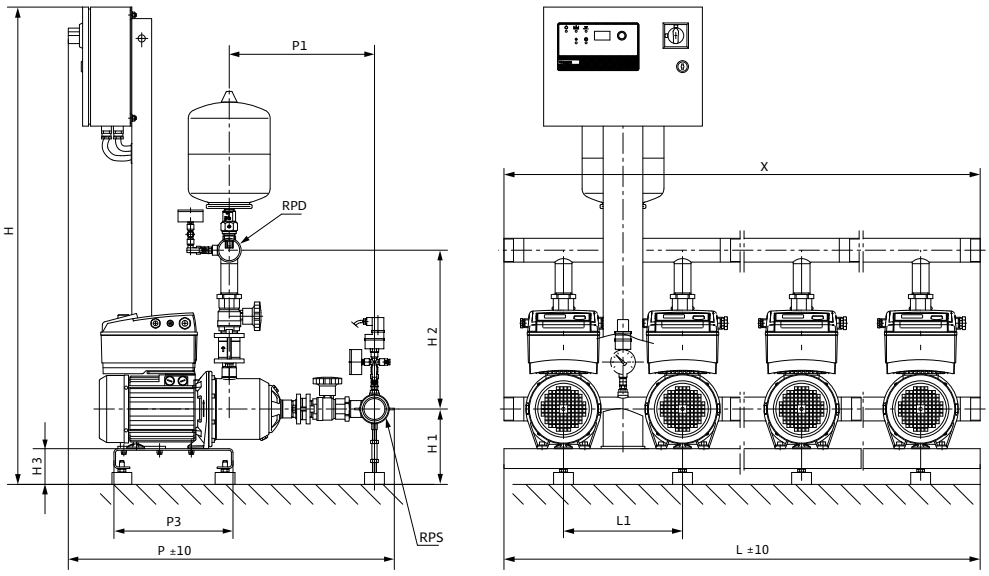

Sample systems are shown.
Accessories (to be ordered separately): Optional WMS low-water cut-out switchgear kit
Installation surface: flat and horizontal
Installation location: dry, well ventilated and frost-proof

Dimensions, weights

Wilo-Comfort-Vario COR 2-4...	Nominal diameters of the pipe connections on suction side	Nominal diameters of pipe connections on the pressure side	Dimensions										Weight approx.
	RPS	*RPD*	*H*	*H1*	*H2*	*H3*	*L*	*L1*	*P*	*P1*	*P3*	*X*	*m*
			mm										kg
COR-2 MHIE 406/VR	R 2	R 2	1203	180	400	90	600	300	850	390	300	600	96
COR-3 MHIE 406/VR	R 2	R 2	1203	180	400	90	900	300	850	390	300	900	133
COR-4 MHIE 406/VR	R 2½	R 2½	1203	180	410	90	1200	300	865	400	300	1200	182

Technical data Wilo-Comfort-Vario COR MHIE.../VR

Pump curves

Wilo-Comfort-Vario COR-2 - COR-4 MHIE 803/VR

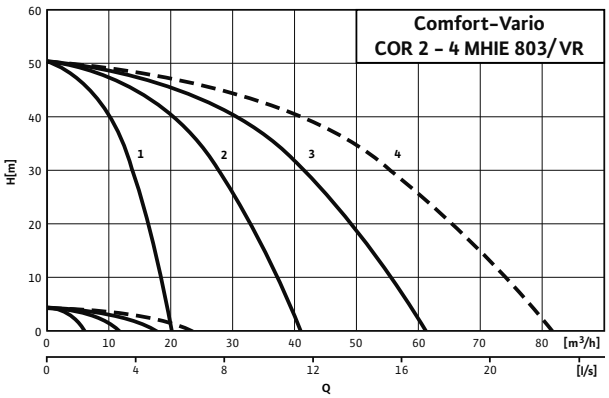

---- including standby pump

Note:
Potable water installations according to DIN 1988, part 5 must include a standby pump.

Selection with standby pump according to duty chart:

1 2-pump system
2 3-pump system
3 4-pump system
4 Select system with next largest pump

If a standby pump is not necessary, the duty chart number corresponds to the number of pumps needed to achieve the calculated maximum system output.

Motor data per pump

Wilo-Comfort-Vario COR 2-4...	Nominal motor power	Nominal current 3~400 V, 50 Hz	Motor efficiency		
	P_2	I_N	$\eta_{m\ 50\%}$	$\eta_{m\ 75\%}$	$\eta_{m\ 100\%}$
	kW	A	%		
MHIE 803/VR	2.2	5.6	81.0	84.0	85.5

Motor efficiency based on 400 V, 50 Hz

Technical data Wilo-Comfort-Vario COR MHIE.../VR

Dimension drawing

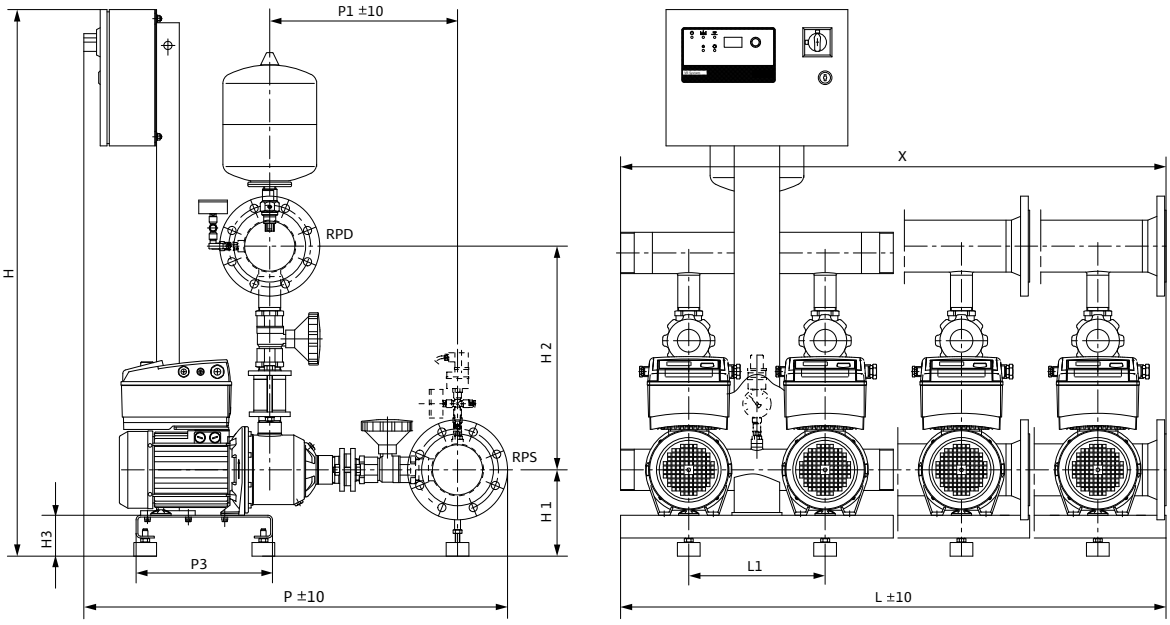

Sample systems are shown.
Accessories (to be ordered separately): Optional WMS low-water cut-out switchgear kit
Installation surface: flat and horizontal
Installation location: dry, well ventilated and frost-proof

Dimensions, weights

Wilo-Comfort-Vario COR 2-4...	Nominal diameters of the pipe connections on suction side	Nominal diameters of pipe connections on the pressure side	Dimensions										Weight approx.
	RPS	*RPD*	*H*	*H1*	*H2*	*H3*	*L*	*L1*	*P*	*P1*	*P3*	*X*	*m*
			mm										kg
COR-2 MHIE 803/VR	R 3	R 3	1203	180	382	90	600	300	847	382	300	600	102
COR-3 MHIE 803/VR	R 3	R 3	1203	180	382	90	900	300	847	382	300	900	142
COR-4 MHIE 803/VR	R 3	R 3	1203	180	382	90	1200	300	847	382	300	1200	182

Technical data Wilo-Comfort-Vario COR MHIE.../VR

Pump curves

Wilo-Comfort-Vario COR-2 - COR-4 MHIE 1602/VR

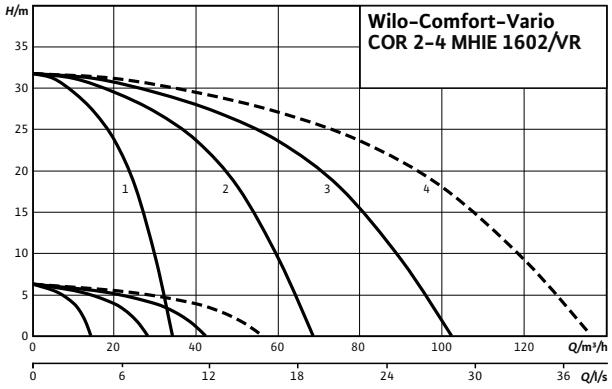

---- including standby pump

Note:
Potable water installations according to DIN 1988, part 5 must include a standby pump.

Selection with standby pump according to duty chart:

1 2-pump system
2 3-pump system
3 4-pump system
4 Select system with next largest pump

If a standby pump is not necessary, the duty chart number corresponds to the number of pumps needed to achieve the calculated maximum system output.

Motor data per pump

Wilo-Comfort-Vario COR 2-4...	Nominal motor power	Nominal current 3~400 V, 50 Hz	Motor efficiency		
	P_2	I_N	$\eta_{m\ 50\%}$	$\eta_{m\ 75\%}$	$\eta_{m\ 100\%}$
	kW	A	%		
MHIE 1602/VR	2.2	5.6	81.0	84.0	85.5

Motor efficiency based on 400 V, 50 Hz

Technical data Wilo-Comfort-Vario COR MHIE.../VR

Dimension drawing

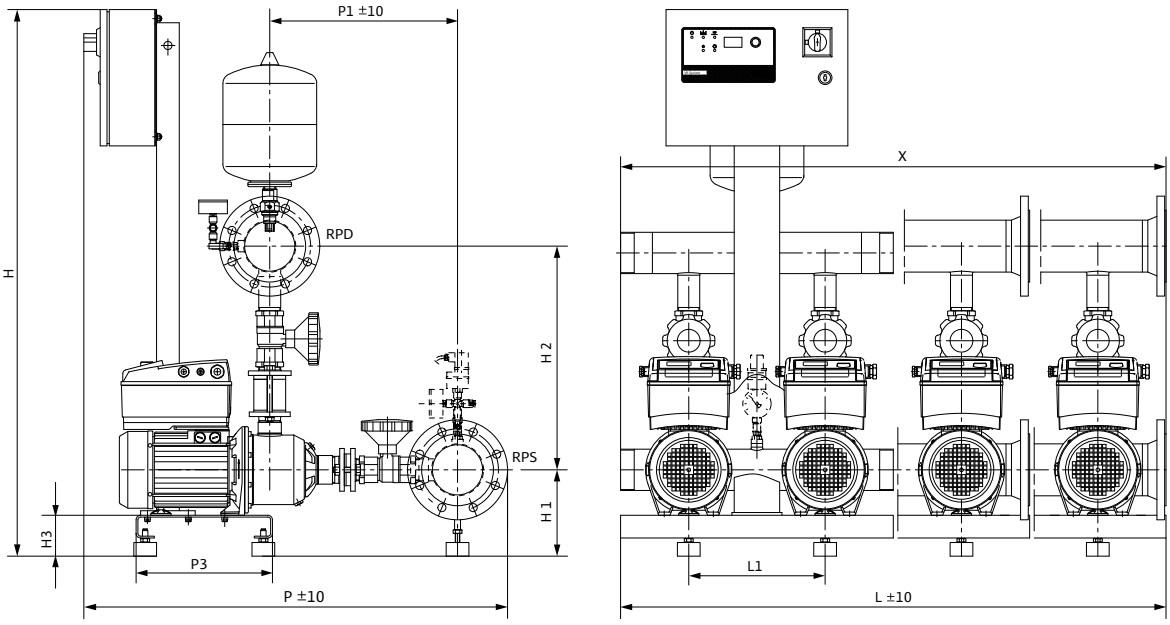

Sample systems are shown.
Accessories (to be ordered separately): Optional WMS low-water cut-out switchgear kit
Installation surface: flat and horizontal
Installation location: dry, well ventilated and frost-proof

Dimensions, weights

Wilo-Comfort-Vario COR 2-4...	Nominal diameters of the pipe connections on suction side	Nominal diameters of pipe connections on the pressure side	Dimensions										Weight approx.
	RPS	*RPD*	*H*	*H1*	*H2*	*H3*	*L*	*L1*	*P*	*P1*	*P3*	*X*	*m*
			mm										kg
COR-2 MHIE 1602/VR	R 3	R 3	1203	180	392	90	600	300	862	402	300	600	113
COR-3 MHIE 1602/VR	DN 100	DN 100	1203	180	392	90	900	300	942	417	300	900	163
COR-4 MHIE 1602/VR	DN 100	DN 100	1203	180	392	90	1200	300	942	417	300	1200	204

Pressure boosting

Multi-pump systems with fixed speed or speed-controlled base-load pump

Series description Wilo-SiBoost Smart (FC) Helix V

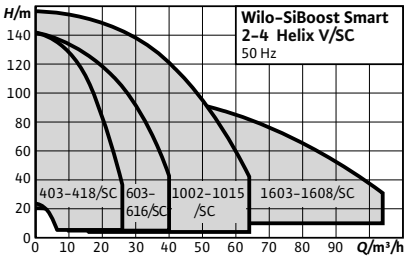

Design

Highly efficient water-supply unit ready for connection (non self-priming). With 2 to 4 vertically arranged glanded stainless steel high-pressure multistage centrifugal pumps from the Helix V series connected in parallel, including Smart Controller SC (available with and without frequency converter FC).

Type key

Example:	**Wilo-SiBoost-Smart FC 4Helix V 1006**
SiBoost	System for pressure boosting in the commercial area
Smart	Smart Controller SC control device
FC	Control of the respective base-load pump by frequency converters
4	Number of pumps
Helix V	Pump series
10	Nominal flow rate [m^3/h] of single pump
06	Number of single-pump stages

Application

- Fully automatic water supply and pressure boosting in residential, commercial and public buildings, hotels, hospitals, department stores and for industrial systems.
- Pumping of potable water, process water, cooling water, fire water (apart from fire-extinguishing systems in accordance with DIN 14462) or other water mixtures that do not attack the materials used chemically or mechanically and do not contain abrasive or long-fibre constituents

Special features/product advantages

- Heavy-duty system with Helix V series stainless steel high-pressure multistage centrifugal pumps for all requirements contained in DIN 1988 (EN 806)
- High-efficiency pump hydraulics in conjunction with IE2 standard motors
- Hydraulics of entire system are pressure-loss optimised.
- 2- 6 vertical Helix V series high-pressure multistage centrifugal pumps switched in parallel
- "Smart" Controller: symbol-based LC display, simple navigation with a clear menu, rotary knob for easy setting of parameters. Communication-capable control device for monitoring the system operation, available with and without frequency converter for infinitely variable control of the base-load pump

Technical data

- Mains connection 3~230 V/400 V ± 10%, 50 Hz
- Max. fluid temperature 50 °C (70 °C optional)
- Max. ambient temperature 40 °C
- Operating pressure 16 bar (25 bar optional)
- Inlet pressure 10 bar
- Nominal connection diameters on discharge side R 1½ - DN 100
- Nominal connection diameter on inlet side R 1½" - DN 100
- Nominal speed 2850 rpm
- Protection class IP 54 (SC control device)
- Fuse protection on mains side A, AC 3 according to motor power and EVU regulations
- Approved fluids (other fluids on request):
  - Potable water and secondary hot water
  - Cooling water
  - Fire water
- Note on fluids: Approved fluids are generally waters which do not attack the materials used, neither chemically nor mechanically, and do not contain any abrasive or long-fibre constituents.

Equipment/function

- 2-4 pumps per system of the Helix V 4 to Helix V 16 series standard motor
- Automatic pump control via Smart Controller SC. The Smart FC version is additionally equipped with a frequency converter in the switchbox
- Parts that come in contact with the fluid are corrosion-resistant
- Base frame made of galvanised steel, with height-adjustable vibration absorbers for insulation against structure-borne noise, cable guidance and integrated hoisting gear
- Shut-off valve on the suction and pressure side of each pump
- Non-return valve on the pressure side of each pump
- Diaphragm pressure vessel 8 l, PN16, pressure side (accessories)
- Pressure sensor, pressure side
- Pressure gauge, pressure side
- Optional low-water cut-out switchgear with pressure gauge, suction side

Materials

- Impellers, diffusors, stage housing made of 1.4307 stainless steel
- Pump housing made of stainless steel 1.4301.
- Shaft made of 1.4057 stainless steel
- 1.4404 shaft protection sleeve
- O-ring gaskets made of EPDM (FKM gasket on request)
- Piping made of 1.4301 stainless steel

Series description Wilo-SiBoost Smart (FC) Helix V

Description/design

- Base frame: galvanised steel, with height-adjustable vibration absorbers for comprehensive insulation against structure-borne noise; other versions on request
- Pipework: complete pipework made of stainless steel, suitable for the connection of all conventional piping materials; the pipework is dimensioned according to the overall hydraulic performance of the pressure boosting system
- Pumps: 2 to 4 pumps switched in parallel of the Helix V 4 to Helix V 16 series; all pump parts which come into contact with the fluid are made of stainless steel; other versions on request. KTW/WRAS/ACS approval for parts that come in contact with the fluid
- Valves: Each pump is fitted on the suction and pressure side with a standard check valve with DVGW approval mark and on the pressure side with a DVGW/KTW-approved non-return valve.
- Diaphragm pressure vessel (accessories): 8 l/PN16 arranged on the discharge side with a diaphragm made of butyl rubber, with DVGW/KTW approval, completely safe in accordance with food safety laws; for testing and inspection purposes, with a shut-off ball cock with drain and throughflow fitting with DVGW/KTW approval in accordance with DIN 4807
- Pressure sensor: 4 to 20 mA, located on the discharge side for controlling the central Smart Controller SC
- Pressure display: pressure gauge (ø 63 mm) arranged on the discharge side; additional digital indication of the discharge pressure in the alphanumeric LC display of the Smart Controller SC
- Switchgear/controller: The system is equipped with a "Smart Controller" SC as standard; FC versions also equipped with a frequency converter

Scope of delivery

- Factory-mounted, connection-ready pressure boosting system checked for functionality and impermeability
- Packaging
- Installation and operating instructions

Series description Wilo-SiBoost Smart (FC) Helix V

Terminal diagram

Smart Controller SC, direct starting

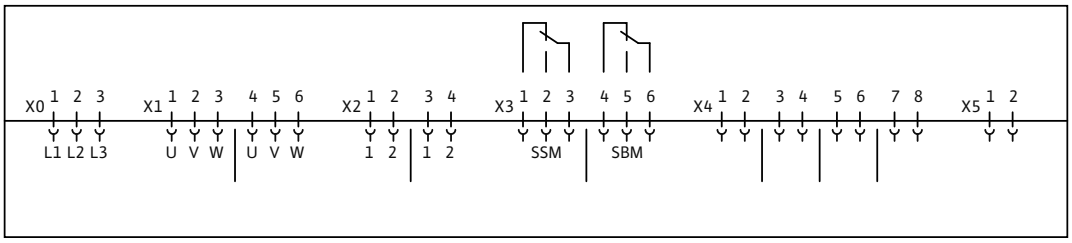

x0: Mains connection
x1: Power supply, pumps
- 1-3, pump 1
- 4-6, pump 2
x2: Thermal winding contact connection
- 1-2. pump 1
- 3-4, pump 2
- etc.
x3: Potential-free contacts (signals)
- 1-3, SSM (collective fault signal)
- 4-6, SBM (collective run signal)

x4: Sensor connections
- 1, sensor (In) 2. sensor (+);
- 3-4, external On/Off
- 5-6, dry-running protection
- 7-8, setpoint 2
x5: Analogue outputs
- 1-2. actual pressure (0...10 V)

Series description Wilo-SiBoost Smart (FC) Helix V

Terminal diagram

Smart Controller SC, Y-Δ starting

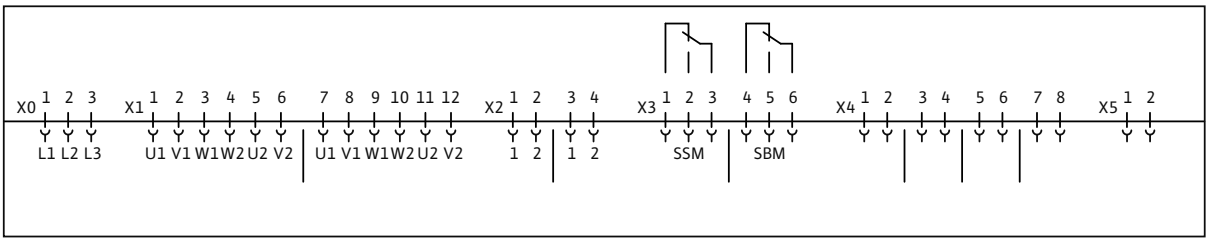

x0: Mains connection
x1: Power supply, pumps
- 1-6, pump 1
- 7-12. pump 2
x2: Thermal winding contact connection
- 1-2. pump 1
- 3-4, pump 2
- etc.
x3: Potential-free contacts (signals)
- 1-3, SSM (collective fault signal)
- 4-6, SBM (collective run signal)

x4: Sensor connections
- 1, sensor (In) 2. sensor (+);
- 3-4, external On/Off
- 5-6, dry-running protection
- 7-8, setpoint 2
x5: Analogue outputs
- 1-2. actual pressure (0...10 V)

Technical data Wilo-SiBoost Smart (FC) Helix V

Pump curves

Wilo-SiBoost Smart 2 Helix V 403-418

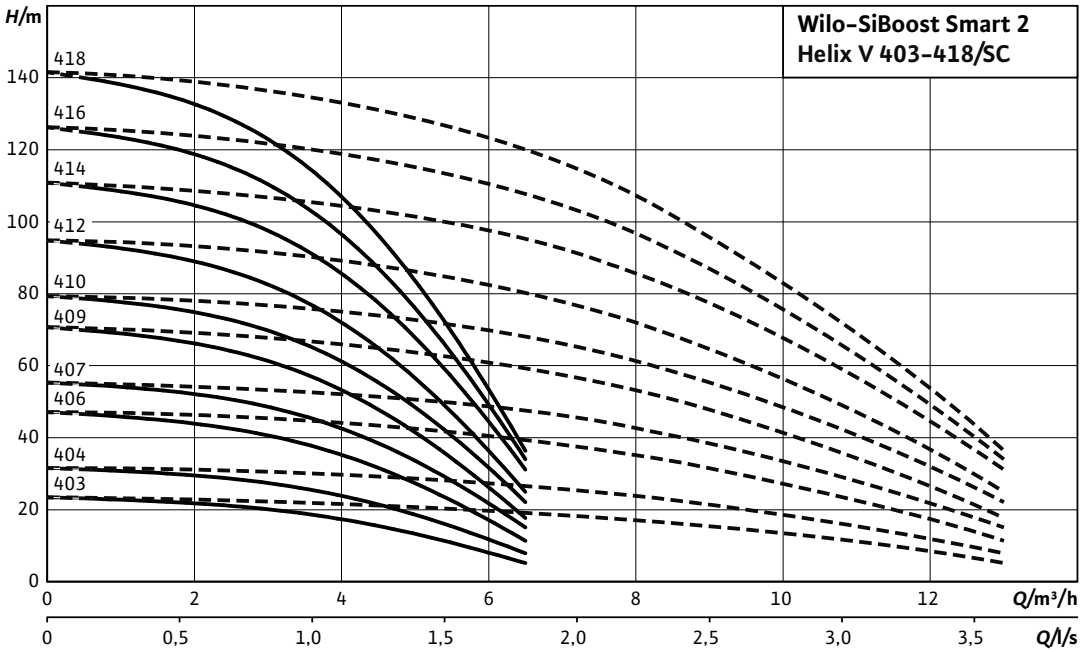

---- including standby pump

Motor data per pump

Wilo-SiBoost Smart 2...	Nominal motor power	Nominal current 3~400 V, 50 Hz	Motor efficiency		
	P_2	I_N	$\eta_{m\ 50\%}$	$\eta_{m\ 75\%}$	$\eta_{m\ 100\%}$
	kW	A	%		
Helix V 403	0.37	0.97	71.0	72.8	72.8
Helix V 404	0.55	1.31	73.0	75.0	75.5
Helix V 406	0.75	1.77	76.0	77.4	77.4
Helix V 407	1.1	2.6	78.0	79.6	79.6
Helix V 409	1.1	2.6	78.0	79.6	79.6
Helix V 410	1.5	3.3	80.0	81.3	81.3
Helix V 412	1.5	3.3	80.0	81.3	81.3
Helix V 414	2.2	4.6	82.0	83.2	83.2
Helix V 416	2.2	4.6	82.0	83.2	83.2
Helix V 418	2.2	4.6	82.0	83.2	83.2

Motor efficiency based on 400 V, 50 Hz

Technical data Wilo-SiBoost Smart (FC) Helix V

Dimension drawing

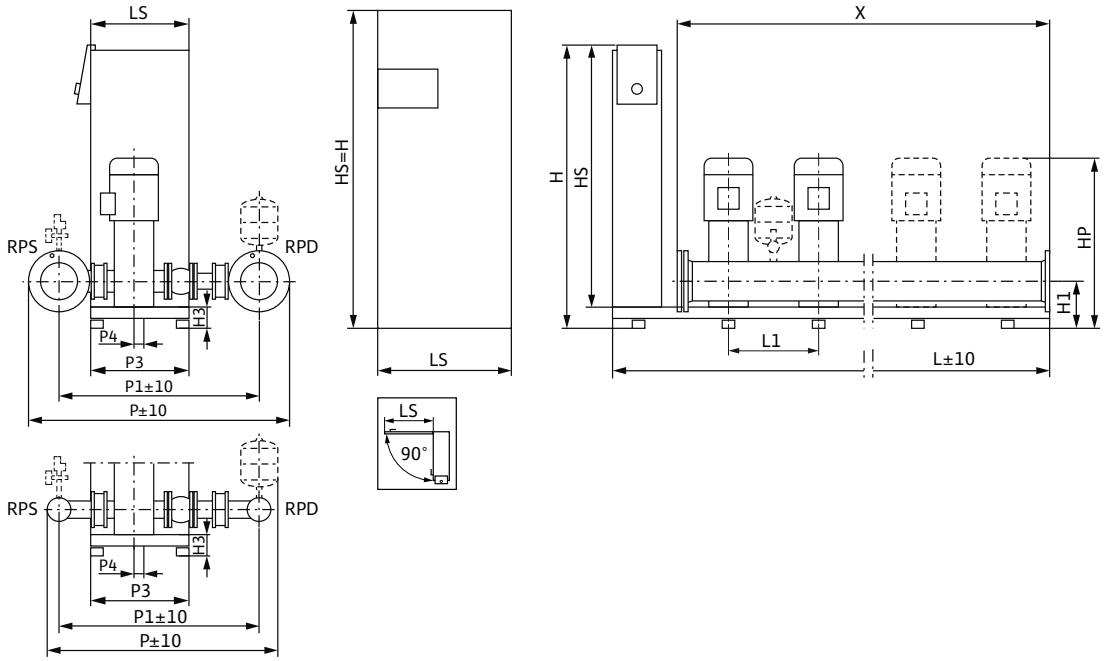

Sample systems are shown.
Accessories (to be ordered separately): Optional WMS low-water cut-out switchgear kit; diaphragm pressure vessel (8 l, PN16)
Installation surface: flat and horizontal
Installation location: dry, well ventilated and frost-proof
To facilitate maintenance, a service area of 1m around the installation is recommended.

Dimensions, weights

Wilo-SiBoost Smart 2...	Nominal diameters of the pipe connections on suction side	Nominal diameters of pipe connections on the pressure side	Dimensions													Weight approx.
	RPS	*RPD*	*H*	*H1*	*H3*	*HP*	*HS*	*L*	*L1*	*LS*	*P*	*P1*	*P3*	*P4*	*X*	*m*
			mm													kg
Helix V 403	R 1½	R ½	1055	140	90	710	950	850	300	400	694	561	420	30	600	126
Helix V 404	R 1½	R ½	1055	140	90	735	950	850	300	400	694	561	420	30	600	128
Helix V 406	R 1½	R ½	1055	140	90	805	950	850	300	400	694	561	420	30	600	134
Helix V 407	R 1½	R ½	1055	140	90	830	950	850	300	400	694	561	420	30	600	139
Helix V 409	R 1½	R ½	1055	140	90	880	950	850	300	400	694	561	420	30	600	141
Helix V 410	R 1½	R ½	1055	140	90	937	950	850	300	400	694	561	420	30	600	151
Helix V 412	R 1½	R ½	1055	140	90	987	950	850	300	400	694	561	420	30	600	153
Helix V 414	R 1½	R ½	1055	140	90	1037	950	850	300	400	694	561	420	30	600	161
Helix V 416	R 1½	R ½	1055	140	90	1087	950	850	300	400	694	561	420	30	600	163
Helix V 418	R 1½	R ½	1055	140	90	1137	950	850	300	400	694	561	420	30	600	165

Technical data Wilo-SiBoost Smart (FC) Helix V

Pump curves

Wilo-SiBoost Smart 3 Helix V 403-418

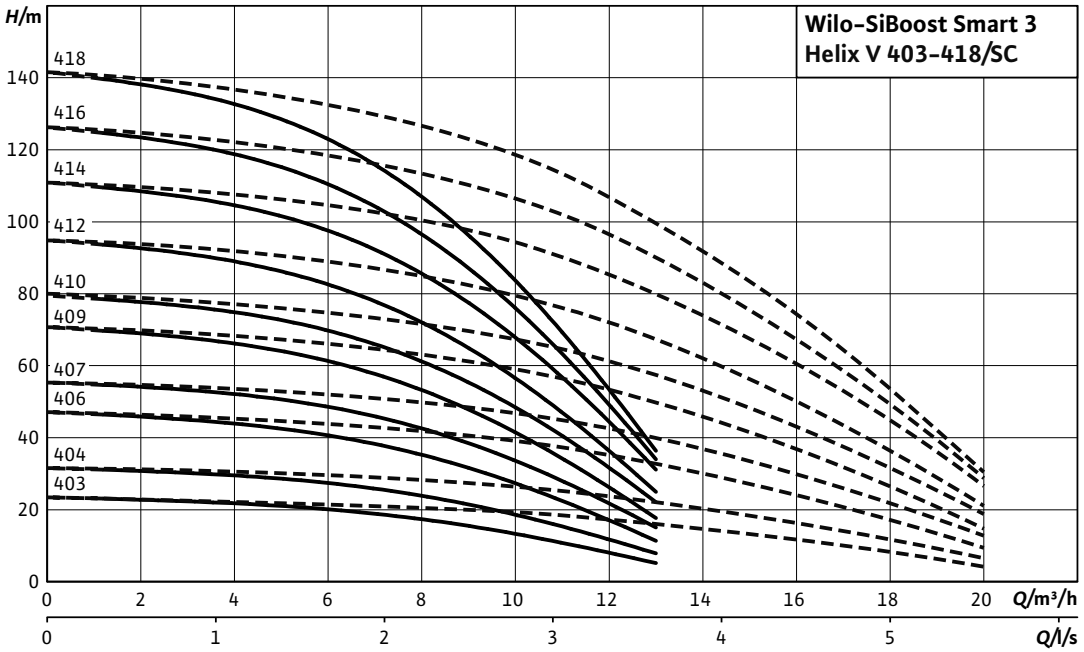

---- including standby pump

Motor data per pump

Wilo-SiBoost Smart 3...	Nominal motor power	Nominal current 3~400 V, 50 Hz	Motor efficiency		
	P_2	I_N	$\eta_{m\ 50\%}$	$\eta_{m\ 75\%}$	$\eta_{m\ 100\%}$
	kW	A	%		
Helix V 403	0.37	0.97	71.0	72.8	72.8
Helix V 404	0.55	1.31	73.0	75.0	75.5
Helix V 406	0.75	1.77	76.0	77.4	77.4
Helix V 407	1.1	2.6	78.0	79.6	79.6
Helix V 409	1.1	2.6	78.0	79.6	79.6
Helix V 410	1.5	3.3	80.0	81.3	81.3
Helix V 412	1.5	3.3	80.0	81.3	81.3
Helix V 414	2.2	4.6	82.0	83.2	83.2
Helix V 416	2.2	4.6	82.0	83.2	83.2
Helix V 418	2.2	4.6	82.0	83.2	83.2

Motor efficiency based on 400 V, 50 Hz

Technical data Wilo-SiBoost Smart (FC) Helix V

Dimension drawing

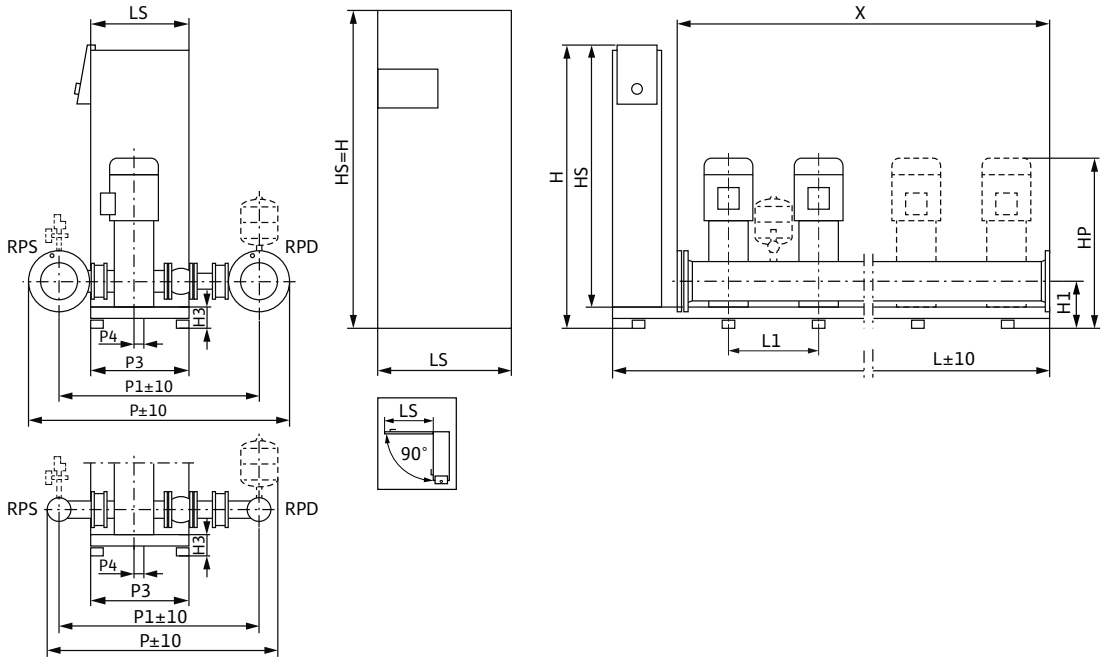

Sample systems are shown.
Accessories (to be ordered separately): Optional WMS low-water cut-out switchgear kit; diaphragm pressure vessel (8 l, PN16)
Installation surface: flat and horizontal
Installation location: dry, well ventilated and frost-proof
To facilitate maintenance, a service area of 1m around the installation is recommended.

Dimensions, weights

Wilo-SiBoost Smart 3...	Nominal diameters of the pipe connections on suction side	Nominal diameters of pipe connections on the pressure side	Dimensions													Weight approx.
	RPS	*RPD*	*H*	*H1*	*H3*	*HP*	*HS*	*L*	*L1*	*LS*	*P*	*P1*	*P3*	*P4*	*X*	*m*
			mm													kg
Helix V 403	R 1½	R ½	1055	140	90	710	950	1150	300	400	694	561	420	30	900	164
Helix V 404	R 1½	R ½	1055	140	90	735	950	1150	300	400	694	561	420	30	900	167
Helix V 406	R 1½	R ½	1055	140	90	805	950	1150	300	400	694	561	420	30	900	176
Helix V 407	R 1½	R ½	1055	140	90	830	950	1150	300	400	694	561	420	30	900	183
Helix V 409	R 1½	R ½	1055	140	90	880	950	1150	300	400	694	561	420	30	900	186
Helix V 410	R 1½	R ½	1055	140	90	937	950	1150	300	400	694	561	420	30	900	201
Helix V 412	R 1½	R ½	1055	140	90	987	950	1150	300	400	694	561	420	30	900	204
Helix V 414	R 1½	R ½	1055	140	90	1037	950	1150	300	400	694	561	420	30	900	216
Helix V 416	R 1½	R ½	1055	140	90	1087	950	1150	300	400	694	561	420	30	900	219
Helix V 418	R 1½	R ½	1055	140	90	1137	950	1150	300	400	694	561	420	30	900	222

Technical data Wilo-SiBoost Smart (FC) Helix V

Pump curves

Wilo-SiBoost Smart 4 Helix V 403-418

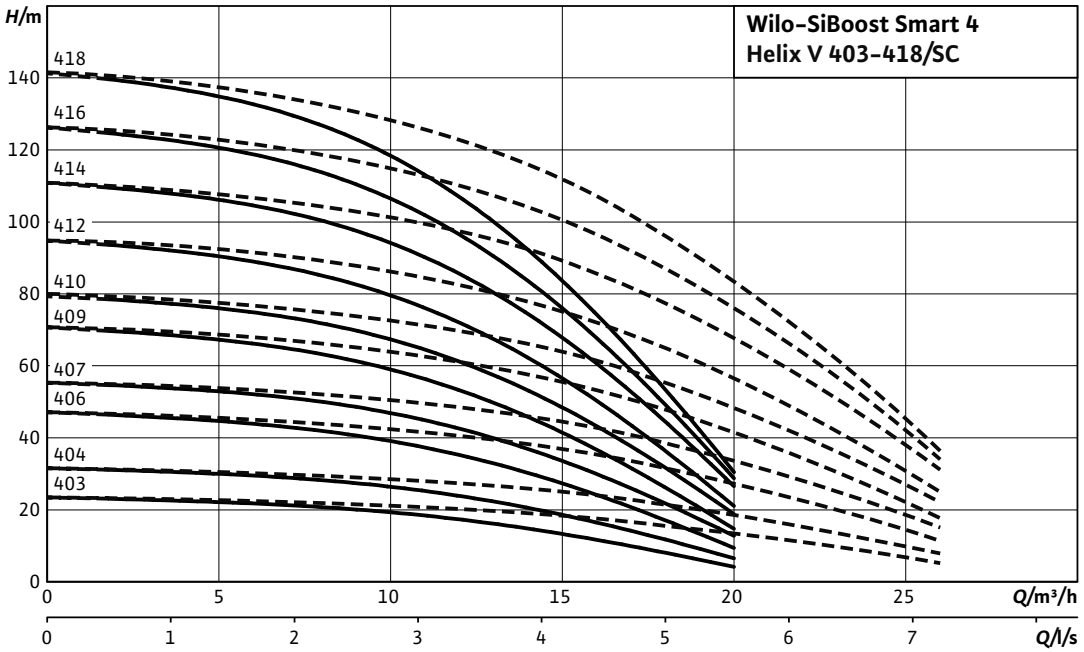

---- including standby pump

Motor data per pump

Wilo-SiBoost Smart 4...	Nominal motor power	Nominal current 3~400 V, 50 Hz	Motor efficiency		
	P_2	I_N	$\eta_{m\ 50\%}$	$\eta_{m\ 75\%}$	$\eta_{m\ 100\%}$
	kW	A	%		
Helix V 403	0.37	0.97	71.0	72.8	72.8
Helix V 404	0.55	1.31	73.0	75.0	75.5
Helix V 406	0.75	1.77	76.0	77.4	77.4
Helix V 407	1.1	2.6	78.0	79.6	79.6
Helix V 409	1.1	2.6	78.0	79.6	79.6
Helix V 410	1.5	3.3	80.0	81.3	81.3
Helix V 412	1.5	3.3	80.0	81.3	81.3
Helix V 414	2.2	4.6	82.0	83.2	83.2
Helix V 416	2.2	4.6	82.0	83.2	83.2
Helix V 418	2.2	4.6	82.0	83.2	83.2

Motor efficiency based on 400 V, 50 Hz

Technical data Wilo-SiBoost Smart (FC) Helix V

Dimension drawing

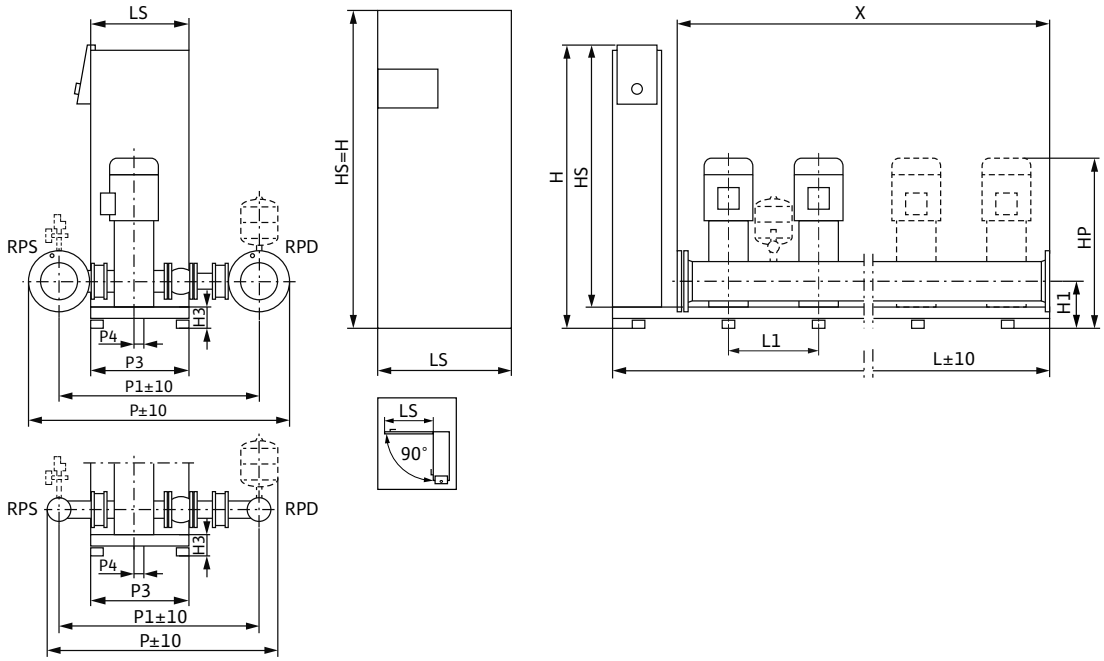

Sample systems are shown.
Accessories (to be ordered separately): Optional WMS low-water cut-out switchgear kit; diaphragm pressure vessel (8 l, PN16)
Installation surface: flat and horizontal
Installation location: dry, well ventilated and frost-proof
To facilitate maintenance, a service area of 1m around the installation is recommended.

Dimensions, weights

Wilo-SiBoost Smart 4...	Nominal diameters of the pipe connections on suction side	Nominal diameters of pipe connections on the pressure side	Dimensions													Weight approx.
	RPS	*RPD*	*H*	*H1*	*H3*	*HP*	*HS*	*L*	*L1*	*LS*	*P*	*P1*	*P3*	*P4*	*X*	*m*
			mm													kg
Helix V 403	R 2	R 2	1055	140	90	710	950	1450	300	400	706	573	420	30	1200	202
Helix V 404	R 2	R 2	1055	140	90	735	950	1450	300	400	706	573	420	30	1200	206
Helix V 406	R 2	R 2	1055	140	90	805	950	1450	300	400	706	573	420	30	1200	218
Helix V 407	R 2	R 2	1055	140	90	830	950	1450	300	400	706	573	420	30	1200	227
Helix V 409	R 2	R 2	1055	140	90	880	950	1450	300	400	706	573	420	30	1200	231
Helix V 410	R 2	R 2	1055	140	90	937	950	1450	300	400	706	573	420	30	1200	251
Helix V 412	R 2	R 2	1055	140	90	987	950	1450	300	400	706	573	420	30	1200	255
Helix V 414	R 2	R 2	1055	140	90	1037	950	1450	300	400	706	573	420	30	1200	271
Helix V 416	R 2	R 2	1055	140	90	1087	950	1450	300	400	706	573	420	30	1200	275
Helix V 418	R 2	R 2	1055	140	90	1137	950	1450	300	400	706	573	420	30	1200	279

Technical data Wilo-SiBoost Smart (FC) Helix V

Pump curves

Wilo-SiBoost Smart 2 Helix V 603-616

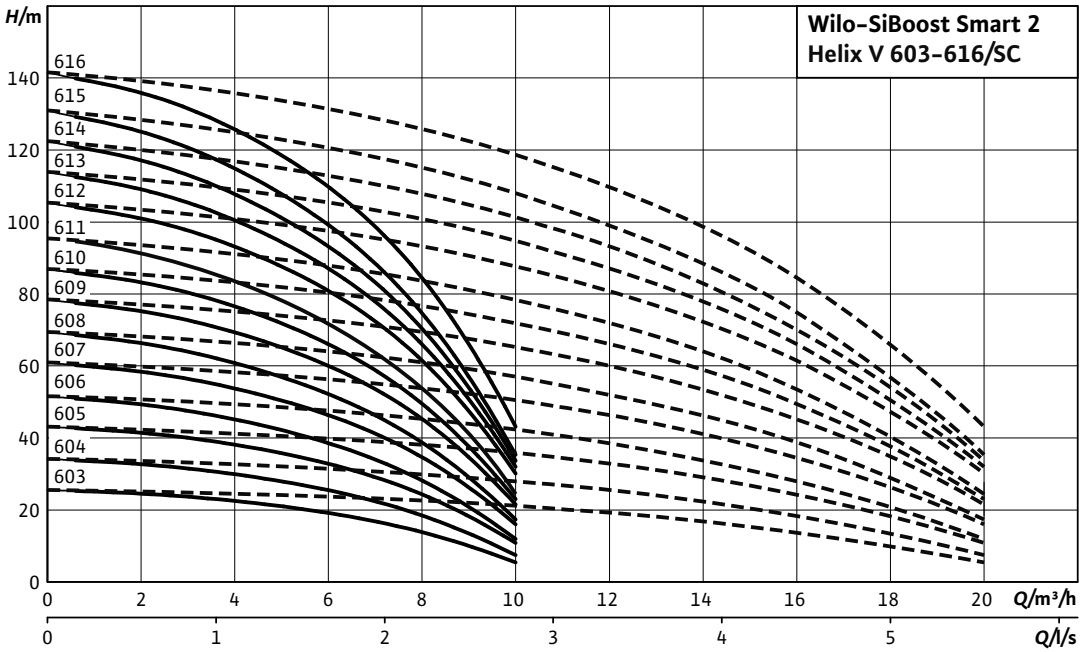

---- including standby pump

Motor data per pump

Wilo-SiBoost Smart 2...	Nominal motor power	Nominal current 3~400 V, 50 Hz	Motor efficiency		
	P_2	I_N	$\eta_{m\ 50\%}$	$\eta_{m\ 75\%}$	$\eta_{m\ 100\%}$
	kW	A	%		
Helix V 603	0.55	1.31	73.0	75.0	75.5
Helix V 604	0.75	1.77	76.0	77.4	77.4
Helix V 605	1.1	2.6	78.0	79.6	79.6
Helix V 606	1.1	2.6	78.0	79.6	79.6
Helix V 607	1.5	3.3	80.0	81.3	81.3
Helix V 608	1.5	3.3	80.0	81.3	81.3
Helix V 609	2.2	4.6	82.0	83.2	83.2
Helix V 610	2.2	4.6	82.0	83.2	83.2
Helix V 611	2.2	4.6	82.0	83.2	83.2
Helix V 612	3	6.7	82.5	85.0	84.6
Helix V 613	3	6.7	82.5	85.0	84.6
Helix V 614	3	6.7	82.5	85.0	84.6
Helix V 615	3	6.7	82.5	85.0	84.6
Helix V 616	4	7.8	85.0	85.8	85.8

Motor efficiency based on 400 V, 50 Hz

Technical data Wilo-SiBoost Smart (FC) Helix V

Dimension drawing

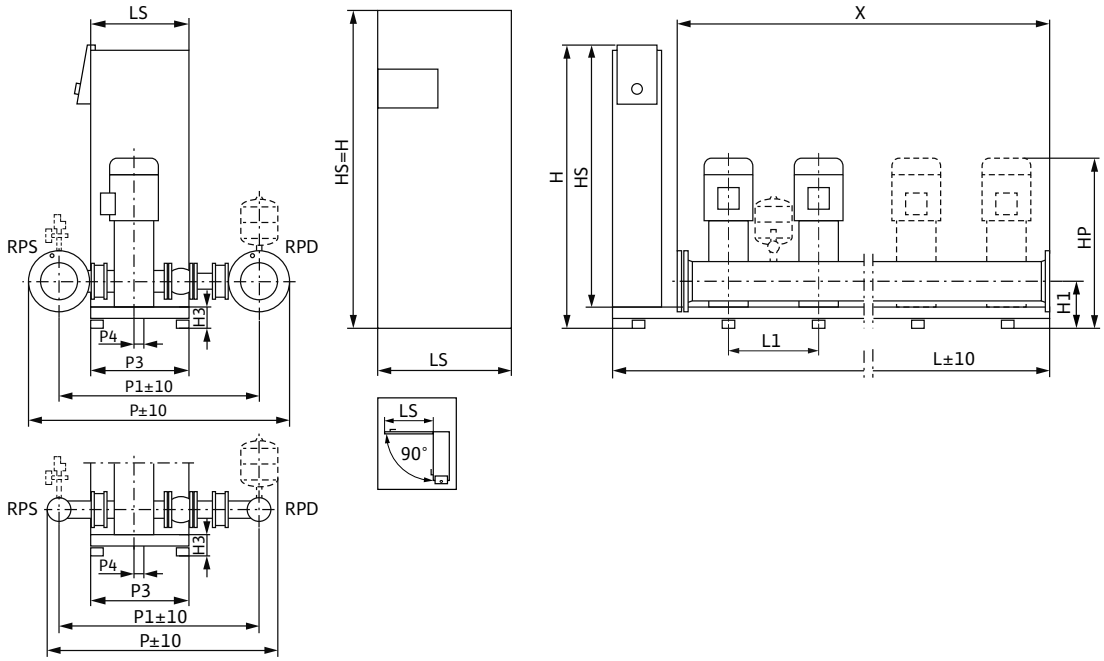

Sample systems are shown.
Accessories (to be ordered separately): Optional WMS low-water cut-out switchgear kit; diaphragm pressure vessel (8 l, PN16)
Installation surface: flat and horizontal
Installation location: dry, well ventilated and frost-proof
To facilitate maintenance, a service area of 1m around the installation is recommended.

Dimensions, weights

Wilo-SiBoost Smart 2...	Nominal diameters of the pipe connections on suction side	Nominal diameters of pipe connections on the pressure side	Dimensions													Weight approx.
	RPS	*RPD*	*H*	*H1*	*H3*	*HP*	*HS*	*L*	*L1*	*LS*	*P*	*P1*	*P3*	*P4*	*X*	*m*
			mm													kg
Helix V 603	R 2	R 2	1055	140	90	748	950	850	300	400	706	573	420	30	600	130
Helix V 604	R 2	R 2	1055	140	90	805	950	850	300	400	706	573	420	30	600	136
Helix V 605	R 2	R 2	1055	140	90	843	950	850	300	400	706	573	420	30	600	141
Helix V 606	R 2	R 2	1055	140	90	880	950	850	300	400	706	573	420	30	600	143
Helix V 607	R 2	R 2	1055	140	90	950	950	850	300	400	706	573	420	30	600	153
Helix V 608	R 2	R 2	1055	140	90	988	950	850	300	400	706	573	420	30	600	155
Helix V 609	R 2	R 2	1055	140	90	1025	950	850	300	400	706	573	420	30	600	161
Helix V 610	R 2	R 2	1055	140	90	1063	950	850	300	400	706	573	420	30	600	163
Helix V 611	R 2	R 2	1055	140	90	1138	950	850	300	400	706	573	420	30	600	165
Helix V 612	R 2	R 2	1055	140	90	1173	950	850	300	400	706	573	420	30	600	173
Helix V 613	R 2	R 2	1055	140	90	1248	950	850	300	400	706	573	420	30	600	175
Helix V 614	R 2	R 2	1055	140	90	1248	950	850	300	400	706	573	420	30	600	177
Helix V 615	R 2	R 2	1055	140	90	1323	950	850	300	400	706	573	420	30	600	179
Helix V 616	R 2	R 2	1055	140	90	1367	950	850	300	400	706	573	420	30	600	202

Technical data Wilo-SiBoost Smart (FC) Helix V

Pump curves

Wilo-SiBoost Smart 3 Helix V 603-616

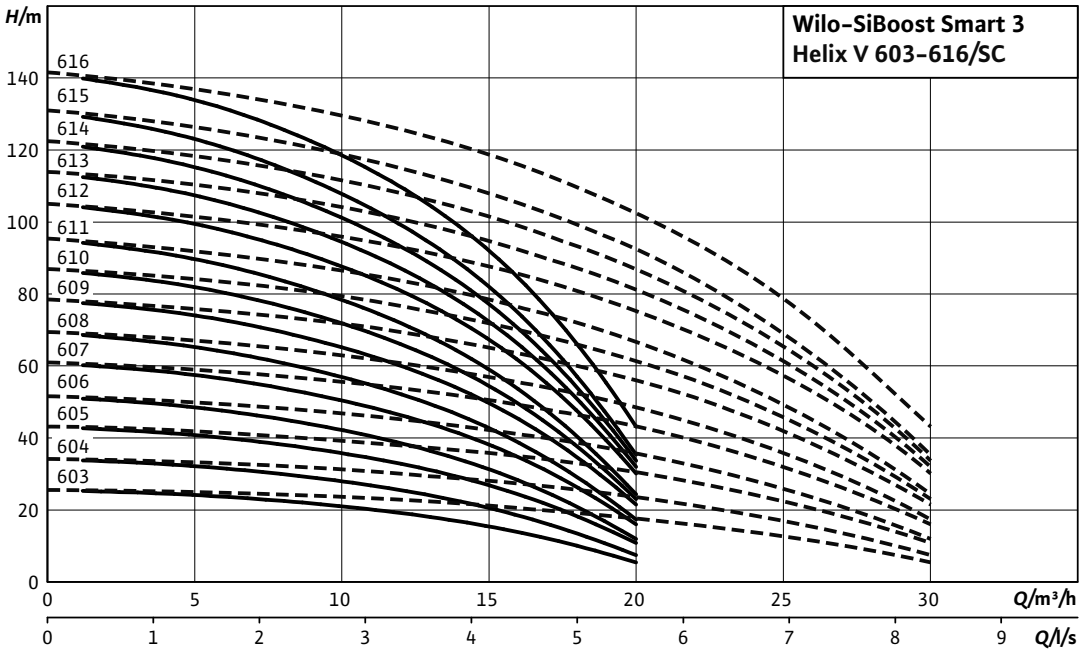

---- including standby pump

Motor data per pump					
Wilo-SiBoost Smart 3...	**Nominal motor power**	**Nominal current 3~400 V, 50 Hz**	**Motor efficiency**		
	P_2	I_N	$\eta_{m\ 50\%}$	$\eta_{m\ 75\%}$	$\eta_{m\ 100\%}$
	kW	A	%		
Helix V 603	0.55	1.31	73.0	75.0	75.5
Helix V 604	0.75	1.77	76.0	77.4	77.4
Helix V 605	1.1	2.6	78.0	79.6	79.6
Helix V 606	1.1	2.6	78.0	79.6	79.6
Helix V 607	1.5	3.3	80.0	81.3	81.3
Helix V 608	1.5	3.3	80.0	81.3	81.3
Helix V 609	2.2	4.6	82.0	83.2	83.2
Helix V 610	2.2	4.6	82.0	83.2	83.2
Helix V 611	2.2	4.6	82.0	83.2	83.2
Helix V 612	3	6.7	82.5	85.0	84.6
Helix V 613	3	6.7	82.5	85.0	84.6
Helix V 614	3	6.7	82.5	85.0	84.6
Helix V 615	3	6.7	82.5	85.0	84.6
Helix V 616	4	7.8	85.0	85.8	85.8

Motor efficiency based on 400 V, 50 Hz

Technical data Wilo-SiBoost Smart (FC) Helix V

Dimension drawing

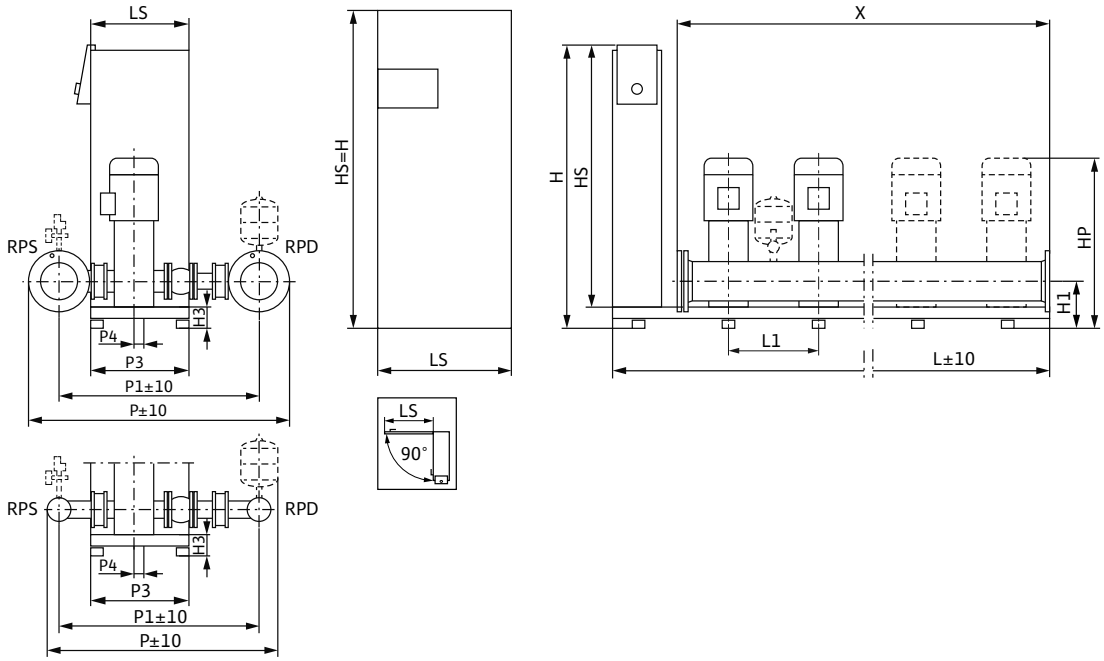

Sample systems are shown.
Accessories (to be ordered separately): Optional WMS low-water cut-out switchgear kit; diaphragm pressure vessel (8 l, PN16)
Installation surface: flat and horizontal
Installation location: dry, well ventilated and frost-proof
To facilitate maintenance, a service area of 1m around the installation is recommended.

Dimensions, weights

Wilo-SiBoost Smart 3...	Nominal diameters of the pipe connections on suction side	Nominal diameters of pipe connections on the pressure side	Dimensions													Weight approx.
	RPS	*RPD*	*H*	*H1*	*H3*	*HP*	*HS*	*L*	*L1*	*LS*	*P*	*P1*	*P3*	*P4*	*X*	*m*
			mm													kg
Helix V 603	R 2½	R 2½	1055	140	90	748	950	1150	300	400	722	589	420	30	900	172
Helix V 604	R 2½	R 2½	1055	140	90	805	950	1150	300	400	722	589	420	30	900	181
Helix V 605	R 2½	R 2½	1055	140	90	843	950	1150	300	400	722	589	420	30	900	188
Helix V 606	R 2½	R 2½	1055	140	90	880	950	1150	300	400	722	589	420	30	900	191
Helix V 607	R 2½	R 2½	1055	140	90	950	950	1150	300	400	722	589	420	30	900	206
Helix V 608	R 2½	R 2½	1055	140	90	988	950	1150	300	400	722	589	420	30	900	209
Helix V 609	R 2½	R 2½	1055	140	90	1025	950	1150	300	400	722	589	420	30	900	218
Helix V 610	R 2½	R 2½	1055	140	90	1063	950	1150	300	400	722	589	420	30	900	221
Helix V 611	R 2½	R 2½	1055	140	90	1138	950	1150	300	400	722	589	420	30	900	224
Helix V 612	R 2½	R 2½	1055	140	90	1173	950	1150	300	400	722	589	420	30	900	236
Helix V 613	R 2½	R 2½	1055	140	90	1248	950	1150	300	400	722	589	420	30	900	239
Helix V 614	R 2½	R 2½	1055	140	90	1248	950	1150	300	400	722	589	420	30	900	242
Helix V 615	R 2½	R 2½	1055	140	90	1323	950	1150	300	400	722	589	420	30	900	245
Helix V 616	R 2½	R 2½	1055	140	90	1367	950	1150	300	400	722	589	420	30	900	279

Technical data Wilo-SiBoost Smart (FC) Helix V

Pump curves

Wilo-SiBoost Smart 4 Helix V 603-616

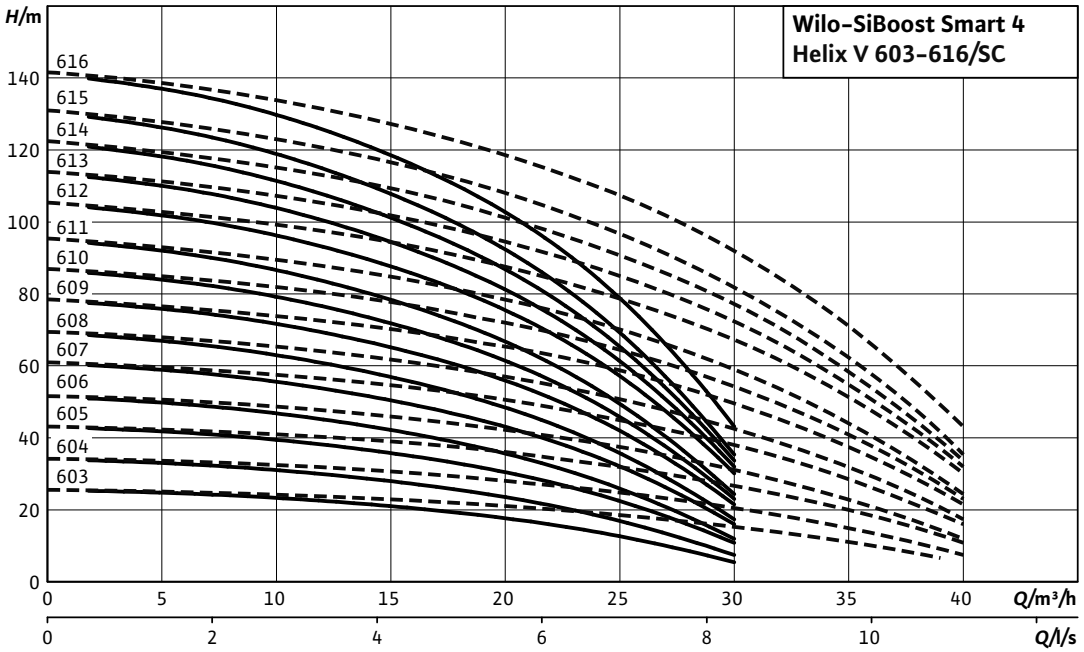

---- including standby pump

Motor data per pump

Wilo-SiBoost Smart 4...	Nominal motor power	Nominal current 3~400 V, 50 Hz	Motor efficiency		
	P_2	I_N	$\eta_{m\ 50\%}$	$\eta_{m\ 75\%}$	$\eta_{m\ 100\%}$
	kW	A	%		
Helix V 603	0.55	1.31	73.0	75.0	75.5
Helix V 604	0.75	1.77	76.0	77.4	77.4
Helix V 605	1.1	2.6	78.0	79.6	79.6
Helix V 606	1.1	2.6	78.0	79.6	79.6
Helix V 607	1.5	3.3	80.0	81.3	81.3
Helix V 608	1.5	3.3	80.0	81.3	81.3
Helix V 609	2.2	4.6	82.0	83.2	83.2
Helix V 610	2.2	4.6	82.0	83.2	83.2
Helix V 611	2.2	4.6	82.0	83.2	83.2
Helix V 612	3	6.7	82.5	85.0	84.6
Helix V 613	3	6.7	82.5	85.0	84.6
Helix V 614	3	6.7	82.5	85.0	84.6
Helix V 615	3	6.7	82.5	85.0	84.6
Helix V 616	4	7.8	85.0	85.8	85.8

Motor efficiency based on 400 V, 50 Hz

Technical data Wilo-SiBoost Smart (FC) Helix V

Dimension drawing

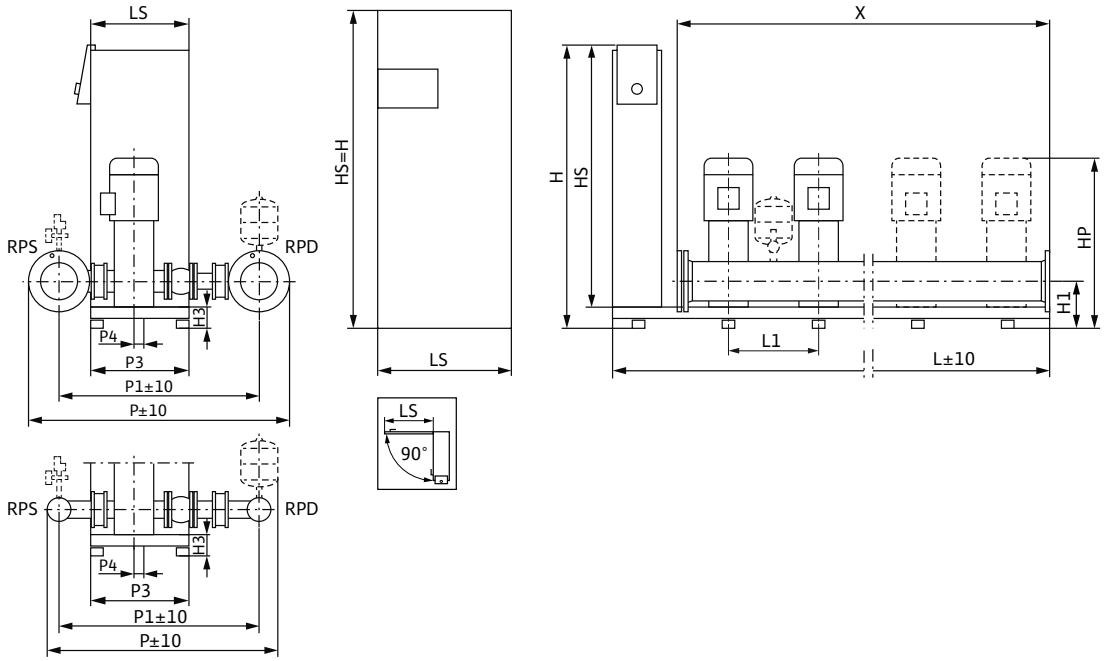

Sample systems are shown.
Accessories (to be ordered separately): Optional WMS low-water cut-out switchgear kit; diaphragm pressure vessel (8 l, PN16)
Installation surface: flat and horizontal
Installation location: dry, well ventilated and frost-proof
To facilitate maintenance, a service area of 1m around the installation is recommended.

Dimensions, weights

Wilo-SiBoost Smart 4...	Nominal diameters of the pipe connections on suction side	Nominal diameters of pipe connections on the pressure side	Dimensions													Weight approx.
	RPS	*RPD*	*H*	*H1*	*H3*	*HP*	*HS*	*L*	*L1*	*LS*	*P*	*P1*	*P3*	*P4*	*X*	*m*
			mm													kg
Helix V 603	R 2½	R 2½	1055	140	90	748	950	1450	300	400	722	589	420	30	1200	212
Helix V 604	R 2½	R 2½	1055	140	90	805	950	1450	300	400	722	589	420	30	1200	224
Helix V 605	R 2½	R 2½	1055	140	90	843	950	1450	300	400	722	589	420	30	1200	233
Helix V 606	R 2½	R 2½	1055	140	90	880	950	1450	300	400	722	589	420	30	1200	237
Helix V 607	R 2½	R 2½	1055	140	90	950	950	1450	300	400	722	589	420	30	1200	257
Helix V 608	R 2½	R 2½	1055	140	90	988	950	1450	300	400	722	589	420	30	1200	261
Helix V 609	R 2½	R 2½	1055	140	90	1025	950	1450	300	400	722	589	420	30	1200	273
Helix V 610	R 2½	R 2½	1055	140	90	1063	950	1450	300	400	722	589	420	30	1200	277
Helix V 611	R 2½	R 2½	1055	140	90	1138	950	1450	300	400	722	589	420	30	1200	281
Helix V 612	R 2½	R 2½	1055	140	90	1173	950	1450	300	400	722	589	420	30	1200	297
Helix V 613	R 2½	R 2½	1055	140	90	1248	950	1450	300	400	722	589	420	30	1200	301
Helix V 614	R 2½	R 2½	1055	140	90	1248	950	1450	300	400	722	589	420	30	1200	305
Helix V 615	R 2½	R 2½	1055	140	90	1323	950	1450	300	400	722	589	420	30	1200	309
Helix V 616	R 2½	R 2½	1055	140	90	1367	950	1450	300	400	722	589	420	30	1200	354

Technical data Wilo-SiBoost Smart (FC) Helix V

Pump curves

Wilo-SiBoost Smart 2 Helix V 1002-1015

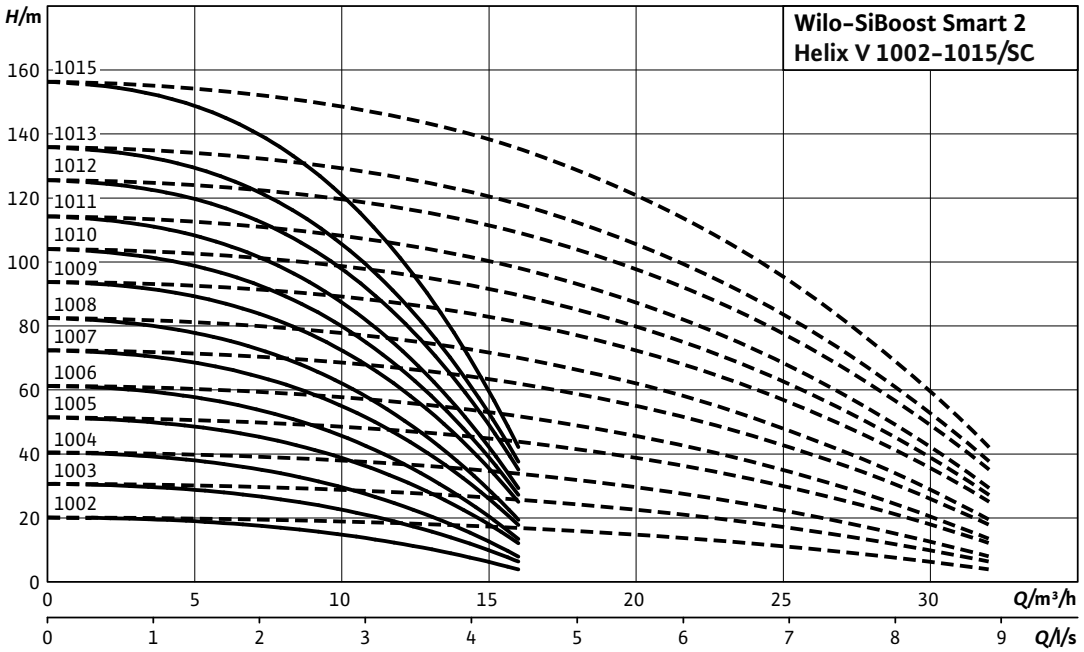

---- including standby pump

Motor data per pump					
Wilo-SiBoost Smart 2...	**Nominal motor power**	**Nominal current 3~400 V, 50 Hz**	**Motor efficiency**		
	P_2	I_N	$\eta_{m\ 50\%}$	$\eta_{m\ 75\%}$	$\eta_{m\ 100\%}$
	kW	A	%		
Helix V 1002	0.75	1.77	76.0	77.4	77.4
Helix V 1003	1.1	2.6	78.0	79.6	79.6
Helix V 1004	1.5	3.3	80.0	81.3	81.3
Helix V 1005	2.2	4.6	82.0	83.2	83.2
Helix V 1006	2.2	4.6	82.0	83.2	83.2
Helix V 1007	3	6.7	82.5	85.0	84.6
Helix V 1008	3	6.7	82.5	85.0	84.6
Helix V 1009	4	7.8	85.0	85.8	85.8
Helix V 1010	4	7.8	85.0	85.8	85.8
Helix V 1011	4	7.8	85.0	85.8	85.8
Helix V 1012	5.5	10.7	86.5	88.8	88.6
Helix V 1013	5.5	10.7	86.5	88.8	88.6
Helix V 1015	5.5	10.7	86.5	88.8	88.6

Motor efficiency based on 400 V, 50 Hz

Technical data Wilo-SiBoost Smart (FC) Helix V

Dimension drawing

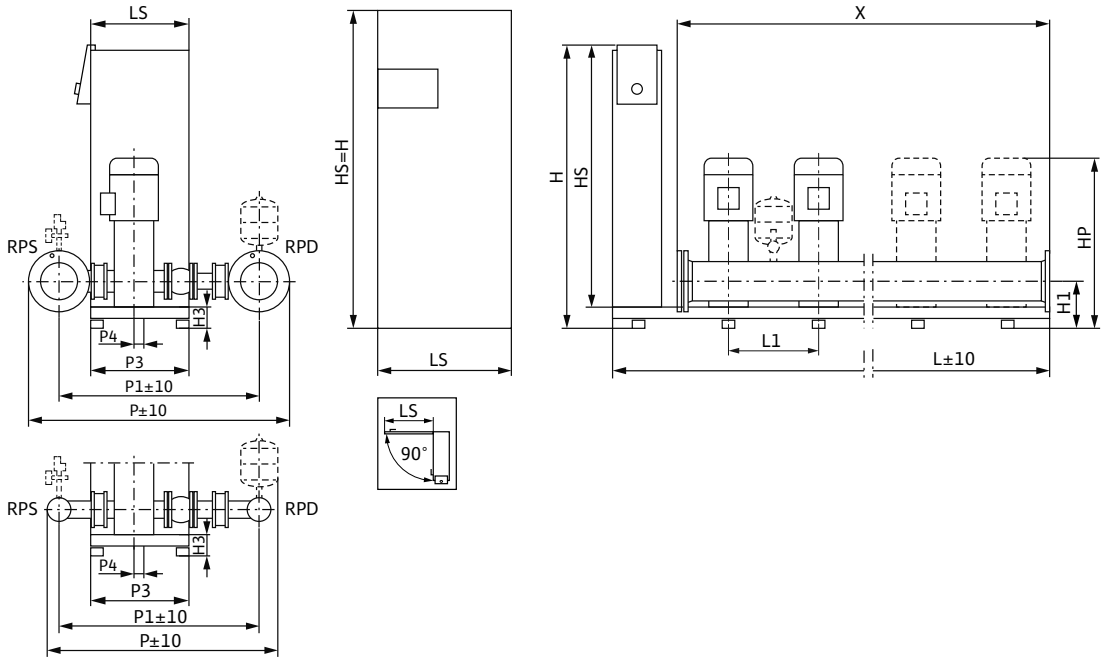

Sample systems are shown.
Accessories (to be ordered separately): Optional WMS low-water cut-out switchgear kit; diaphragm pressure vessel (8 l, PN16)
Installation surface: flat and horizontal
Installation location: dry, well ventilated and frost-proof
To facilitate maintenance, a service area of 1m around the installation is recommended.

Dimensions, weights

Wilo-SiBoost Smart 2...	Nominal diameters of the pipe connections on suction side	Nominal diameters of pipe connections on the pressure side	Dimensions													Weight approx.
	RPS	*RPD*	*H*	*H1*	*H3*	*HP*	*HS*	*L*	*L1*	*LS*	*P*	*P1*	*P3*	*P4*	*X*	*m*
			mm													kg
Helix V 1002	R 2½	R 2½	1055	170	90	751	950	850	300	400	845	704	420	30	600	145
Helix V 1003	R 2½	R 2½	1055	170	90	789	950	850	300	400	845	704	420	30	600	150
Helix V 1004	R 2½	R 2½	1055	170	90	859	950	850	300	400	845	704	420	30	600	162
Helix V 1005	R 2½	R 2½	1055	170	90	896	950	850	300	400	845	704	420	30	600	168
Helix V 1006	R 2½	R 2½	1055	170	90	934	950	850	300	400	845	704	420	30	600	170
Helix V 1007	R 2½	R 2½	1055	170	90	1007	950	850	300	400	845	704	420	30	600	178
Helix V 1008	R 2½	R 2½	1055	170	90	1044	950	850	300	400	845	704	420	30	600	180
Helix V 1009	R 2½	R 2½	1055	170	90	1125	950	850	300	400	845	704	420	30	600	205
Helix V 1010	R 2½	R 2½	1055	170	90	1163	950	850	300	400	845	704	420	30	600	207
Helix V 1011	R 2½	R 2½	1055	170	90	1238	950	850	300	400	845	704	420	30	600	209
Helix V 1012	R 2½	R 2½	1405	170	90	1230	1300	950	300	400	845	704	420	30	600	256
Helix V 1013	R 2½	R 2½	1405	170	90	1305	1300	950	300	400	845	704	420	30	600	258
Helix V 1015	R 2½	R 2½	1405	170	90	1380	1300	950	300	400	845	704	420	30	600	262

Technical data Wilo-SiBoost Smart (FC) Helix V

Pump curves

Wilo-SiBoost Smart 3 Helix V 1002-1015

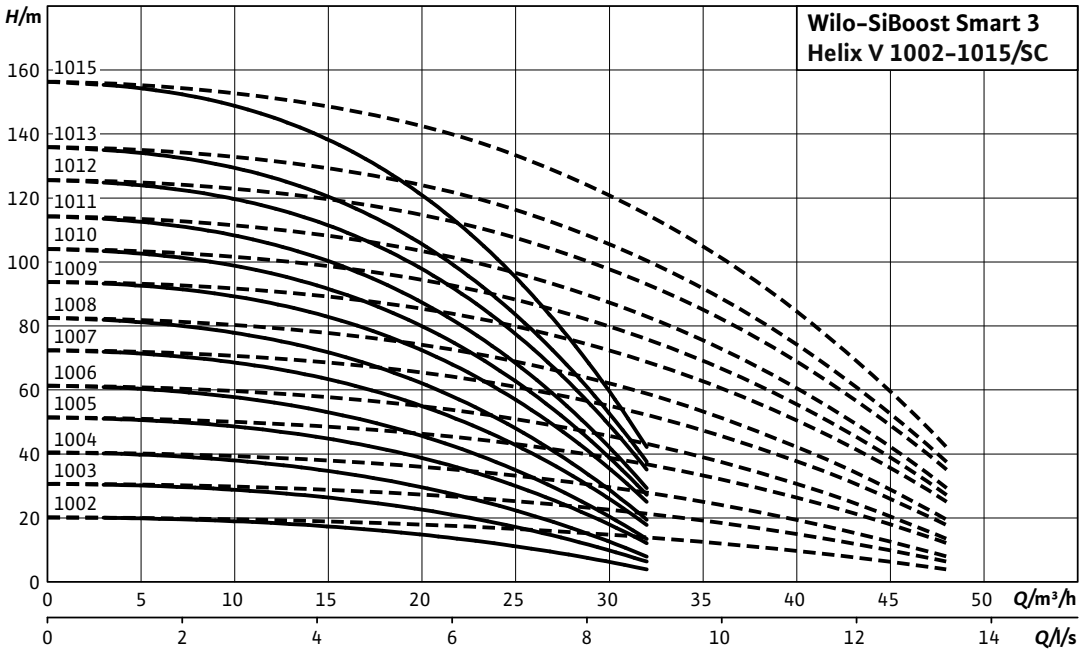

---- including standby pump

Motor data per pump

Wilo-SiBoost Smart 3...	Nominal motor power	Nominal current 3~400 V, 50 Hz	Motor efficiency		
	P_2	I_N	$\eta_{m\ 50\%}$	$\eta_{m\ 75\%}$	$\eta_{m\ 100\%}$
	kW	A	%		
Helix V 1002	0.75	1.77	76.0	77.4	77.4
Helix V 1003	1.1	2.6	78.0	79.6	79.6
Helix V 1004	1.5	3.3	80.0	81.3	81.3
Helix V 1005	2.2	4.6	82.0	83.2	83.2
Helix V 1006	2.2	4.6	82.0	83.2	83.2
Helix V 1007	3	6.7	82.5	85.0	84.6
Helix V 1008	3	6.7	82.5	85.0	84.6
Helix V 1009	4	7.8	85.0	85.8	85.8
Helix V 1010	4	7.8	85.0	85.8	85.8
Helix V 1011	4	7.8	85.0	85.8	85.8
Helix V 1012	5.5	10.7	85.2	86.9	88.1
Helix V 1013	5.5	10.7	85.2	86.9	88.1
Helix V 1015	5.5	10.7	85.2	86.9	88.1

Motor efficiency based on 400 V, 50 Hz

Technical data Wilo-SiBoost Smart (FC) Helix V

Dimension drawing

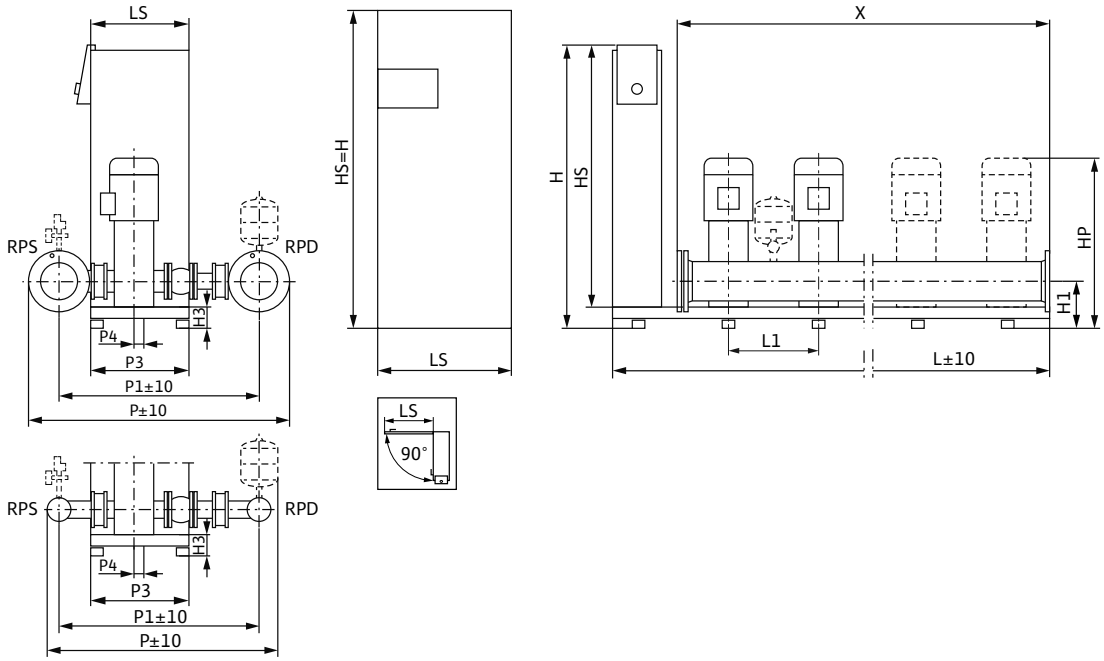

Sample systems are shown.
Accessories (to be ordered separately): Optional WMS low-water cut-out switchgear kit; diaphragm pressure vessel (8 l, PN16)
Installation surface: flat and horizontal
Installation location: dry, well ventilated and frost-proof
To facilitate maintenance, a service area of 1m around the installation is recommended.

Dimensions, weights

Wilo-SiBoost Smart 3...	Nominal diameters of the pipe connections on suction side	Nominal diameters of pipe connections on the pressure side	Dimensions													Weight approx.
	RPS	*RPD*	*H*	*H1*	*H3*	*HP*	*HS*	*L*	*L1*	*LS*	*P*	*P1*	*P3*	*P4*	*X*	*m*
			mm													kg
Helix V 1002	R 2½	R 2½	1055	170	90	751	950	1150	300	400	845	704	420	30	900	192
Helix V 1003	R 2½	R 2½	1055	170	90	789	950	1150	300	400	845	704	420	30	900	199
Helix V 1004	R 2½	R 2½	1055	170	90	859	950	1150	300	400	845	704	420	30	900	217
Helix V 1005	R 2½	R 2½	1055	170	90	896	950	1150	300	400	845	704	420	30	900	226
Helix V 1006	R 2½	R 2½	1055	170	90	934	950	1150	300	400	845	704	420	30	900	229
Helix V 1007	R 2½	R 2½	1055	170	90	1007	950	1150	300	400	845	704	420	30	900	241
Helix V 1008	R 2½	R 2½	1055	170	90	1044	950	1150	300	400	845	704	420	30	900	244
Helix V 1009	R 2½	R 2½	1055	170	90	1125	950	1150	300	400	845	704	420	30	900	281
Helix V 1010	R 2½	R 2½	1055	170	90	1163	950	1150	300	400	845	704	420	30	900	284
Helix V 1011	R 2½	R 2½	1055	170	90	1238	950	1150	300	400	845	704	420	30	900	287
Helix V 1012	R 2½	R 2½	1405	170	90	1230	1300	1250	300	400	845	704	420	30	900	342
Helix V 1013	R 2½	R 2½	1405	170	90	1305	1300	1250	300	400	845	704	420	30	900	345
Helix V 1015	R 2½	R 2½	1405	170	90	1380	1300	1250	300	400	845	704	420	30	900	351

Technical data Wilo-SiBoost Smart (FC) Helix V

Pump curves

Wilo-SiBoost Smart 4 Helix V 1002-1015

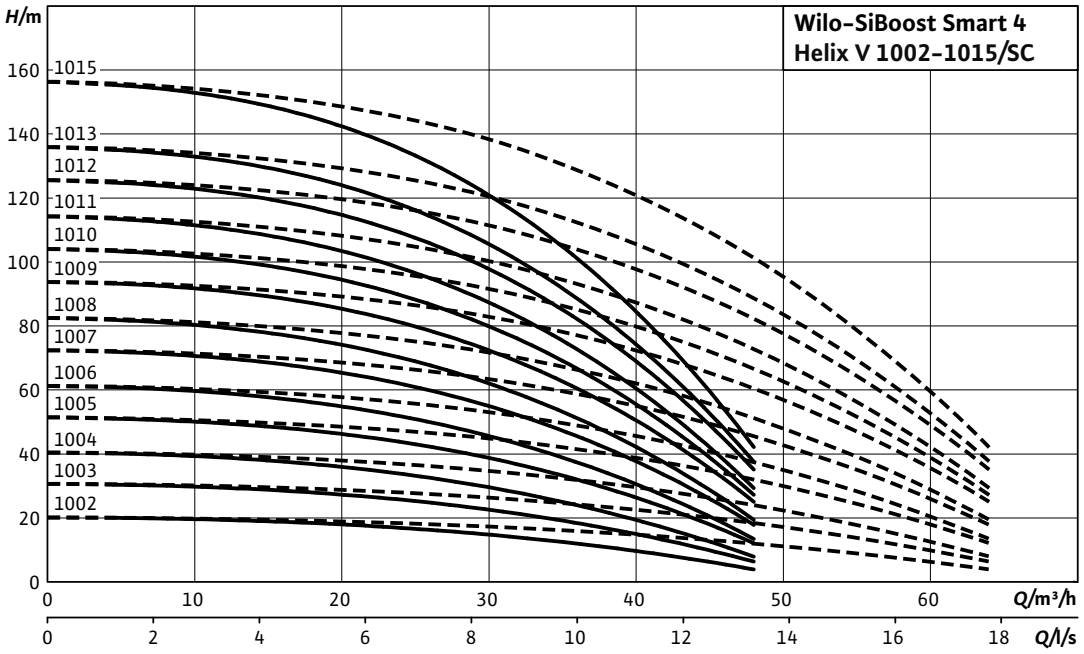

---- including standby pump

Motor data per pump

Wilo-SiBoost Smart 4...	Nominal motor power	Nominal current 3~400 V, 50 Hz	Motor efficiency		
	P_2	I_N	$\eta_{m\ 50\%}$	$\eta_{m\ 75\%}$	$\eta_{m\ 100\%}$
	kW	A	%		
Helix V 1002	0.75	1.77	76.0	77.4	77.4
Helix V 1003	1.1	2.6	78.0	79.6	79.6
Helix V 1004	1.5	3.3	80.0	81.3	81.3
Helix V 1005	2.2	4.6	82.0	83.2	83.2
Helix V 1006	2.2	4.6	82.0	83.2	83.2
Helix V 1007	3	6.7	82.5	85.0	84.6
Helix V 1008	3	6.7	82.5	85.0	84.6
Helix V 1009	4	7.8	85.0	85.8	85.8
Helix V 1010	4	7.8	85.0	85.8	85.8
Helix V 1011	4	7.8	85.0	85.8	85.8
Helix V 1012	5.5	10.7	85.2	86.9	88.1
Helix V 1013	5.5	10.7	85.2	86.9	88.1
Helix V 1015	5.5	10.7	85.2	86.9	88.1

Motor efficiency based on 400 V, 50 Hz

Technical data Wilo-SiBoost Smart (FC) Helix V

Dimension drawing

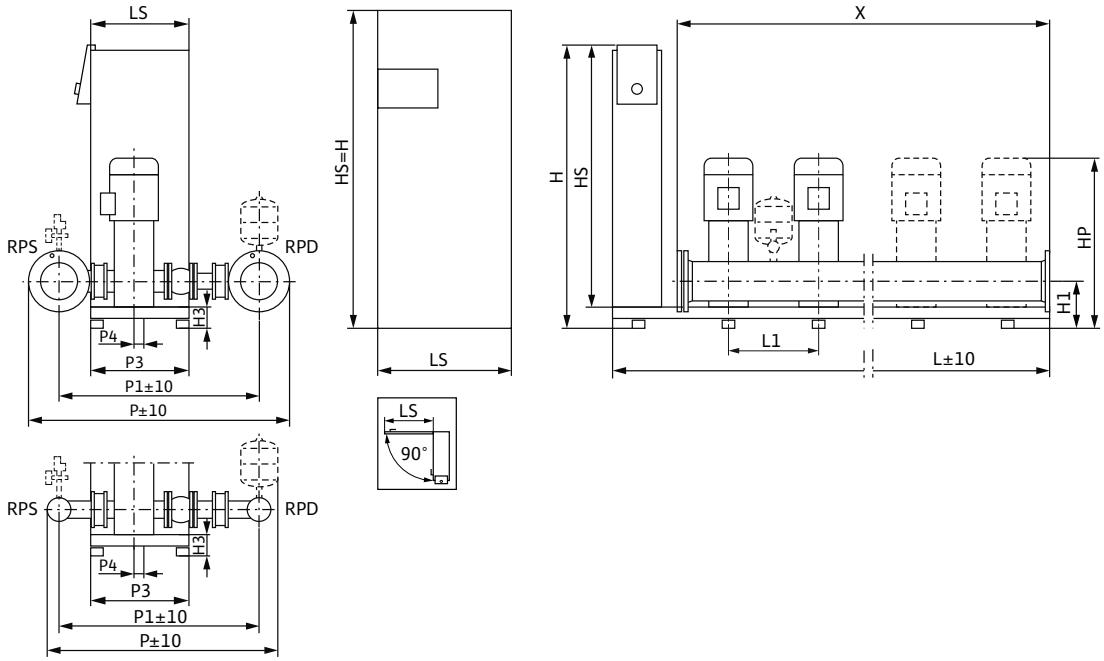

Sample systems are shown.
Accessories (to be ordered separately): Optional WMS low-water cut-out switchgear kit; diaphragm pressure vessel (8 l, PN16)
Installation surface: flat and horizontal
Installation location: dry, well ventilated and frost-proof
To facilitate maintenance, a service area of 1m around the installation is recommended.

Dimensions, weights

Wilo-SiBoost Smart 4...	Nominal diameters of the pipe connections on suction side	Nominal diameters of pipe connections on the pressure side	Dimensions													Weight approx.
	RPS	*RPD*	*H*	*H1*	*H3*	*HP*	*HS*	*L*	*L1*	*LS*	*P*	*P1*	*P3*	*P4*	*X*	*m*
			mm													kg
Helix V 1002	R 3	R 3	1055	170	90	751	950	1450	300	400	865	717	420	30	1200	209
Helix V 1003	R 3	R 3	1055	170	90	789	950	1450	300	400	845	717	420	30	1200	216
Helix V 1004	R 3	R 3	1055	170	90	859	950	1450	300	400	845	717	420	30	1200	234
Helix V 1005	R 3	R 3	1055	170	90	896	950	1450	300	400	845	717	420	30	1200	243
Helix V 1006	R 3	R 3	1055	170	90	934	950	1450	300	400	845	717	420	30	1200	246
Helix V 1007	R 3	R 3	1055	170	90	1007	950	1450	300	400	845	717	420	30	1200	258
Helix V 1008	R 3	R 3	1055	170	90	1044	950	1450	300	400	845	717	420	30	1200	261
Helix V 1009	R 3	R 3	1055	170	90	1125	950	1450	300	400	845	717	420	30	1200	298
Helix V 1010	R 3	R 3	1055	170	90	1163	950	1450	300	400	845	717	420	30	1200	301
Helix V 1011	R 3	R 3	1055	170	90	1238	950	1450	300	400	845	717	420	30	1200	304
Helix V 1012	R 3	R 3	1405	170	90	1230	1300	1550	300	400	915	717	420	30	1200	360
Helix V 1013	R 3	R 3	1405	170	90	1305	1300	1550	300	400	915	717	420	30	1200	363
Helix V 1015	R 3	R 3	1405	170	90	1380	1300	1550	300	400	915	717	420	30	1200	369

Technical data Wilo-SiBoost Smart (FC) Helix V

Pump curves

Wilo-SiBoost Smart 2 Helix V 1603-1608

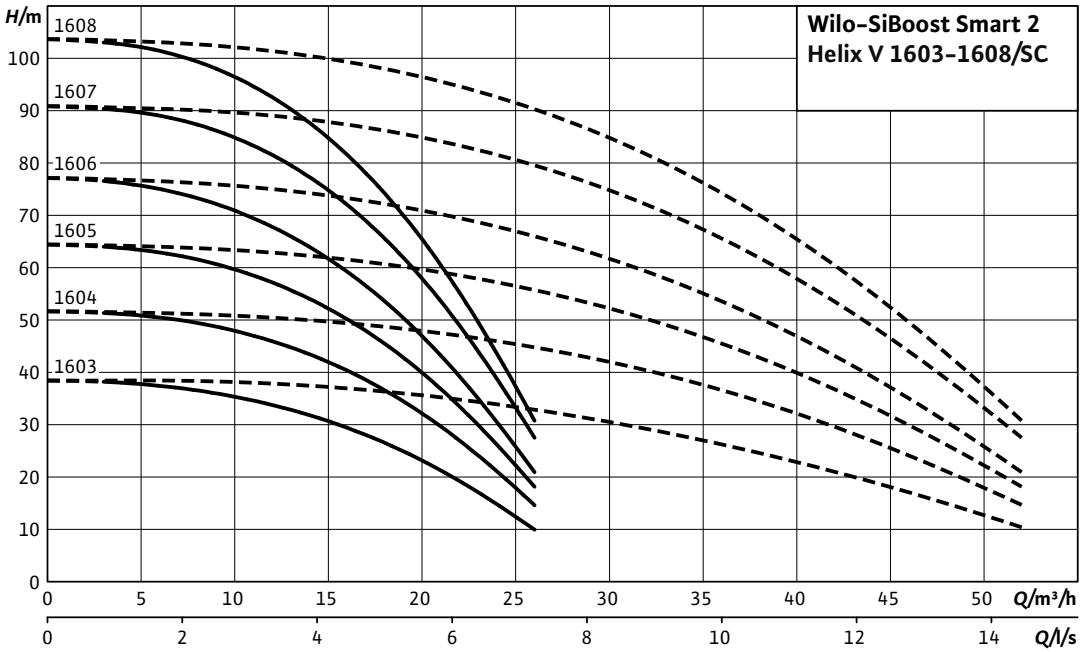

---- including standby pump

Motor data per pump					
Wilo-SiBoost Smart 2...	**Nominal motor power**	**Nominal current 3~400 V, 50 Hz**	**Motor efficiency**		
	P_2	I_N	$\eta_{m\ 50\%}$	$\eta_{m\ 75\%}$	$\eta_{m\ 100\%}$
	kW	A	%		
Helix V 1603	2.2	4.6	82.0	83.2	83.2
Helix V 1604	3	6.7	82.5	85.0	84.6
Helix V 1605	4	7.8	85.0	85.8	85.8
Helix V 1606	4	7.8	85.0	85.8	85.8
Helix V 1607	5.5	10.7	85.2	86.9	88.1
Helix V 1608	5.5	10.7	85.2	86.9	88.1

Motor efficiency based on 400 V, 50 Hz

Technical data Wilo-SiBoost Smart (FC) Helix V

Dimension drawing

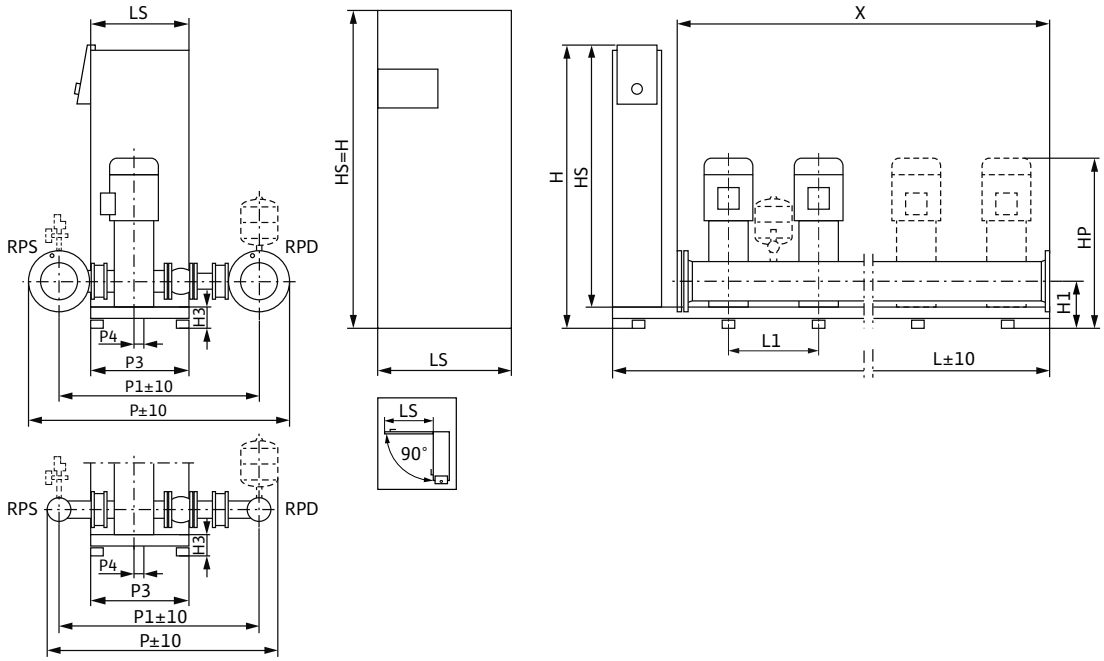

Sample systems are shown.
Accessories (to be ordered separately): Optional WMS low-water cut-out switchgear kit; diaphragm pressure vessel (8 l, PN16)
Installation surface: flat and horizontal
Installation location: dry, well ventilated and frost-proof
To facilitate maintenance, a service area of 1m around the installation is recommended.

Dimensions, weights

Wilo-SiBoost Smart 2...	Nominal diameters of the pipe connections on suction side	Nominal diameters of pipe connections on the pressure side	Dimensions													Weight approx.
	RPS	*RPD*	*H*	*H1*	*H3*	*HP*	*HS*	*L*	*L1*	*LS*	*P*	*P1*	*P3*	*P4*	*X*	*m*
			mm													kg
Helix V 1603	R 2½	R 2½	1055	180	90	869	950	850	300	400	862	720	420	30	600	171
Helix V 1604	R 2½	R 2½	1055	180	90	954	950	850	300	400	862	720	420	30	600	181
Helix V 1605	R 2½	R 2½	1055	180	90	1050	950	850	300	400	862	720	420	30	600	204
Helix V 1606	R 2½	R 2½	1055	180	90	1100	950	850	300	400	862	720	420	30	600	206
Helix V 1607	R 2½	R 2½	1405	180	90	1140	1300	950	300	400	862	720	420	30	600	277
Helix V 1608	R 2½	R 2½	1405	180	90	1190	1300	950	300	400	862	720	420	30	600	281

Technical data Wilo-SiBoost Smart (FC) Helix V

Pump curves

Wilo-SiBoost Smart 3 Helix V 1603-1608

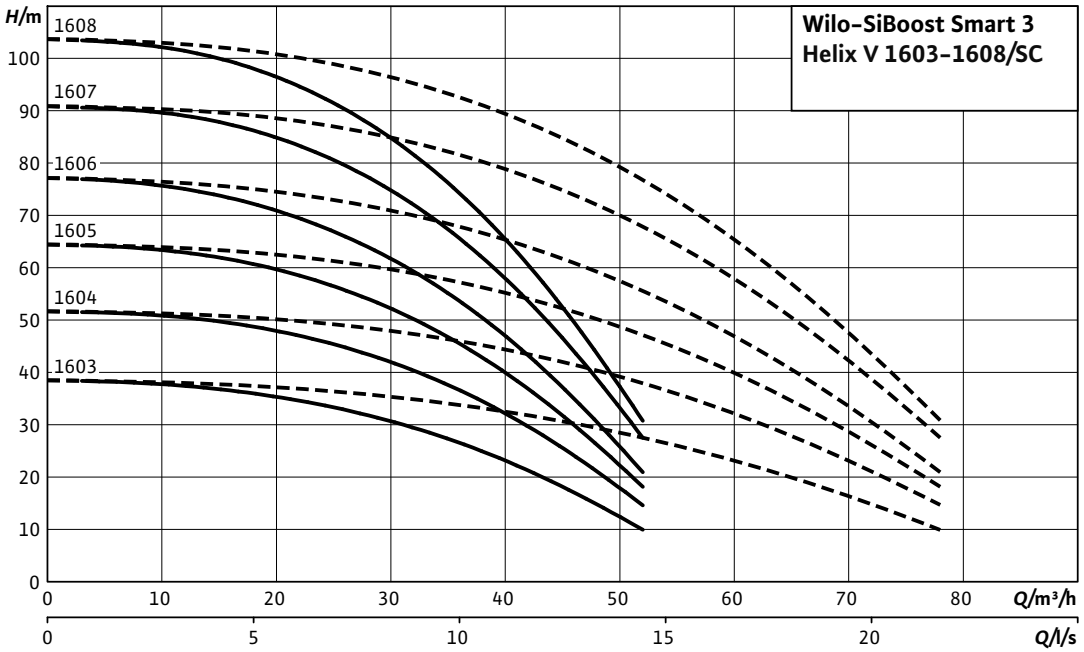

---- including standby pump

Motor data per pump

Wilo-SiBoost Smart 3...	Nominal motor power	Nominal current 3~400 V, 50 Hz	Motor efficiency		
	P_2	I_N	$\eta_{m\ 50\%}$	$\eta_{m\ 75\%}$	$\eta_{m\ 100\%}$
	kW	A	%		
Helix V 1603	2.2	4.6	82.0	83.2	83.2
Helix V 1604	3	6.7	82.5	85.0	84.6
Helix V 1605	4	7.8	85.0	85.8	85.8
Helix V 1606	4	7.8	85.0	85.8	85.8
Helix V 1607	5.5	10.7	85.2	86.9	88.1
Helix V 1608	5.5	10.7	85.2	86.9	88.1

Motor efficiency based on 400 V, 50 Hz

Technical data Wilo-SiBoost Smart (FC) Helix V

Dimension drawing

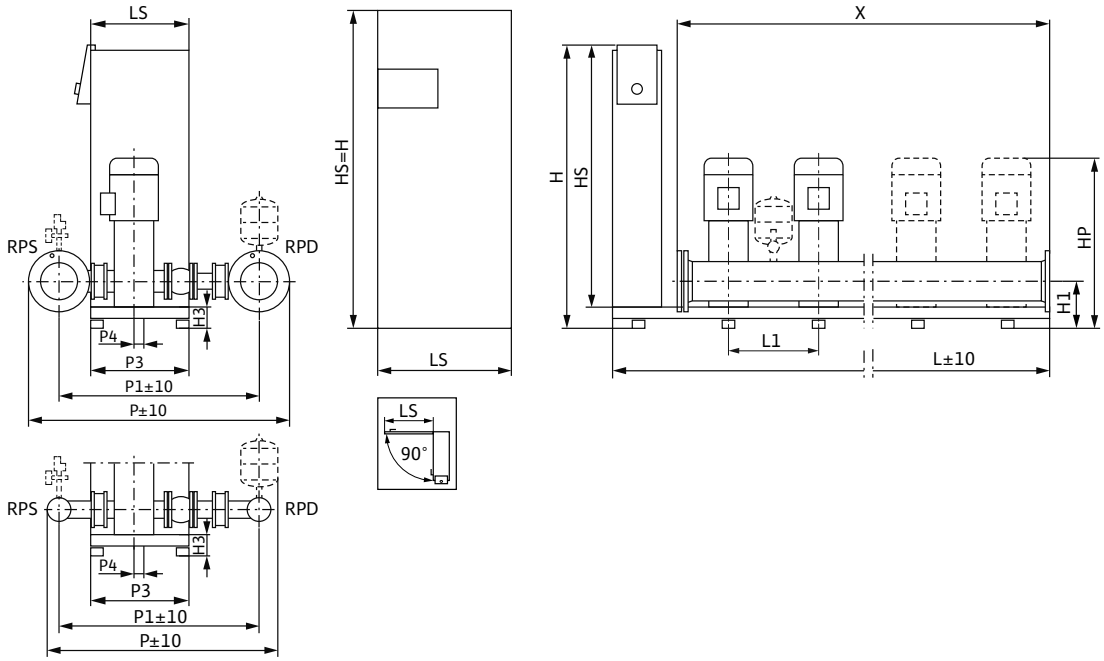

Sample systems are shown.
Accessories (to be ordered separately): Optional WMS low-water cut-out switchgear kit; diaphragm pressure vessel (8 l, PN16)
Installation surface: flat and horizontal
Installation location: dry, well ventilated and frost-proof
To facilitate maintenance, a service area of 1m around the installation is recommended.

Dimensions, weights

Wilo-SiBoost Smart 3...	Nominal diameters of the pipe connections on suction side	Nominal diameters of pipe connections on the pressure side	Dimensions													Weight approx.
	RPS	*RPD*	*H*	*H1*	*H3*	*HP*	*HS*	*L*	*L1*	*LS*	*P*	*P1*	*P3*	*P4*	*X*	*m*
			mm													kg
Helix V 1603	R 3	R 3	1055	180	90	869	950	1150	300	400	883	735	420	30	900	232
Helix V 1604	R 3	R 3	1055	180	90	954	950	1150	300	400	883	735	420	30	900	247
Helix V 1605	R 3	R 3	1055	180	90	1050	950	1150	300	400	883	735	420	30	900	281
Helix V 1606	R 3	R 3	1055	180	90	1100	950	1150	300	400	883	735	420	30	900	284
Helix V 1607	R 3	R 3	1405	180	90	1140	1300	1250	300	400	883	735	420	30	900	375
Helix V 1608	R 3	R 3	1405	180	90	1190	1300	1250	300	400	883	735	420	30	900	381

Technical data Wilo-SiBoost Smart (FC) Helix V

Pump curves

Wilo-SiBoost Smart 4 Helix V 1603-1608

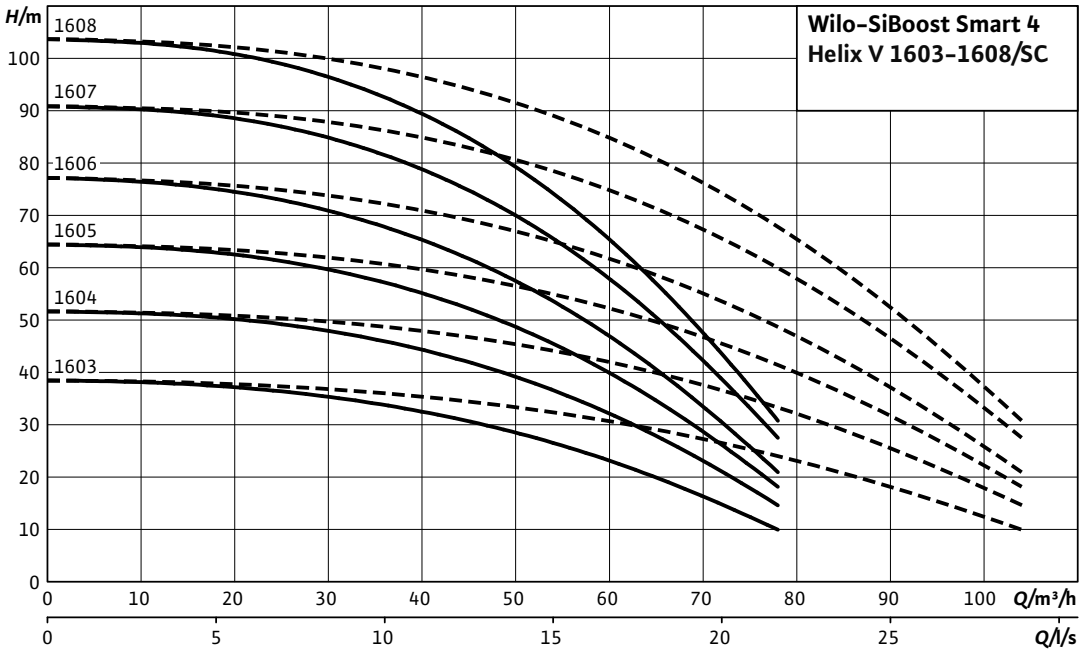

---- including standby pump

Motor data per pump

Wilo-SiBoost Smart 4...	Nominal motor power	Nominal current 3~400 V, 50 Hz	Motor efficiency		
	P_2	I_N	$\eta_{m\ 50\%}$	$\eta_{m\ 75\%}$	$\eta_{m\ 100\%}$
	kW	A	%		
Helix V 1603	2.2	4.6	82.0	83.2	83.2
Helix V 1604	3	6.7	82.5	85.0	84.6
Helix V 1605	4	7.8	85.0	85.8	85.8
Helix V 1606	4	7.8	85.0	85.8	85.8
Helix V 1607	5.5	10.7	85.2	86.9	88.1
Helix V 1608	5.5	10.7	85.2	86.9	88.1

Motor efficiency based on 400 V, 50 Hz

Technical data Wilo-SiBoost Smart (FC) Helix V

Dimension drawing

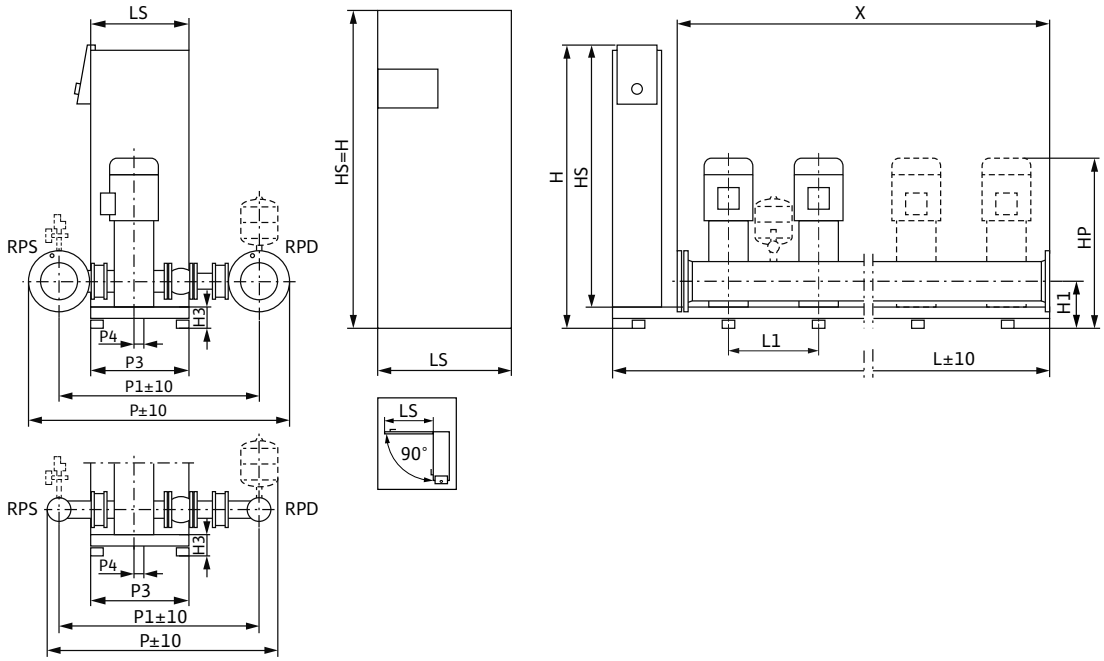

Sample systems are shown.
Accessories (to be ordered separately): Optional WMS low-water cut-out switchgear kit; diaphragm pressure vessel (8 l, PN16)
Installation surface: flat and horizontal
Installation location: dry, well ventilated and frost-proof
To facilitate maintenance, a service area of 1m around the installation is recommended.

Dimensions, weights

Wilo-SiBoost Smart 4...	Nominal diameters of the pipe connections on suction side	Nominal diameters of pipe connections on the pressure side	Dimensions													Weight approx.
	RPS	*RPD*	*H*	*H1*	*H3*	*HP*	*HS*	*L*	*L1*	*LS*	*P*	*P1*	*P3*	*P4*	*X*	*m*
			mm													kg
Helix V 1603	DN 100	DN 100	1055	180	90	869	950	1450	300	400	986	766	420	30	1200	326
Helix V 1604	DN 100	DN 100	1055	180	90	954	950	1450	300	400	986	766	420	30	1200	346
Helix V 1605	DN 100	DN 100	1055	180	90	1050	950	1450	300	400	986	766	420	30	1200	391
Helix V 1606	DN 100	DN 100	1055	180	90	1100	950	1450	300	400	986	766	420	30	1200	395
Helix V 1607	DN 100	DN 100	1405	180	90	1140	1300	1550	300	400	986	766	420	30	1200	506
Helix V 1608	DN 100	DN 100	1405	180	90	1190	1300	1550	300	400	986	766	420	30	1200	514

Technical data Wilo-SiBoost Smart (FC) Helix V

Pump curves

Wilo-SiBoost Smart 2 Helix V 403-418

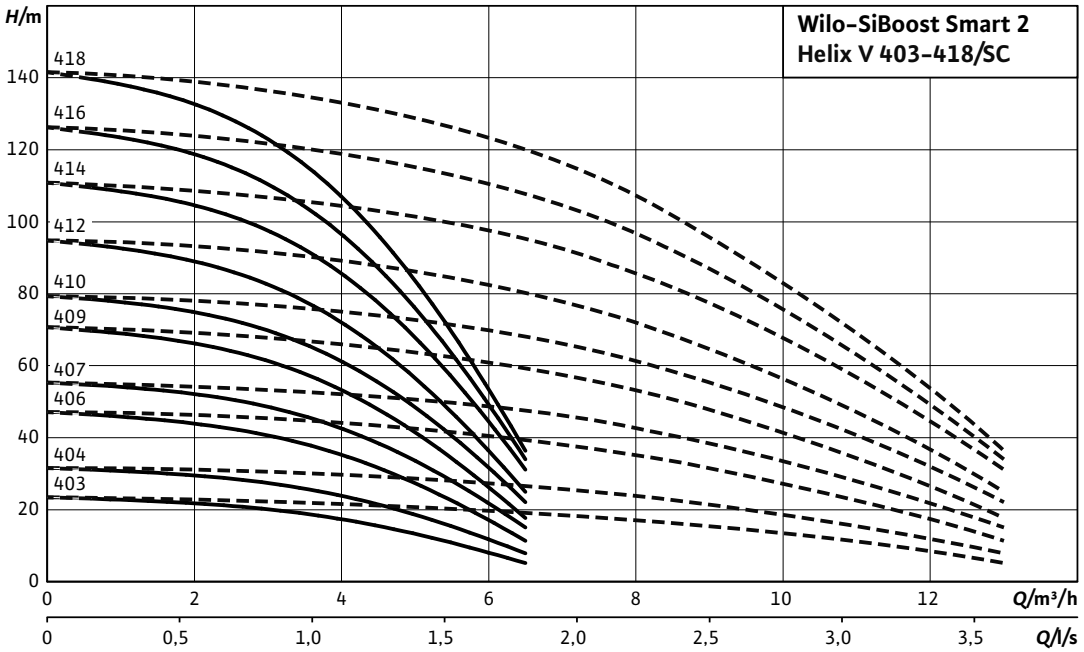

---- including standby pump

Motor data per pump

Wilo-SiBoost Smart FC 2...	Nominal motor power	Nominal current 3~400 V, 50 Hz	Motor efficiency		
	P_2	I_N	$\eta_{m\ 50\%}$	$\eta_{m\ 75\%}$	$\eta_{m\ 100\%}$
	kW	A	%		
Helix V 403	0.37	0.97	71.0	72.8	72.8
Helix V 404	0.55	1.31	73.0	75.0	75.5
Helix V 406	0.75	1.77	76.0	77.4	77.4
Helix V 407	1.1	2.6	78.0	79.6	79.6
Helix V 409	1.1	2.6	78.0	79.6	79.6
Helix V 410	1.5	3.3	80.0	81.3	81.3
Helix V 412	1.5	3.3	80.0	81.3	81.3
Helix V 414	2.2	4.6	82.0	83.2	83.2
Helix V 416	2.2	4.6	82.0	83.2	83.2
Helix V 418	2.2	4.6	82.0	83.2	83.2

Motor efficiency based on 400 V, 50 Hz

Technical data Wilo-SiBoost Smart (FC) Helix V

Dimension drawing

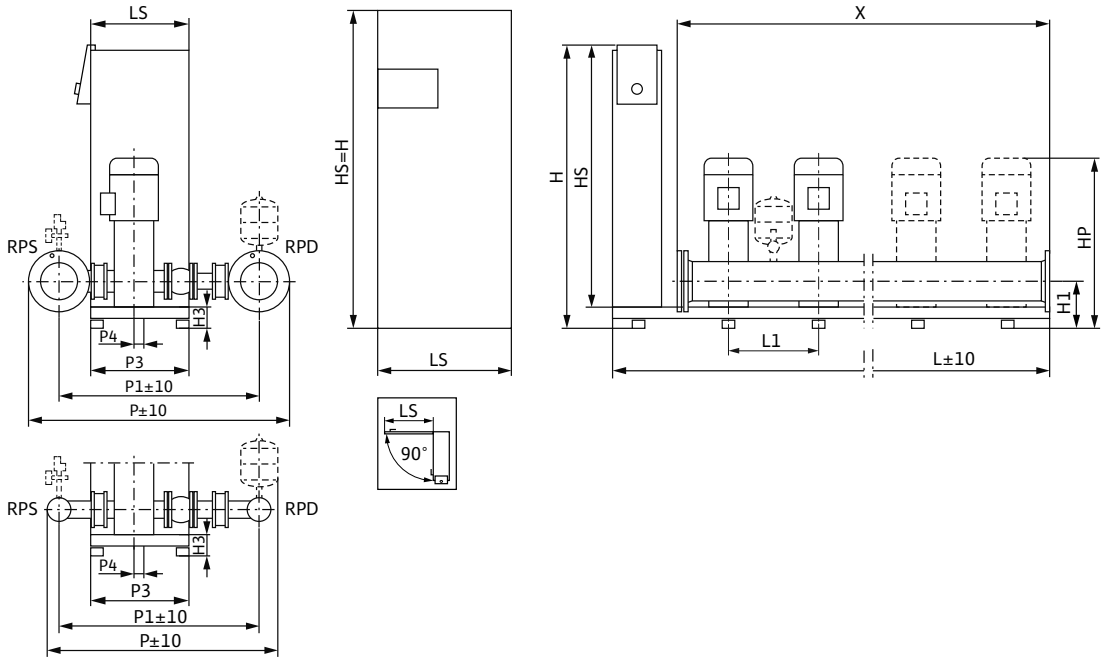

Sample systems are shown.
Accessories (to be ordered separately): Optional WMS low-water cut-out switchgear kit; diaphragm pressure vessel (8 l, PN16)
Installation surface: flat and horizontal
Installation location: dry, well ventilated and frost-proof
To facilitate maintenance, a service area of 1m around the installation is recommended.

Dimensions, weights

Wilo-SiBoost Smart FC 2...	Nominal diameters of the pipe connections on suction side	Nominal diameters of pipe connections on the pressure side	Dimensions													Weight approx.
	RPS	*RPD*	*H*	*H1*	*H3*	*HP*	*HS*	*L*	*L1*	*LS*	*P*	*P1*	*P3*	*P4*	*X*	*m*
			mm													kg
Helix V 403	R 1½	R ½	1405	140	90	710	1300	950	300	400	694	561	420	30	600	156
Helix V 404	R 1½	R ½	1405	140	90	735	1300	950	300	400	694	561	420	30	600	158
Helix V 406	R 1½	R ½	1405	140	90	805	1300	950	300	400	694	561	420	30	600	164
Helix V 407	R 1½	R ½	1405	140	90	830	1300	950	300	400	694	561	420	30	600	169
Helix V 409	R 1½	R ½	1405	140	90	880	1300	950	300	400	694	561	420	30	600	171
Helix V 410	R 1½	R ½	1405	140	90	937	1300	950	300	400	694	561	420	30	600	182
Helix V 412	R 1½	R ½	1405	140	90	987	1300	950	300	400	694	561	420	30	600	184
Helix V 414	R 1½	R ½	1405	140	90	1037	1300	950	300	400	694	561	420	30	600	192
Helix V 416	R 1½	R ½	1405	140	90	1087	1300	950	300	400	694	561	420	30	600	194
Helix V 418	R 1½	R ½	1405	140	90	1137	1300	950	300	400	694	561	420	30	600	196

Technical data Wilo-SiBoost Smart (FC) Helix V

Pump curves

Wilo-SiBoost Smart 3 Helix V 403-418

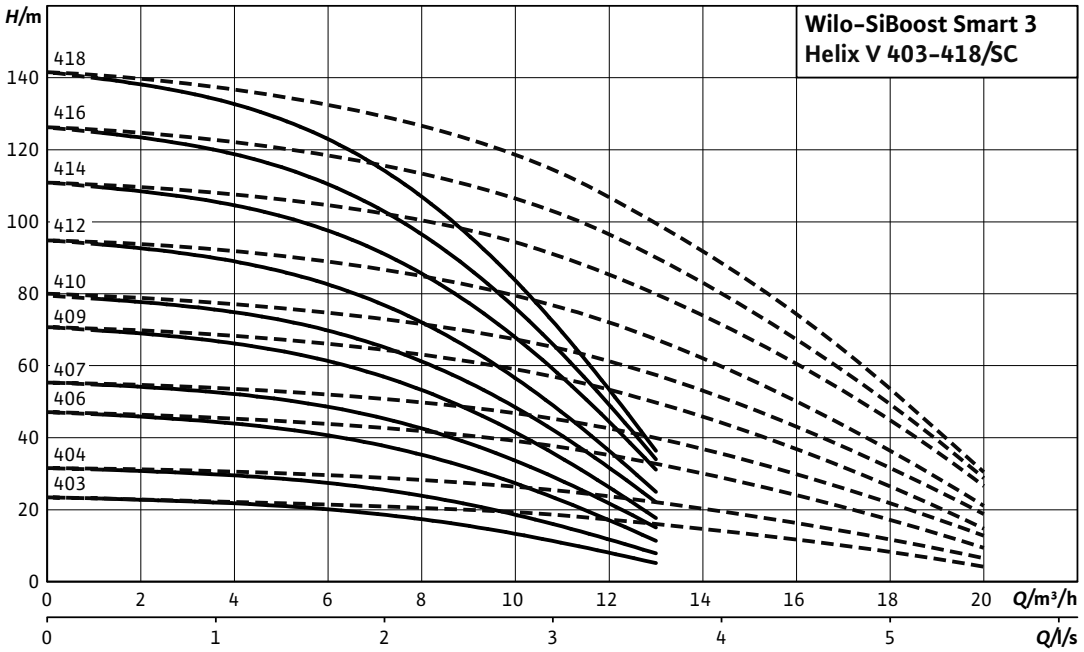

---- including standby pump

Motor data per pump

Wilo-SiBoost Smart FC 3...	Nominal motor power	Nominal current 3~400 V, 50 Hz	Motor efficiency		
	P_2	I_N	$\eta_{m\ 50\%}$	$\eta_{m\ 75\%}$	$\eta_{m\ 100\%}$
	kW	A	%		
Helix V 403	0.37	0.97	71.0	72.8	72.8
Helix V 404	0.55	1.31	73.0	75.0	75.5
Helix V 406	0.75	1.77	76.0	77.4	77.4
Helix V 407	1.1	2.6	78.0	79.6	79.6
Helix V 409	1.1	2.6	78.0	79.6	79.6
Helix V 410	1.5	3.3	80.0	81.3	81.3
Helix V 412	1.5	3.3	80.0	81.3	81.3
Helix V 414	2.2	4.6	82.0	83.2	83.2
Helix V 416	2.2	4.6	82.0	83.2	83.2
Helix V 418	2.2	4.6	82.0	83.2	83.2

Motor efficiency based on 400 V, 50 Hz

Technical data Wilo-SiBoost Smart (FC) Helix V

Dimension drawing

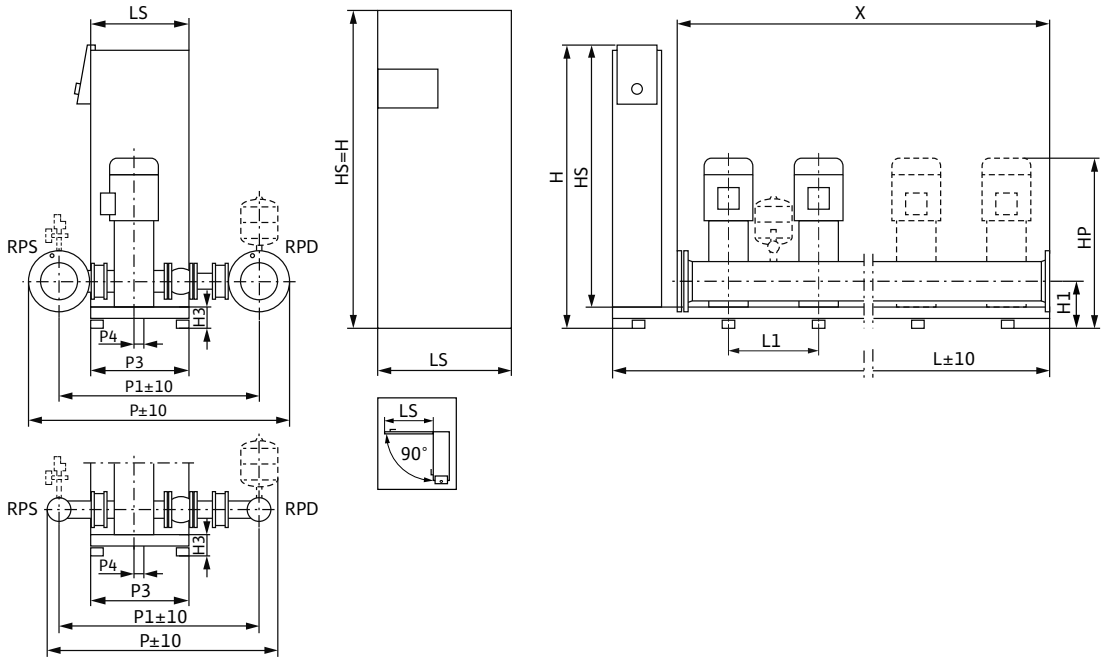

Sample systems are shown.
Accessories (to be ordered separately): Optional WMS low-water cut-out switchgear kit; diaphragm pressure vessel (8 l, PN16)
Installation surface: flat and horizontal
Installation location: dry, well ventilated and frost-proof
To facilitate maintenance, a service area of 1m around the installation is recommended.

Dimensions, weights

Wilo-SiBoost Smart FC 3...	Nominal diameters of the pipe connections on suction side	Nominal diameters of pipe connections on the pressure side	Dimensions													Weight approx.
	RPS	*RPD*	*H*	*H1*	*H3*	*HP*	*HS*	*L*	*L1*	*LS*	*P*	*P1*	*P3*	*P4*	*X*	*m*
			mm													kg
Helix V 403	R 1½	R ½	1405	140	90	710	1300	1250	300	400	694	561	420	30	900	195
Helix V 404	R 1½	R ½	1405	140	90	735	1300	1250	300	400	694	561	420	30	900	198
Helix V 406	R 1½	R ½	1405	140	90	805	1300	1250	300	400	694	561	420	30	900	207
Helix V 407	R 1½	R ½	1405	140	90	830	1300	1250	300	400	694	561	420	30	900	214
Helix V 409	R 1½	R ½	1405	140	90	880	1300	1250	300	400	694	561	420	30	900	217
Helix V 410	R 1½	R ½	1405	140	90	937	1300	1250	300	400	694	561	420	30	900	233
Helix V 412	R 1½	R ½	1405	140	90	987	1300	1250	300	400	694	561	420	30	900	236
Helix V 414	R 1½	R ½	1405	140	90	1037	1300	1250	300	400	694	561	420	30	900	248
Helix V 416	R 1½	R ½	1405	140	90	1087	1300	1250	300	400	694	561	420	30	900	251
Helix V 418	R 1½	R ½	1405	140	90	1137	1300	1250	300	400	694	561	420	30	900	254

Technical data Wilo-SiBoost Smart (FC) Helix V

Pump curves

Wilo-SiBoost Smart 4 Helix V 403-418

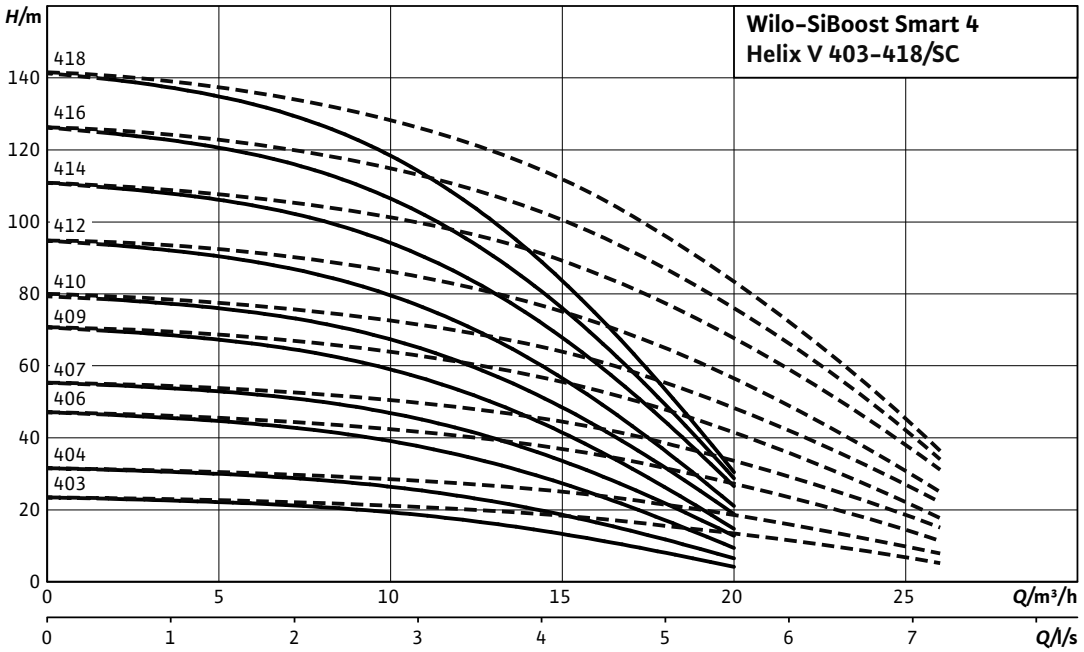

---- including standby pump

Motor data per pump

Wilo-SiBoost Smart FC 4...	Nominal motor power	Nominal current 3~400 V, 50 Hz	Motor efficiency		
	P_2	I_N	$\eta_{m\ 50\%}$	$\eta_{m\ 75\%}$	$\eta_{m\ 100\%}$
	kW	A	%		
Helix V 403	0.37	0.97	71.0	72.8	72.8
Helix V 404	0.55	1.31	73.0	75.0	75.5
Helix V 406	0.75	1.77	76.0	77.4	77.4
Helix V 407	1.1	2.6	78.0	79.6	79.6
Helix V 409	1.1	2.6	78.0	79.6	79.6
Helix V 410	1.5	3.3	80.0	81.3	81.3
Helix V 412	1.5	3.3	80.0	81.3	81.3
Helix V 414	2.2	4.6	82.0	83.2	83.2
Helix V 416	2.2	4.6	82.0	83.2	83.2
Helix V 418	2.2	4.6	82.0	83.2	83.2

Motor efficiency based on 400 V, 50 Hz

Technical data Wilo-SiBoost Smart (FC) Helix V

Dimension drawing

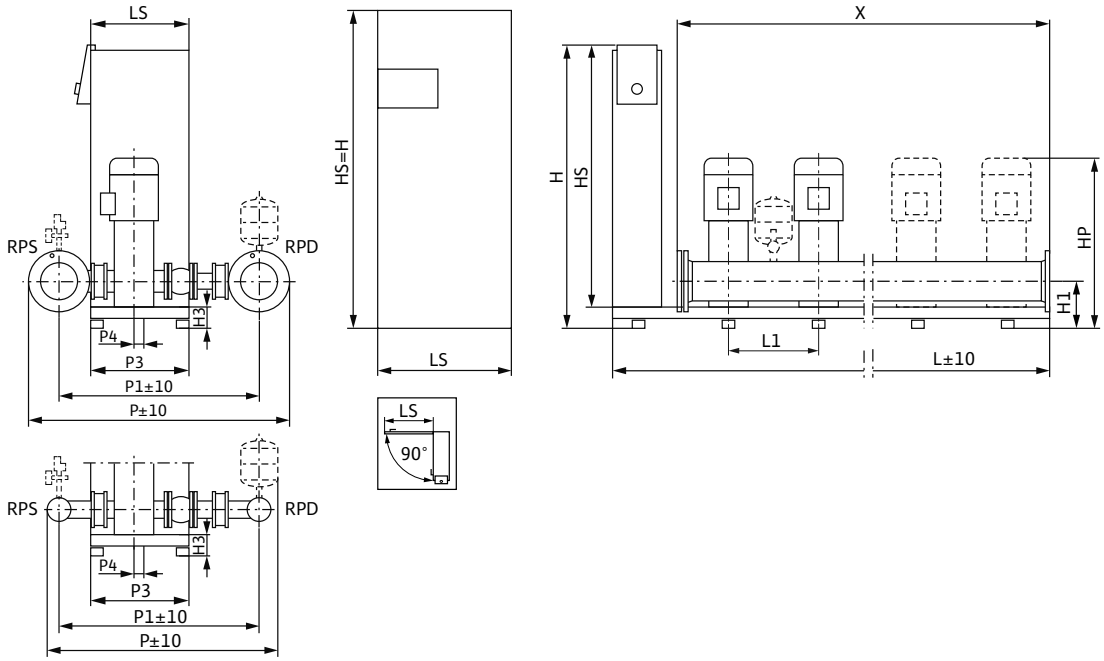

Sample systems are shown.
Accessories (to be ordered separately): Optional WMS low-water cut-out switchgear kit; diaphragm pressure vessel (8 l, PN16)
Installation surface: flat and horizontal
Installation location: dry, well ventilated and frost-proof
To facilitate maintenance, a service area of 1m around the installation is recommended.

Dimensions, weights

Wilo-SiBoost Smart FC 4...	Nominal diameters of the pipe connections on suction side	Nominal diameters of pipe connections on the pressure side	Dimensions													Weight approx.
	RPS	*RPD*	*H*	*H1*	*H3*	*HP*	*HS*	*L*	*L1*	*LS*	*P*	*P1*	*P3*	*P4*	*X*	*m*
			mm													kg
Helix V 403	R 2	R 2	1405	140	90	710	1300	1550	300	400	706	573	420	30	1200	233
Helix V 404	R 2	R 2	1405	140	90	735	1300	1550	300	400	706	573	420	30	1200	237
Helix V 406	R 2	R 2	1405	140	90	805	1300	1550	300	400	706	573	420	30	1200	249
Helix V 407	R 2	R 2	1405	140	90	830	1300	1550	300	400	706	573	420	30	1200	258
Helix V 409	R 2	R 2	1405	140	90	880	1300	1550	300	400	706	573	420	30	1200	262
Helix V 410	R 2	R 2	1405	140	90	937	1300	1550	300	400	706	573	420	30	1200	282
Helix V 412	R 2	R 2	1405	140	90	987	1300	1550	300	400	706	573	420	30	1200	286
Helix V 414	R 2	R 2	1405	140	90	1037	1300	1550	300	400	706	573	420	30	1200	303
Helix V 416	R 2	R 2	1405	140	90	1087	1300	1550	300	400	706	573	420	30	1200	307
Helix V 418	R 2	R 2	1405	140	90	1137	1300	1550	300	400	706	573	420	30	1200	311

Technical data Wilo-SiBoost Smart (FC) Helix V

Pump curves

Wilo-SiBoost Smart 2 Helix V 603-616

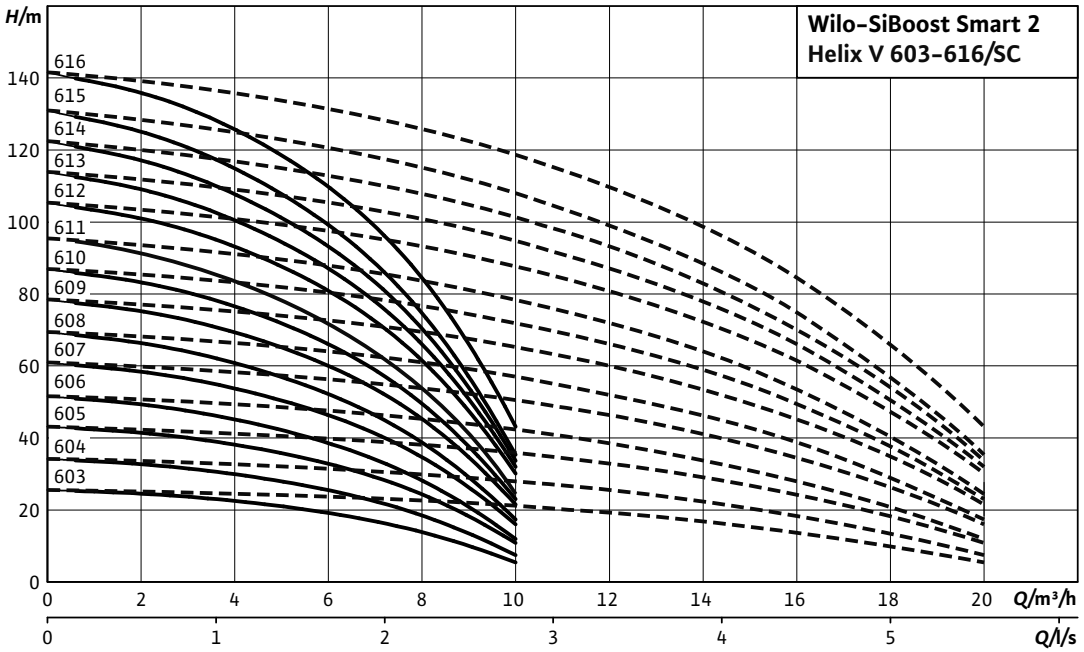

---- including standby pump

Motor data per pump

Wilo-SiBoost Smart FC 2...	Nominal motor power	Nominal current 3~400 V, 50 Hz	Motor efficiency		
	P_2	I_N	$\eta_{m\ 50\%}$	$\eta_{m\ 75\%}$	$\eta_{m\ 100\%}$
	kW	A	%		
Helix V 603	0.55	1.31	73.0	75.0	75.5
Helix V 604	0.75	1.77	76.0	77.4	77.4
Helix V 605	1.1	2.6	78.0	79.6	79.6
Helix V 606	1.1	2.6	78.0	79.6	79.6
Helix V 607	1.5	3.3	80.0	81.3	81.3
Helix V 608	1.5	3.3	80.0	81.3	81.3
Helix V 609	2.2	4.6	82.0	83.2	83.2
Helix V 610	2.2	4.6	82.0	83.2	83.2
Helix V 611	2.2	4.6	82.0	83.2	83.2
Helix V 612	3	6.7	82.5	85.0	84.6
Helix V 613	3	6.7	82.5	85.0	84.6
Helix V 614	3	6.7	82.5	85.0	84.6
Helix V 615	3	6.7	82.5	85.0	84.6
Helix V 616	4	7.8	85.0	85.8	85.8

Motor efficiency based on 400 V, 50 Hz

Technical data Wilo-SiBoost Smart (FC) Helix V

Dimension drawing

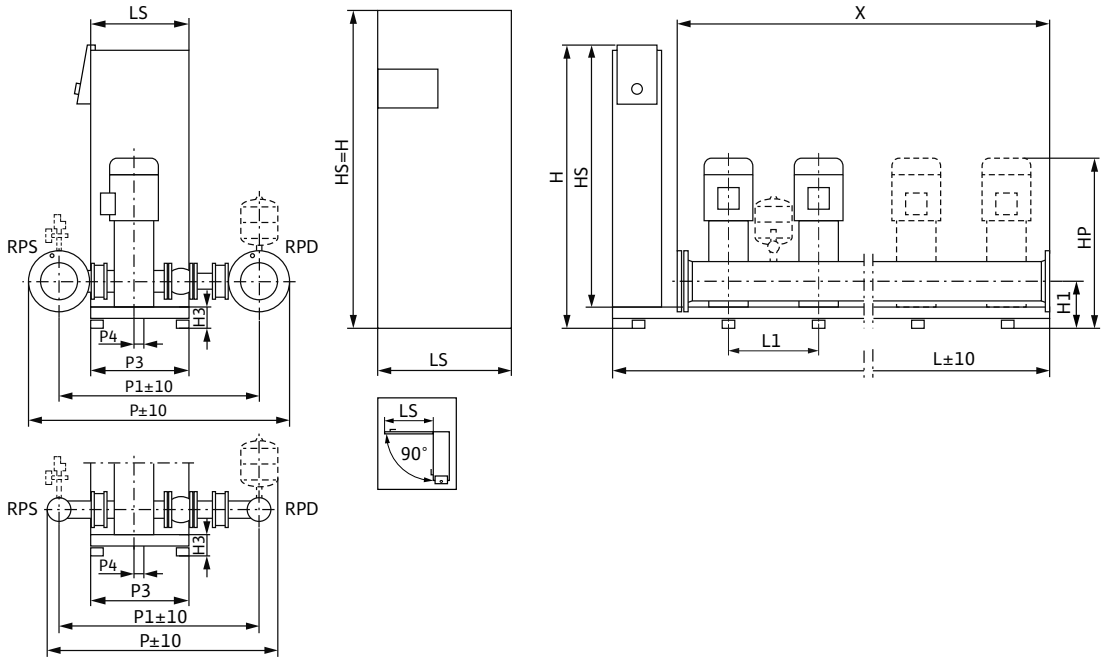

Sample systems are shown.
Accessories (to be ordered separately): Optional WMS low-water cut-out switchgear kit; diaphragm pressure vessel (8 l, PN16)
Installation surface: flat and horizontal
Installation location: dry, well ventilated and frost-proof
To facilitate maintenance, a service area of 1m around the installation is recommended.

Dimensions, weights

Wilo-SiBoost Smart FC 2...	Nominal diameters of the pipe connections on suction side	Nominal diameters of pipe connections on the pressure side	Dimensions													Weight approx.
	RPS	*RPD*	*H*	*H1*	*H3*	*HP*	*HS*	*L*	*L1*	*LS*	*P*	*P1*	*P3*	*P4*	*X*	*m*
			mm													kg
Helix V 603	R 2	R 2	1405	140	90	748	1300	950	300	400	706	573	420	30	600	161
Helix V 604	R 2	R 2	1405	140	90	805	1300	950	300	400	706	573	420	30	600	167
Helix V 605	R 2	R 2	1405	140	90	843	1300	950	300	400	706	573	420	30	600	172
Helix V 606	R 2	R 2	1405	140	90	880	1300	950	300	400	706	573	420	30	600	174
Helix V 607	R 2	R 2	1405	140	90	950	1300	950	300	400	706	573	420	30	600	185
Helix V 608	R 2	R 2	1405	140	90	988	1300	950	300	400	706	573	420	30	600	187
Helix V 609	R 2	R 2	1405	140	90	1025	1300	950	300	400	706	573	420	30	600	193
Helix V 610	R 2	R 2	1405	140	90	1063	1300	950	300	400	706	573	420	30	600	195
Helix V 611	R 2	R 2	1405	140	90	1138	1300	950	300	400	706	573	420	30	600	197
Helix V 612	R 2	R 2	1405	140	90	1173	1300	950	300	400	706	573	420	30	600	205
Helix V 613	R 2	R 2	1405	140	90	1248	1300	950	300	400	706	573	420	30	600	207
Helix V 614	R 2	R 2	1405	140	90	1248	1300	950	300	400	706	573	420	30	600	209
Helix V 615	R 2	R 2	1405	140	90	1323	1300	950	300	400	706	573	420	30	600	211
Helix V 616	R 2	R 2	1405	140	90	1367	1300	950	300	400	706	573	420	30	600	234

Technical data Wilo-SiBoost Smart (FC) Helix V

Pump curves

Wilo-SiBoost Smart 3 Helix V 603-616

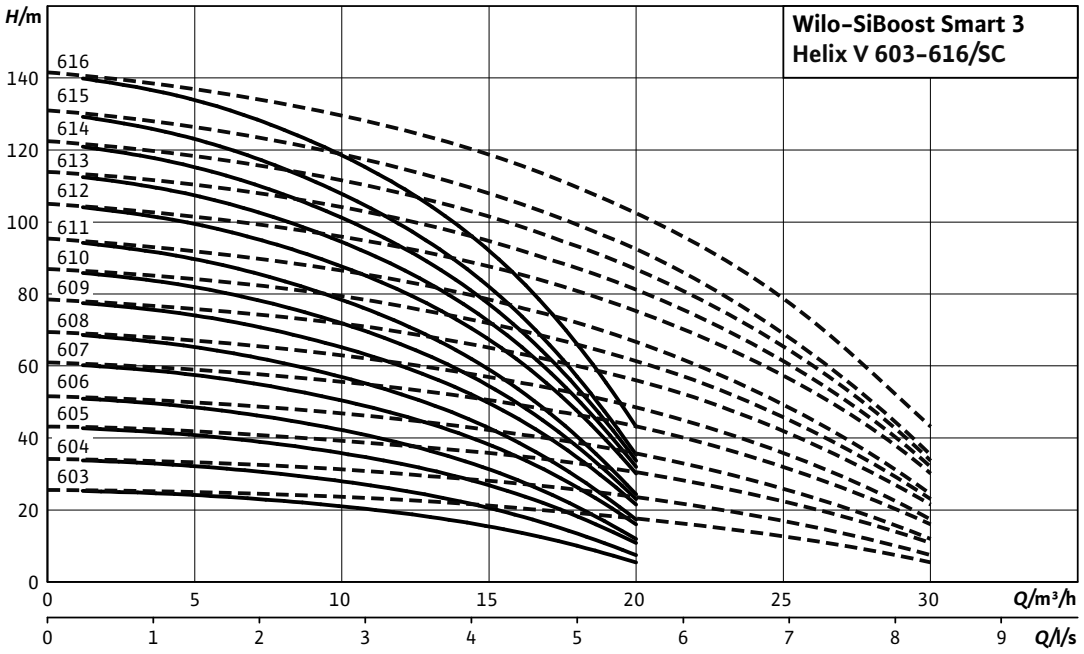

---- including standby pump

Motor data per pump					
Wilo-SiBoost Smart FC 3...	**Nominal motor power**	**Nominal current 3~400 V, 50 Hz**	**Motor efficiency**		
	P_2	I_N	$\eta_{m\ 50\%}$	$\eta_{m\ 75\%}$	$\eta_{m\ 100\%}$
	kW	A	%		
Helix V 603	0.55	1.31	73.0	75.0	75.5
Helix V 604	0.75	1.77	76.0	77.4	77.4
Helix V 605	1.1	2.6	78.0	79.6	79.6
Helix V 606	1.1	2.6	78.0	79.6	79.6
Helix V 607	1.5	3.3	80.0	81.3	81.3
Helix V 608	1.5	3.3	80.0	81.3	81.3
Helix V 609	2.2	4.6	82.0	83.2	83.2
Helix V 610	2.2	4.6	82.0	83.2	83.2
Helix V 611	2.2	4.6	82.0	83.2	83.2
Helix V 612	3	6.7	82.5	85.0	84.6
Helix V 613	3	6.7	82.5	85.0	84.6
Helix V 614	3	6.7	82.5	85.0	84.6
Helix V 615	3	6.7	82.5	85.0	84.6
Helix V 616	4	7.8	85.0	85.8	85.8

Motor efficiency based on 400 V, 50 Hz

Technical data Wilo-SiBoost Smart (FC) Helix V

Dimension drawing

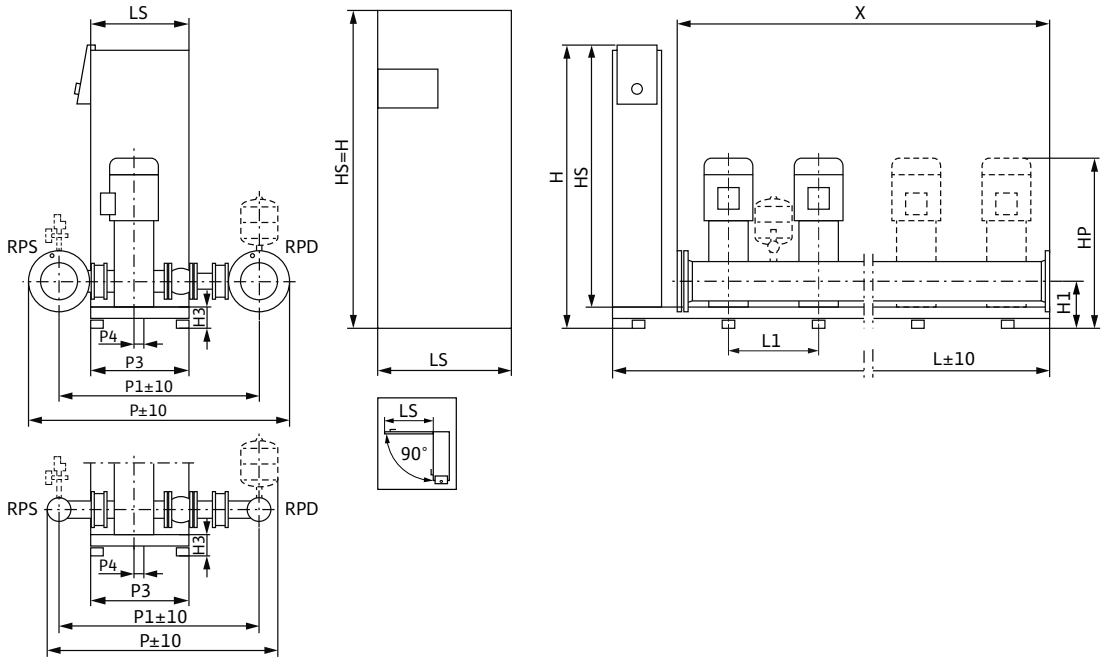

Sample systems are shown.
Accessories (to be ordered separately): Optional WMS low-water cut-out switchgear kit; diaphragm pressure vessel (8 l, PN16)
Installation surface: flat and horizontal
Installation location: dry, well ventilated and frost-proof
To facilitate maintenance, a service area of 1m around the installation is recommended.

Dimensions, weights

Wilo-SiBoost Smart FC 3...	Nominal diameters of the pipe connections on suction side	Nominal diameters of pipe connections on the pressure side	Dimensions													Weight approx.
	RPS	*RPD*	*H*	*H1*	*H3*	*HP*	*HS*	*L*	*L1*	*LS*	*P*	*P1*	*P3*	*P4*	*X*	*m*
			mm													kg
Helix V 603	R 2½	R 2½	1405	140	90	748	1300	1250	300	400	722	589	420	30	900	203
Helix V 604	R 2½	R 2½	1405	140	90	805	1300	1250	300	400	722	589	420	30	900	212
Helix V 605	R 2½	R 2½	1405	140	90	843	1300	1250	300	400	722	589	420	30	900	219
Helix V 606	R 2½	R 2½	1405	140	90	880	1300	1250	300	400	722	589	420	30	900	222
Helix V 607	R 2½	R 2½	1405	140	90	950	1300	1250	300	400	722	589	420	30	900	238
Helix V 608	R 2½	R 2½	1405	140	90	988	1300	1250	300	400	722	589	420	30	900	241
Helix V 609	R 2½	R 2½	1405	140	90	1025	1300	1250	300	400	722	589	420	30	900	250
Helix V 610	R 2½	R 2½	1405	140	90	1063	1300	1250	300	400	722	589	420	30	900	253
Helix V 611	R 2½	R 2½	1405	140	90	1138	1300	1250	300	400	722	589	420	30	900	256
Helix V 612	R 2½	R 2½	1405	140	90	1173	1300	1250	300	400	722	589	420	30	900	268
Helix V 613	R 2½	R 2½	1405	140	90	1248	1300	1250	300	400	722	589	420	30	900	271
Helix V 614	R 2½	R 2½	1405	140	90	1248	1300	1250	300	400	722	589	420	30	900	274
Helix V 615	R 2½	R 2½	1405	140	90	1323	1300	1250	300	400	722	589	420	30	900	277
Helix V 616	R 2½	R 2½	1405	140	90	1367	1300	1250	300	400	722	589	420	30	900	311

Technical data Wilo-SiBoost Smart (FC) Helix V

Pump curves

Wilo-SiBoost Smart 4 Helix V 603-616

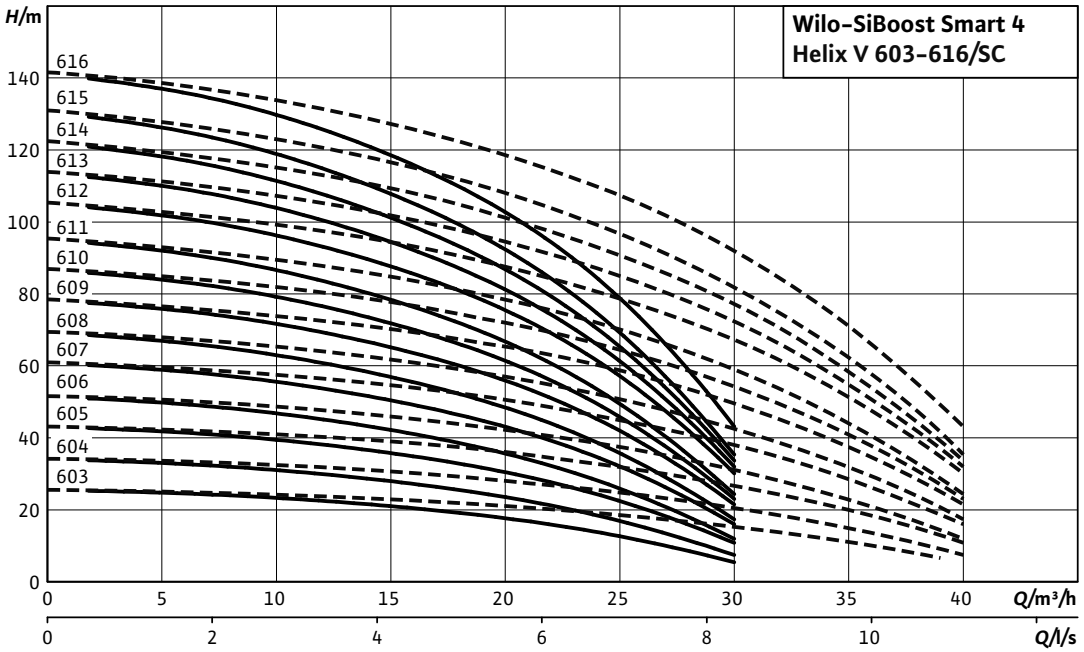

---- including standby pump

Motor data per pump

Wilo-SiBoost Smart FC 4...	Nominal motor power	Nominal current 3~400 V, 50 Hz	Motor efficiency		
	P_2	I_N	$\eta_{m\ 50\%}$	$\eta_{m\ 75\%}$	$\eta_{m\ 100\%}$
	kW	A	%		
Helix V 603	0.55	1.31	73.0	75.0	75.5
Helix V 604	0.75	1.77	76.0	77.4	77.4
Helix V 605	1.1	2.6	78.0	79.6	79.6
Helix V 606	1.1	2.6	78.0	79.6	79.6
Helix V 607	1.5	3.3	80.0	81.3	81.3
Helix V 608	1.5	3.3	80.0	81.3	81.3
Helix V 609	2.2	4.6	82.0	83.2	83.2
Helix V 610	2.2	4.6	82.0	83.2	83.2
Helix V 611	2.2	4.6	82.0	83.2	83.2
Helix V 612	3	6.7	82.5	85.0	84.6
Helix V 613	3	6.7	82.5	85.0	84.6
Helix V 614	3	6.7	82.5	85.0	84.6
Helix V 615	3	6.7	82.5	85.0	84.6
Helix V 616	4	7.8	85.0	85.8	85.8

Motor efficiency based on 400 V, 50 Hz

Technical data Wilo-SiBoost Smart (FC) Helix V

Dimension drawing

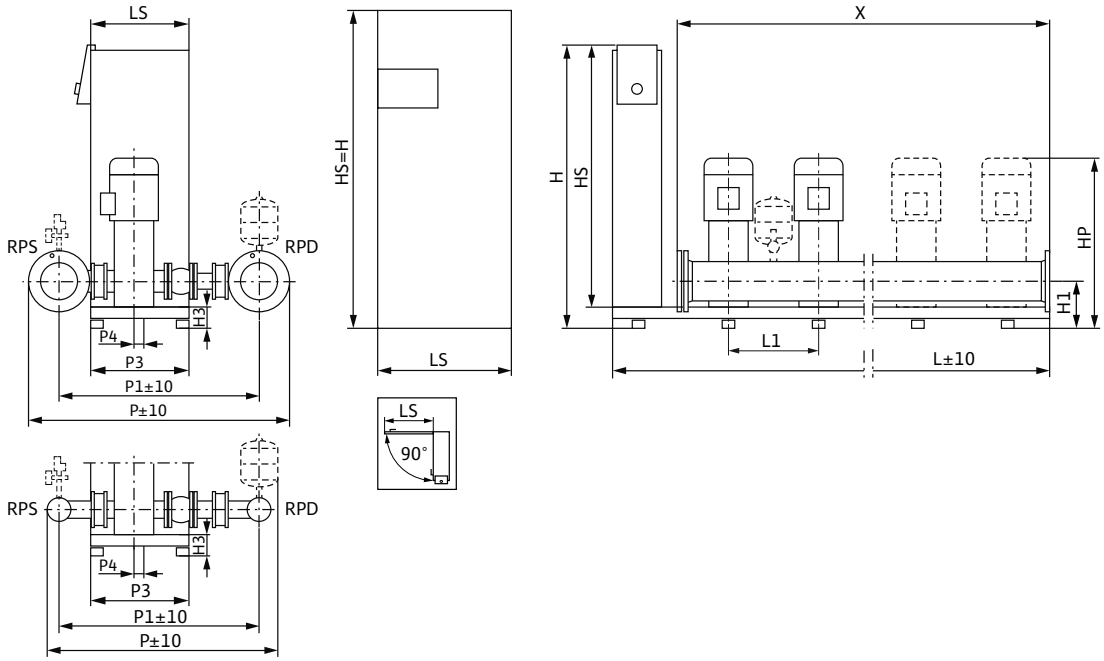

Sample systems are shown.
Accessories (to be ordered separately): Optional WMS low-water cut-out switchgear kit; diaphragm pressure vessel (8 l, PN16)
Installation surface: flat and horizontal
Installation location: dry, well ventilated and frost-proof
To facilitate maintenance, a service area of 1m around the installation is recommended.

Dimensions, weights

Wilo-SiBoost Smart FC 4...	Nominal diameters of the pipe connections on suction side	Nominal diameters of pipe connections on the pressure side	Dimensions													Weight approx.
	RPS	*RPD*	*H*	*H1*	*H3*	*HP*	*HS*	*L*	*L1*	*LS*	*P*	*P1*	*P3*	*P4*	*X*	*m*
			mm													kg
Helix V 603	R 2½	R 2½	1405	140	90	748	1300	1550	300	400	722	589	420	30	1200	243
Helix V 604	R 2½	R 2½	1405	140	90	805	1300	1550	300	400	722	589	420	30	1200	255
Helix V 605	R 2½	R 2½	1405	140	90	843	1300	1550	300	400	722	589	420	30	1200	264
Helix V 606	R 2½	R 2½	1405	140	90	880	1300	1550	300	400	722	589	420	30	1200	268
Helix V 607	R 2½	R 2½	1405	140	90	950	1300	1550	300	400	722	589	420	30	1200	288
Helix V 608	R 2½	R 2½	1405	140	90	988	1300	1550	300	400	722	589	420	30	1200	292
Helix V 609	R 2½	R 2½	1405	140	90	1025	1300	1550	300	400	722	589	420	30	1200	305
Helix V 610	R 2½	R 2½	1405	140	90	1063	1300	1550	300	400	722	589	420	30	1200	309
Helix V 611	R 2½	R 2½	1405	140	90	1138	1300	1550	300	400	722	589	420	30	1200	313
Helix V 612	R 2½	R 2½	1405	140	90	1173	1300	1550	300	400	722	589	420	30	1200	329
Helix V 613	R 2½	R 2½	1405	140	90	1248	1300	1550	300	400	722	589	420	30	1200	333
Helix V 614	R 2½	R 2½	1405	140	90	1248	1300	1550	300	400	722	589	420	30	1200	337
Helix V 615	R 2½	R 2½	1405	140	90	1323	1300	1550	300	400	722	589	420	30	1200	341
Helix V 616	R 2½	R 2½	1405	140	90	1367	1300	1550	300	400	722	589	420	30	1200	386

Technical data Wilo-SiBoost Smart (FC) Helix V

Pump curves

Wilo-SiBoost Smart 2 Helix V 1002-1015

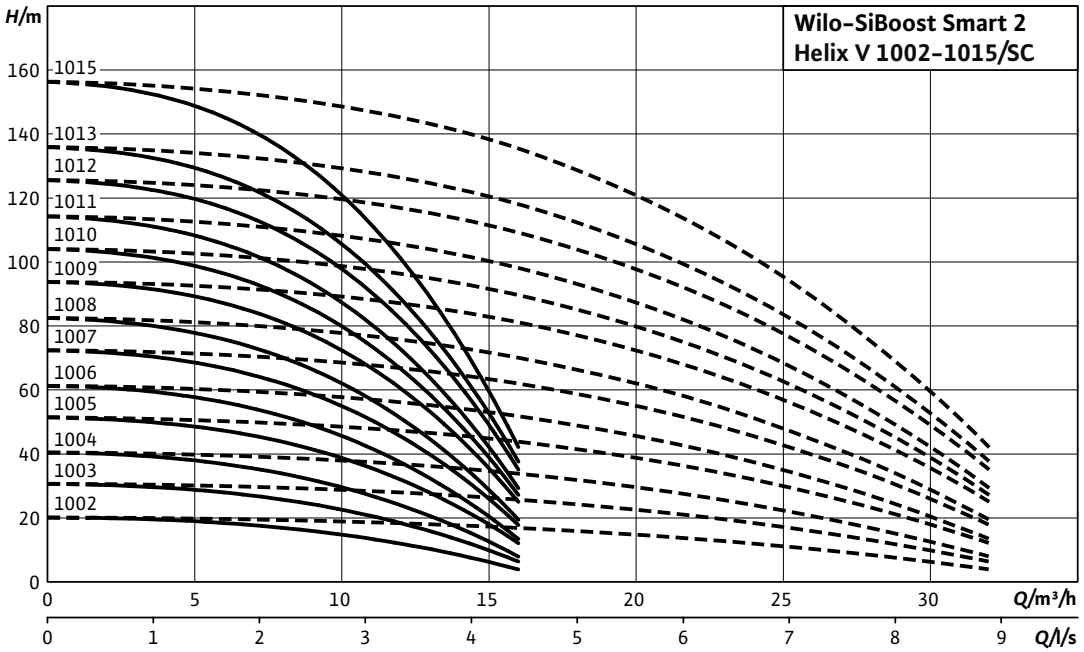

---- including standby pump

Motor data per pump					
Wilo-SiBoost Smart FC 2...	**Nominal motor power**	**Nominal current 3~400 V, 50 Hz**	**Motor efficiency**		
	P_2	I_N	$\eta_{m\ 50\%}$	$\eta_{m\ 75\%}$	$\eta_{m\ 100\%}$
	kW	A	%		
Helix V 1002	0.75	1.77	76.0	77.4	77.4
Helix V 1003	1.1	2.6	78.0	79.6	79.6
Helix V 1004	1.5	3.3	80.0	81.3	81.3
Helix V 1005	2.2	4.6	82.0	83.2	83.2
Helix V 1006	2.2	4.6	82.0	83.2	83.2
Helix V 1007	3	6.7	82.5	85.0	84.6
Helix V 1008	3	6.7	82.5	85.0	84.6
Helix V 1009	4	7.8	85.0	85.8	85.8
Helix V 1010	4	7.8	85.0	85.8	85.8
Helix V 1011	4	7.8	85.0	85.8	85.8
Helix V 1012	5.5	10.7	85.2	86.9	88.1
Helix V 1013	5.5	10.7	85.2	86.9	88.1
Helix V 1015	5.5	10.7	85.2	86.9	88.1

Motor efficiency based on 400 V, 50 Hz

Technical data Wilo-SiBoost Smart (FC) Helix V

Dimension drawing

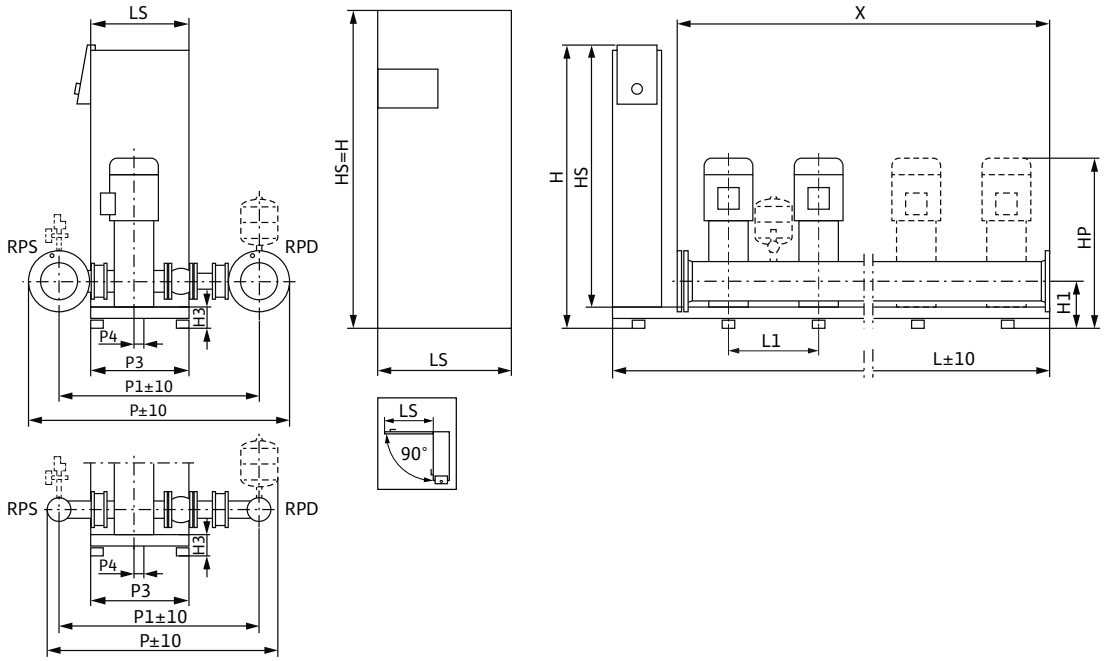

Sample systems are shown.
Accessories (to be ordered separately): Optional WMS low-water cut-out switchgear kit; diaphragm pressure vessel (8 l, PN16)
Installation surface: flat and horizontal
Installation location: dry, well ventilated and frost-proof
To facilitate maintenance, a service area of 1m around the installation is recommended.

Dimensions, weights

Wilo-SiBoost Smart FC 2...	Nominal diameters of the pipe connections on suction side	Nominal diameters of pipe connections on the pressure side	Dimensions													Weight approx.
	RPS	*RPD*	*H*	*H1*	*H3*	*HP*	*HS*	*L*	*L1*	*LS*	*P*	*P1*	*P3*	*P4*	*X*	*m*
			mm													kg
Helix V 1002	R 2½	R 2½	1405	170	90	751	1300	950	300	400	845	704	420	30	600	175
Helix V 1003	R 2½	R 2½	1405	170	90	789	1300	950	300	400	845	704	420	30	600	180
Helix V 1004	R 2½	R 2½	1405	170	90	859	1300	950	300	400	845	704	420	30	600	193
Helix V 1005	R 2½	R 2½	1405	170	90	896	1300	950	300	400	845	704	420	30	600	199
Helix V 1006	R 2½	R 2½	1405	170	90	934	1300	950	300	400	845	704	420	30	600	201
Helix V 1007	R 2½	R 2½	1405	170	90	1007	1300	950	300	400	845	704	420	30	600	209
Helix V 1008	R 2½	R 2½	1405	170	90	1044	1300	950	300	400	845	704	420	30	600	211
Helix V 1009	R 2½	R 2½	1405	170	90	1125	1300	950	300	400	845	704	420	30	600	236
Helix V 1010	R 2½	R 2½	1405	170	90	1163	1300	950	300	400	845	704	420	30	600	328
Helix V 1011	R 2½	R 2½	1405	170	90	1238	1300	950	300	400	845	704	420	30	600	240
Helix V 1012	R 2½	R 2½	1900	185	105	1245	1900	600	300	800	845	704	450	25	600	348
Helix V 1013	R 2½	R 2½	1900	185	105	1320	1900	600	300	800	845	704	450	25	600	350
Helix V 1015	R 2½	R 2½	1900	185	105	1395	1900	600	300	800	845	704	450	25	600	354

Technical data Wilo-SiBoost Smart (FC) Helix V

Pump curves

Wilo-SiBoost Smart 3 Helix V 1002-1015

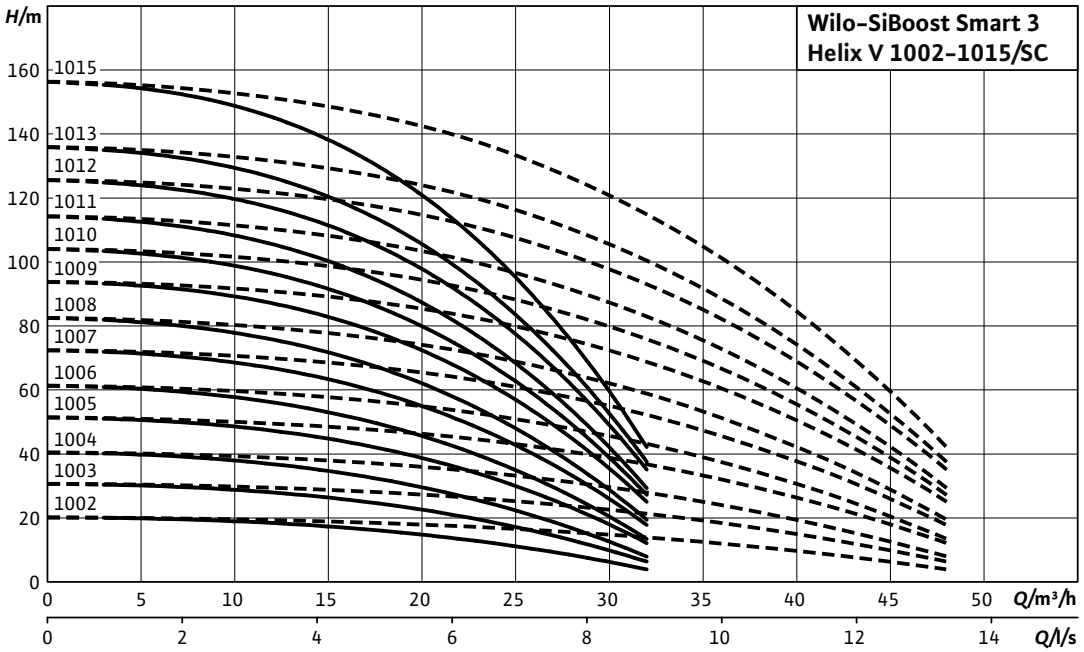

---- including standby pump

Motor data per pump					
Wilo-SiBoost Smart FC 3...	**Nominal motor power**	**Nominal current 3~400 V, 50 Hz**	**Motor efficiency**		
	P_2	I_N	$\eta_{m\ 50\%}$	$\eta_{m\ 75\%}$	$\eta_{m\ 100\%}$
	kW	A	%		
Helix V 1002	0.75	1.77	76.0	77.4	77.4
Helix V 1003	1.1	2.6	78.0	79.6	79.6
Helix V 1004	1.5	3.3	80.0	81.3	81.3
Helix V 1005	2.2	4.6	82.0	83.2	83.2
Helix V 1006	2.2	4.6	82.0	83.2	83.2
Helix V 1007	3	6.7	82.5	85.0	84.6
Helix V 1008	3	6.7	82.5	85.0	84.6
Helix V 1009	4	7.8	85.0	85.8	85.8
Helix V 1010	4	7.8	85.0	85.8	85.8
Helix V 1011	4	7.8	85.0	85.8	85.8
Helix V 1012	5.5	10.7	85.2	86.9	88.1
Helix V 1013	5.5	10.7	85.2	86.9	88.1
Helix V 1015	5.5	10.7	85.2	86.9	88.1

Motor efficiency based on 400 V, 50 Hz

Technical data Wilo-SiBoost Smart (FC) Helix V

Dimension drawing

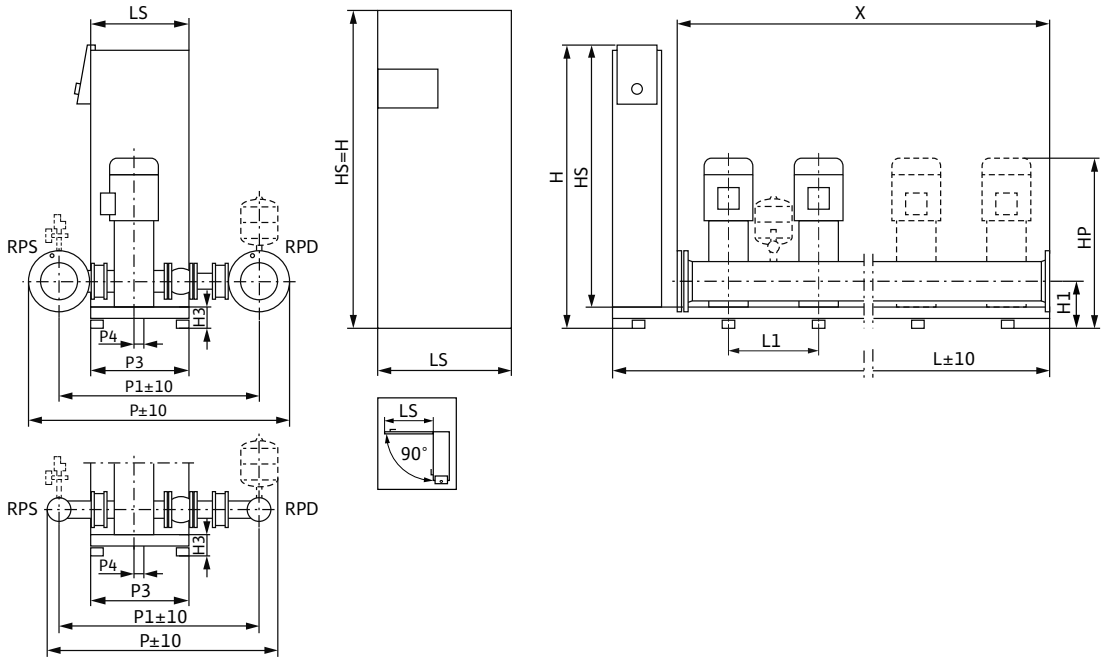

Sample systems are shown.
Accessories (to be ordered separately): Optional WMS low-water cut-out switchgear kit; diaphragm pressure vessel (8 l, PN16)
Installation surface: flat and horizontal
Installation location: dry, well ventilated and frost-proof
To facilitate maintenance, a service area of 1m around the installation is recommended.

Dimensions, weights

Wilo-SiBoost Smart FC 3...	Nominal diameters of the pipe connections on suction side	Nominal diameters of pipe connections on the pressure side	Dimensions													Weight approx.
	RPS	*RPD*	*H*	*H1*	*H3*	*HP*	*HS*	*L*	*L1*	*LS*	*P*	*P1*	*P3*	*P4*	*X*	*m*
			mm													kg
Helix V 1002	R 2½	R 2½	1405	170	90	751	1300	1250	300	400	845	704	420	30	900	223
Helix V 1003	R 2½	R 2½	1405	170	90	789	1300	1250	300	400	845	704	420	30	900	230
Helix V 1004	R 2½	R 2½	1405	170	90	859	1300	1250	300	400	845	704	420	30	900	249
Helix V 1005	R 2½	R 2½	1405	170	90	896	1300	1250	300	400	845	704	420	30	900	258
Helix V 1006	R 2½	R 2½	1405	170	90	934	1300	1250	300	400	845	704	420	30	900	261
Helix V 1007	R 2½	R 2½	1405	170	90	1007	1300	1250	300	400	845	704	420	30	900	273
Helix V 1008	R 2½	R 2½	1405	170	90	1044	1300	1250	300	400	845	704	420	30	900	276
Helix V 1009	R 2½	R 2½	1405	170	90	1125	1300	1250	300	400	845	704	420	30	900	313
Helix V 1010	R 2½	R 2½	1405	170	90	1163	1300	1250	300	400	845	704	420	30	900	316
Helix V 1011	R 2½	R 2½	1405	170	90	1238	1300	1250	300	400	845	704	420	30	900	319
Helix V 1012	R 2½	R 2½	1900	185	105	1245	1900	900	300	800	845	704	450	25	900	433
Helix V 1013	R 2½	R 2½	1900	185	105	1320	1900	900	300	800	845	704	450	25	900	436
Helix V 1015	R 2½	R 2½	1900	185	105	1395	1900	900	300	800	845	704	450	25	900	442

Technical data Wilo-SiBoost Smart (FC) Helix V

Pump curves

Wilo-SiBoost Smart 4 Helix V 1002-1015

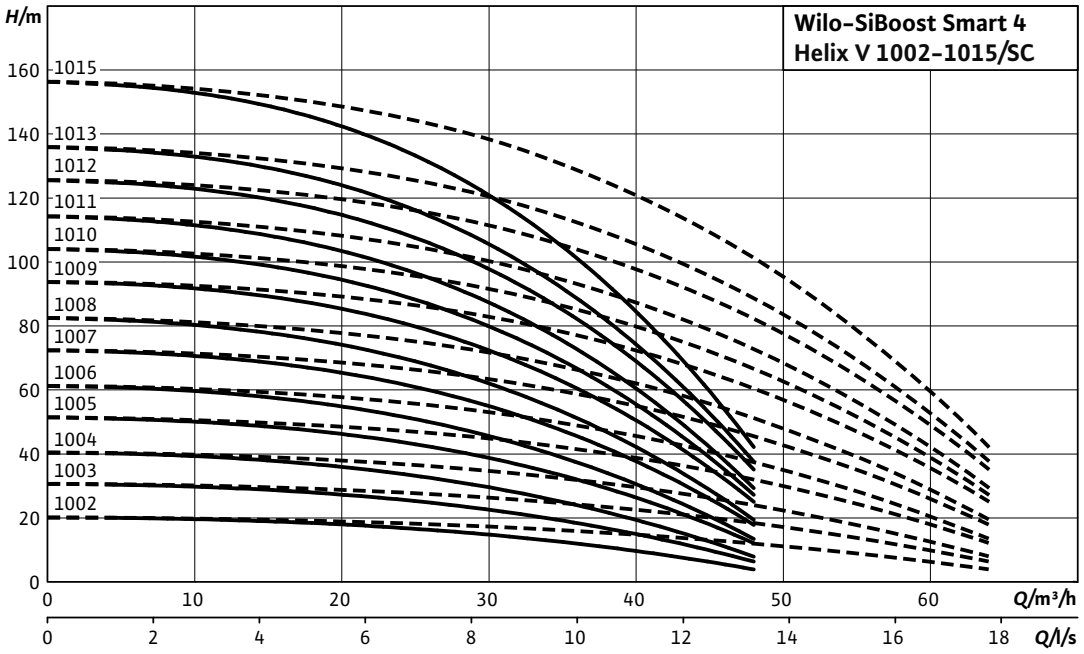

---- including standby pump

Motor data per pump					
Wilo-SiBoost Smart FC 4...	**Nominal motor power**	**Nominal current 3~400 V, 50 Hz**	**Motor efficiency**		
	P_2	I_N	$\eta_{m\ 50\%}$	$\eta_{m\ 75\%}$	$\eta_{m\ 100\%}$
	kW	A	%		
Helix V 1002	0.75	1.77	76.0	77.4	77.4
Helix V 1003	1.1	2.6	78.0	79.6	79.6
Helix V 1004	1.5	3.3	80.0	81.3	81.3
Helix V 1005	2.2	4.6	82.0	83.2	83.2
Helix V 1006	2.2	4.6	82.0	83.2	83.2
Helix V 1007	3	6.7	82.5	85.0	84.6
Helix V 1008	3	6.7	82.5	85.0	84.6
Helix V 1009	4	7.8	85.0	85.8	85.8
Helix V 1010	4	7.8	85.0	85.8	85.8
Helix V 1011	4	7.8	85.0	85.8	85.8
Helix V 1012	5.5	10.7	85.2	86.9	88.1
Helix V 1013	5.5	10.7	85.2	86.9	88.1
Helix V 1015	5.5	10.7	85.2	86.9	88.1

Motor efficiency based on 400 V, 50 Hz

Technical data Wilo-SiBoost Smart (FC) Helix V

Dimension drawing

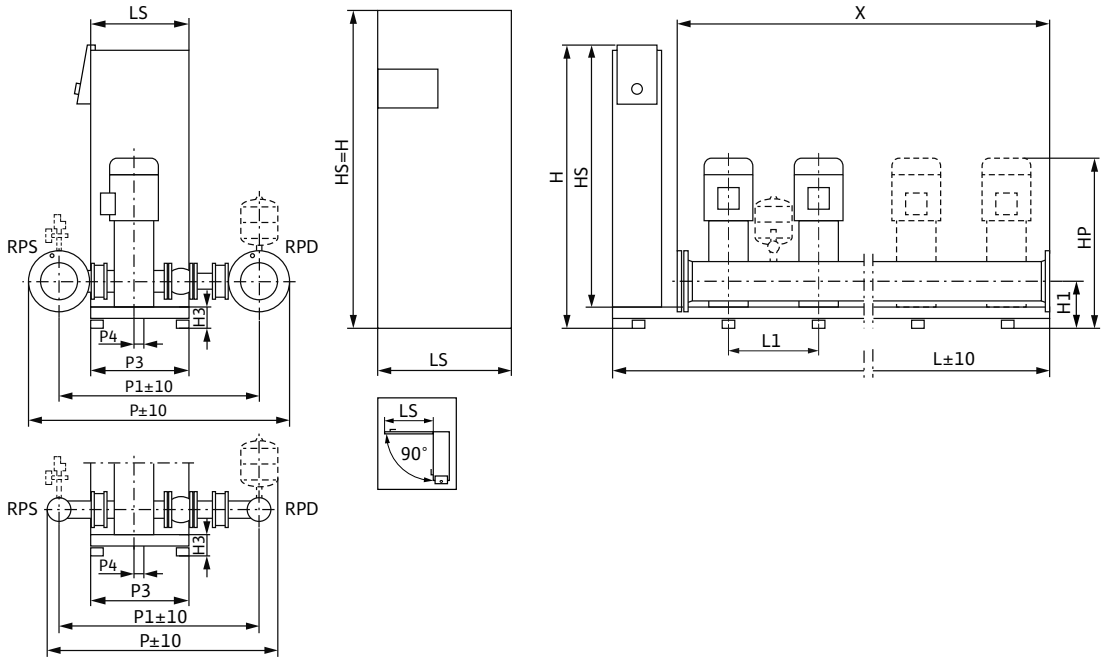

Sample systems are shown.
Accessories (to be ordered separately): Optional WMS low-water cut-out switchgear kit; diaphragm pressure vessel (8 l, PN16)
Installation surface: flat and horizontal
Installation location: dry, well ventilated and frost-proof
To facilitate maintenance, a service area of 1m around the installation is recommended.

Dimensions, weights

Wilo-SiBoost Smart FC 4...	Nominal diameters of the pipe connections on suction side	Nominal diameters of pipe connections on the pressure side	Dimensions													Weight approx.
	RPS	*RPD*	*H*	*H1*	*H3*	*HP*	*HS*	*L*	*L1*	*LS*	*P*	*P1*	*P3*	*P4*	*X*	*m*
			mm													kg
Helix V 1002	R 3	R 3	1405	170	90	751	1300	1550	300	400	865	767	420	30	1200	214
Helix V 1003	R 3	R 3	1405	170	90	789	1300	1550	300	400	865	767	420	30	1200	248
Helix V 1004	R 3	R 3	1405	170	90	859	1300	1550	300	400	865	767	420	30	1200	266
Helix V 1005	R 3	R 3	1405	170	90	896	1300	1550	300	400	865	767	420	30	1200	276
Helix V 1006	R 3	R 3	1405	170	90	934	1300	1550	300	400	865	767	420	30	1200	279
Helix V 1007	R 3	R 3	1405	170	90	1007	1300	1550	300	400	865	767	420	30	1200	291
Helix V 1008	R 3	R 3	1405	170	90	1044	1300	1550	300	400	865	767	420	30	1200	294
Helix V 1009	R 3	R 3	1405	170	90	1125	1300	1550	300	400	865	767	420	30	1200	331
Helix V 1010	R 3	R 3	1405	170	90	1163	1300	1550	300	400	865	767	420	30	1200	334
Helix V 1011	R 3	R 3	1405	170	90	1238	1300	1550	300	400	865	767	420	30	1200	337
Helix V 1012	R 3	R 3	1900	185	105	1245	1900	1200	300	800	865	767	450	25	1200	351
Helix V 1013	R 3	R 3	1900	185	105	1320	1900	1200	300	800	865	767	450	25	1200	454
Helix V 1015	R 3	R 3	1900	185	105	1395	1900	1200	300	800	865	767	450	25	1200	460

Technical data Wilo-SiBoost Smart (FC) Helix V

Pump curves

Wilo-SiBoost Smart 2 Helix V 1603-1608

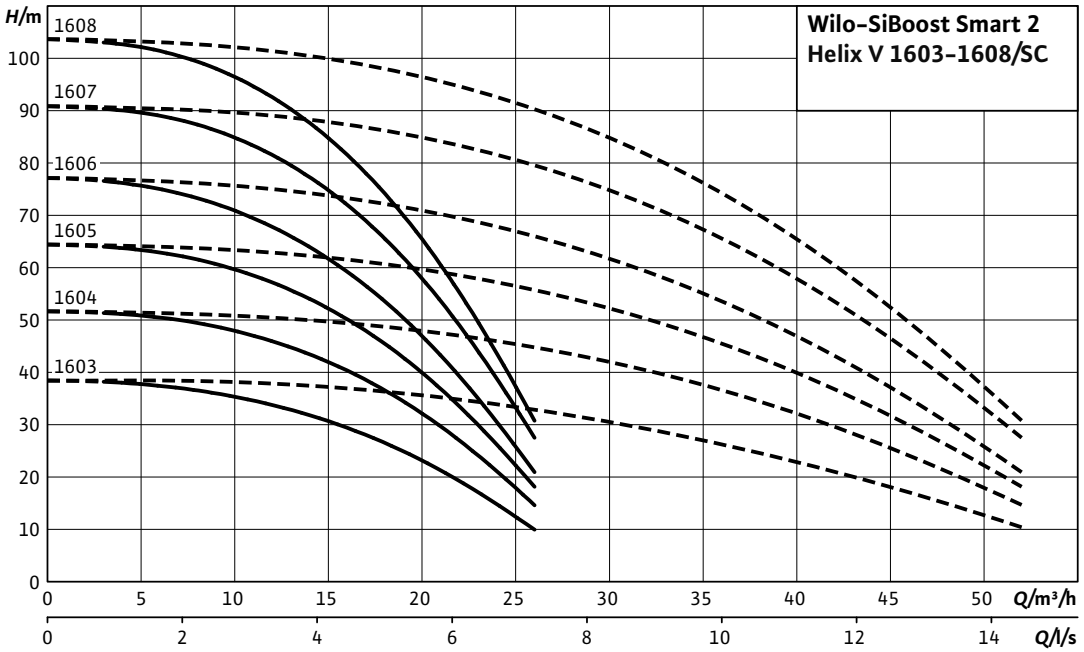

---- including standby pump

Motor data per pump					
Wilo-SiBoost Smart FC 2...	**Nominal motor power**	**Nominal current 3~400 V, 50 Hz**	**Motor efficiency**		
	P_2	I_N	$\eta_{m\ 50\%}$	$\eta_{m\ 75\%}$	$\eta_{m\ 100\%}$
	kW	A	%		
Helix V 1603	2.2	4.6	82.0	83.2	83.2
Helix V 1604	3	6.7	82.5	85.0	84.6
Helix V 1605	4	7.8	85.0	85.8	85.8
Helix V 1606	4	7.8	85.0	85.8	85.8
Helix V 1607	5.5	10.7	85.2	86.9	88.1
Helix V 1608	5.5	10.7	85.2	86.9	88.1

Motor efficiency based on 400 V, 50 Hz

Technical data Wilo-SiBoost Smart (FC) Helix V

Dimension drawing

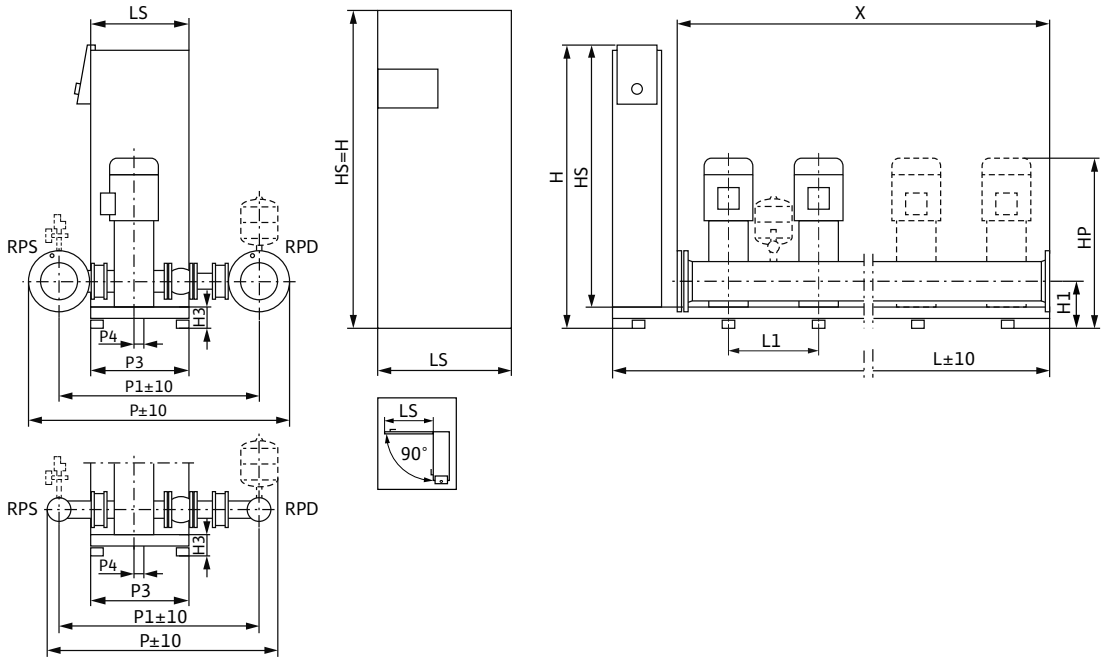

Sample systems are shown.
Accessories (to be ordered separately): Optional WMS low-water cut-out switchgear kit; diaphragm pressure vessel (8 l, PN16)
Installation surface: flat and horizontal
Installation location: dry, well ventilated and frost-proof
To facilitate maintenance, a service area of 1m around the installation is recommended.

Dimensions, weights

Wilo-SiBoost Smart FC 2...	Nominal diameters of the pipe connections on suction side	Nominal diameters of pipe connections on the pressure side	Dimensions													Weight approx.
	RPS	*RPD*	*H*	*H1*	*H3*	*HP*	*HS*	*L*	*L1*	*LS*	*P*	*P1*	*P3*	*P4*	*X*	*m*
			mm													kg
Helix V 1603	R 2½	R 2½	1405	180	90	869	1300	950	300	400	862	720	420	30	600	202
Helix V 1604	R 2½	R 2½	1405	180	90	954	1300	950	300	400	862	720	420	30	600	212
Helix V 1605	R 2½	R 2½	1405	180	90	1050	1300	950	300	400	862	720	420	30	600	235
Helix V 1606	R 2½	R 2½	1405	180	90	1100	1300	950	300	400	862	720	420	30	600	237
Helix V 1607	R 2½	R 2½	1900	195	105	1155	1900	600	300	800	862	720	450	25	600	257
Helix V 1608	R 2½	R 2½	1900	195	105	1205	1900	600	300	800	862	720	450	25	600	361

Technical data Wilo-SiBoost Smart (FC) Helix V

Pump curves

Wilo-SiBoost Smart 3 Helix V 1603-1608

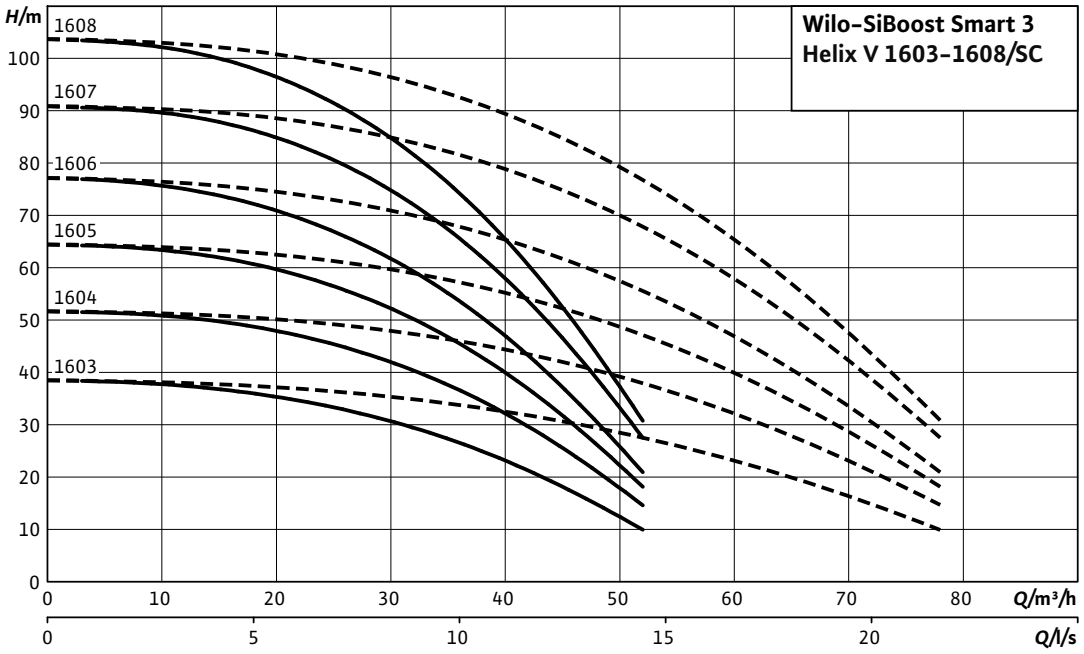

---- including standby pump

Motor data per pump

Wilo-SiBoost Smart FC 3...	Nominal motor power	Nominal current 3~400 V, 50 Hz	Motor efficiency		
	P_2	I_N	$\eta_{m\ 50\%}$	$\eta_{m\ 75\%}$	$\eta_{m\ 100\%}$
	kW	A	%		
Helix V 1603	2.2	4.6	82.0	83.2	83.2
Helix V 1604	3	6.7	82.5	85.0	84.6
Helix V 1605	4	7.8	85.0	85.8	85.8
Helix V 1606	4	7.8	85.0	85.8	85.8
Helix V 1607	5.5	10.7	85.2	86.9	88.1
Helix V 1608	5.5	10.7	85.2	86.9	88.1

Motor efficiency based on 400 V, 50 Hz

Technical data Wilo-SiBoost Smart (FC) Helix V

Dimension drawing

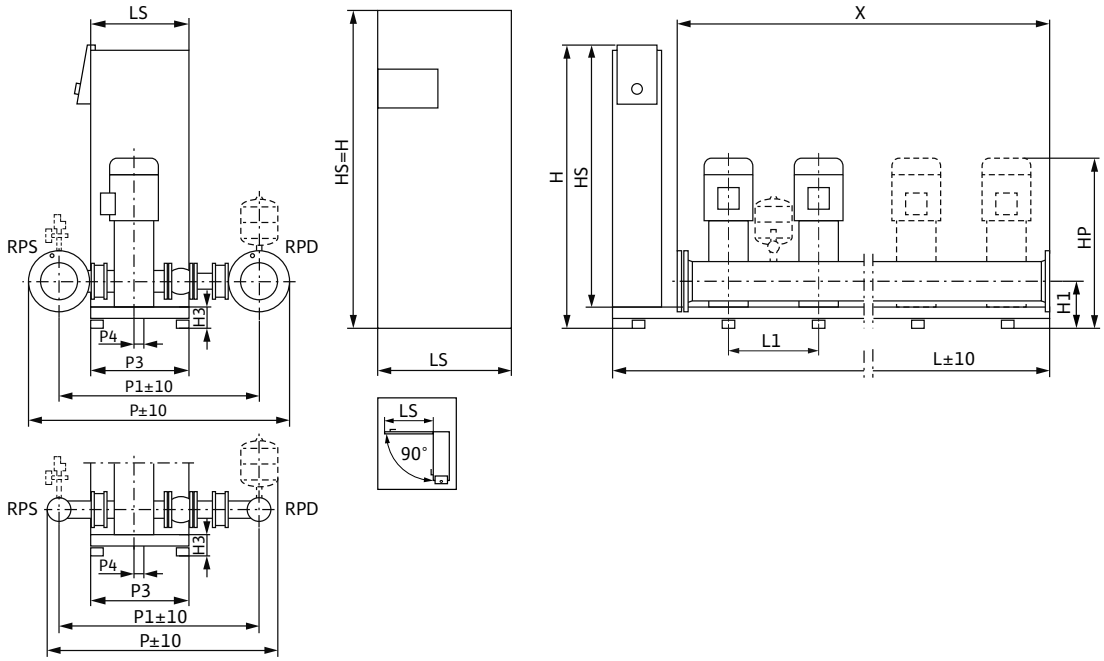

Sample systems are shown.
Accessories (to be ordered separately): Optional WMS low-water cut-out switchgear kit; diaphragm pressure vessel (8 l, PN16)
Installation surface: flat and horizontal
Installation location: dry, well ventilated and frost-proof
To facilitate maintenance, a service area of 1m around the installation is recommended.

Dimensions, weights

Wilo-SiBoost Smart FC 3...	Nominal diameters of the pipe connections on suction side	Nominal diameters of pipe connections on the pressure side	Dimensions													Weight approx.
	RPS	*RPD*	*H*	*H1*	*H3*	*HP*	*HS*	*L*	*L1*	*LS*	*P*	*P1*	*P3*	*P4*	*X*	*m*
			mm													kg
Helix V 1603	R 3	R 3	1405	180	90	869	1300	1250	300	400	883	735	420	30	900	264
Helix V 1604	R 3	R 3	1405	180	90	954	1300	1250	300	400	883	735	420	30	900	279
Helix V 1605	R 3	R 3	1405	180	90	1050	1300	1250	300	400	883	735	420	30	900	313
Helix V 1606	R 3	R 3	1405	180	90	1100	1300	1250	300	400	883	735	420	30	900	316
Helix V 1607	R 3	R 3	1900	195	105	1155	1900	900	300	800	883	735	450	25	900	458
Helix V 1608	R 3	R 3	1900	195	105	1205	1900	900	300	800	883	735	450	25	900	464

Technical data Wilo-SiBoost Smart (FC) Helix V

Pump curves

Wilo-SiBoost Smart 4 Helix V 1603-1608

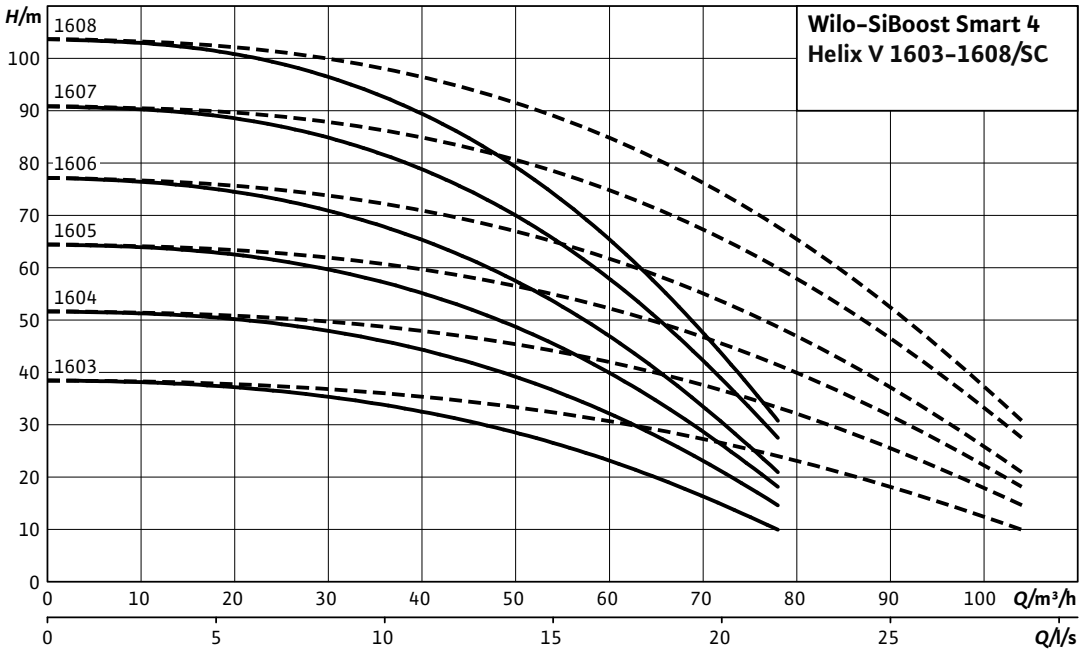

---- including standby pump

Motor data per pump					
Wilo-SiBoost Smart FC 4...	**Nominal motor power**	**Nominal current 3~400 V, 50 Hz**	**Motor efficiency**		
	P_2	I_N	$\eta_{m\ 50\%}$	$\eta_{m\ 75\%}$	$\eta_{m\ 100\%}$
	kW	A	%		
Helix V 1603	2.2	4.6	82.0	83.2	83.2
Helix V 1604	3	6.7	82.5	85.0	84.6
Helix V 1605	4	7.8	85.0	85.8	85.8
Helix V 1606	4	7.8	85.0	85.8	85.8
Helix V 1607	5.5	10.7	85.2	86.9	88.1
Helix V 1608	5.5	10.7	85.2	86.9	88.1

Motor efficiency based on 400 V, 50 Hz

Technical data Wilo-SiBoost Smart (FC) Helix V

Dimension drawing

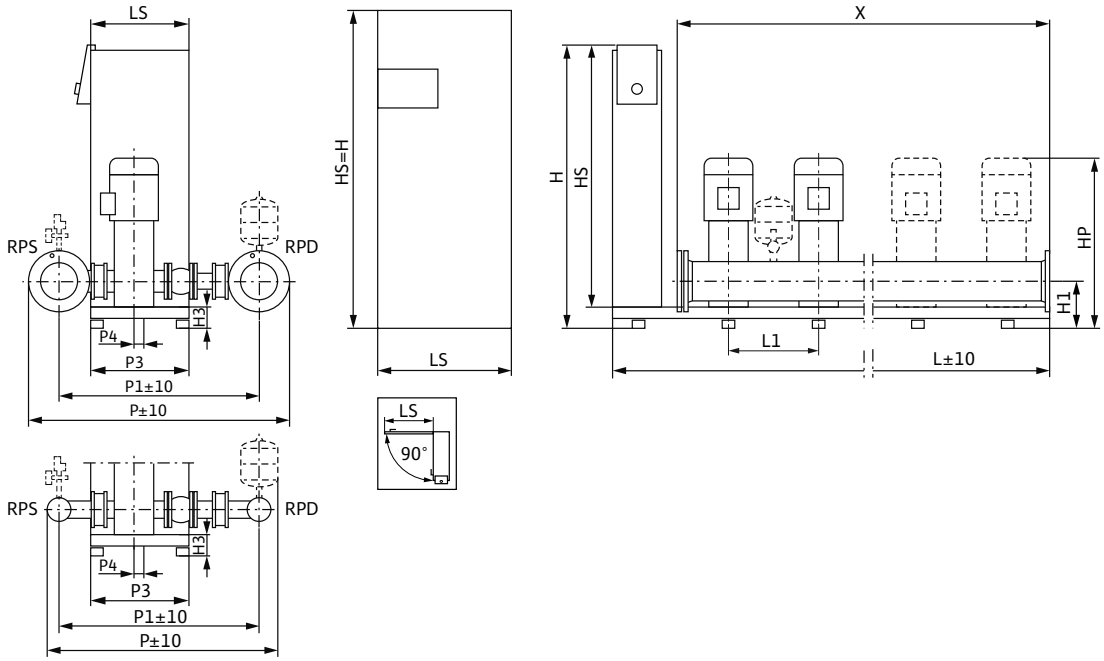

Sample systems are shown.
Accessories (to be ordered separately): Optional WMS low-water cut-out switchgear kit; diaphragm pressure vessel (8 l, PN16)
Installation surface: flat and horizontal
Installation location: dry, well ventilated and frost-proof
To facilitate maintenance, a service area of 1m around the installation is recommended.

Dimensions, weights

Wilo-SiBoost Smart FC 4...	Nominal diameters of the pipe connec-tions on suction side	Nominal diameters of pipe connec-tions on the pres-sure side	Dimensions													Weight approx.
	RPS	*RPD*	*H*	*H1*	*H3*	*HP*	*HS*	*L*	*L1*	*LS*	*P*	*P1*	*P3*	*P4*	*X*	*m*
			mm													kg
Helix V 1603	DN 100	DN 100	1405	180	90	869	1300	1550	300	400	986	766	420	30	1200	359
Helix V 1604	DN 100	DN 100	1405	180	90	954	1300	1550	300	400	986	766	420	30	1200	379
Helix V 1605	DN 100	DN 100	1405	180	90	1050	1300	1550	300	400	986	766	420	30	1200	424
Helix V 1606	DN 100	DN 100	1405	180	90	1100	1300	1550	300	400	986	766	420	30	1200	428
Helix V 1607	DN 100	DN 100	1900	195	105	1155	1900	1200	300	800	986	766	450	25	1200	590
Helix V 1608	DN 100	DN 100	1900	195	105	1205	1900	1200	300	800	986	766	450	25	1200	598

Pressure boosting

Multi-pump systems with fixed speed or speed-controlled base-load pump

Series description Wilo-Comfort CO-/COR-Helix V.../CC

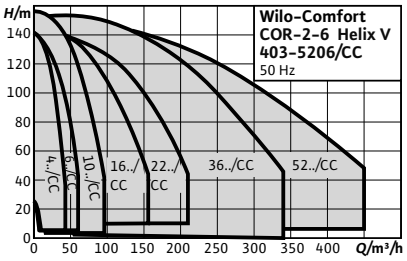

Design

Highly efficient, ready for connection water-supply unit (non self-priming) with 2 to 6 vertically arranged glanded stainless steel high-pressure multistage centrifugal pumps from the Helix V series switched in parallel, including Comfort-Controller CC (available with and without frequency converter)

Type key

Example:	**Wilo-COR-4 Helix V 2203/1/K/CC**
CO	Compact pressure boosting system
R	Control of the respective base-load pump via frequency converter in the switchgear
4	Number of pumps
Helix V	Pump series
22	Rated volume flow [m^3/h] of the single pump
03	Number of single-pump stages
1	Number of trimmed impellers of a pump
K	With cartridge mechanical seal
CC	Control unit; CC = Comfort-Controller

Application

- Fully automatic water supply and pressure boosting in residential, commercial and public buildings, hotels, hospitals, department stores and for industrial systems.
- Pumping of potable water, process water, cooling water, fire water (apart from fire-extinguishing systems in accordance with DIN 14462) or other water mixtures that do not attack the materials used chemically or mechanically and do not contain abrasive or long-fibre constituents

Special features/product advantages

- Heavy-duty system with Helix V series stainless steel high-pressure multistage centrifugal pumps for all requirements contained in DIN 1988 (EN 806)
- High-efficiency pump hydraulics in conjunction with IE2 standard motors
- Hydraulics of entire system are pressure-loss optimised.
- 2- 6 vertically arranged Helix V series high-pressure multistage centrifugal pumps switched in parallel
- Easy-to-use controller CC, with expanded functions, memory-programmable microcomputer control and graphics-ready touchscreen, menu-prompted input of operating parameters, available with or without frequency converter for stepless control of base-load pump

Technical data

- Mains connection 3~230 V/400 V ± 10%, 50 Hz
- Max. fluid temperature 50 °C (70 °C optional)
- Operating pressure 16 bar (25 bar optional)
- Inlet pressure 10 bar
- Nominal connection diameters on discharge side R 1½ - DN 200
- Nominal connection diameter on inlet side R 1½" - DN 200
- Nominal speed 2850 rpm
- Protection class IP 54 (CC control device)
- Fuse protection on mains side AC 3 according to motor power and EVU regulations
- Approved fluids (other fluids on request):
  - Potable water and secondary hot water
  - Cooling water
  - Fire water
- Note on fluids: Approved fluids are generally waters which do not attack the materials used, neither chemically nor mechanically, and do not contain any abrasive or long-fibre constituents.

Equipment/function

- 2-6 pumps per system of the Helix V 4 to Helix V 52 series with IE2 standard motor
- Automatic pump control via Comfort-Controller CC. The COR systems are additionally equipped with a frequency converter in the switch cabinet.
- Parts that come in contact with the fluid are corrosion-resistant
- Base frame made of galvanised steel, with height-adjustable vibration absorbers for insulation against structure-borne noise
- Pipework made of stainless steel 1.4571
- Shut-off valve on the suction and pressure sides of each pump
- Non-return valve on the pressure side of each pump
- Diaphragm pressure vessel 8 l, PN16, pressure side
- Pressure sensor, pressure side
- Pressure gauge, pressure side
- Optional low-water cut-out switchgear with pressure gauge, suction side

Materials

Helix V 4 to V 16

- Impellers, diffusors, stage housing made of stainless steel 1.4307
- Pump housing made of stainless steel 1.4301
- Shaft made of stainless steel 1.4057

Series description Wilo-Comfort CO-/COR-Helix V.../CC

- 1.4404 shaft protection sleeve
- O-ring gaskets made of EPDM (FKM gasket on request)
- Pipework made of stainless steel 1.4571

Helix V 22 to Helix V 52
- Impellers, diffusors, stage housing made of stainless steel 1.4307
- Pump housing made of cataphoretically coated EN-GJL 250 cast iron
- Shaft made of stainless steel 1.4057
- 1.4404 shaft protection sleeve
- O-ring gasket made of EPDM (FKM gasket on request)
- Pipework made of stainless steel 1.4571

Description/design
- Base frame: galvanised steel, with height-adjustable vibration absorbers for comprehensive insulation against structure-borne noise; other versions on request
- Pipework: complete pipework made of stainless steel, suitable for the connection of all piping materials used; the pipework is dimensioned according to the overall hydraulic performance of the pressure boosting system
- Pumps: 2 to 6 pumps switched in parallel of the Helix V 4 to Helix V 52 series; all parts that come in contact with the fluid are made of stainless steel for the Helix V 4 to V 16 series or of stainless steel/grey cast iron with cataphoretic coating for the Helix V 22 to Helix V 52 series; other versions on request. KTW/WRAS/ACS approval for all parts that come in contact with the fluid
- Valves: each pump is fitted on the suction and pressure side with a check valve or a shut-off valve with DVGW approval mark and on the pressure side with a DVGW/KTW-approved non-return valve
- Diaphragm pressure vessel: 8 l/PN16 arranged on the discharge side with a diaphragm made of butyl rubber, with DVGW/KTW approval, completely safe in accordance with food safety laws, for testing and inspection purposes, with drain and throughflow valve with DVGW/KTW approval in accordance with DIN 4807
- Pressure sensor: 4 to 20 mA, located on the discharge side for controlling the central Comfort-Controller CC
- Pressure display: pressure gauge (ø 63 mm) arranged on the discharge side; additional digital indication of the discharge pressure on the alphanumeric touchscreen on the Comfort-Controller
- Control device/controller; The system is equipped with a Comfort-Controller CC as standard; COR additionally with a frequency converter

Scope of delivery
- Factory-mounted, connection-ready pressure boosting system checked for functionality and impermeability
- Packaging
- Installation and operating instructions

Series description Wilo-Comfort CO-/COR-Helix V.../CC

Terminal diagram

CC system, direct starting

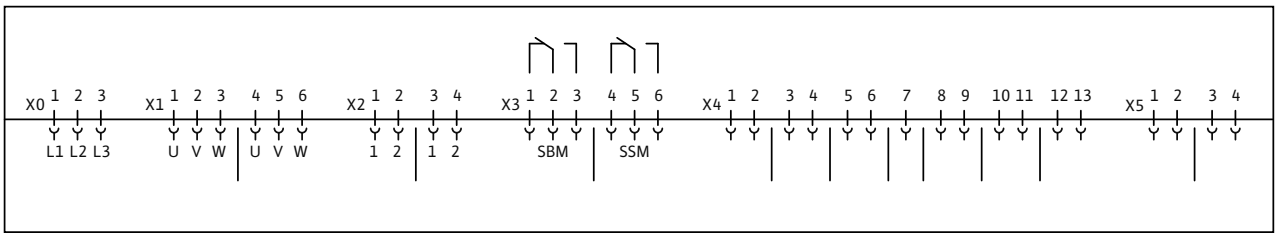

x0: Mains connection
x1: Power supply, pumps
- 1-3, pump 1
- 4-6, pump 2
x2: Thermal winding contact/PTC connection
- 1-2. pump 1
- 3-4, pump 2
- etc.
x3: Potential-free contacts
- 1-3, SBM (collective run signal)
- 4-6, SSM (collective fault signal)

x4: Sensor connections
- 1-2. external On/Off
- 3-4, dry-running protection
- 5, sensor (+); 6, sensor (In)
- 7, GND
- 8, analogue In (+); 9, analogue In (In)
- 10-11, setpoint 2
- 12-13, setpoint 3
x5: Analogue outputs
- 1-2. actual pressure (0...10 V)
- 3-4, actual frequency (0...10 V)

Series description Wilo-Comfort CO-/COR-Helix V.../CC

Terminal diagram

CC system, Y-Δ starting

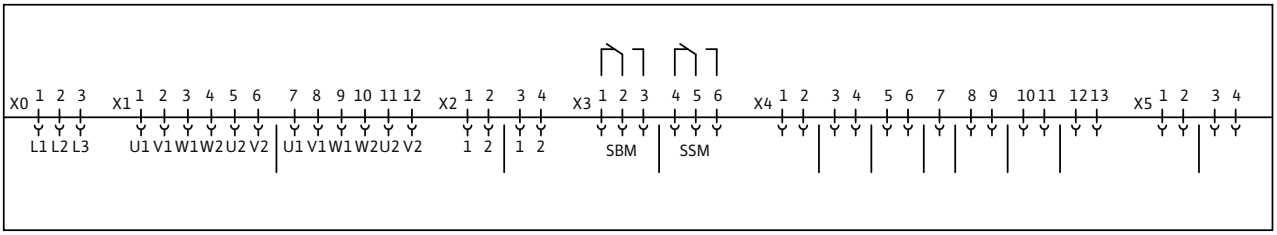

x0: Mains connection
x1: Power supply, pumps
- 1-6, pump 1
- 7-12. pump 2

x2: Thermal winding contact/PTC connection
- 1-2. pump 1
- 3-4, pump 2
- etc.

x3: Potential-free contacts
- 1-3, SBM (collective run signal)
- 4-6, SSM (collective fault signal)

x4: Sensor connections
- 1-2. external On/Off
- 3-4, dry-running protection
- 5, sensor (+); 6, sensor (In)
- 7, GND
- 8, analogue In (+); 9, analogue In (In)
- 10-11, setpoint 2
- 12-13, setpoint 3

x5: Analogue outputs
- 1-2. actual pressure (0...10 V)
- 3-4, actual frequency (0...10 V)

Technical data Wilo-Comfort CO-/COR-Helix V.../CC

Pump curves

Wilo-Comfort CO(R) -2 Helix V 403-418/CC

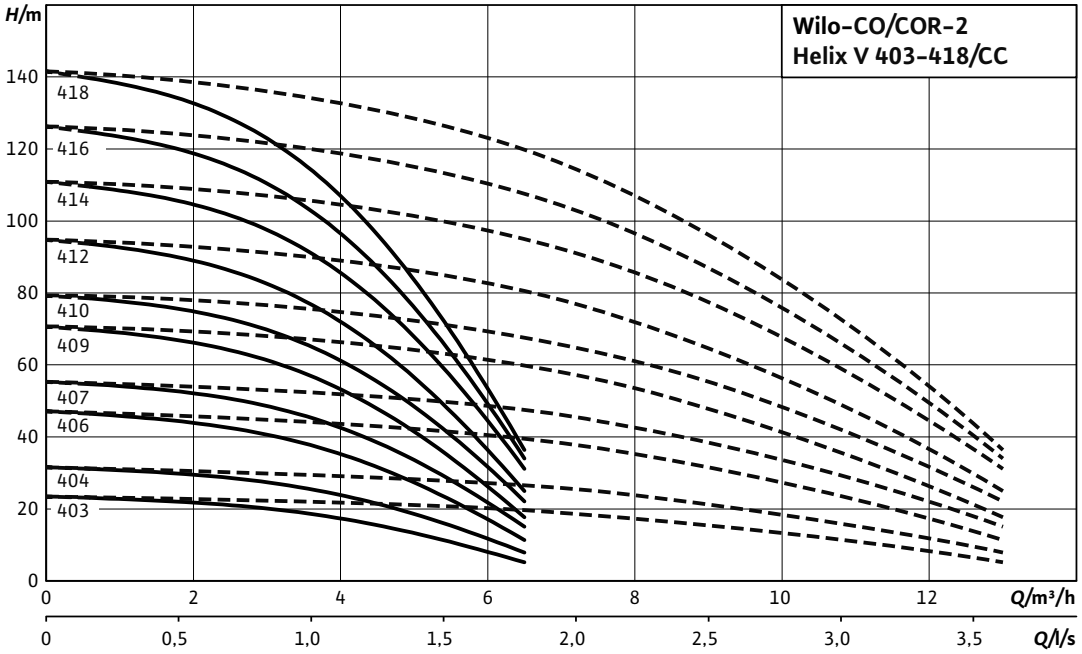

---- including standby pump

Motor data per pump

Wilo-Comfort CO(R)-2 Helix...	Nominal motor power	Nominal current 3~400 V, 50 Hz	Motor efficiency		
	P_2	I_N	$\eta_{m\ 50\%}$	$\eta_{m\ 75\%}$	$\eta_{m\ 100\%}$
	kW	A	%		
Helix V 403/K/CC	0.37	0.97	71.0	72.8	72.8
Helix V 404/K/CC	0.55	1.31	73.0	75.0	75.5
Helix V 406/K/CC	0.75	1.77	76.0	77.4	77.4
Helix V 407/K/CC	1.1	2.6	78.0	79.6	79.6
Helix V 409/K/CC	1.1	2.6	78.0	79.6	79.6
Helix V 410/K/CC	1.5	3.3	80.0	81.3	81.3
Helix V 412/K/CC	1.5	3.3	80.0	81.3	81.3
Helix V 414/K/CC	2.2	4.6	82.0	83.2	83.2
Helix V 416/K/CC	2.2	4.6	82.0	83.2	83.2
Helix V 418/K/CC	2.2	4.6	82.0	83.2	83.2

Motor efficiency based on 400 V, 50 Hz

Technical data Wilo-Comfort CO-/COR-Helix V.../CC

Dimension drawing

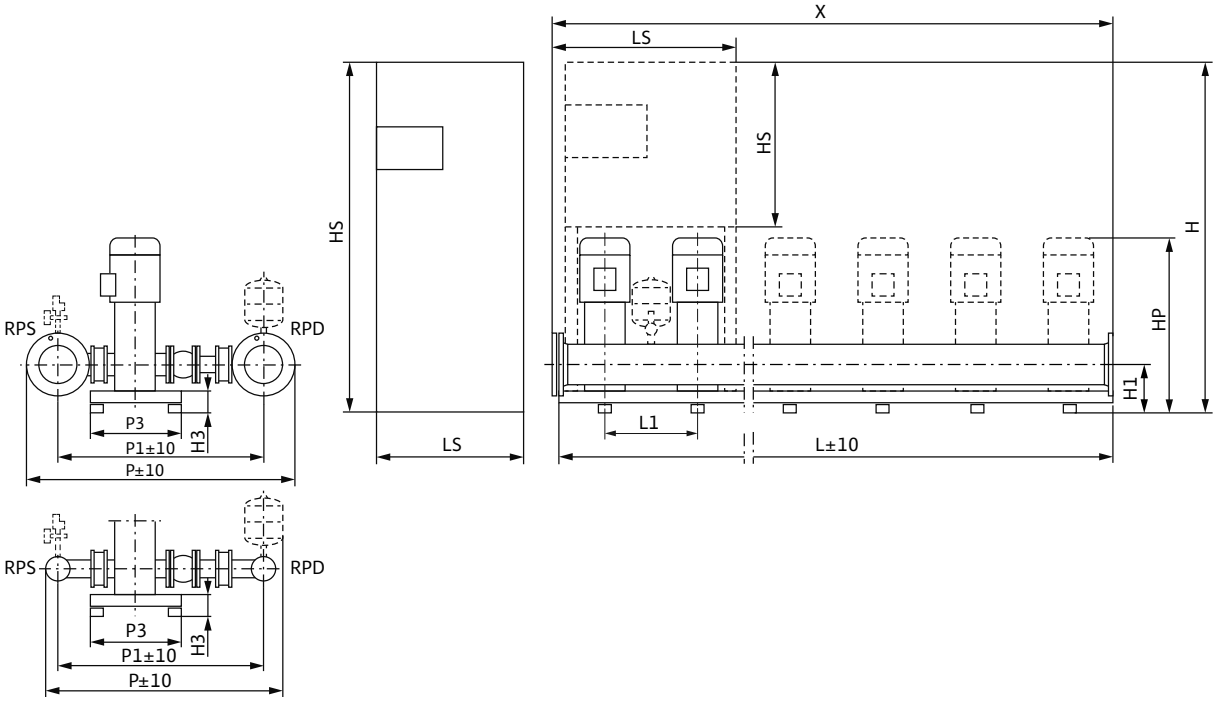

Sample systems are shown. Switchbox position depends on pump height.
Accessories (to be ordered separately): Optional WMS low-water cut-out switchgear kit
Installation surface: flat and horizontal
Installation location: dry, well ventilated and frost-proof

Dimensions, weights

Wilo-Comfort CO(R)-2 Helix...	Nominal diameters of the pipe connections on suction side	Nominal diameters of pipe connections on the pressure side	Dimensions																Weight approx.	
											CO	COR	CO	COR	CO	COR	CO	COR	CO	COR
	RPS	*RPD*	*H1*	*H3*	*HP*	*L1*	*P*	*P1*	*P3*	*X*	*H*		*HS*		*L*		*LS*		*m*	
			mm																kg	
Helix V 403/K/CC	R 1½	Rp 1½	140	90	710	300	737	610	300	600	1670	1670	600	760	600	600	600	600	123	136
Helix V 404/K/CC	R 1½	Rp 1½	140	90	735	300	737	610	300	600	1670	1670	600	760	600	600	600	600	125	138
Helix V 406/K/CC	R 1½	Rp 1½	140	90	805	300	737	610	300	600	1670	1870	600	760	600	600	600	600	131	144
Helix V 407/K/CC	R 1½	Rp 1½	140	90	830	300	737	610	300	600	1670	1870	600	760	600	600	600	600	135	148
Helix V 409/K/CC	R 1½	Rp 1½	140	90	880	300	737	610	300	600	1670	1870	600	760	600	600	600	600	137	150
Helix V 410/K/CC	R 1½	Rp 1½	140	90	937	300	737	610	300	600	1870	1870	600	760	600	600	600	600	147	160
Helix V 412/K/CC	R 1½	Rp 1½	140	90	987	300	737	610	300	600	1870	1870	600	760	600	600	600	600	149	162
Helix V 414/K/CC	R 1½	Rp 1½	140	90	1037	300	737	610	450	600	1870	1670	600	760	600	1200	600	600	157	204
Helix V 416/K/CC	R 1½	Rp 1½	140	90	1087	300	737	610	450	600	1670	1670	600	760	1200	1200	600	600	189	206
Helix V 418/K/CC	R 1½	Rp 1½	140	90	1137	300	737	610	450	600	1670	1670	600	760	1200	1200	600	600	191	208

Technical data Wilo-Comfort CO-/COR-Helix V.../CC

Pump curves

Wilo-Comfort CO(R) -3 Helix V 403-418/CC

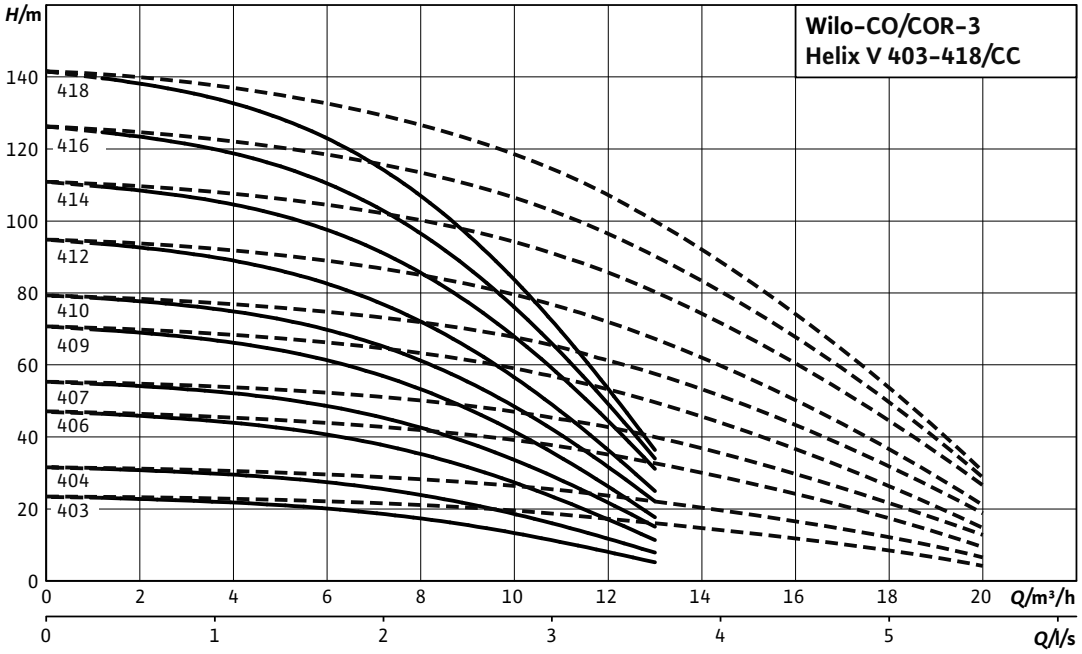

---- including standby pump

Motor data per pump

Wilo-Comfort CO(R)-3Helix...	Nominal motor power	Nominal current 3~400 V, 50 Hz	Motor efficiency		
	P_2	I_N	$\eta_{m\ 50\%}$	$\eta_{m\ 75\%}$	$\eta_{m\ 100\%}$
	kW	A	%		
Helix V 403/K/CC	0.37	0.97	71.0	72.8	72.8
Helix V 404/K/CC	0.55	1.31	73.0	75.0	75.5
Helix V 406/K/CC	0.75	1.77	76.0	77.4	77.4
Helix V 407/K/CC	1.1	2.6	78.0	79.6	79.6
Helix V 409/K/CC	1.1	2.6	78.0	79.6	79.6
Helix V 410/K/CC	1.5	3.3	80.0	81.3	81.3
Helix V 412/K/CC	1.5	3.3	80.0	81.3	81.3
Helix V 414/K/CC	2.2	4.6	82.0	83.2	83.2
Helix V 416/K/CC	2.2	4.6	82.0	83.2	83.2
Helix V 418/K/CC	2.2	4.6	82.0	83.2	83.2

Motor efficiency based on 400 V, 50 Hz

Technical data Wilo-Comfort CO-/COR-Helix V.../CC

Dimension drawing

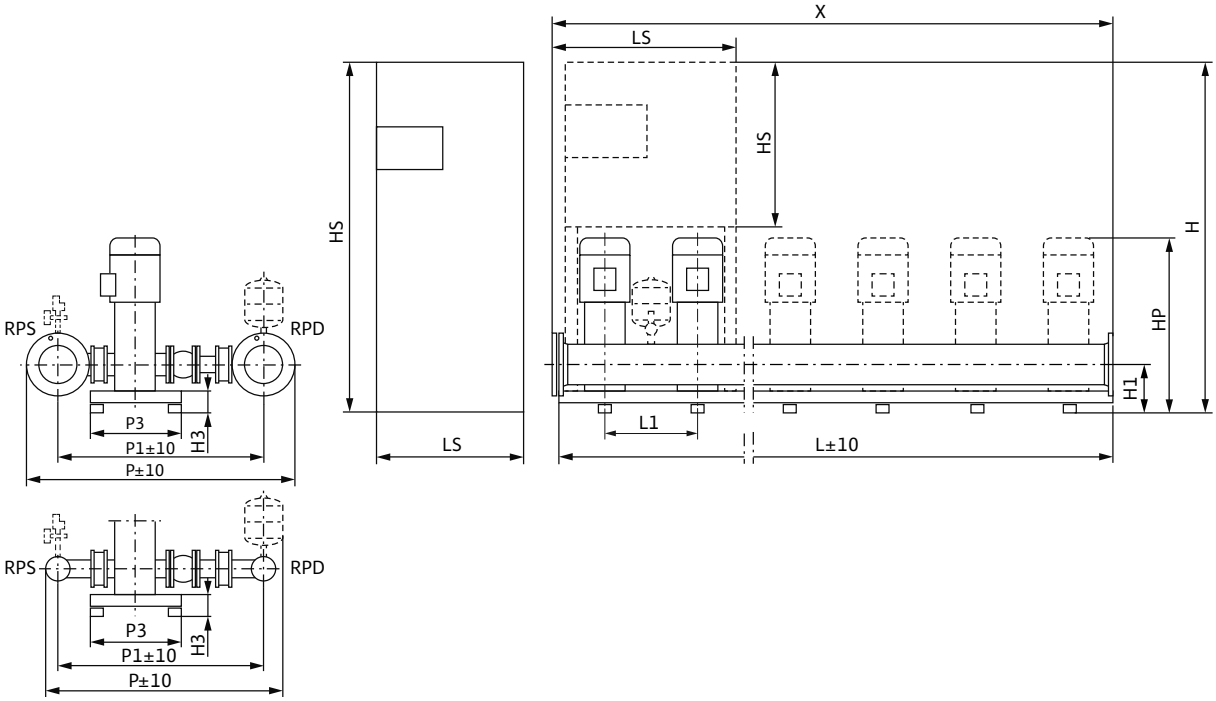

Sample systems are shown.
Accessories (to be ordered separately): Optional WMS low-water cut-out switchgear kit; diaphragm pressure vessel (8 l, PN16)
Installation surface: flat and horizontal
Installation location: dry, well ventilated and frost-proof

Dimensions, weights

Wilo-Comfort CO(R)-3Helix...	Nominal diameters of the pipe connections on suction side	Nominal diameters of pipe connections on the pressure side	Dimensions																Weight approx.	
											CO	COR	CO	COR	CO	COR	CO	COR	CO	COR
	RPS	*RPD*	*H1*	*H3*	*HP*	*L1*	*P*	*P1*	*P3*	*X*	*H*		*HS*		*L*		*LS*		*m*	
			mm																kg	
Helix V 403/K/CC	R 1½	Rp 1½	140	90	710	300	756	623	300	900	1670	1670	600	760	900	900	600	600	159	171
Helix V 404/K/CC	R 1½	Rp 1½	140	90	735	300	756	623	300	900	1670	1670	600	760	900	900	600	600	162	174
Helix V 406/K/CC	R 1½	Rp 1½	140	90	805	300	756	623	300	900	1670	1870	600	760	900	900	600	600	171	183
Helix V 407/K/CC	R 1½	Rp 1½	140	90	830	300	756	623	300	900	1670	1870	600	760	900	900	600	600	177	189
Helix V 409/K/CC	R 1½	Rp 1½	140	90	880	300	756	623	300	900	1670	1870	600	760	900	900	600	600	180	192
Helix V 410/K/CC	R 1½	Rp 1½	140	90	937	300	756	623	300	900	1870	1870	600	760	900	900	600	600	195	207
Helix V 412/K/CC	R 1½	Rp 1½	140	90	987	300	756	623	300	900	1870	1870	600	760	900	900	600	600	198	210
Helix V 414/K/CC	R 1½	Rp 1½	140	90	1037	300	756	623	470	900	1870	1670	600	760	900	1500	600	600	210	249
Helix V 416/K/CC	R 1½	Rp 1½	140	90	1087	300	756	623	470	900	1670	1670	600	760	1500	1500	600	600	237	252
Helix V 418/K/CC	R 1½	Rp 1½	140	90	1137	300	756	623	470	900	1670	1670	600	760	1500	1500	600	600	240	255

Technical data Wilo-Comfort CO-/COR-Helix V.../CC

Pump curves

Wilo-Comfort CO(R) -4 Helix V 403-418/CC

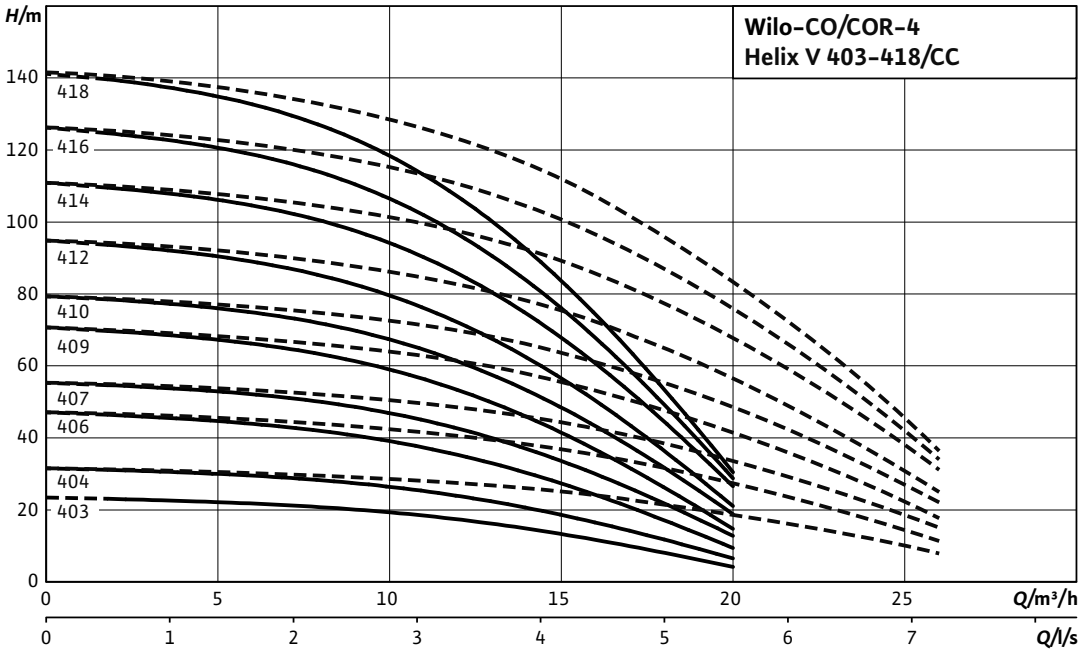

---- including standby pump

Motor data per pump

Wilo-Comfort CO(R)-4Helix...	Nominal motor power	Nominal current 3~400 V, 50 Hz	Motor efficiency		
	P_2	I_N	$\eta_{m\ 50\%}$	$\eta_{m\ 75\%}$	$\eta_{m\ 100\%}$
	kW	A	%		
Helix V 403/K/CC	0.37	0.97	71.0	72.8	72.8
Helix V 404/K/CC	0.55	1.31	73.0	75.0	75.5
Helix V 406/K/CC	0.75	1.77	76.0	77.4	77.4
Helix V 407/K/CC	1.1	2.6	78.0	79.6	79.6
Helix V 409/K/CC	1.1	2.6	78.0	79.6	79.6
Helix V 410/K/CC	1.5	3.3	80.0	81.3	81.3
Helix V 412/K/CC	1.5	3.3	80.0	81.3	81.3
Helix V 414/K/CC	2.2	4.6	82.0	83.2	83.2
Helix V 416/K/CC	2.2	4.6	82.0	83.2	83.2
Helix V 418/K/CC	2.2	4.6	82.0	83.2	83.2

Motor efficiency based on 400 V, 50 Hz

Technical data Wilo-Comfort CO-/COR-Helix V.../CC

Dimension drawing

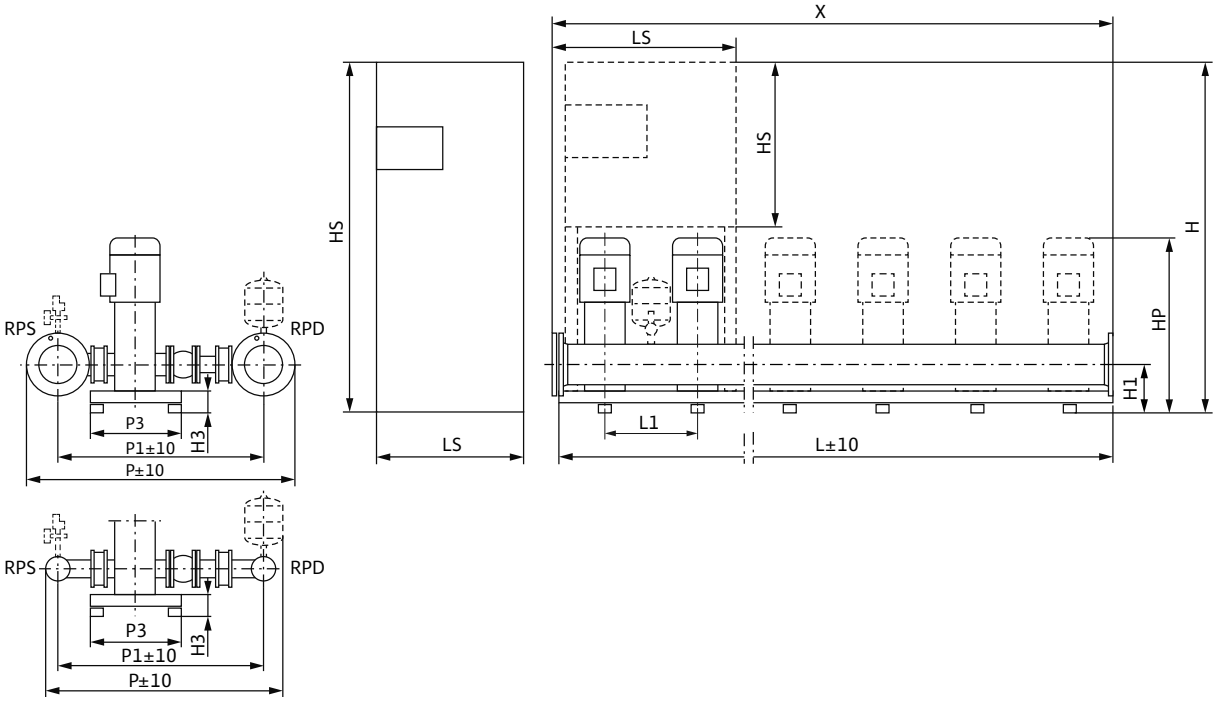

Sample systems are shown.
Accessories (to be ordered separately): Optional WMS low-water cut-out switchgear kit; diaphragm pressure vessel (8 l, PN16)
Installation surface: flat and horizontal
Installation location: dry, well ventilated and frost-proof

Dimensions, weights

Wilo-Comfort CO(R)-4Helix...	Nominal diameters of the pipe connections on suction side	Nominal diameters of pipe connections on the pressure side	Dimensions																Weight approx.	
											CO	COR	CO	COR	CO	COR	CO	COR	CO	COR
	RPS	*RPD*	*H1*	*H3*	*HP*	*L1*	*P*	*P1*	*P3*	*X*	*H*		*HS*		*L*		*LS*		*m*	
			mm																kg	
Helix V 403/K/CC	R 2	R 2	140	90	710	300	756	623	300	1200	1670	1670	600	760	1200	1200	600	600	195	207
Helix V 404/K/CC	R 2	R 2	140	90	735	300	756	623	300	1200	1670	1670	600	760	1200	1200	600	600	199	211
Helix V 406/K/CC	R 2	R 2	140	90	805	300	756	623	300	1200	1670	1870	600	760	1200	1200	600	600	211	223
Helix V 407/K/CC	R 2	R 2	140	90	830	300	756	623	300	1200	1670	1870	600	760	1200	1200	600	600	219	231
Helix V 409/K/CC	R 2	R 2	140	90	880	300	756	623	300	1200	1670	1870	600	760	1200	1200	600	600	223	235
Helix V 410/K/CC	R 2	R 2	140	90	937	300	756	623	300	1200	1870	1870	600	760	1200	1200	600	600	243	255
Helix V 412/K/CC	R 2	R 2	140	90	987	300	756	623	300	1200	1870	1870	600	760	1200	1200	600	600	247	259
Helix V 414/K/CC	R 2	R 2	140	90	1037	300	756	623	470	1200	1870	1670	600	760	1200	1800	600	600	263	305
Helix V 416/K/CC	R 2	R 2	140	90	1087	300	756	623	470	1200	1670	1670	600	760	1800	1800	600	600	294	309
Helix V 418/K/CC	R 2	R 2	140	90	1137	300	756	623	470	1200	1670	1670	600	760	1800	1800	600	600	298	313

Technical data Wilo-Comfort CO-/COR-Helix V.../CC

Pump curves

Wilo-Comfort CO(R) -5 Helix V 403-418/CC

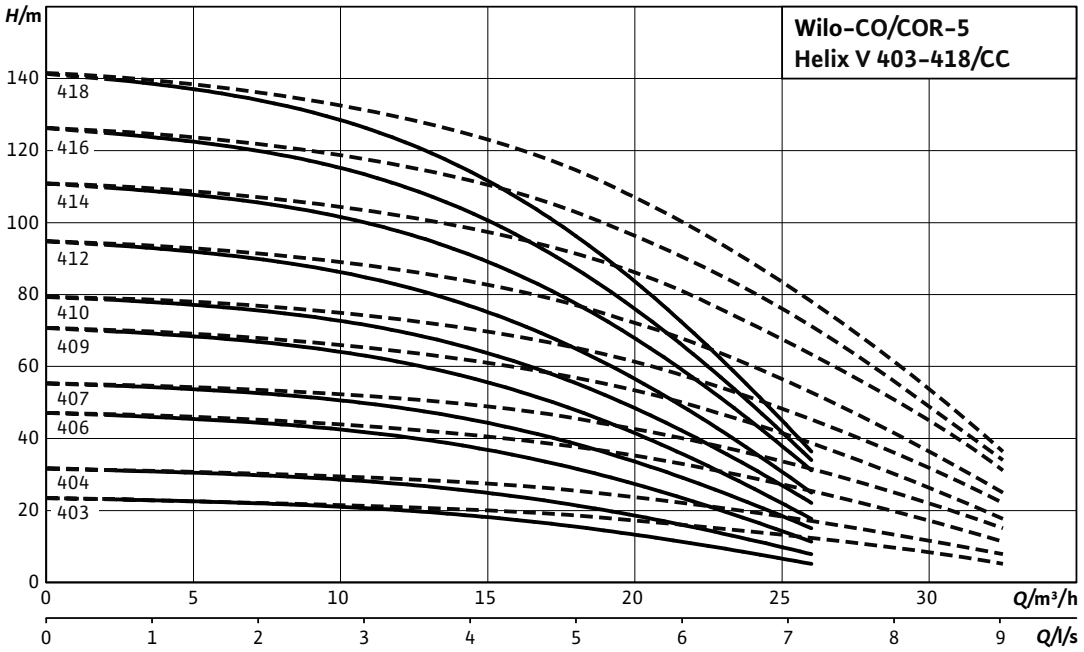

---- including standby pump

Motor data per pump

Wilo-Comfort CO(R)-5Helix...	Nominal motor power	Nominal current 3~400 V, 50 Hz	Motor efficiency		
	P_2	I_N	$\eta_{m\ 50\%}$	$\eta_{m\ 75\%}$	$\eta_{m\ 100\%}$
	kW	A	%		
Helix V 403/K/CC	0.37	0.97	71.0	72.8	72.8
Helix V 404/K/CC	0.55	1.31	73.0	75.0	75.5
Helix V 406/K/CC	0.75	1.77	76.0	77.4	77.4
Helix V 407/K/CC	1.1	2.6	78.0	79.6	79.6
Helix V 409/K/CC	1.1	2.6	78.0	79.6	79.6
Helix V 410/K/CC	1.5	3.3	80.0	81.3	81.3
Helix V 412/K/CC	1.5	3.3	80.0	81.3	81.3
Helix V 414/K/CC	2.2	4.6	82.0	83.2	83.2
Helix V 416/K/CC	2.2	4.6	82.0	83.2	83.2
Helix V 418/K/CC	2.2	4.6	82.0	83.2	83.2

Motor efficiency based on 400 V, 50 Hz

Technical data Wilo-Comfort CO-/COR-Helix V.../CC

Dimension drawing

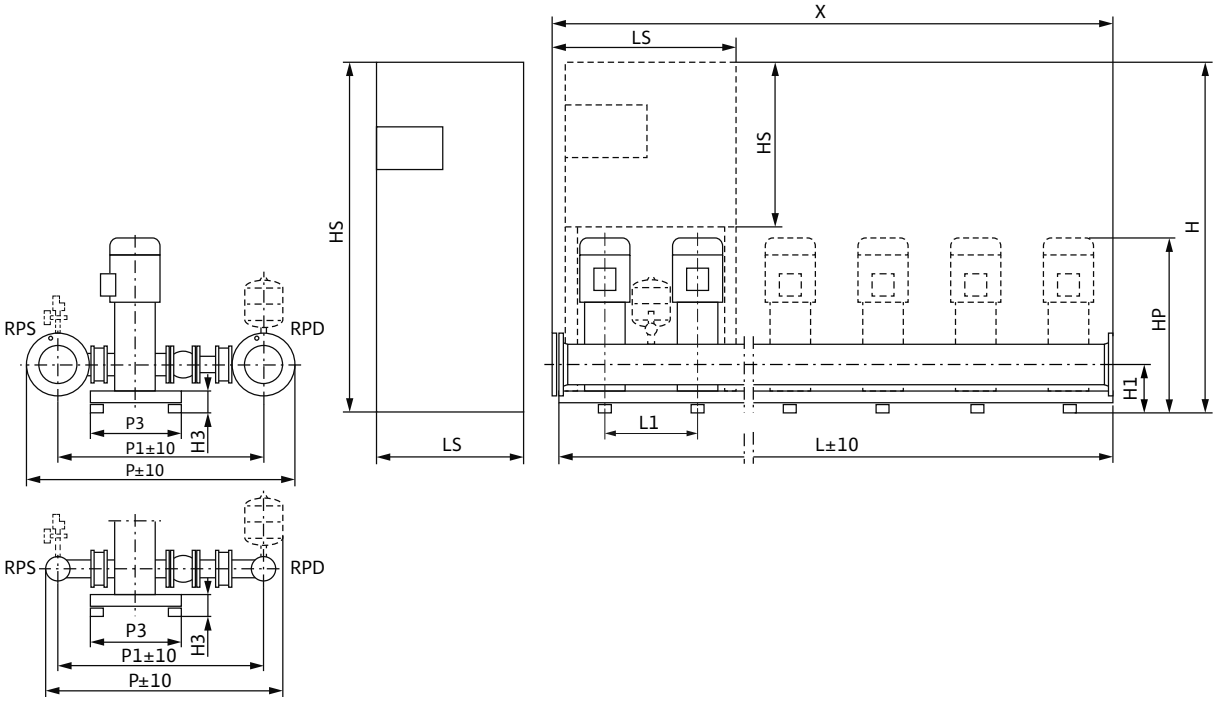

Sample systems are shown.
Accessories (to be ordered separately): Optional WMS low-water cut-out switchgear kit; diaphragm pressure vessel (8 l, PN16)
Installation surface: flat and horizontal
Installation location: dry, well ventilated and frost-proof

Dimensions, weights

Wilo-Comfort CO(R)-5Helix...	Nominal diameters of the pipe connections on suction side	Nominal diameters of pipe connections on the pressure side	Dimensions																Weight approx.	
											CO	COR	CO	COR	CO	COR	CO	COR	CO	COR
	RPS	*RPD*	*H1*	*H3*	*HP*	*L1*	*P*	*P1*	*P3*	*X*	*H*		*HS*		*L*		*LS*		*m*	
			mm																kg	
Helix V 403/K/CC	R 2½	R 2½	140	90	710	300	780	639	300	1500	1670	1670	600	760	1500	1500	600	760	234	255
Helix V 404/K/CC	R 2½	R 2½	140	90	735	300	780	639	300	1500	1670	1670	600	760	1500	1500	600	760	239	260
Helix V 406/K/CC	R 2½	R 2½	140	90	805	300	780	639	300	1500	1670	1870	600	760	1500	1500	600	760	254	275
Helix V 407/K/CC	R 2½	R 2½	140	90	830	300	780	639	300	1500	1670	1870	600	760	1500	1500	600	760	264	285
Helix V 409/K/CC	R 2½	R 2½	140	90	880	300	780	639	300	1500	1670	1870	600	760	1500	1500	600	760	269	290
Helix V 410/K/CC	R 2½	R 2½	140	90	937	300	780	639	300	1500	1870	1870	600	760	1500	1500	600	760	294	315
Helix V 412/K/CC	R 2½	R 2½	140	90	987	300	780	639	300	1500	1870	1870	600	760	1500	1500	600	760	299	320
Helix V 414/K/CC	R 2½	R 2½	140	90	1037	300	780	639	470	1500	1870	1670	600	760	1500	2300	600	760	319	375
Helix V 416/K/CC	R 2½	R 2½	140	90	1087	300	780	639	470	1500	1670	1670	600	760	2300	2300	600	760	355	380
Helix V 418/K/CC	R 2½	R 2½	140	90	1137	300	780	639	470	1500	1670	1670	600	760	2300	2300	600	760	360	385

Technical data Wilo-Comfort CO-/COR-Helix V.../CC

Pump curves

Wilo-Comfort CO(R) -6 Helix V 403-418/CC

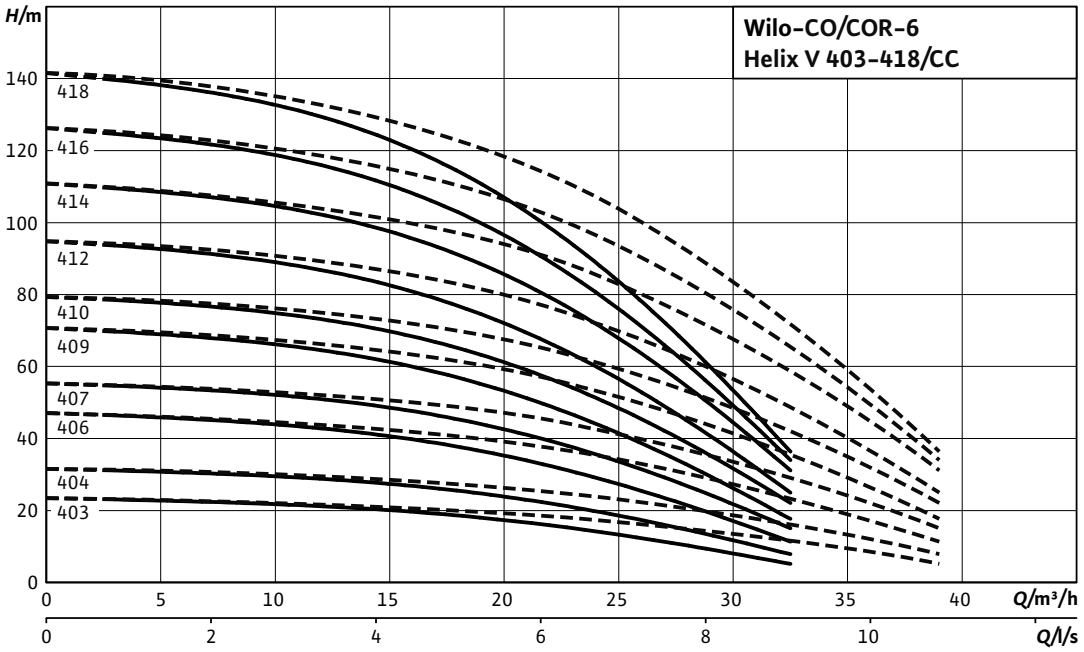

---- including standby pump

Motor data per pump

Wilo-Comfort CO(R)-6Helix...	Nominal motor power	Nominal current 3~400 V, 50 Hz	Motor efficiency		
	P_2	I_N	$\eta_{m\ 50\%}$	$\eta_{m\ 75\%}$	$\eta_{m\ 100\%}$
	kW	A	%		
Helix V 403/K/CC	0.37	0.97	71.0	72.8	72.8
Helix V 404/K/CC	0.55	1.31	73.0	75.0	75.5
Helix V 406/K/CC	0.75	1.77	76.0	77.4	77.4
Helix V 407/K/CC	1.1	2.6	78.0	79.6	79.6
Helix V 409/K/CC	1.1	2.6	78.0	79.6	79.6
Helix V 410/K/CC	1.5	3.3	80.0	81.3	81.3
Helix V 412/K/CC	1.5	3.3	80.0	81.3	81.3
Helix V 414/K/CC	2.2	4.6	82.0	83.2	83.2
Helix V 416/K/CC	2.2	4.6	82.0	83.2	83.2
Helix V 418/K/CC	2.2	4.6	82.0	83.2	83.2

Motor efficiency based on 400 V, 50 Hz

Technical data Wilo-Comfort CO-/COR-Helix V.../CC

Dimension drawing

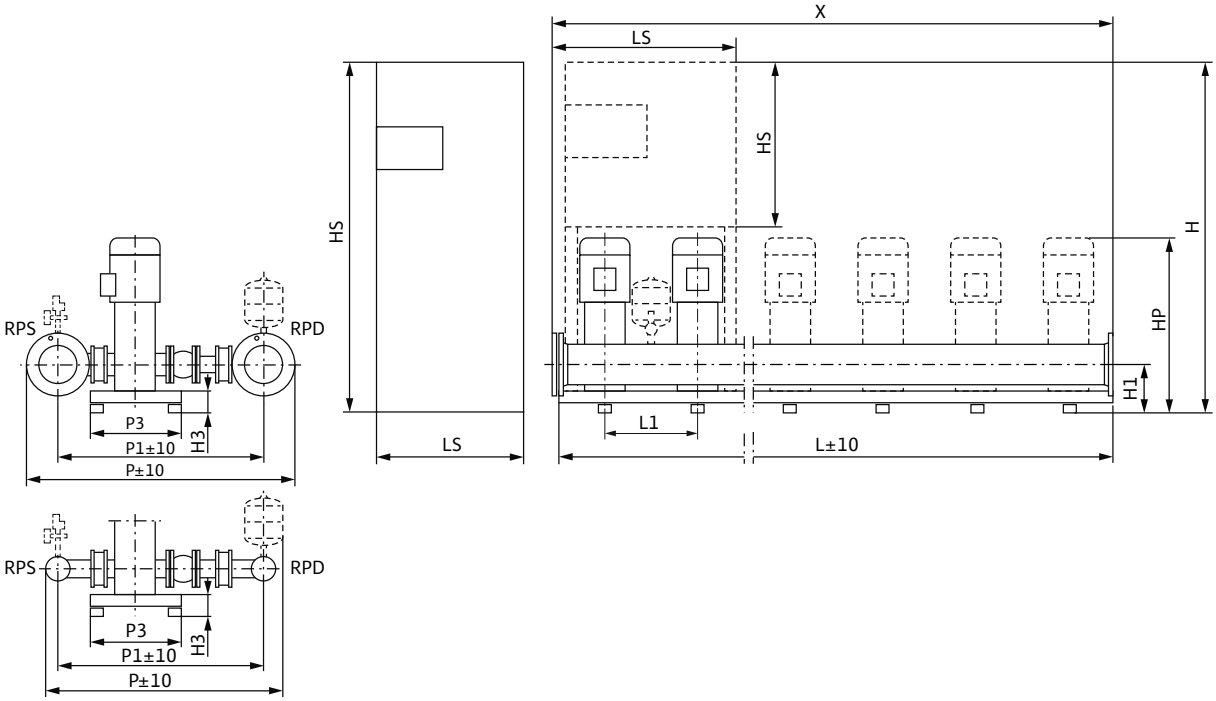

Sample systems are shown. Switchbox position depends on pump height.
Accessories (to be ordered separately): Optional WMS low-water cut-out switchgear kit
Installation surface: flat and horizontal
Installation location: dry, well ventilated and frost-proof

Dimensions, weights

Wilo-Comfort CO(R)-6Helix...	Nominal diameters of the pipe connections on suction side	Nominal diameters of pipe connections on the pressure side	Dimensions																Weight approx.	
											CO	COR	CO	COR	CO	COR	CO	COR	CO	COR
	RPS	*RPD*	*H1*	*H3*	*HP*	*L1*	*P*	*P1*	*P3*	*X*	*H*		*HS*		*L*		*LS*		*m*	
			mm																kg	
Helix V 403/K/CC	R 2½	R 2½	140	90	710	300	780	639	300	1800	1670	1670	600	760	1800	1800	600	760	269	290
Helix V 404/K/CC	R 2½	R 2½	140	90	735	300	780	639	300	1800	1670	1670	600	760	1800	1800	600	760	275	296
Helix V 406/K/CC	R 2½	R 2½	140	90	805	300	780	639	300	1800	1670	1870	600	760	1800	1800	600	760	293	314
Helix V 407/K/CC	R 2½	R 2½	140	90	830	300	780	639	300	1800	1670	1870	600	760	1800	1800	600	760	305	326
Helix V 409/K/CC	R 2½	R 2½	140	90	880	300	780	639	300	1800	1670	1870	600	760	1800	1800	600	760	311	332
Helix V 410/K/CC	R 2½	R 2½	140	90	937	300	780	639	300	1800	1870	1870	600	760	1800	1800	600	760	341	362
Helix V 412/K/CC	R 2½	R 2½	140	90	987	300	780	639	300	1800	1870	1870	600	760	1800	1800	600	760	347	368
Helix V 414/K/CC	R 2½	R 2½	140	90	1037	300	780	639	470	1800	1870	1670	600	760	1800	2600	600	760	371	431
Helix V 416/K/CC	R 2½	R 2½	140	90	1087	300	780	639	470	1800	1670	1670	600	760	2600	2600	600	760	411	437
Helix V 418/K/CC	R 2½	R 2½	140	90	1137	300	780	639	470	1800	1670	1670	600	760	2600	2600	600	760	417	443

Technical data Wilo-Comfort CO-/COR-Helix V.../CC

Pump curves

Wilo-Comfort CO(R) -2 Helix V 603-616/CC

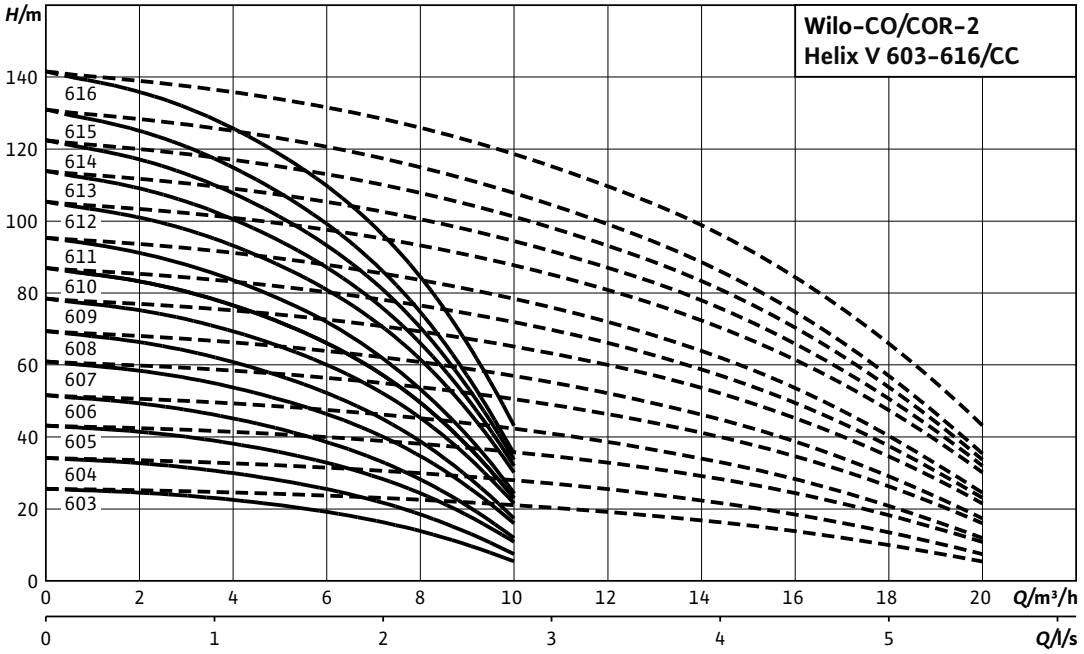

---- including standby pump

Motor data per pump

Wilo-Comfort CO(R)-2 Helix...	Nominal motor power	Nominal current 3~400 V, 50 Hz	Motor efficiency		
	P_2	I_N	$\eta_{m\ 50\%}$	$\eta_{m\ 75\%}$	$\eta_{m\ 100\%}$
	kW	A	%		
Helix V 603/K/CC	0.55	1.31	73.0	75.0	75.5
Helix V 604/K/CC	0.75	1.77	76.0	77.4	77.4
Helix V 605/K/CC	1.1	2.6	78.0	79.6	79.6
Helix V 606/K/CC	1.1	2.6	78.0	79.6	79.6
Helix V 607/K/CC	1.5	3.3	80.0	81.3	81.3
Helix V 608/K/CC	1.5	3.3	80.0	81.3	81.3
Helix V 609/K/CC	2.2	4.6	82.0	83.2	83.2
Helix V 610/K/CC	2.2	4.6	82.0	83.2	83.2
Helix V 611/K/CC	2.2	4.6	82.0	83.2	83.2
Helix V 612/K/CC	3	6.7	82.5	85.0	84.6
Helix V 613/K/CC	3	6.7	82.5	85.0	84.6
Helix V 614/K/CC	3	6.7	82.5	85.0	84.6
Helix V 615/K/CC	3	6.7	82.5	85.0	84.6
Helix V 616/K/CC	4	7.8	85.0	85.8	85.8

Motor efficiency based on 400 V, 50 Hz

Technical data Wilo-Comfort CO-/COR-Helix V.../CC

Dimension drawing

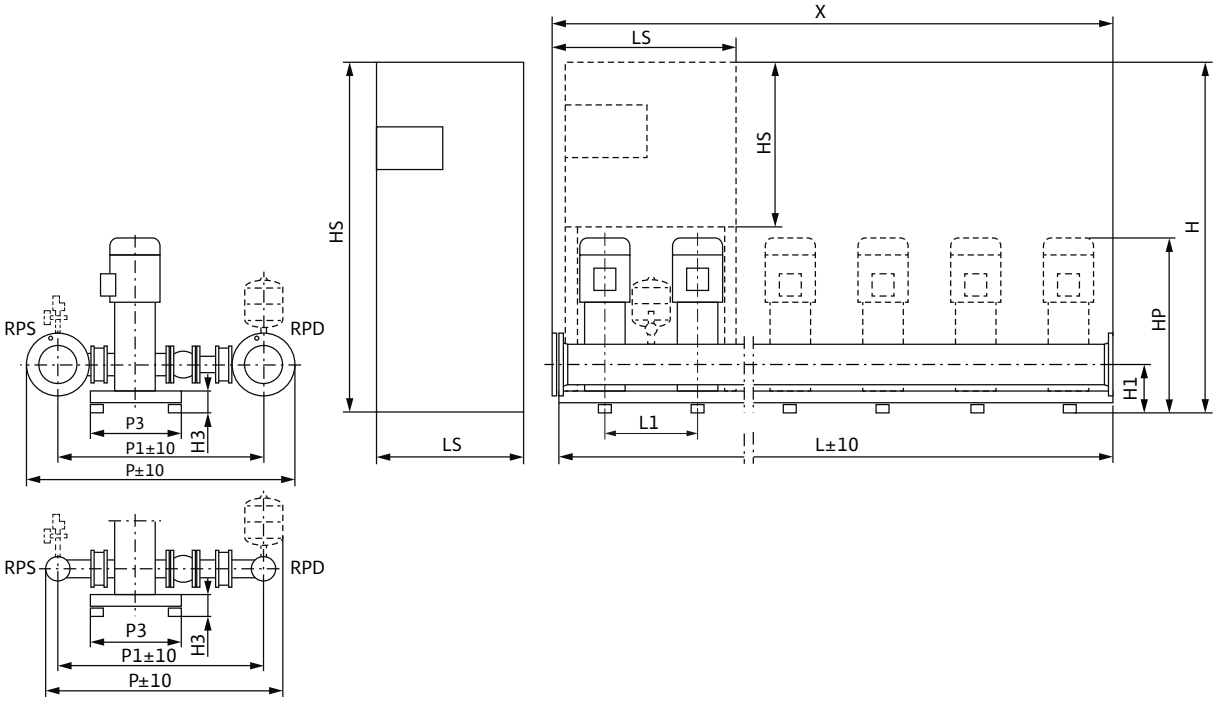

Sample systems are shown. Switchbox position depends on pump height.
Accessories (to be ordered separately): Optional WMS low-water cut-out switchgear kit
Installation surface: flat and horizontal
Installation location: dry, well ventilated and frost-proof

Dimensions, weights

Wilo-Comfort CO(R)-2 Helix...	Nominal diameters of the pipe connections on suction side	Nominal diameters of pipe connections on the pressure side	Dimensions																Weight approx.	
											CO	COR	CO	COR	CO	COR	CO	COR	CO	COR
	RPS	*RPD*	*H1*	*H3*	*HP*	*L1*	*P*	*P1*	*P3*	*X*	*H*		*HS*		*L*		*LS*		*m*	
			mm																kg	
Helix V 603/K/CC	R 2	R 2	140	90	748	300	756	623	300	600	1670	1870	600	760	600	600	600	600	127	140
Helix V 604/K/CC	R 2	R 2	140	90	805	300	756	623	300	600	1670	1870	600	760	600	600	600	600	133	146
Helix V 605/K/CC	R 2	R 2	140	90	843	300	756	623	300	600	1670	1870	600	760	600	600	600	600	137	150
Helix V 606/K/CC	R 2	R 2	140	90	880	300	756	623	300	600	1670	1870	600	760	600	600	600	600	139	152
Helix V 607/K/CC	R 2	R 2	140	90	950	300	756	623	300	600	1870	1870	600	760	600	600	600	600	149	162
Helix V 608/K/CC	R 2	R 2	140	90	988	300	756	623	300	600	1870	1870	600	760	600	600	600	600	151	164
Helix V 609/K/CC	R 2	R 2	140	90	1025	300	756	623	450	600	1870	1670	600	760	600	1200	600	600	157	174
Helix V 610/K/CC	R 2	R 2	140	90	1063	300	756	623	450	600	1870	1670	600	760	600	1200	600	600	159	206
Helix V 611/K/CC	R 2	R 2	140	90	1138	300	756	623	450	600	1670	1670	600	760	1200	1200	600	600	192	208
Helix V 612/K/CC	R 2	R 2	140	90	1178	300	756	623	450	600	1670	1670	600	760	1200	1200	600	600	200	217
Helix V 613/K/CC	R 2	R 2	140	90	1248	300	756	623	450	600	1670	1670	600	760	1200	1200	600	600	202	219
Helix V 614/K/CC	R 2	R 2	140	90	1248	300	756	623	450	600	1670	1670	600	760	1200	1200	600	600	204	221
Helix V 615/K/CC	R 2	R 2	140	90	1323	300	756	623	450	600	1670	1670	600	760	1200	1200	600	600	206	223
Helix V 616/K/CC	R 2	R 2	140	90	1367	300	756	623	450	600	1670	1670	600	760	1200	1200	600	600	228	245

Technical data Wilo-Comfort CO-/COR-Helix V.../CC

Pump curves

Wilo-Comfort CO(R) -3 Helix V 603-616/CC

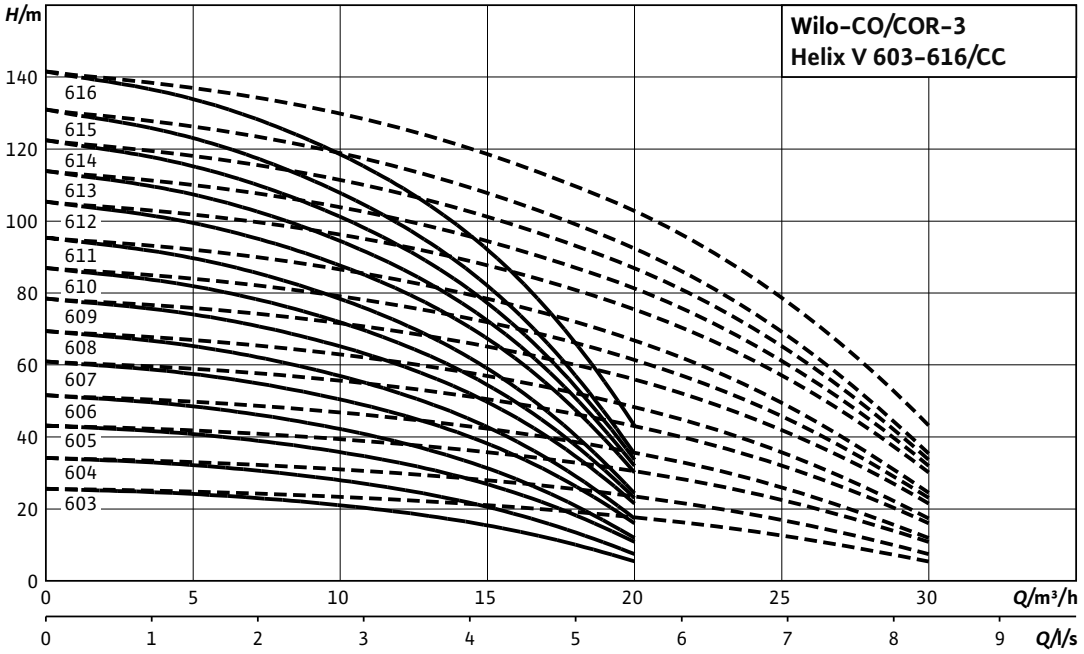

---- including standby pump

Motor data per pump

Wilo-Comfort CO(R)-3Helix...	Nominal motor power	Nominal current 3~400 V, 50 Hz	Motor efficiency		
	P_2	I_N	$\eta_{m\ 50\%}$	$\eta_{m\ 75\%}$	$\eta_{m\ 100\%}$
	kW	A	%		
Helix V 603/K/CC	0.55	1.31	73.0	75.0	75.5
Helix V 604/K/CC	0.75	1.77	76.0	77.4	77.4
Helix V 605/K/CC	1.1	2.6	78.0	79.6	79.6
Helix V 606/K/CC	1.1	2.6	78.0	79.6	79.6
Helix V 607/K/CC	1.5	3.3	80.0	81.3	81.3
Helix V 608/K/CC	1.5	3.3	80.0	81.3	81.3
Helix V 609/K/CC	2.2	4.6	82.0	83.2	83.2
Helix V 610/K/CC	2.2	4.6	82.0	83.2	83.2
Helix V 611/K/CC	2.2	4.6	82.0	83.2	83.2
Helix V 612/K/CC	3	6.7	82.5	85.0	84.6
Helix V 613/K/CC	3	6.7	82.5	85.0	84.6
Helix V 614/K/CC	3	6.7	82.5	85.0	84.6
Helix V 615/K/CC	3	6.7	82.5	85.0	84.6
Helix V 616/K/CC	4	7.8	85.0	85.8	85.8

Motor efficiency based on 400 V, 50 Hz

Technical data Wilo-Comfort CO-/COR-Helix V.../CC

Dimension drawing

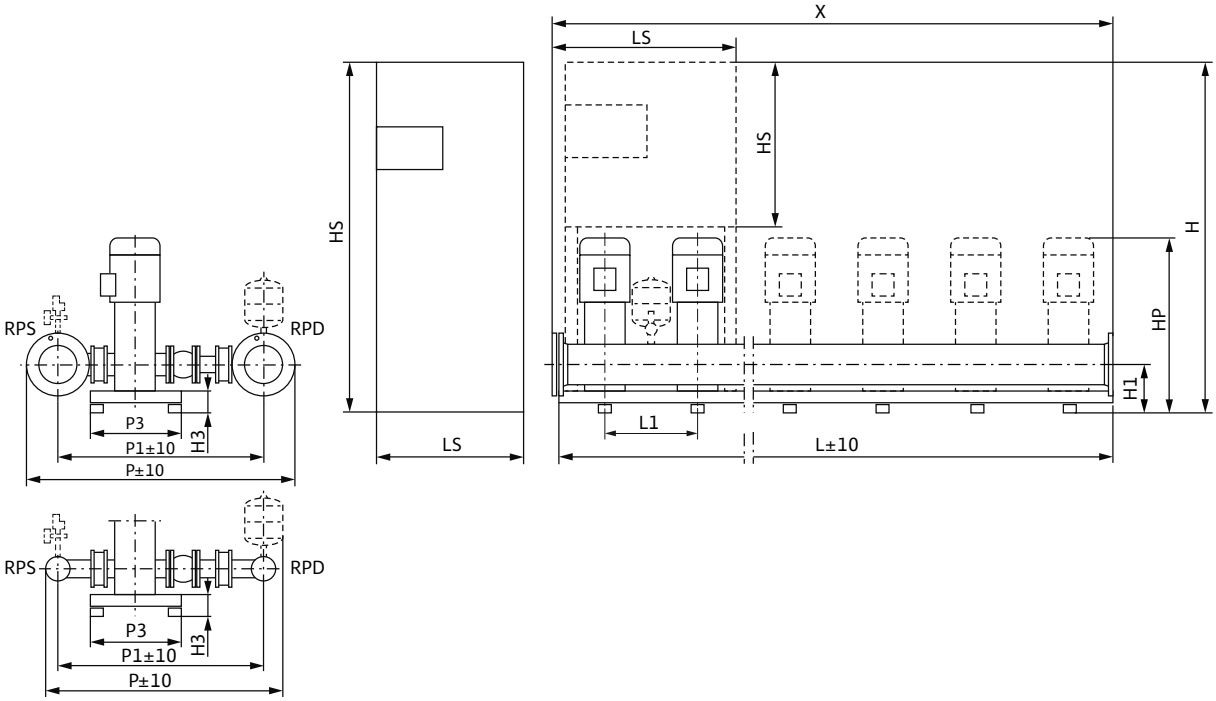

Sample systems are shown. Switchbox position depends on pump height.
Accessories (to be ordered separately): Optional WMS low-water cut-out switchgear kit
Installation surface: flat and horizontal
Installation location: dry, well ventilated and frost-proof

Dimensions, weights

Wilo-Comfort CO(R)-3Helix...	Nominal diameters of the pipe connections on suction side	Nominal diameters of pipe connections on the pressure side	Dimensions																Weight approx.	
											CO	COR	CO	COR	CO	COR	CO	COR	CO	COR
	RPS	*RPD*	*H1*	*H3*	*HP*	*L1*	*P*	*P1*	*P3*	*X*	*H*		*HS*		*L*		*LS*		*m*	
			mm																kg	
Helix V 603/K/CC	R 2½	R 2½	140	90	748	300	780	639	300	900	1670	1870	600	760	900	900	600	600	166	178
Helix V 604/K/CC	R 2½	R 2½	140	90	805	300	780	639	300	900	1670	1870	600	760	900	900	600	600	175	187
Helix V 605/K/CC	R 2½	R 2½	140	90	843	300	780	639	300	900	1670	1870	600	760	900	900	600	600	181	193
Helix V 606/K/CC	R 2½	R 2½	140	90	880	300	780	639	300	900	1670	1870	600	760	900	900	600	600	184	196
Helix V 607/K/CC	R 2½	R 2½	140	90	950	300	780	639	300	900	1870	1870	600	760	900	900	600	600	199	211
Helix V 608/K/CC	R 2½	R 2½	140	90	988	300	780	639	300	900	1870	1870	600	760	900	900	600	600	202	214
Helix V 609/K/CC	R 2½	R 2½	140	90	1025	300	780	639	470	900	1870	1670	600	760	900	1500	600	600	211	227
Helix V 610/K/CC	R 2½	R 2½	140	90	1063	300	780	639	470	900	1870	1670	600	760	900	1500	600	600	214	253
Helix V 611/K/CC	R 2½	R 2½	140	90	1138	300	780	639	470	900	1670	1670	600	760	1500	1500	600	600	241	256
Helix V 612/K/CC	R 2½	R 2½	140	90	1178	300	780	639	470	900	1670	1670	600	760	1500	1500	600	600	253	268
Helix V 613/K/CC	R 2½	R 2½	140	90	1248	300	780	639	470	900	1670	1670	600	760	1500	1500	600	600	256	271
Helix V 614/K/CC	R 2½	R 2½	140	90	1248	300	780	639	470	900	1670	1670	600	760	1500	1500	600	600	259	274
Helix V 615/K/CC	R 2½	R 2½	140	90	1323	300	780	639	470	900	1670	1670	600	760	1500	1500	600	600	262	277
Helix V 616/K/CC	R 2½	R 2½	140	90	1367	300	780	639	470	900	1670	1670	600	760	1500	1500	600	600	295	310

Technical data Wilo-Comfort CO-/COR-Helix V.../CC

Pump curves

Wilo-Comfort CO(R) -4 Helix V 603-616/CC

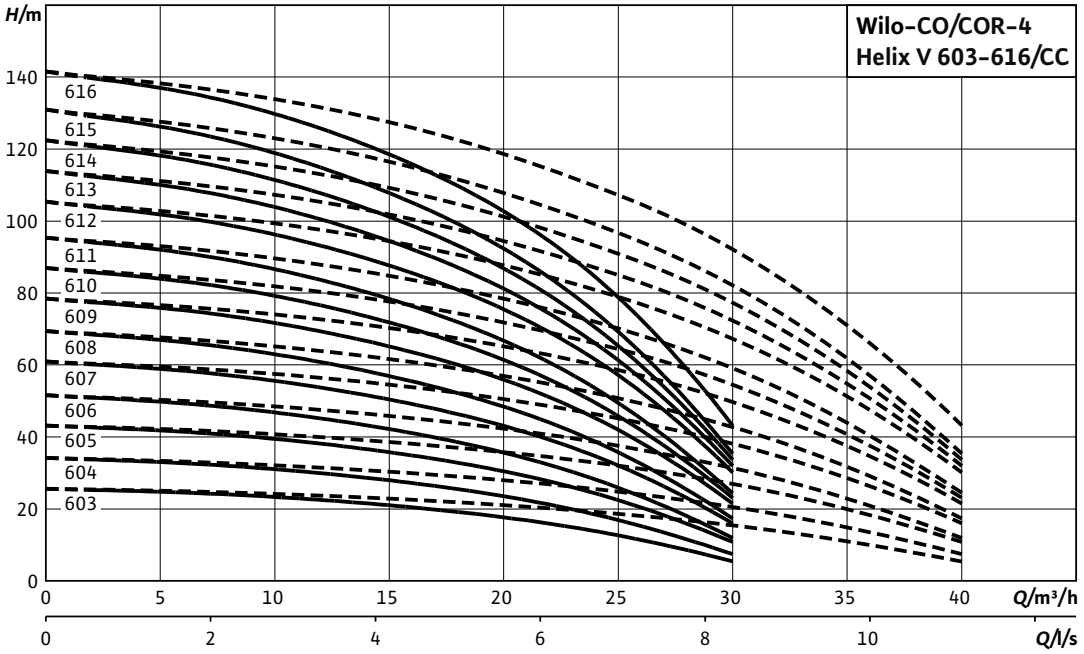

---- including standby pump

Motor data per pump

Wilo-Comfort CO(R)-4Helix...	Nominal motor power	Nominal current 3~400 V, 50 Hz	Motor efficiency		
	P_2	I_N	$\eta_{m\ 50\%}$	$\eta_{m\ 75\%}$	$\eta_{m\ 100\%}$
	kW	A	%		
Helix V 603/K/CC	0.55	1.31	73.0	75.0	75.5
Helix V 604/K/CC	0.75	1.77	76.0	77.4	77.4
Helix V 605/K/CC	1.1	2.6	78.0	79.6	79.6
Helix V 606/K/CC	1.1	2.6	78.0	79.6	79.6
Helix V 607/K/CC	1.5	3.3	80.0	81.3	81.3
Helix V 608/K/CC	1.5	3.3	80.0	81.3	81.3
Helix V 609/K/CC	2.2	4.6	82.0	83.2	83.2
Helix V 610/K/CC	2.2	4.6	82.0	83.2	83.2
Helix V 611/K/CC	2.2	4.6	82.0	83.2	83.2
Helix V 612/K/CC	3	6.7	82.5	85.0	84.6
Helix V 613/K/CC	3	6.7	82.5	85.0	84.6
Helix V 614/K/CC	3	6.7	82.5	85.0	84.6
Helix V 615/K/CC	3	6.7	82.5	85.0	84.6
Helix V 616/K/CC	4	7.8	85.0	85.8	85.8

Motor efficiency based on 400 V, 50 Hz

Technical data Wilo-Comfort CO-/COR-Helix V.../CC

Dimension drawing

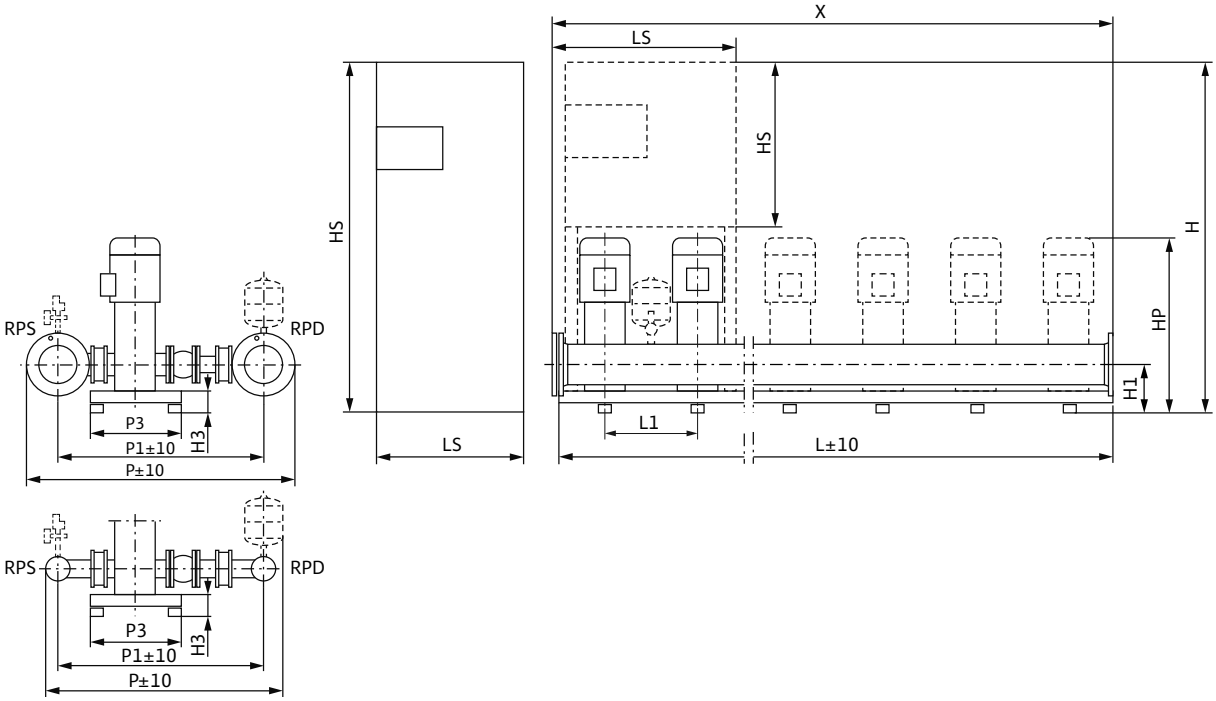

Sample systems are shown. Switchbox position depends on pump height.
Accessories (to be ordered separately): Optional WMS low-water cut-out switchgear kit
Installation surface: flat and horizontal
Installation location: dry, well ventilated and frost-proof

Dimensions, weights

Wilo-Comfort CO(R)-4Helix...	Nominal diameters of the pipe connections on suction side	Nominal diameters of pipe connections on the pressure side	Dimensions																Weight approx.	
											CO	COR	CO	COR	CO	COR	CO	COR	CO	COR
	RPS	*RPD*	*H1*	*H3*	*HP*	*L1*	*P*	*P1*	*P3*	*X*	*H*		*HS*		*L*		*LS*		*m*	
			mm																kg	
Helix V 603/K/CC	R 2½	R 2½	140	90	748	300	780	639	300	1200	1670	1870	600	760	1200	1200	600	600	205	217
Helix V 604/K/CC	R 2½	R 2½	140	90	805	300	780	639	300	1200	1670	1870	600	760	1200	1200	600	600	217	229
Helix V 605/K/CC	R 2½	R 2½	140	90	843	300	780	639	300	1200	1670	1870	600	760	1200	1200	600	600	225	237
Helix V 606/K/CC	R 2½	R 2½	140	90	880	300	780	639	300	1200	1670	1870	600	760	1200	1200	600	600	229	241
Helix V 607/K/CC	R 2½	R 2½	140	90	950	300	780	639	300	1200	1870	1870	600	760	1200	1200	600	600	249	261
Helix V 608/K/CC	R 2½	R 2½	140	90	988	300	780	639	300	1200	1870	1870	600	760	1200	1200	600	600	253	265
Helix V 609/K/CC	R 2½	R 2½	140	90	1025	300	780	639	470	1200	1870	1670	600	760	1200	1800	600	600	265	280
Helix V 610/K/CC	R 2½	R 2½	140	90	1063	300	780	639	470	1200	1870	1670	600	760	1200	1800	600	600	269	311
Helix V 611/K/CC	R 2½	R 2½	140	90	1138	300	780	639	470	1200	1670	1670	600	760	1800	1800	600	600	300	315
Helix V 612/K/CC	R 2½	R 2½	140	90	1173	300	780	639	470	1200	1670	1670	600	760	1800	1800	600	600	316	331
Helix V 613/K/CC	R 2½	R 2½	140	90	1248	300	780	639	470	1200	1670	1670	600	760	1800	1800	600	600	320	335
Helix V 614/K/CC	R 2½	R 2½	140	90	1248	300	780	639	470	1200	1670	1670	600	760	1800	1800	600	600	324	339
Helix V 615/K/CC	R 2½	R 2½	140	90	1323	300	780	639	470	1200	1670	1670	600	760	1800	1800	600	600	328	343
Helix V 616/K/CC	R 2½	R 2½	140	90	1367	300	780	639	470	1200	1670	1670	600	760	1800	1800	600	600	372	387

Technical data Wilo-Comfort CO-/COR-Helix V.../CC

Pump curves

Wilo-Comfort CO(R) -5 Helix V 603-616/CC

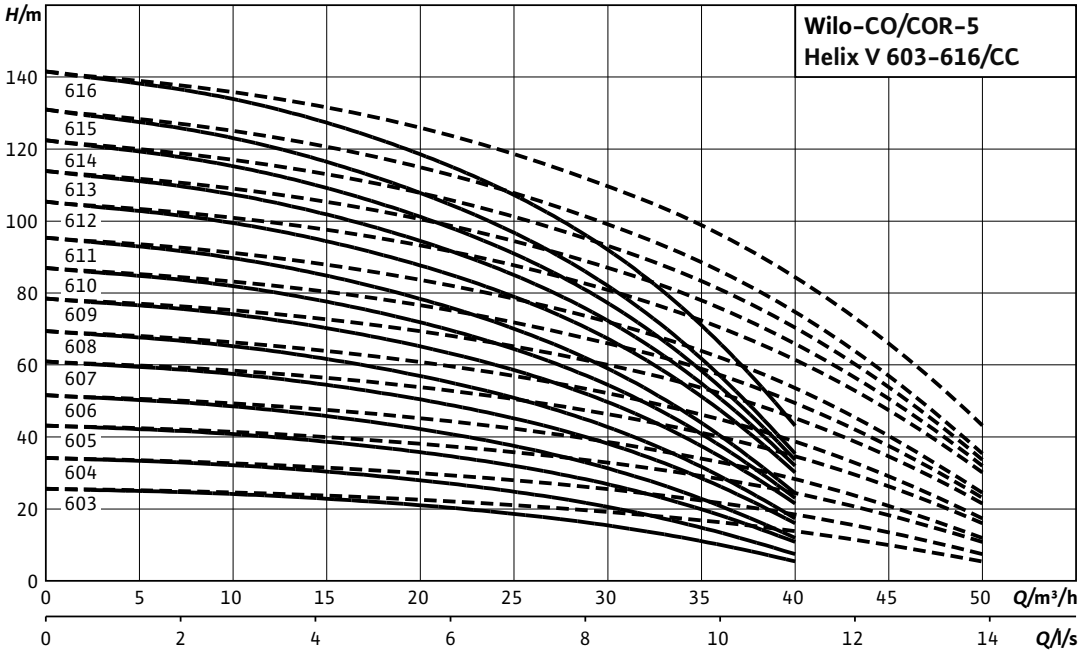

---- including standby pump

Motor data per pump

Wilo-Comfort CO(R)-5Helix...	Nominal motor power	Nominal current 3~400 V, 50 Hz	Motor efficiency		
	P_2	I_N	$\eta_{m\ 50\%}$	$\eta_{m\ 75\%}$	$\eta_{m\ 100\%}$
	kW	A	%		
Helix V 603/K/CC	0.55	1.31	73.0	75.0	75.5
Helix V 604/K/CC	0.75	1.77	76.0	77.4	77.4
Helix V 605/K/CC	1.1	2.6	78.0	79.6	79.6
Helix V 606/K/CC	1.1	2.6	78.0	79.6	79.6
Helix V 607/K/CC	1.5	3.3	80.0	81.3	81.3
Helix V 608/K/CC	1.5	3.3	80.0	81.3	81.3
Helix V 609/K/CC	2.2	4.6	82.0	83.2	83.2
Helix V 610/K/CC	2.2	4.6	82.0	83.2	83.2
Helix V 611/K/CC	2.2	4.6	82.0	83.2	83.2
Helix V 612/K/CC	3	6.7	82.5	85.0	84.6
Helix V 613/K/CC	3	6.7	82.5	85.0	84.6
Helix V 614/K/CC	3	6.7	82.5	85.0	84.6
Helix V 615/K/CC	3	6.7	82.5	85.0	84.6
Helix V 616/K/CC	4	7.8	85.0	85.8	85.8

Motor efficiency based on 400 V, 50 Hz

Technical data Wilo-Comfort CO-/COR-Helix V.../CC

Dimension drawing

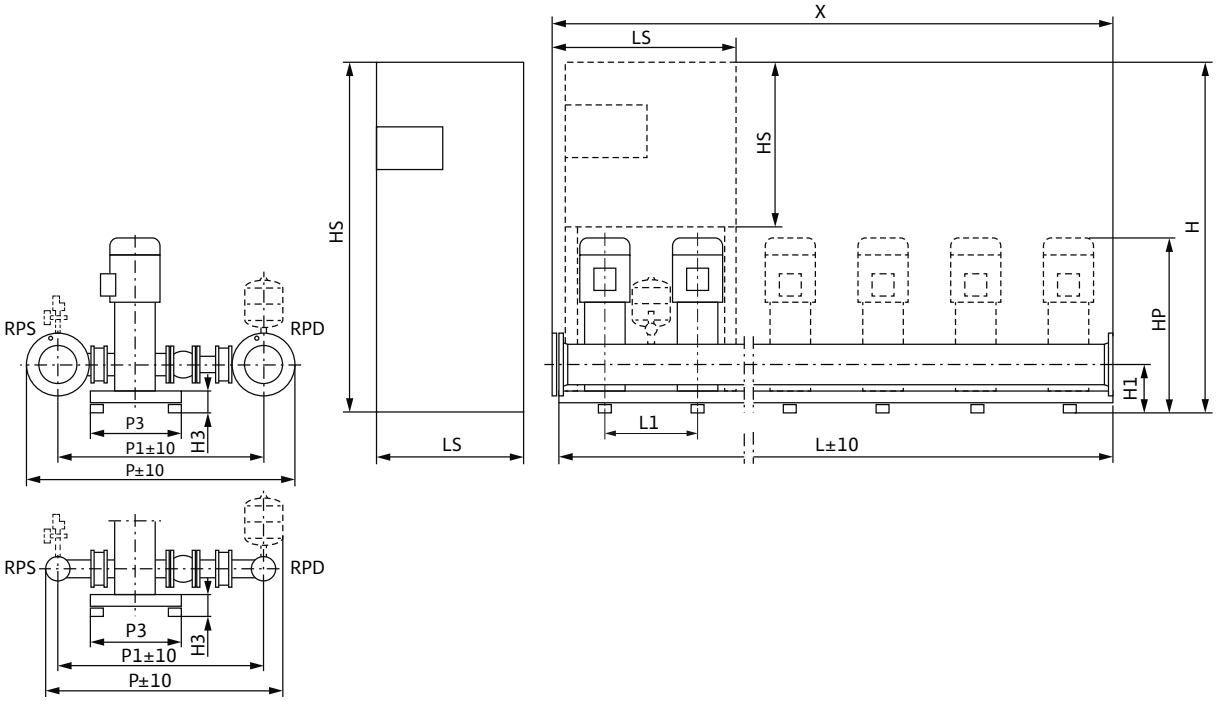

Sample systems are shown. Switchbox position depends on pump height.
Accessories (to be ordered separately): Optional WMS low-water cut-out switchgear kit
Installation surface: flat and horizontal
Installation location: dry, well ventilated and frost-proof

Dimensions, weights

Wilo-Comfort CO(R)-5Helix...	Nominal diameters of the pipe connections on suction side	Nominal diameters of pipe connections on the pressure side	Dimensions																Weight approx.	
											CO	COR	CO	COR	CO	COR	CO	COR	CO	COR
	RPS	*RPD*	*H1*	*H3*	*HP*	*L1*	*P*	*P1*	*P3*	*X*	*H*		*HS*		*L*		*LS*		*m*	
			mm																kg	
Helix V 603/K/CC	R 3	R 3	140	90	748	300	798	650	300	1500	1670	1870	600	760	1500	1500	600	760	248	268
Helix V 604/K/CC	R 3	R 3	140	90	805	300	798	650	300	1500	1670	1870	600	760	1500	1500	600	760	263	283
Helix V 605/K/CC	R 3	R 3	140	90	843	300	798	650	300	1500	1670	1870	600	760	1500	1500	600	760	273	293
Helix V 606/K/CC	R 3	R 3	140	90	880	300	798	650	300	1500	1670	1870	600	760	1500	1500	600	760	278	298
Helix V 607/K/CC	R 3	R 3	140	90	950	300	798	650	300	1500	1870	1870	600	760	1500	1500	600	760	303	323
Helix V 608/K/CC	R 3	R 3	140	90	988	300	798	650	300	1500	1870	1870	600	760	1500	1500	600	760	308	328
Helix V 609/K/CC	R 3	R 3	140	90	1025	300	798	650	470	1500	1870	1670	600	760	1500	2300	600	760	323	348
Helix V 610/K/CC	R 3	R 3	140	90	1063	300	798	650	470	1500	1870	1670	600	760	1500	2300	600	760	328	383
Helix V 611/K/CC	R 3	R 3	140	90	1138	300	798	650	470	1500	1670	1670	600	760	2300	2300	600	760	363	388
Helix V 612/K/CC	R 3	R 3	140	90	1178	300	798	650	470	1500	1670	1670	600	760	2300	2300	600	760	384	409
Helix V 613/K/CC	R 3	R 3	140	90	1248	300	798	650	470	1500	1670	1670	600	760	2300	2300	600	760	389	414
Helix V 614/K/CC	R 3	R 3	140	90	1248	300	798	650	470	1500	1670	1670	600	760	2300	2300	600	760	394	419
Helix V 615/K/CC	R 3	R 3	140	90	1323	300	798	650	470	1500	1670	1670	600	760	2300	2300	600	760	399	424
Helix V 616/K/CC	R 3	R 3	140	90	1367	300	798	650	470	1500	1670	1670	600	760	2300	2300	600	760	455	479

Technical data Wilo-Comfort CO-/COR-Helix V.../CC

Pump curves

Wilo-Comfort CO(R) -6 Helix V 603-616/CC

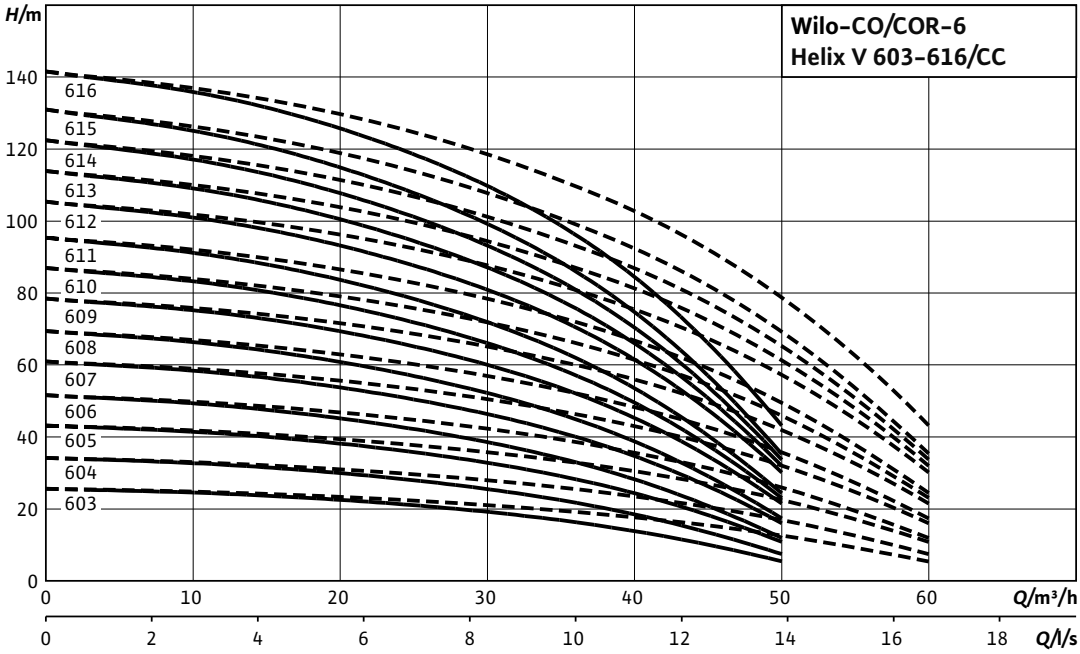

---- including standby pump

Motor data per pump

Wilo-Comfort CO(R)-6Helix...	Nominal motor power	Nominal current 3~400 V, 50 Hz	Motor efficiency		
	P_2	I_N	$\eta_{m\ 50\%}$	$\eta_{m\ 75\%}$	$\eta_{m\ 100\%}$
	kW	A	%		
Helix V 603/K/CC	0.55	1.31	73.0	75.0	75.5
Helix V 604/K/CC	0.75	1.77	76.0	77.4	77.4
Helix V 605/K/CC	1.1	2.6	78.0	79.6	79.6
Helix V 606/K/CC	1.1	2.6	78.0	79.6	79.6
Helix V 607/K/CC	1.5	3.3	80.0	81.3	81.3
Helix V 608/K/CC	1.5	3.3	80.0	81.3	81.3
Helix V 609/K/CC	2.2	4.6	82.0	83.2	83.2
Helix V 610/K/CC	2.2	4.6	82.0	83.2	83.2
Helix V 611/K/CC	2.2	4.6	82.0	83.2	83.2
Helix V 612/K/CC	3	6.7	82.5	85.0	84.6
Helix V 613/K/CC	3	6.7	82.5	85.0	84.6
Helix V 614/K/CC	3	6.7	82.5	85.0	84.6
Helix V 615/K/CC	3	6.7	82.5	85.0	84.6
Helix V 616/K/CC	4	7.8	85.0	85.8	85.8

Motor efficiency based on 400 V, 50 Hz

Technical data Wilo-Comfort CO-/COR-Helix V.../CC

Dimension drawing

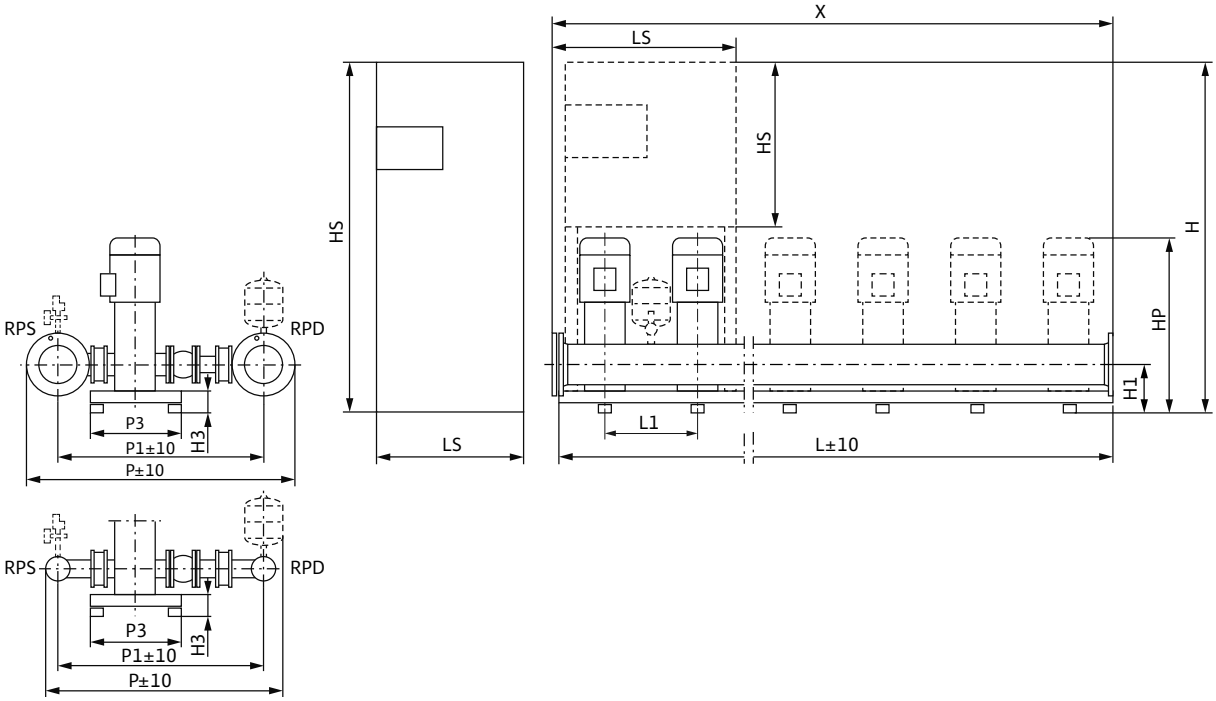

Sample systems are shown. Switchbox position depends on pump height.
Accessories (to be ordered separately): Optional WMS low-water cut-out switchgear kit
Installation surface: flat and horizontal
Installation location: dry, well ventilated and frost-proof

Dimensions, weights

Wilo-Comfort CO(R)-6Helix...	Nominal diameters of the pipe connections on suction side	Nominal diameters of pipe connections on the pressure side	Dimensions																Weight approx.	
											CO	COR	CO	COR	CO	COR	CO	COR	CO	COR
	RPS	*RPD*	*H1*	*H3*	*HP*	*L1*	*P*	*P1*	*P3*	*X*	*H*		*HS*		*L*		*LS*		*m*	
			mm																kg	
Helix V 603/K/CC	R 3	R 3	140	90	748	300	798	650	300	1800	1670	1870	600	760	1800	1800	600	760	285	306
Helix V 604/K/CC	R 3	R 3	140	90	805	300	798	650	300	1800	1670	1870	600	760	1800	1800	600	760	303	324
Helix V 605/K/CC	R 3	R 3	140	90	843	300	798	650	300	1800	1670	1870	600	760	1800	1800	600	760	315	336
Helix V 606/K/CC	R 3	R 3	140	90	880	300	798	650	300	1800	1670	1870	600	760	1800	1800	600	760	321	342
Helix V 607/K/CC	R 3	R 3	140	90	950	300	798	650	300	1800	1870	1870	600	760	1800	1800	600	760	351	372
Helix V 608/K/CC	R 3	R 3	140	90	988	300	798	650	300	1800	1870	1870	600	760	1800	1800	600	760	357	378
Helix V 609/K/CC	R 3	R 3	140	90	1025	300	798	650	470	1800	1870	1670	600	760	1800	2600	600	760	375	401
Helix V 610/K/CC	R 3	R 3	140	90	1063	300	798	650	470	1800	1870	1670	600	760	1800	2600	600	760	381	441
Helix V 611/K/CC	R 3	R 3	140	90	1138	300	798	650	470	1800	1670	1670	600	760	2600	2600	600	760	421	447
Helix V 612/K/CC	R 3	R 3	140	90	1178	300	798	650	470	1800	1670	1670	600	760	2600	2600	600	760	446	472
Helix V 613/K/CC	R 3	R 3	140	90	1248	300	798	650	470	1800	1670	1670	600	760	2600	2600	600	760	452	478
Helix V 614/K/CC	R 3	R 3	140	90	1248	300	798	650	470	1800	1670	1670	600	760	2600	2600	600	760	458	484
Helix V 615/K/CC	R 3	R 3	140	90	1323	300	798	650	470	1800	1670	1670	600	760	2600	2600	600	760	464	490
Helix V 616/K/CC	R 3	R 3	140	90	1367	300	798	650	470	1800	1670	1670	600	760	2600	2600	600	760	530	557

Technical data Wilo-Comfort CO-/COR-Helix V.../CC

Pump curves

Wilo-Comfort CO(R) -2 Helix V 1002-1015/CC

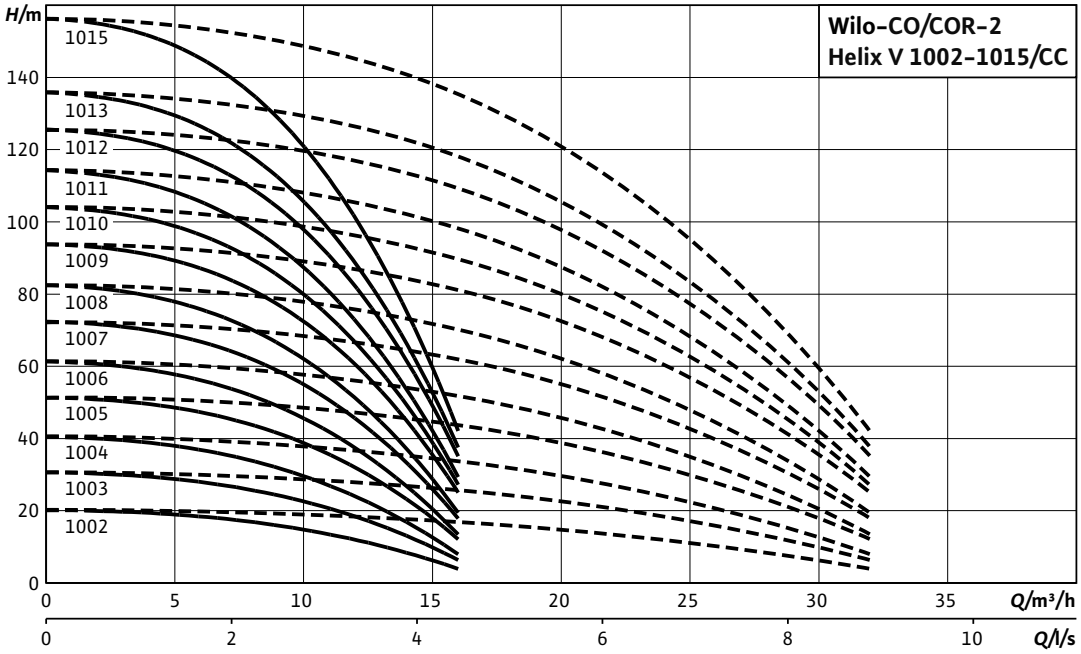

---- including standby pump

Motor data per pump

Wilo-Comfort CO(R)-2 Helix...	Nominal motor power	Nominal current 3~400 V, 50 Hz	Motor efficiency		
	P_2	I_N	$\eta_{m\ 50\%}$	$\eta_{m\ 75\%}$	$\eta_{m\ 100\%}$
	kW	A	%		
Helix V 1002/K/CC	0.75	1.77	76.0	77.4	77.4
Helix V 1003/K/CC	1.1	2.6	78.0	79.6	79.6
Helix V 1004/K/CC	1.5	3.3	80.0	81.3	81.3
Helix V 1005/K/CC	2.2	4.6	82.0	83.2	83.2
Helix V 1006/K/CC	2.2	4.6	82.0	83.2	83.2
Helix V 1007/K/CC	3	6.7	82.5	85.0	84.6
Helix V 1008/K/CC	3	6.7	82.5	85.0	84.6
Helix V 1009/K/CC	4	7.8	85.0	85.8	85.8
Helix V 1010/K/CC	4	7.8	85.0	85.8	85.8
Helix V 1011/K/CC	4	7.8	85.0	85.8	85.8
Helix V 1012/K/CC	5.5	10.7	85.2	86.9	88.1
Helix V 1013/K/CC	5.5	10.7	85.2	86.9	88.1
Helix V 1015/K/CC	5.5	10.7	85.2	86.9	88.1

Motor efficiency based on 400 V, 50 Hz

Technical data Wilo-Comfort CO-/COR-Helix V.../CC

Dimension drawing

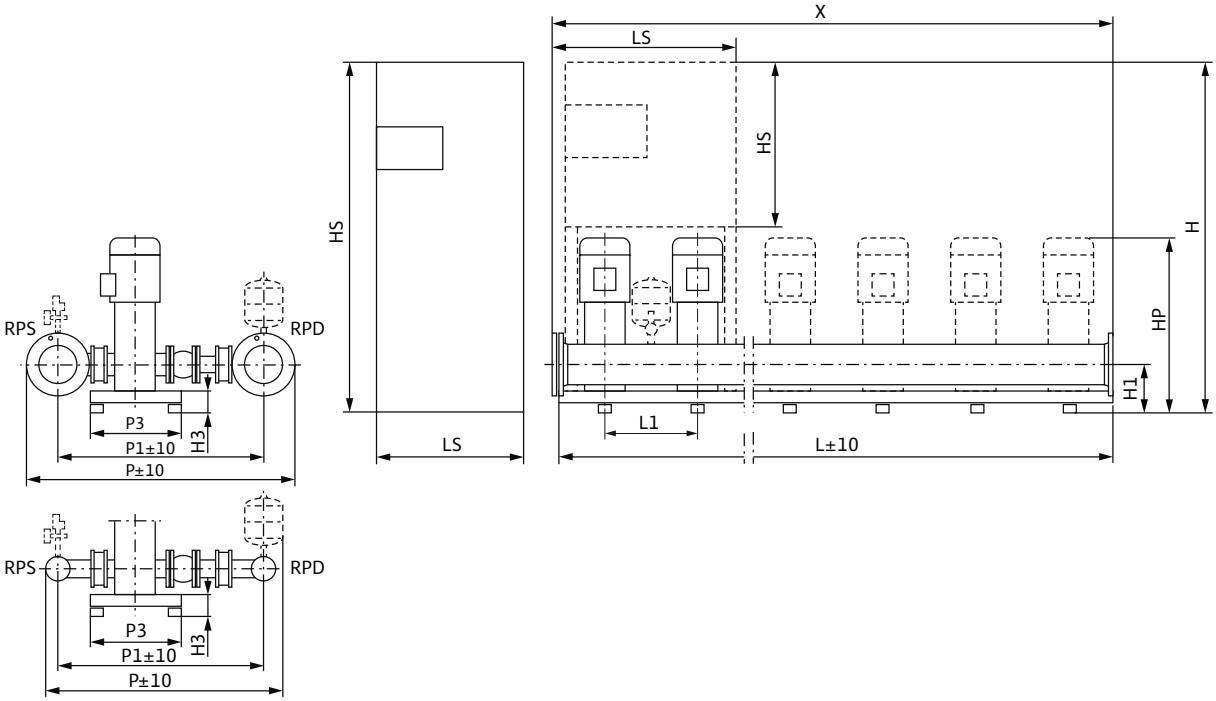

Sample systems are shown. Switchbox position depends on pump height.
Accessories (to be ordered separately): Optional WMS low-water cut-out switchgear kit
Installation surface: flat and horizontal
Installation location: dry, well ventilated and frost-proof

Dimensions, weights

Wilo-Comfort CO(R)-2 Helix...	Nominal diameters of the pipe connections on suction side	Nominal diameters of pipe connections on the pressure side	Dimensions																Weight approx.	
											CO	COR	CO	COR	CO	COR	CO	COR	CO	COR
	RPS	*RPD*	*H1*	*H3*	*HP*	*L1*	*P*	*P1*	*P3*	*X*	*H*		*HS*		*L*		*LS*		*m*	
			mm																kg	
Helix V 1002/K/CC	R 2½	R 2½	185	105	766	300	895	754	450	600	1685	1885	600	760	600	600	600	600	150	163
Helix V 1003/K/CC	R 2½	R 2½	185	105	804	300	895	754	450	600	1685	1885	600	760	600	600	600	600	154	167
Helix V 1004/K/CC	R 2½	R 2½	185	105	874	300	895	754	450	600	1685	1885	600	760	600	600	600	600	166	179
Helix V 1005/K/CC	R 2½	R 2½	185	105	911	300	895	754	450	600	1885	1885	600	760	600	600	600	600	172	188
Helix V 1006/K/CC	R 2½	R 2½	185	105	949	300	895	754	450	600	1885	1885	600	760	600	600	600	600	174	190
Helix V 1007/K/CC	R 2½	R 2½	185	105	1022	300	895	754	450	600	1885	1685	600	760	600	1200	600	600	182	220
Helix V 1008/K/CC	R 2½	R 2½	185	105	1059	300	895	754	450	600	1885	1685	600	760	600	1200	600	600	184	222
Helix V 1009/K/CC	R 2½	R 2½	185	105	1140	300	895	754	450	600	1685	1685	600	760	1200	1200	600	600	229	246
Helix V 1010/K/CC	R 2½	R 2½	185	105	1178	300	895	754	450	600	1685	1685	600	760	1200	1200	600	600	231	248
Helix V 1011/K/CC	R 2½	R 2½	185	105	1253	300	895	754	450	600	1685	1685	600	760	1200	1200	600	600	233	250
Helix V 1012/K/CC	R 2½	R 2½	185	105	1245	300	895	754	450	600	1885	1900	760	1900	1200	600	600	600	258	352
Helix V 1013/K/CC	R 2½	R 2½	185	105	1320	300	895	754	450	600	1885	1900	760	1900	1200	600	600	600	260	354
Helix V 1015/K/CC	R 2½	R 2½	185	105	1395	300	895	754	450	600	1885	1900	760	1900	1200	600	600	600	264	358

Technical data Wilo-Comfort CO-/COR-Helix V.../CC

Pump curves

Wilo-Comfort CO(R) -3 Helix V 1002-1015/CC

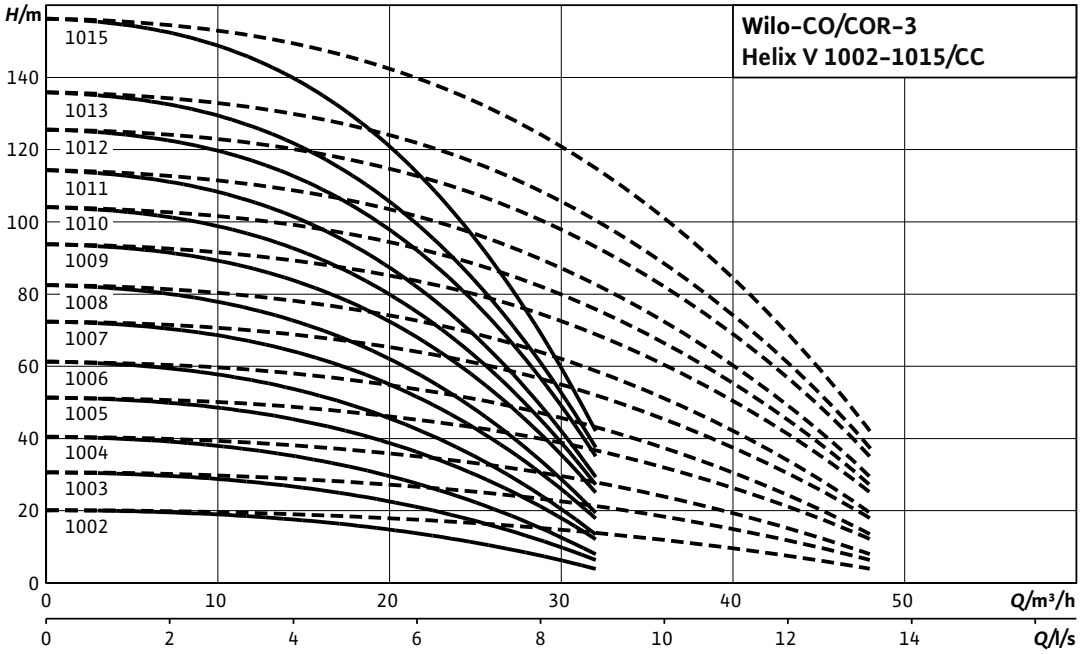

---- including standby pump

Motor data per pump

Wilo-Comfort CO(R)-3Helix...	Nominal motor power	Nominal current 3~400 V, 50 Hz	Motor efficiency		
	P_2	I_N	$\eta_{m\ 50\%}$	$\eta_{m\ 75\%}$	$\eta_{m\ 100\%}$
	kW	A	%		
Helix V 1002/K/CC	0.75	1.77	76.0	77.4	77.4
Helix V 1003/K/CC	1.1	2.6	78.0	79.6	79.6
Helix V 1004/K/CC	1.5	3.3	80.0	81.3	81.3
Helix V 1005/K/CC	2.2	4.6	82.0	83.2	83.2
Helix V 1006/K/CC	2.2	4.6	82.0	83.2	83.2
Helix V 1007/K/CC	3	6.7	82.5	85.0	84.6
Helix V 1008/K/CC	3	6.7	82.5	85.0	84.6
Helix V 1009/K/CC	4	7.8	85.0	85.8	85.8
Helix V 1010/K/CC	4	7.8	85.0	85.8	85.8
Helix V 1011/K/CC	4	7.8	85.0	85.8	85.8
Helix V 1012/K/CC	5.5	10.7	85.2	86.9	88.1
Helix V 1013/K/CC	5.5	10.7	85.2	86.9	88.1
Helix V 1015/K/CC	5.5	10.7	85.2	86.9	88.1

Motor efficiency based on 400 V, 50 Hz

Technical data Wilo-Comfort CO-/COR-Helix V.../CC

Dimension drawing

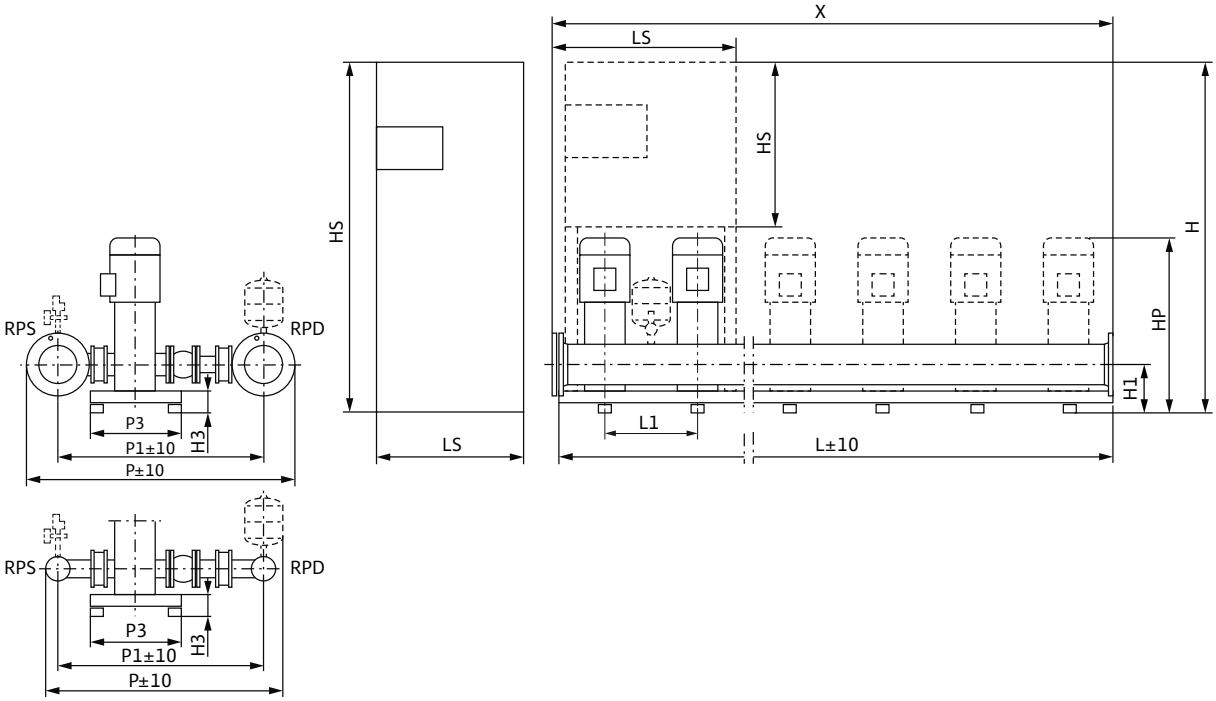

Sample systems are shown. Switchbox position depends on pump height.
Accessories (to be ordered separately): Optional WMS low-water cut-out switchgear kit
Installation surface: flat and horizontal
Installation location: dry, well ventilated and frost-proof

Dimensions, weights

Wilo-Comfort CO(R)-3Helix...	Nominal diameters of the pipe connections on suction side	Nominal diameters of pipe connections on the pressure side	Dimensions																Weight approx.	
											CO	COR	CO	COR	CO	COR	CO	COR	CO	COR
	RPS	*RPD*	*H1*	*H3*	*HP*	*L1*	*P*	*P1*	*P3*	*X*	*H*		*HS*		*L*		*LS*		*m*	
			mm																kg	
Helix V 1002/K/CC	R 2½	R 2½	185	105	766	300	895	754	450	900	1685	1885	600	760	900	900	600	600	203	215
Helix V 1003/K/CC	R 2½	R 2½	185	105	804	300	895	754	450	900	1685	1885	600	760	900	900	600	600	209	221
Helix V 1004/K/CC	R 2½	R 2½	185	105	874	300	895	754	450	900	1685	1885	600	760	900	900	600	600	227	239
Helix V 1005/K/CC	R 2½	R 2½	185	105	911	300	895	754	450	900	1885	1885	600	760	900	900	600	600	236	251
Helix V 1006/K/CC	R 2½	R 2½	185	105	949	300	895	754	450	900	1885	1885	600	760	900	900	600	600	239	254
Helix V 1007/K/CC	R 2½	R 2½	185	105	1022	300	895	754	470	900	1885	1685	600	760	900	1500	600	600	251	274
Helix V 1008/K/CC	R 2½	R 2½	185	105	1059	300	895	754	470	900	1885	1685	600	760	900	1500	600	600	254	277
Helix V 1009/K/CC	R 2½	R 2½	185	105	1140	300	895	754	470	900	1685	1685	600	760	1500	1500	600	600	298	313
Helix V 1010/K/CC	R 2½	R 2½	185	105	1178	300	895	754	470	900	1685	1685	600	760	1500	1500	600	600	301	316
Helix V 1011/K/CC	R 2½	R 2½	185	105	1253	300	895	754	470	900	1685	1685	600	760	1500	1500	600	600	304	319
Helix V 1012/K/CC	R 2½	R 2½	185	105	1245	300	895	754	450	900	1885	1900	760	1900	1500	900	600	800	337	466
Helix V 1013/K/CC	R 2½	R 2½	185	105	1320	300	895	754	450	900	1885	1900	760	1900	1500	900	600	800	340	469
Helix V 1015/K/CC	R 2½	R 2½	185	105	1395	300	895	754	450	900	1885	1900	760	1900	1500	900	600	800	346	475

Technical data Wilo-Comfort CO-/COR-Helix V.../CC

Pump curves

Wilo-Comfort CO(R) -4 Helix V 1002-1015/CC

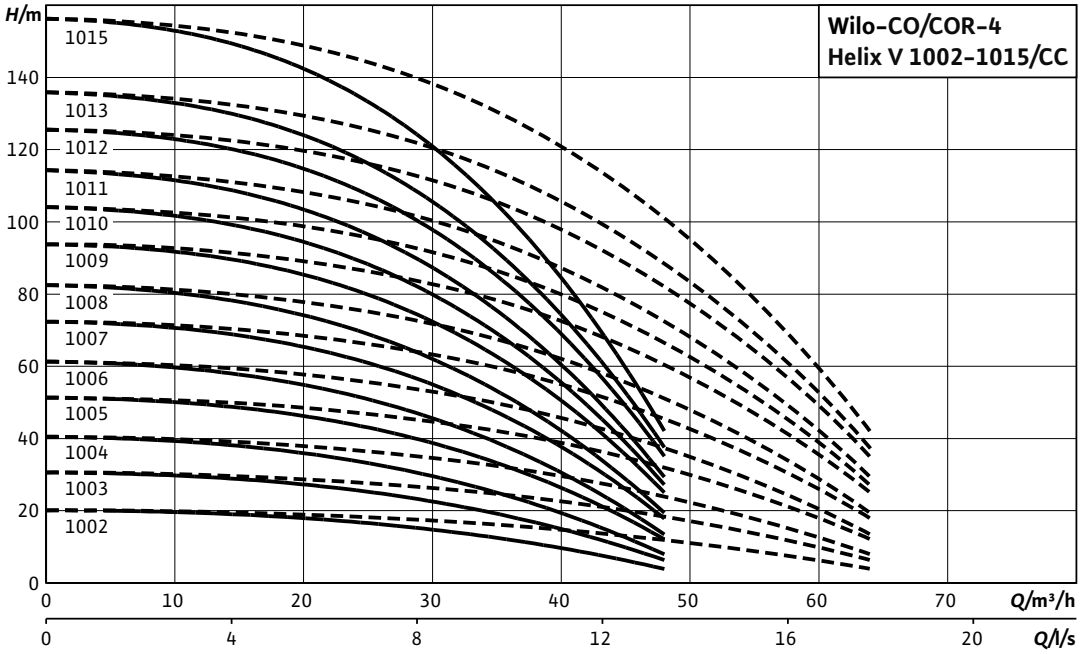

---- including standby pump

Motor data per pump

Wilo-Comfort CO(R)-4Helix...	Nominal motor power	Nominal current 3~400 V, 50 Hz	Motor efficiency		
	P_2	I_N	$\eta_{m\ 50\%}$	$\eta_{m\ 75\%}$	$\eta_{m\ 100\%}$
	kW	A	%		
Helix V 1002/K/CC	0.75	1.77	76.0	77.4	77.4
Helix V 1003/K/CC	1.1	2.6	78.0	79.6	79.6
Helix V 1004/K/CC	1.5	3.3	80.0	81.3	81.3
Helix V 1005/K/CC	2.2	4.6	82.0	83.2	83.2
Helix V 1006/K/CC	2.2	4.6	82.0	83.2	83.2
Helix V 1007/K/CC	3	6.7	82.5	85.0	84.6
Helix V 1008/K/CC	3	6.7	82.5	85.0	84.6
Helix V 1009/K/CC	4	7.8	85.0	85.8	85.8
Helix V 1010/K/CC	4	7.8	85.0	85.8	85.8
Helix V 1011/K/CC	4	7.8	85.0	85.8	85.8
Helix V 1012/K/CC	5.5	10.7	85.2	86.9	88.1
Helix V 1013/K/CC	5.5	10.7	85.2	86.9	88.1
Helix V 1015/K/CC	5.5	10.7	85.2	86.9	88.1

Motor efficiency based on 400 V, 50 Hz

Technical data Wilo-Comfort CO-/COR-Helix V.../CC

Dimension drawing

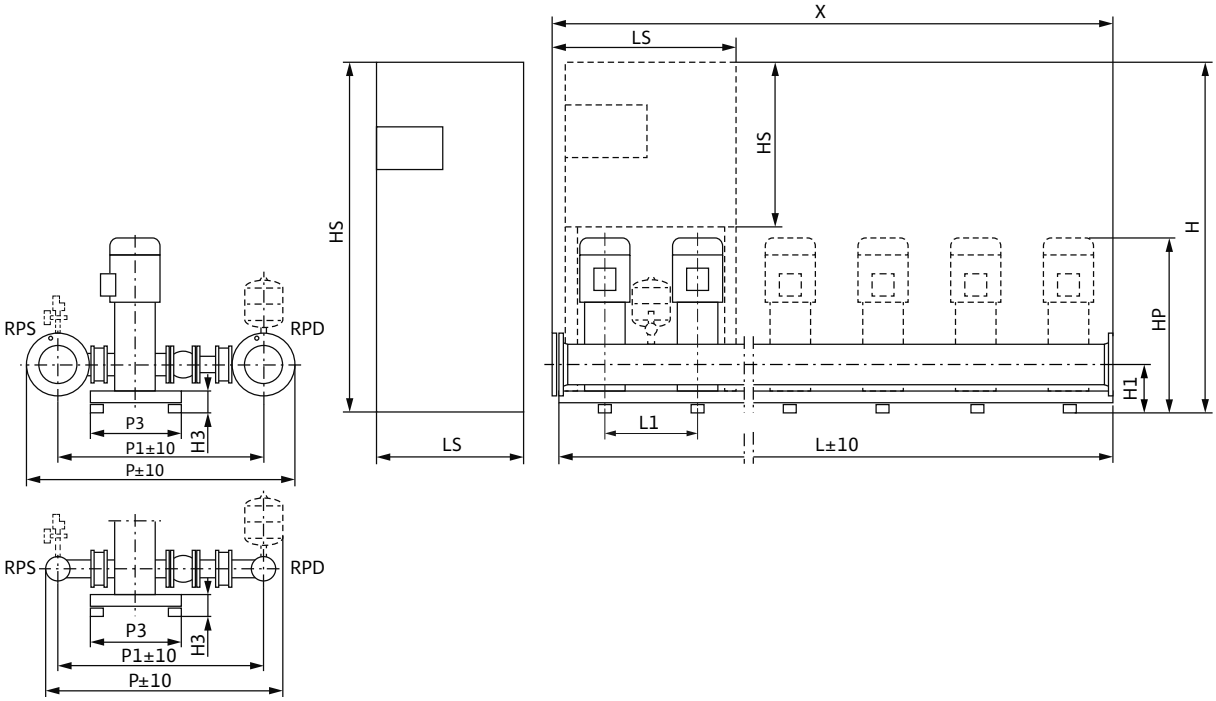

Sample systems are shown. Switchbox position depends on pump height.
Accessories (to be ordered separately): Optional WMS low-water cut-out switchgear kit
Installation surface: flat and horizontal
Installation location: dry, well ventilated and frost-proof

Dimensions, weights

Wilo-Comfort CO(R)-4Helix...	Nominal diameters of the pipe connections on suction side	Nominal diameters of pipe connections on the pressure side	Dimensions																Weight approx.	
											CO	COR	CO	COR	CO	COR	CO	COR	CO	COR
	RPS	*RPD*	*H1*	*H3*	*HP*	*L1*	*P*	*P1*	*P3*	*X*	*H*		*HS*		*L*		*LS*		*m*	
			mm																kg	
Helix V 1002/K/CC	R 3	R 3	185	105	766	300	915	767	450	1200	1685	1885	600	760	1200	1200	600	600	277	264
Helix V 1003/K/CC	R 3	R 3	185	105	804	300	915	767	450	1200	1685	1885	600	760	1200	1200	600	600	285	272
Helix V 1004/K/CC	R 3	R 3	185	105	874	300	915	767	450	1200	1685	1885	600	760	1200	1200	600	600	309	296
Helix V 1005/K/CC	R 3	R 3	185	105	911	300	915	767	450	1200	1885	1885	600	760	1200	1200	600	600	321	312
Helix V 1006/K/CC	R 3	R 3	185	105	949	300	915	767	450	1200	1885	1885	600	760	1200	1200	600	600	325	316
Helix V 1007/K/CC	R 3	R 3	185	105	1022	300	915	767	470	1200	1885	1685	600	760	1200	1800	600	600	342	338
Helix V 1008/K/CC	R 3	R 3	185	105	1059	300	915	767	470	1200	1885	1685	600	760	1200	1800	600	600	346	342
Helix V 1009/K/CC	R 3	R 3	185	105	1140	300	915	767	470	1200	1685	1685	600	760	1800	1800	600	600	400	390
Helix V 1010/K/CC	R 3	R 3	185	105	1178	300	915	767	470	1200	1685	1685	600	760	1800	1800	600	600	404	394
Helix V 1011/K/CC	R 3	R 3	185	105	1253	300	915	767	470	1200	1685	1685	600	760	1800	1800	600	600	408	398
Helix V 1012/K/CC	R 3	R 3	185	105	1245	300	915	767	450	1200	1900	1900	1900	1900	1200	1200	600	800	532	539
Helix V 1013/K/CC	R 3	R 3	185	105	1320	300	915	767	450	1200	1900	1900	1900	1900	1200	1200	600	800	536	543
Helix V 1015/K/CC	R 3	R 3	185	105	1395	300	915	767	450	1200	1900	1900	1900	1900	1200	1200	600	800	544	551

Technical data Wilo-Comfort CO-/COR-Helix V.../CC

Pump curves

Wilo-Comfort CO(R) -5 Helix V 1002-1015/CC

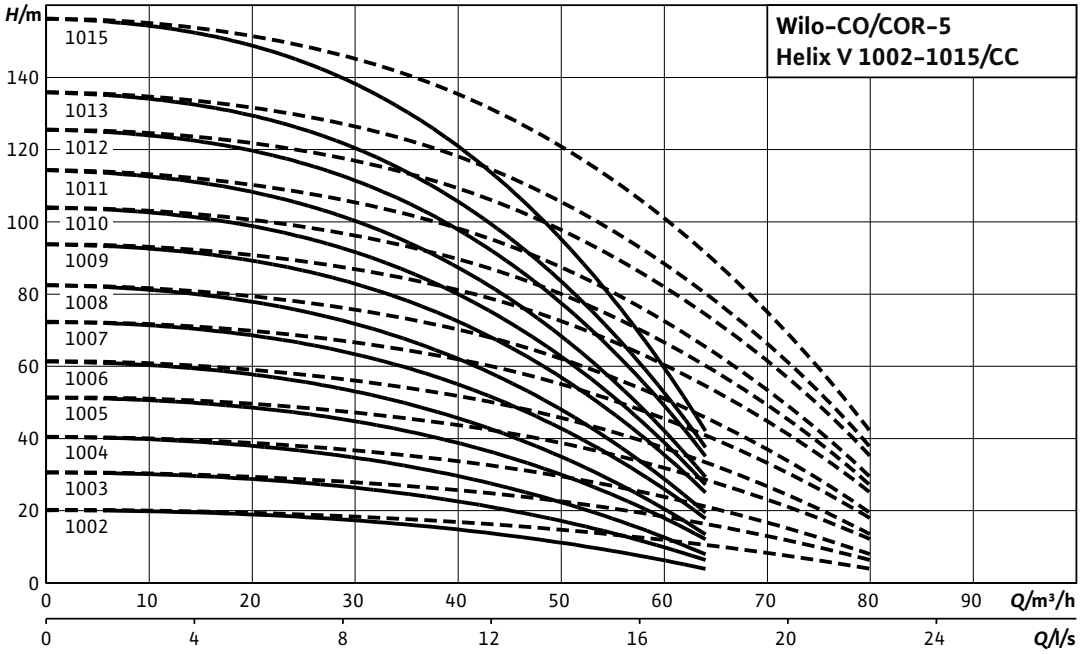

---- including standby pump

Motor data per pump

Wilo-Comfort CO(R)-5Helix...	Nominal motor power	Nominal current 3~400 V, 50 Hz	Motor efficiency		
	P_2	I_N	$\eta_{m\ 50\%}$	$\eta_{m\ 75\%}$	$\eta_{m\ 100\%}$
	kW	A	%		
Helix V 1002/K/CC	0.75	1.77	76.0	77.4	77.4
Helix V 1003/K/CC	1.1	2.6	78.0	79.6	79.6
Helix V 1004/K/CC	1.5	3.3	80.0	81.3	81.3
Helix V 1005/K/CC	2.2	4.6	82.0	83.2	83.2
Helix V 1006/K/CC	2.2	4.6	82.0	83.2	83.2
Helix V 1007/K/CC	3	6.7	82.5	85.0	84.6
Helix V 1008/K/CC	3	6.7	82.5	85.0	84.6
Helix V 1009/K/CC	4	7.8	85.0	85.8	85.8
Helix V 1010/K/CC	4	7.8	85.0	85.8	85.8
Helix V 1011/K/CC	4	7.8	85.0	85.8	85.8
Helix V 1012/K/CC	5.5	10.7	85.2	86.9	88.1
Helix V 1013/K/CC	5.5	10.7	85.2	86.9	88.1
Helix V 1015/K/CC	5.5	10.7	85.2	86.9	88.1

Motor efficiency based on 400 V, 50 Hz

Technical data Wilo-Comfort CO-/COR-Helix V.../CC

Dimension drawing

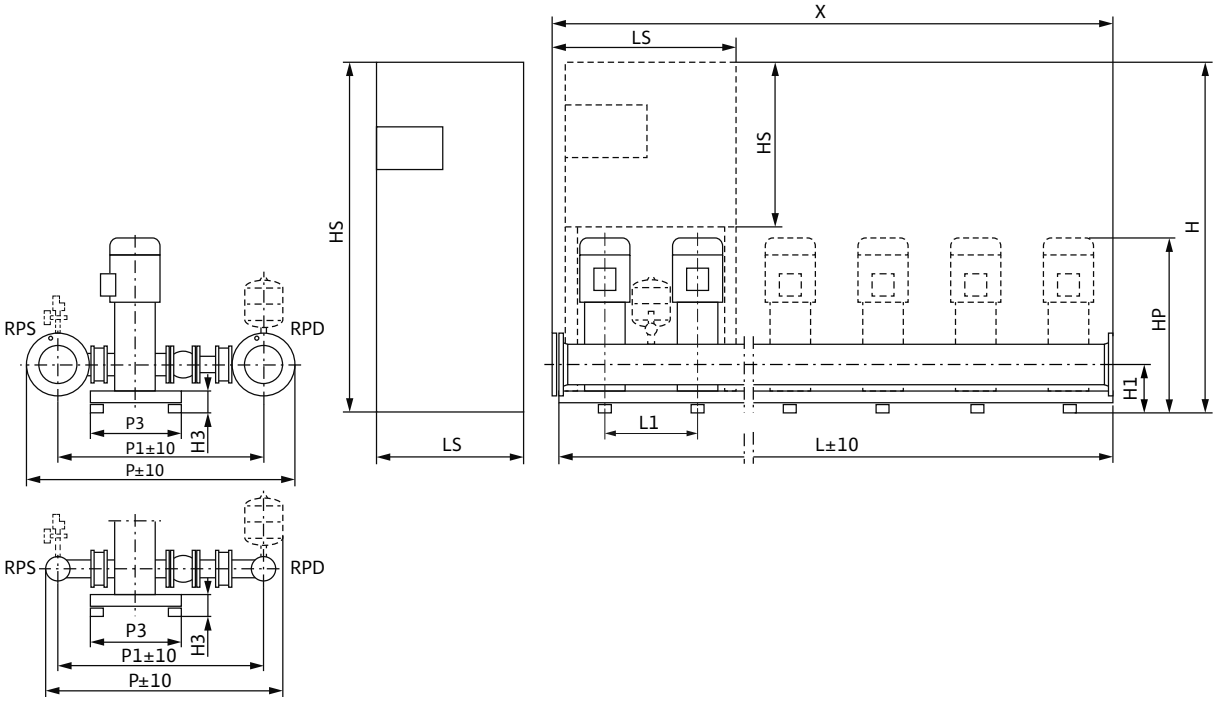

Sample systems are shown. Switchbox position depends on pump height.
Accessories (to be ordered separately): Optional WMS low-water cut-out switchgear kit
Installation surface: flat and horizontal
Installation location: dry, well ventilated and frost-proof

Dimensions, weights

Wilo-Comfort CO(R)-5Helix...	Nominal diameters of the pipe connections on suction side	Nominal diameters of pipe connections on the pressure side	Dimensions																Weight approx.	
											CO	COR	CO	COR	CO	COR	CO	COR	CO	COR
	RPS	*RPD*	*H1*	*H3*	*HP*	*L1*	*P*	*P1*	*P3*	*X*	*H*		*HS*		*L*		*LS*		*m*	
			mm																kg	
Helix V 1002/K/CC	DN 100	DN 100	185	105	766	300	1012	792	470	1500	1685	1885	600	760	1500	1500	600	760	324	347
Helix V 1003/K/CC	DN 100	DN 100	185	105	804	300	1012	792	470	1500	1685	1885	600	760	1500	1500	600	760	334	357
Helix V 1004/K/CC	DN 100	DN 100	185	105	874	300	1012	792	470	1500	1685	1885	600	760	1500	1500	600	760	364	387
Helix V 1005/K/CC	DN 100	DN 100	185	105	911	300	1012	792	470	1500	1885	1885	600	760	1500	1500	600	760	379	406
Helix V 1006/K/CC	DN 100	DN 100	185	105	949	300	1012	792	470	1500	1885	1885	600	760	1500	1500	600	760	384	411
Helix V 1007/K/CC	DN 100	DN 100	185	105	1022	300	1012	792	470	1500	1885	1685	600	760	1500	2300	600	760	405	451
Helix V 1008/K/CC	DN 100	DN 100	185	105	1059	300	1012	792	470	1500	1885	1685	600	760	1500	2300	600	760	410	456
Helix V 1009/K/CC	DN 100	DN 100	185	105	1140	300	1012	792	470	1500	1685	1685	600	760	2300	2300	600	760	490	516
Helix V 1010/K/CC	DN 100	DN 100	185	105	1178	300	1012	792	470	1500	1685	1685	600	760	2300	2300	600	760	495	521
Helix V 1011/K/CC	DN 100	DN 100	185	105	1253	300	1012	792	470	1500	1685	1685	600	760	2300	2300	600	760	500	526
Helix V 1012/K/CC	DN 100	DN 100	185	105	1245	300	1012	792	470	1500	1900	1900	1900	1900	1500	1500	800	1000	620	664
Helix V 1013/K/CC	DN 100	DN 100	185	105	1320	300	1012	792	470	1500	1900	1900	1900	1900	1500	1500	800	1000	625	669
Helix V 1015/K/CC	DN 100	DN 100	185	105	1395	300	1012	792	470	1500	1900	1900	1900	1900	1500	1500	800	1000	635	679

Technical data Wilo-Comfort CO-/COR-Helix V.../CC

Pump curves

Wilo-Comfort CO(R) -6 Helix V 1002-1015/CC

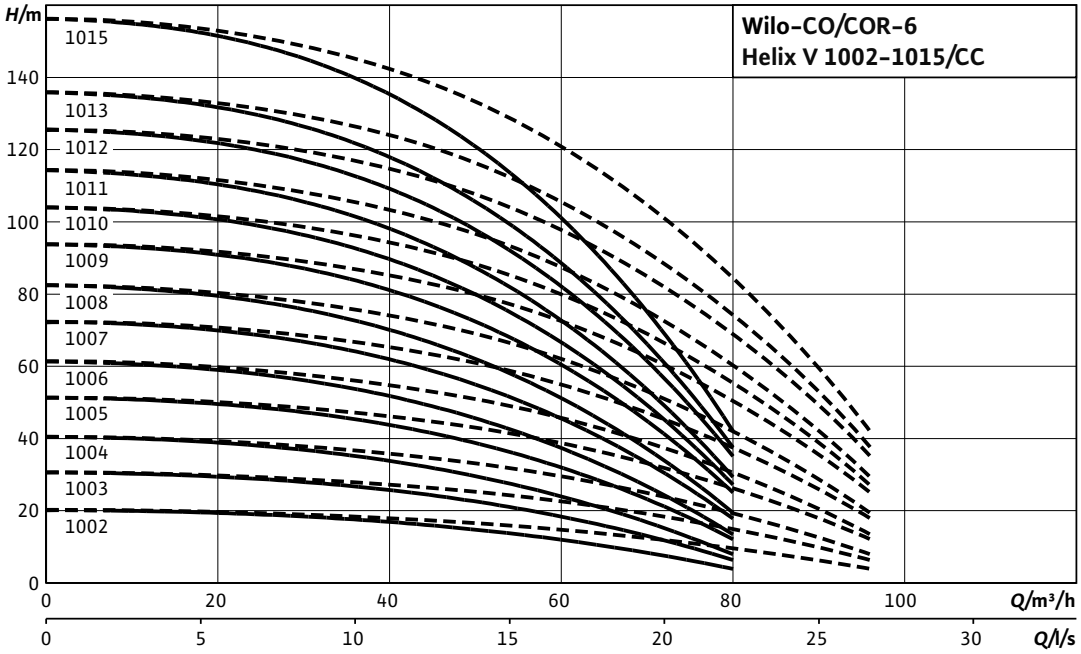

---- including standby pump

Motor data per pump

Wilo-Comfort CO(R)-6Helix...	Nominal motor power	Nominal current 3~400 V, 50 Hz	Motor efficiency		
	P_2	I_N	$\eta_{m\ 50\%}$	$\eta_{m\ 75\%}$	$\eta_{m\ 100\%}$
	kW	A	%		
Helix V 1002/K/CC	0.75	1.77	76.0	77.4	77.4
Helix V 1003/K/CC	1.1	2.6	78.0	79.6	79.6
Helix V 1004/K/CC	1.5	3.3	80.0	81.3	81.3
Helix V 1005/K/CC	2.2	4.6	82.0	83.2	83.2
Helix V 1006/K/CC	2.2	4.6	82.0	83.2	83.2
Helix V 1007/K/CC	3	6.7	82.5	85.0	84.6
Helix V 1008/K/CC	3	6.7	82.5	85.0	84.6
Helix V 1009/K/CC	4	7.8	85.0	85.8	85.8
Helix V 1010/K/CC	4	7.8	85.0	85.8	85.8
Helix V 1011/K/CC	4	7.8	85.0	85.8	85.8
Helix V 1012/K/CC	5.5	10.7	85.2	86.9	88.1
Helix V 1013/K/CC	5.5	10.7	85.2	86.9	88.1
Helix V 1015/K/CC	5.5	10.7	85.2	86.9	88.1

Motor efficiency based on 400 V, 50 Hz

Technical data Wilo-Comfort CO-/COR-Helix V.../CC

Dimension drawing

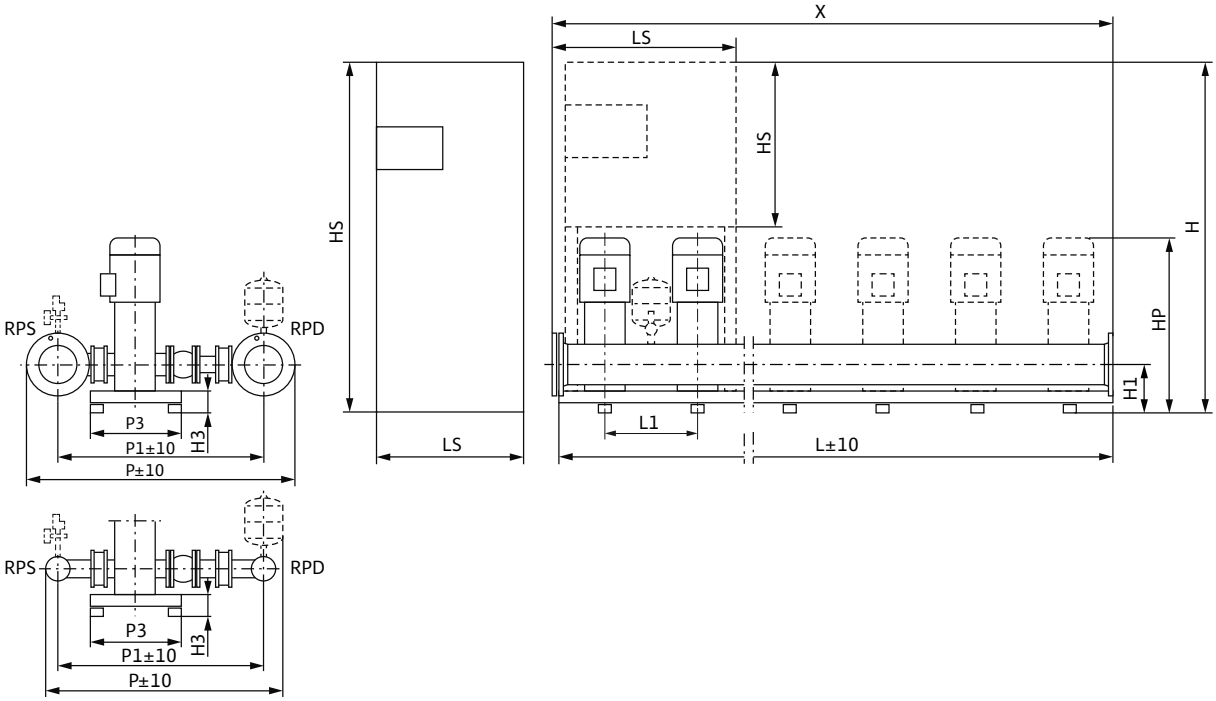

Sample systems are shown. Switchbox position depends on pump height.
Accessories (to be ordered separately): Optional WMS low-water cut-out switchgear kit
Installation surface: flat and horizontal
Installation location: dry, well ventilated and frost-proof

Dimensions, weights

Wilo-Comfort CO(R)-6Helix...	Nominal diameters of the pipe connections on suction side	Nominal diameters of pipe connections on the pressure side	Dimensions																Weight approx.	
											CO	COR	CO	COR	CO	COR	CO	COR	CO	COR
	RPS	*RPD*	*H1*	*H3*	*HP*	*L1*	*P*	*P1*	*P3*	*X*	*H*		*HS*		*L*		*LS*		*m*	
			mm																kg	
Helix V 1002/K/CC	DN 100	DN 100	185	105	766	300	1012	792	470	1800	1685	1885	600	760	1800	1800	600	760	371	394
Helix V 1003/K/CC	DN 100	DN 100	185	105	804	300	1012	792	470	1800	1685	1885	600	760	1800	1800	600	760	383	406
Helix V 1004/K/CC	DN 100	DN 100	185	105	874	300	1012	792	470	1800	1685	1885	600	760	1800	1800	600	760	419	442
Helix V 1005/K/CC	DN 100	DN 100	185	105	911	300	1012	792	470	1800	1685	1885	600	760	1800	1800	600	760	437	464
Helix V 1006/K/CC	DN 100	DN 100	185	105	949	300	1012	792	470	1800	1685	1885	600	760	1800	1800	600	760	443	470
Helix V 1007/K/CC	DN 100	DN 100	185	105	1022	300	1012	792	470	1800	1885	1685	600	760	1800	2600	600	760	467	515
Helix V 1008/K/CC	DN 100	DN 100	185	105	1059	300	1012	792	470	1800	1885	1685	600	760	1800	2600	600	760	473	521
Helix V 1009/K/CC	DN 100	DN 100	185	105	1140	300	1012	792	470	1800	1685	1685	600	760	2600	2600	600	760	565	594
Helix V 1010/K/CC	DN 100	DN 100	185	105	1178	300	1012	792	470	1800	1685	1685	600	760	2600	2600	600	760	571	600
Helix V 1011/K/CC	DN 100	DN 100	185	105	1253	300	1012	792	470	1800	1685	1685	600	760	2600	2600	600	760	577	606
Helix V 1012/K/CC	DN 100	DN 100	185	105	1245	300	1012	792	470	1800	1900	1900	1900	1900	1800	1800	800	1000	710	750
Helix V 1013/K/CC	DN 100	DN 100	185	105	1320	300	1012	792	470	1800	1900	1900	1900	1900	1800	1800	800	1000	716	756
Helix V 1015/K/CC	DN 100	DN 100	185	105	1395	300	1012	792	470	1800	1900	1900	1900	1900	1800	1800	800	1000	728	768

Technical data Wilo-Comfort CO-/COR-Helix V.../CC

Pump curves

Wilo-Comfort CO(R) -2 Helix V 1603-1611/CC

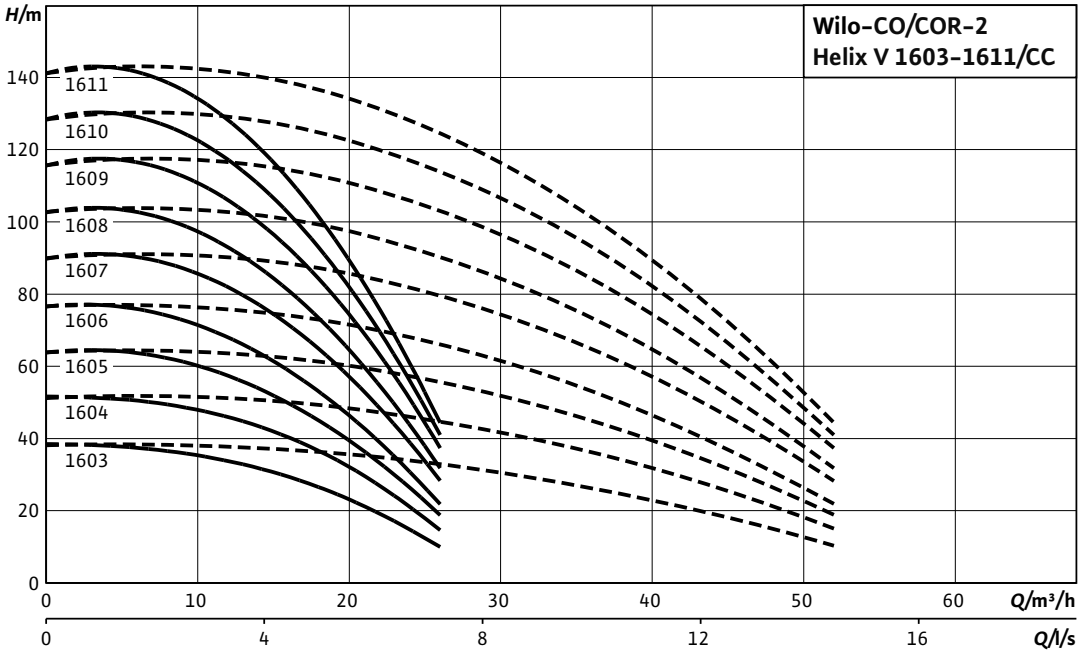

---- including standby pump

Motor data per pump

Wilo-Comfort CO(R)-2 Helix...	Nominal motor power	Nominal current 3~400 V, 50 Hz	Motor efficiency		
	P_2	I_N	$\eta_{m\ 50\%}$	$\eta_{m\ 75\%}$	$\eta_{m\ 100\%}$
	kW	A	%		
Helix V 1603/K/CC	2.2	4.6	82.0	83.2	83.2
Helix V 1604/K/CC	3	6.7	82.5	85.0	84.6
Helix V 1605/K/CC	4	7.8	85.0	85.8	85.8
Helix V 1606/K/CC	4	7.8	85.0	85.8	85.8
Helix V 1607/K/CC	5.5	10.7	85.2	86.9	88.1
Helix V 1608/K/CC	5.5	10.7	85.2	86.9	88.1
Helix V 1609/K/CC	7.5	14	88.5	89.9	89.5
Helix V 1610/K/CC	7.5	14	88.5	89.9	89.5
Helix V 1611/K/CC	7.5	14	88.5	89.9	89.5

Motor efficiency based on 400 V, 50 Hz

Technical data Wilo-Comfort CO-/COR-Helix V.../CC

Dimension drawing

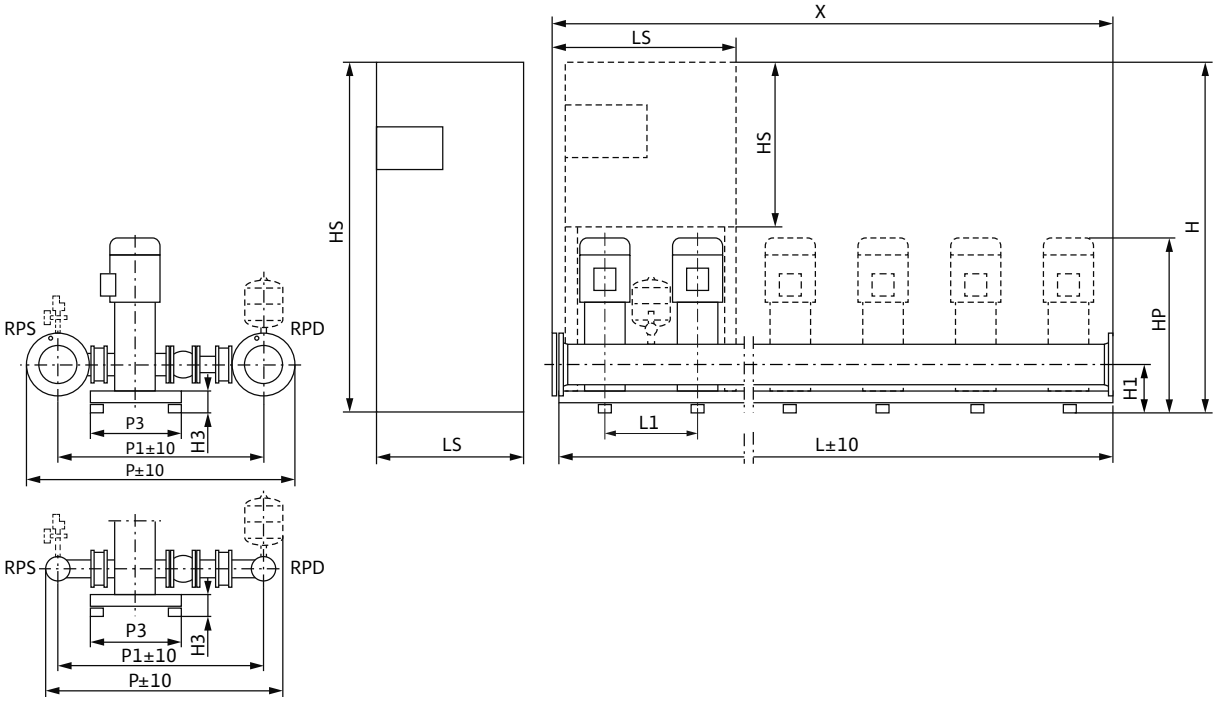

Sample systems are shown. Switchbox position depends on pump height.
Accessories (to be ordered separately): Optional WMS low-water cut-out switchgear kit
Installation surface: flat and horizontal
Installation location: dry, well ventilated and frost-proof

Dimensions, weights

Wilo-Comfort CO(R)-2 Helix...	Nominal diameters of the pipe connections on suction side	Nominal diameters of pipe connections on the pressure side	Dimensions																Weight approx.	
											CO	COR	CO	COR	CO	COR	CO	COR	CO	COR
	RPS	*RPD*	*H1*	*H3*	*HP*	*L1*	*P*	*P1*	*P3*	*X*	*H*		*HS*		*L*		*LS*		*m*	
			mm																kg	
Helix V 1603/K/CC	R 2½	R 2½	192	102	881	300	912	770	450	600	1885	1885	600	760	600	600	600	600	174	190
Helix V 1604/K/CC	R 2½	R 2½	192	102	966	300	912	770	450	600	1885	1885	600	760	600	600	600	600	184	201
Helix V 1605/K/CC	R 2½	R 2½	192	102	1062	300	912	770	450	600	1885	1885	600	760	600	1200	600	600	206	223
Helix V 1606/K/CC	R 2½	R 2½	192	102	1112	300	912	770	450	600	1885	1885	600	760	600	1200	600	600	208	225
Helix V 1607/K/CC	R 2½	R 2½	192	102	1152	300	912	770	450	600	1885	–	760	1900	1200	600	600	600	279	394
Helix V 1608/K/CC	R 2½	R 2½	192	102	1202	300	912	770	450	600	1885	–	760	1900	1200	600	600	600	283	398
Helix V 1609/K/CC	R 2½	R 2½	212	122	1459	500	912	770	500	1000	1905	–	760	1900	1580	1080	600	600	326	443
Helix V 1610/K/CC	R 2½	R 2½	212	122	1609	500	912	770	500	1000	1905	–	760	1900	1580	1080	600	600	330	447
Helix V 1611/K/CC	R 2½	R 2½	212	122	1609	500	912	770	500	1000	1905	–	760	1900	1580	1080	600	600	332	449

Technical data Wilo-Comfort CO-/COR-Helix V.../CC

Pump curves

Wilo-Comfort CO(R) -3 Helix V 1603-1611/CC

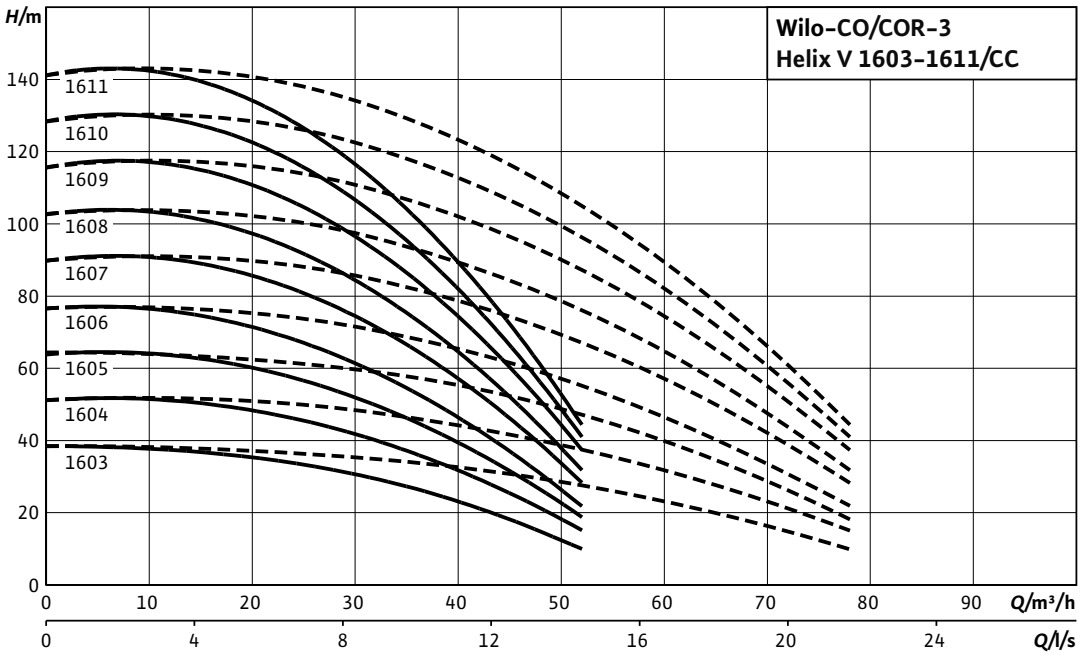

---- including standby pump

Motor data per pump

Wilo-Comfort CO(R)-3Helix...	Nominal motor power	Nominal current 3~400 V, 50 Hz	Motor efficiency		
	P_2	I_N	$\eta_{m\ 50\%}$	$\eta_{m\ 75\%}$	$\eta_{m\ 100\%}$
	kW	A	%		
Helix V 1603/K/CC	2.2	4.6	82.0	83.2	83.2
Helix V 1604/K/CC	3	6.7	82.5	85.0	84.6
Helix V 1605/K/CC	4	7.8	85.0	85.8	85.8
Helix V 1606/K/CC	4	7.8	85.0	85.8	85.8
Helix V 1607/K/CC	5.5	10.7	85.2	86.9	88.1
Helix V 1608/K/CC	5.5	10.7	85.2	86.9	88.1
Helix V 1609/K/CC	7.5	14	88.5	89.9	89.5
Helix V 1610/K/CC	7.5	14	88.5	89.9	89.5
Helix V 1611/K/CC	7.5	14	88.5	89.9	89.5

Motor efficiency based on 400 V, 50 Hz

Technical data Wilo-Comfort CO-/COR-Helix V.../CC

Dimension drawing

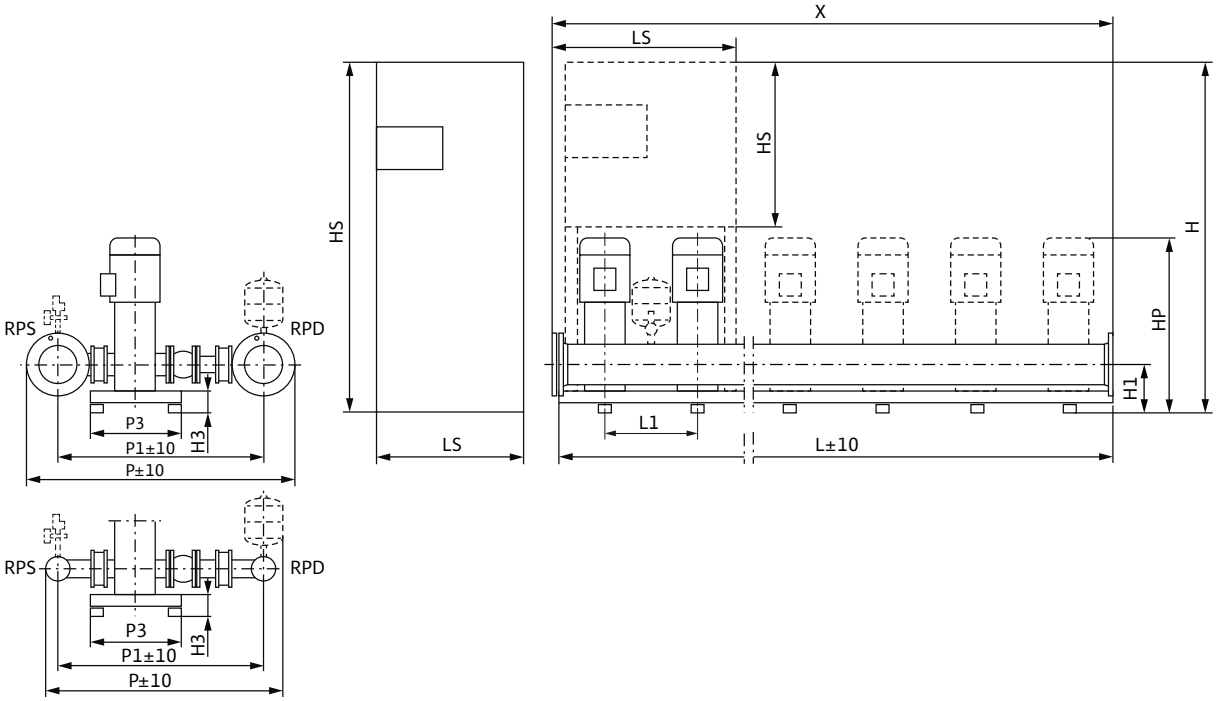

Sample systems are shown. Switchbox position depends on pump height.
Accessories (to be ordered separately): Optional WMS low-water cut-out switchgear kit
Installation surface: flat and horizontal
Installation location: dry, well ventilated and frost-proof

Dimensions, weights

Wilo-Comfort CO(R)-3Helix...	Nominal diameters of the pipe connections on suction side	Nominal diameters of pipe connections on the pressure side	Dimensions																Weight approx.	
											CO	COR	CO	COR	CO	COR	CO	COR	CO	COR
	RPS	*RPD*	*H1*	*H3*	*HP*	*L1*	*P*	*P1*	*P3*	*X*	*H*		*HS*		*L*		*LS*		*m*	
			mm																kg	
Helix V 1603/K/CC	R 3	R 3	192	102	881	300	980	785	450	900	1885	1885	600	760	900	900	600	600	234	250
Helix V 1604/K/CC	R 3	R 3	192	102	966	300	980	785	450	900	1885	1885	600	760	900	900	600	600	250	265
Helix V 1605/K/CC	R 3	R 3	192	102	1062	300	980	785	470	900	1885	1885	600	760	900	1500	600	600	283	305
Helix V 1606/K/CC	R 3	R 3	192	102	1112	300	980	785	470	900	1885	1885	600	760	900	1500	600	600	286	308
Helix V 1607/K/CC	R 3	R 3	192	102	1152	300	980	785	450	900	1885	–	760	1900	1500	900	600	800	362	492
Helix V 1608/K/CC	R 3	R 3	192	102	1202	300	980	785	450	900	1885	–	760	1900	1500	900	600	800	368	498
Helix V 1609/K/CC	R 3	R 3	212	122	1459	500	980	785	500	1500	1905	–	760	1900	2080	1580	600	800	448	567
Helix V 1610/K/CC	R 3	R 3	212	122	1609	500	980	785	500	1500	1905	–	760	1900	2080	1580	600	800	454	573
Helix V 1611/K/CC	R 3	R 3	212	122	1609	500	980	785	500	1500	1905	–	760	1900	2080	1580	600	800	457	576

Technical data Wilo-Comfort CO-/COR-Helix V.../CC

Pump curves

Wilo-Comfort CO(R) -4 Helix V 1603-1611/CC

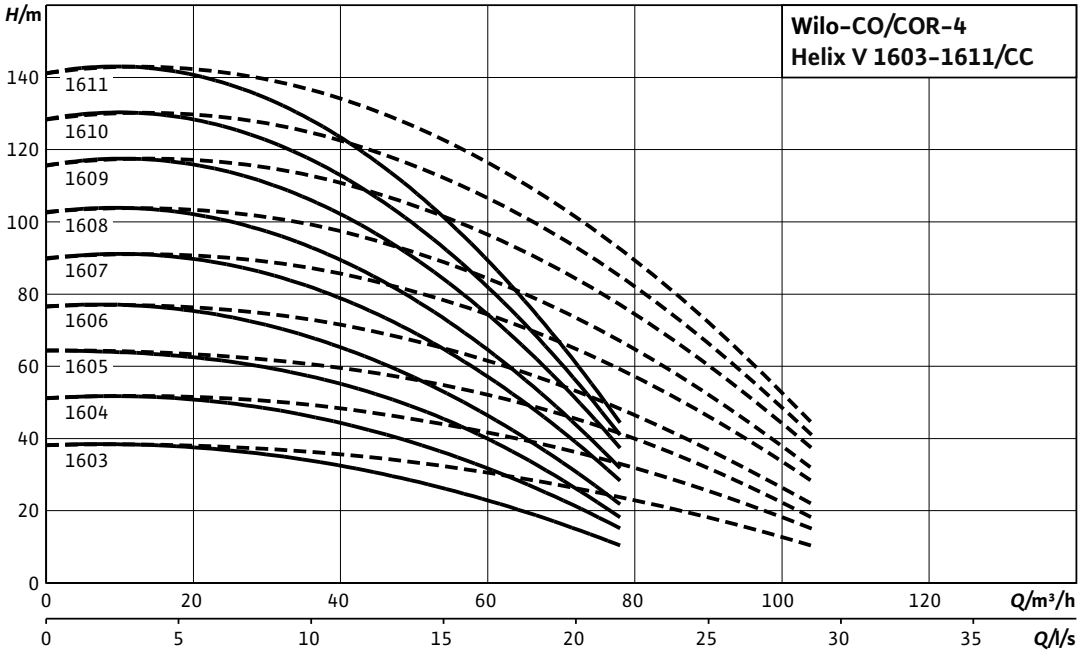

---- including standby pump

Motor data per pump

Wilo-Comfort CO(R)-4Helix...	Nominal motor power	Nominal current 3~400 V, 50 Hz	Motor efficiency		
	P_2	I_N	$\eta_{m\ 50\%}$	$\eta_{m\ 75\%}$	$\eta_{m\ 100\%}$
	kW	A	%		
Helix V 1603/K/CC	2.2	4.6	82.0	83.2	83.2
Helix V 1604/K/CC	3	6.7	82.5	85.0	84.6
Helix V 1605/K/CC	4	7.8	85.0	85.8	85.8
Helix V 1606/K/CC	4	7.8	85.0	85.8	85.8
Helix V 1607/K/CC	5.5	10.7	85.2	86.9	88.1
Helix V 1608/K/CC	5.5	10.7	85.2	86.9	88.1
Helix V 1609/K/CC	7.5	14	88.5	89.9	89.5
Helix V 1610/K/CC	7.5	14	88.5	89.9	89.5
Helix V 1611/K/CC	7.5	14	88.5	89.9	89.5

Motor efficiency based on 400 V, 50 Hz

Technical data Wilo-Comfort CO-/COR-Helix V.../CC

Dimension drawing

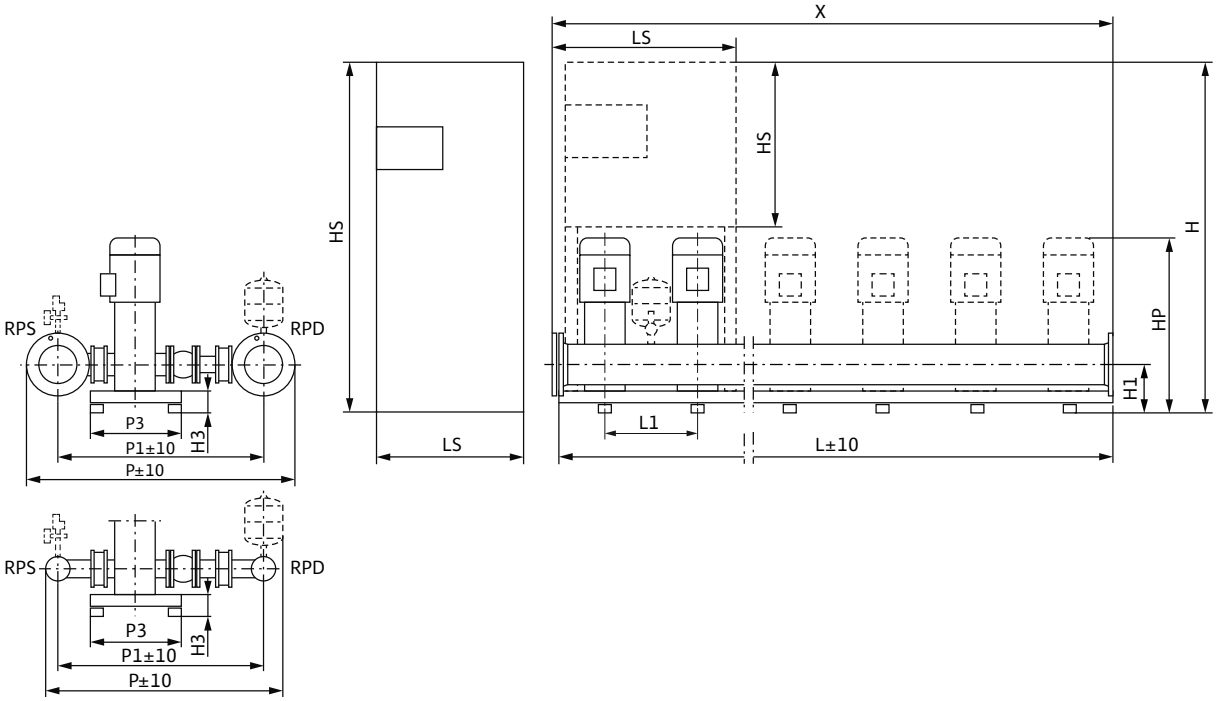

Sample systems are shown. Switchbox position depends on pump height.
Accessories (to be ordered separately): Optional WMS low-water cut-out switchgear kit
Installation surface: flat and horizontal
Installation location: dry, well ventilated and frost-proof

Dimensions, weights

Wilo-Comfort CO(R)-4Helix...	Nominal diameters of the pipe connections on suction side	Nominal diameters of pipe connections on the pressure side	Dimensions																Weight approx.	
											CO	COR	CO	COR	CO	COR	CO	COR	CO	COR
	RPS	*RPD*	*H1*	*H3*	*HP*	*L1*	*P*	*P1*	*P3*	*X*	*H*		*HS*		*L*		*LS*		*m*	
			mm																kg	
Helix V 1603/K/CC	DN 100	DN 100	192	102	881	300	1036	816	450	1200	1885	1885	600	760	1200	1200	600	600	322	337
Helix V 1604/K/CC	DN 100	DN 100	192	102	966	300	1036	816	450	1200	1885	1885	600	760	1200	1200	600	600	342	357
Helix V 1605/K/CC	DN 100	DN 100	192	102	1062	300	1036	816	470	1200	1885	1885	600	760	1200	1800	600	600	386	407
Helix V 1606/K/CC	DN 100	DN 100	192	102	1112	300	1036	816	470	1200	1885	1885	600	760	1200	1800	600	600	390	411
Helix V 1607/K/CC	DN 100	DN 100	192	102	1152	300	1036	816	450	1200	–	–	1900	1900	1200	1200	600	800	543	600
Helix V 1608/K/CC	DN 100	DN 100	192	102	1202	300	1036	816	450	1200	–	–	1900	1900	1200	1200	600	800	551	608
Helix V 1609/K/CC	DN 100	DN 100	212	122	1459	500	1036	816	500	2000	–	–	1900	1900	2080	2080	600	800	650	706
Helix V 1610/K/CC	DN 100	DN 100	212	122	1609	500	1036	816	500	2000	–	–	1900	1900	2080	2080	600	800	658	714
Helix V 1611/K/CC	DN 100	DN 100	212	122	1609	500	1036	816	500	2000	–	–	1900	1900	2080	2080	600	800	662	718

Technical data Wilo-Comfort CO-/COR-Helix V.../CC

Pump curves

Wilo-Comfort CO(R) -5 Helix V 1603-1611/CC

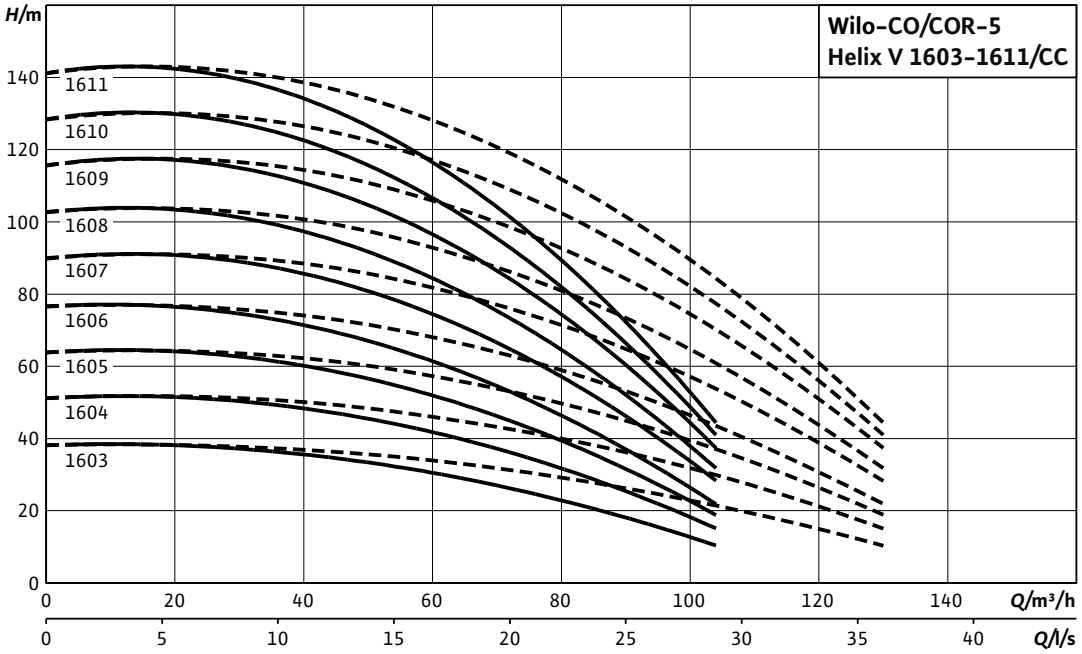

---- including standby pump

Motor data per pump

Wilo-Comfort CO(R)-5Helix...	Nominal motor power	Nominal current 3~400 V, 50 Hz	Motor efficiency		
	P_2	I_N	$\eta_{m\ 50\%}$	$\eta_{m\ 75\%}$	$\eta_{m\ 100\%}$
	kW	A	%		
Helix V 1603/K/CC	2.2	4.6	82.0	83.2	83.2
Helix V 1604/K/CC	3	6.7	82.5	85.0	84.6
Helix V 1605/K/CC	4	7.8	85.0	85.8	85.8
Helix V 1606/K/CC	4	7.8	85.0	85.8	85.8
Helix V 1607/K/CC	5.5	10.7	85.2	86.9	88.1
Helix V 1608/K/CC	5.5	10.7	85.2	86.9	88.1
Helix V 1609/K/CC	7.5	14	88.5	89.9	89.5
Helix V 1610/K/CC	7.5	14	88.5	89.9	89.5
Helix V 1611/K/CC	7.5	14	88.5	89.9	89.5

Motor efficiency based on 400 V, 50 Hz

Technical data Wilo-Comfort CO-/COR-Helix V.../CC

Dimension drawing

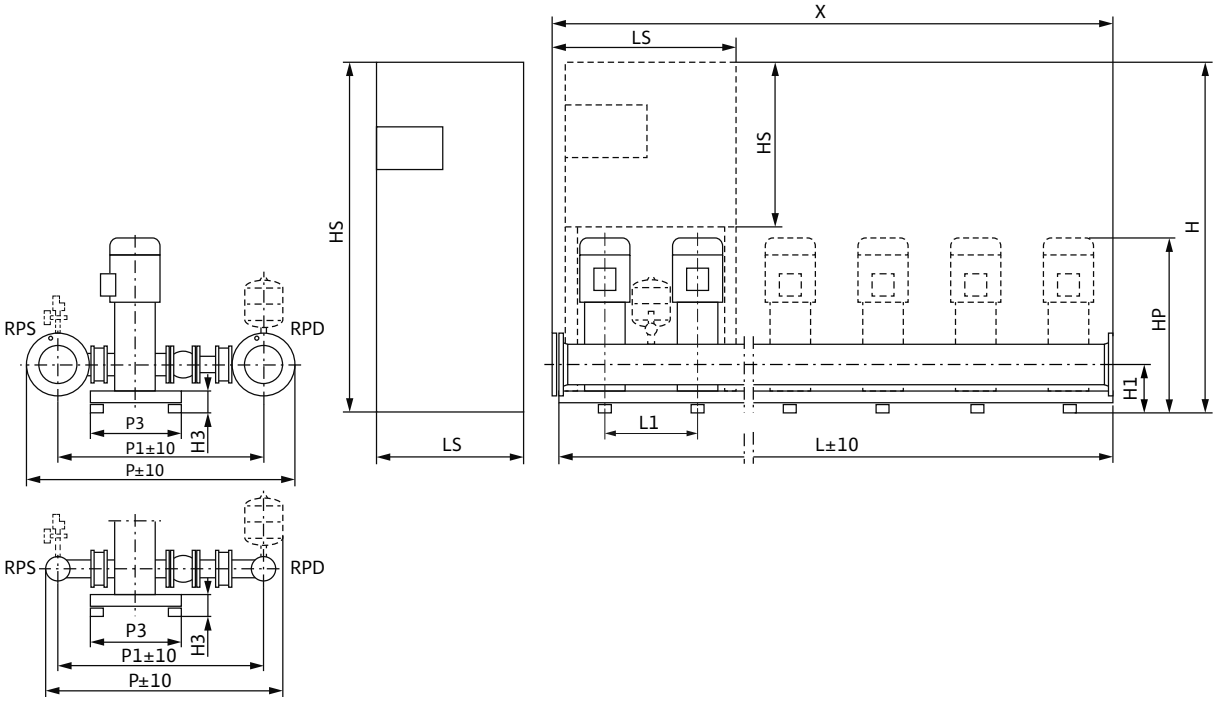

Sample systems are shown. Switchbox position depends on pump height.
Accessories (to be ordered separately): Optional WMS low-water cut-out switchgear kit
Installation surface: flat and horizontal
Installation location: dry, well ventilated and frost-proof

Dimensions, weights

Wilo-Comfort CO(R)-5Helix...	Nominal diameters of the pipe connections on suction side	Nominal diameters of pipe connections on the pressure side	Dimensions																Weight approx.	
											CO	COR	CO	COR	CO	COR	CO	COR	CO	COR
	RPS	*RPD*	*H1*	*H3*	*HP*	*L1*	*P*	*P1*	*P3*	*X*	*H*		*HS*		*L*		*LS*		*m*	
			mm																kg	
Helix V 1603/K/CC	DN 100	DN 100	192	102	881	300	1036	816	470	1500	1885	1885	600	760	1500	1500	600	760	366	391
Helix V 1604/K/CC	DN 100	DN 100	192	102	966	300	1036	816	470	1500	1885	1885	600	760	1500	1500	600	760	391	416
Helix V 1605/K/CC	DN 100	DN 100	192	102	1062	300	1036	816	470	1500	1885	1885	600	760	1500	2300	600	760	447	490
Helix V 1606/K/CC	DN 100	DN 100	192	102	1112	300	1036	816	470	1500	1885	1885	600	760	1500	2300	600	760	452	495
Helix V 1607/K/CC	DN 100	DN 100	192	102	1152	300	1036	816	470	1500	–	–	1900	1900	1500	1500	800	1000	651	695
Helix V 1608/K/CC	DN 100	DN 100	192	102	1202	300	1036	816	470	1500	–	–	1900	1900	1500	1500	800	1000	661	705
Helix V 1609/K/CC	DN 100	DN 100	212	122	1459	500	1036	816	500	2500	–	–	1900	1900	2580	2580	800	1000	799	842
Helix V 1610/K/CC	DN 100	DN 100	212	122	1609	500	1036	816	500	2500	–	–	1900	1900	2580	2580	800	1000	809	852
Helix V 1611/K/CC	DN 100	DN 100	212	122	1609	500	1036	816	500	2500	–	–	1900	1900	2580	2580	800	1000	814	857

Technical data Wilo-Comfort CO-/COR-Helix V.../CC

Pump curves

Wilo-Comfort CO(R) -6 Helix V 1603-1611/CC

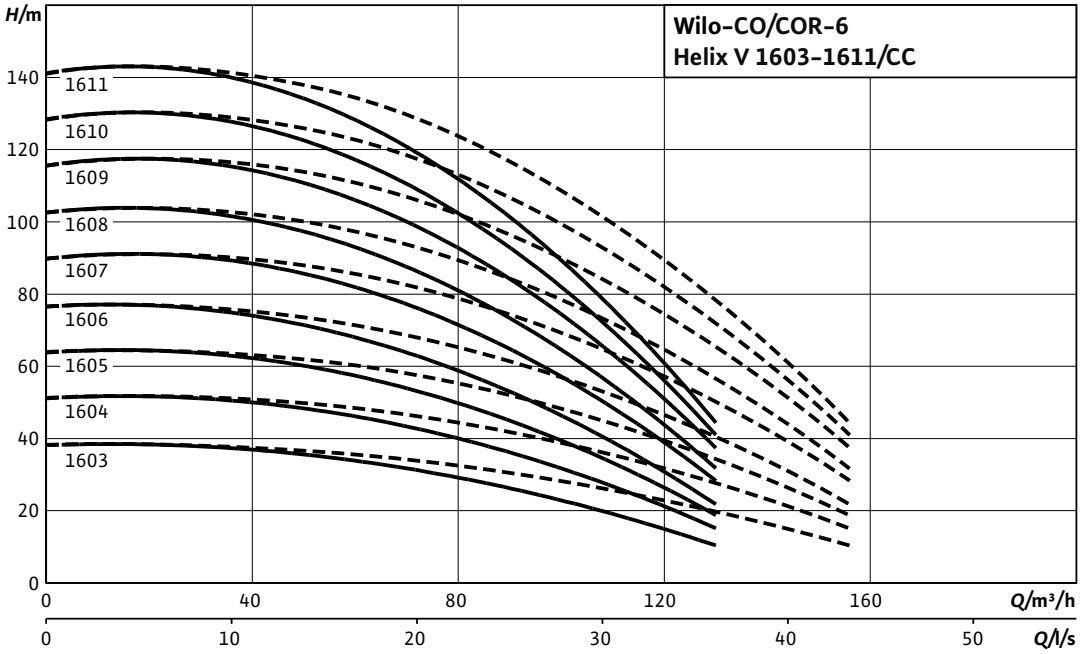

---- including standby pump

Motor data per pump

Wilo-Comfort CO(R)-6Helix...	Nominal motor power	Nominal current 3~400 V, 50 Hz	Motor efficiency		
	P_2	I_N	$\eta_{m\ 50\%}$	$\eta_{m\ 75\%}$	$\eta_{m\ 100\%}$
	kW	A	%		
Helix V 1603/K/CC	2.2	4.6	82.0	83.2	83.2
Helix V 1604/K/CC	3	6.7	82.5	85.0	84.6
Helix V 1605/K/CC	4	7.8	85.0	85.8	85.8
Helix V 1606/K/CC	4	7.8	85.0	85.8	85.8
Helix V 1607/K/CC	5.5	10.7	85.2	86.9	88.1
Helix V 1608/K/CC	5.5	10.7	85.2	86.9	88.1
Helix V 1609/K/CC	7.5	14	88.5	89.9	89.5
Helix V 1610/K/CC	7.5	14	88.5	89.9	89.5
Helix V 1611/K/CC	7.5	14	88.5	89.9	89.5

Motor efficiency based on 400 V, 50 Hz

Technical data Wilo-Comfort CO-/COR-Helix V.../CC

Dimension drawing

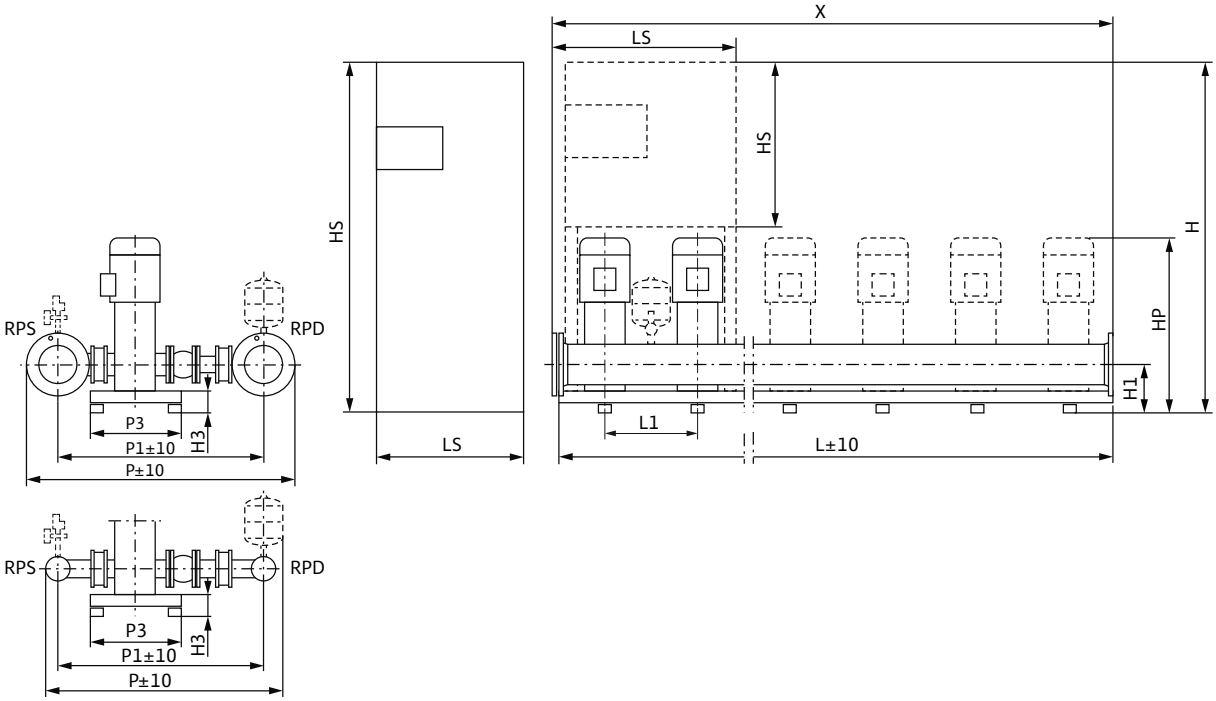

Sample systems are shown. Switchbox position depends on pump height.
Accessories (to be ordered separately): Optional WMS low-water cut-out switchgear kit
Installation surface: flat and horizontal
Installation location: dry, well ventilated and frost-proof

Dimensions, weights

Wilo-Comfort CO(R)-6Helix...	Nominal diameters of the pipe connections on suction side	Nominal diameters of pipe connections on the pressure side	Dimensions																Weight approx.	
											CO	COR	CO	COR	CO	COR	CO	COR	CO	COR
	RPS	*RPD*	*H1*	*H3*	*HP*	*L1*	*P*	*P1*	*P3*	*X*	*H*		*HS*		*L*		*LS*		*m*	
			mm																kg	
Helix V 1603/K/CC	DN 125	DN 125	192	102	881	300	1088	838	470	1800	1885	1885	600	760	1800	1800	600	760	445	470
Helix V 1604/K/CC	DN 125	DN 125	192	102	966	300	1088	838	470	1800	1885	1885	600	760	1800	1800	600	760	475	501
Helix V 1605/K/CC	DN 125	DN 125	192	102	1062	300	1088	838	470	1800	1885	1885	600	760	1800	2600	600	760	541	588
Helix V 1606/K/CC	DN 125	DN 125	192	102	1112	300	1088	838	470	1800	1885	1885	600	760	1800	2600	600	760	547	594
Helix V 1607/K/CC	DN 125	DN 125	192	102	1152	300	1088	838	470	1800	–	–	1900	1900	1800	1800	800	1000	772	812
Helix V 1608/K/CC	DN 125	DN 125	192	102	1202	300	1088	838	470	1800	–	–	1900	1900	1800	1800	800	1000	784	824
Helix V 1609/K/CC	DN 125	DN 125	212	122	1459	500	1088	838	500	3000	–	–	1900	1900	3000	3000	800	1000	955	995
Helix V 1610/K/CC	DN 125	DN 125	212	122	1609	500	1088	838	500	3000	–	–	1900	1900	3000	3000	800	1000	967	1007
Helix V 1611/K/CC	DN 125	DN 125	212	122	1609	500	1088	838	500	3000	–	–	1900	1900	3000	3000	800	1000	973	1013

Technical data Wilo-Comfort CO-/COR-Helix V.../CC

Pump curves

Wilo-Comfort CO(R) -2 Helix V 2202-2208/CC

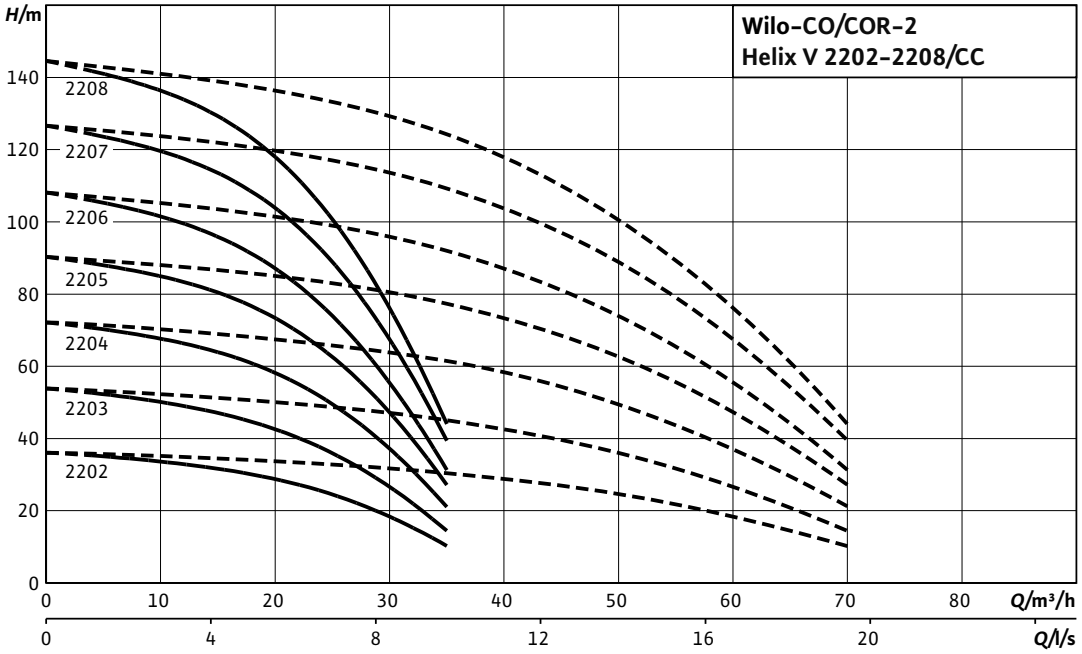

---- including standby pump

Motor data per pump

Wilo-Comfort CO(R)-2 Helix...	Nominal motor power	Nominal current 3~400 V, 50 Hz	Motor efficiency		
	P_2	I_N	$\eta_{m\ 50\%}$	$\eta_{m\ 75\%}$	$\eta_{m\ 100\%}$
	kW	A	%		
Helix V 2202/K/CC	3	4.4	82.5	85.0	84.6
Helix V 2203/K/CC	4	7.7	85.0	85.8	85.8
Helix V 2204/K/CC	5.5	10.1	85.2	86.9	88.1
Helix V 2205/K/CC	7.5	13.5	88.5	89.9	89.5
Helix V 2206/K/CC	7.5	13.5	88.5	89.9	89.5
Helix V 2207/K/CC	9	16.3	86.6	88.4	88.8
Helix V 2208/K/CC	11	19.8	87.5	89.3	89.4

Motor efficiency based on 400 V, 50 Hz

Technical data Wilo-Comfort CO-/COR-Helix V.../CC

Dimension drawing

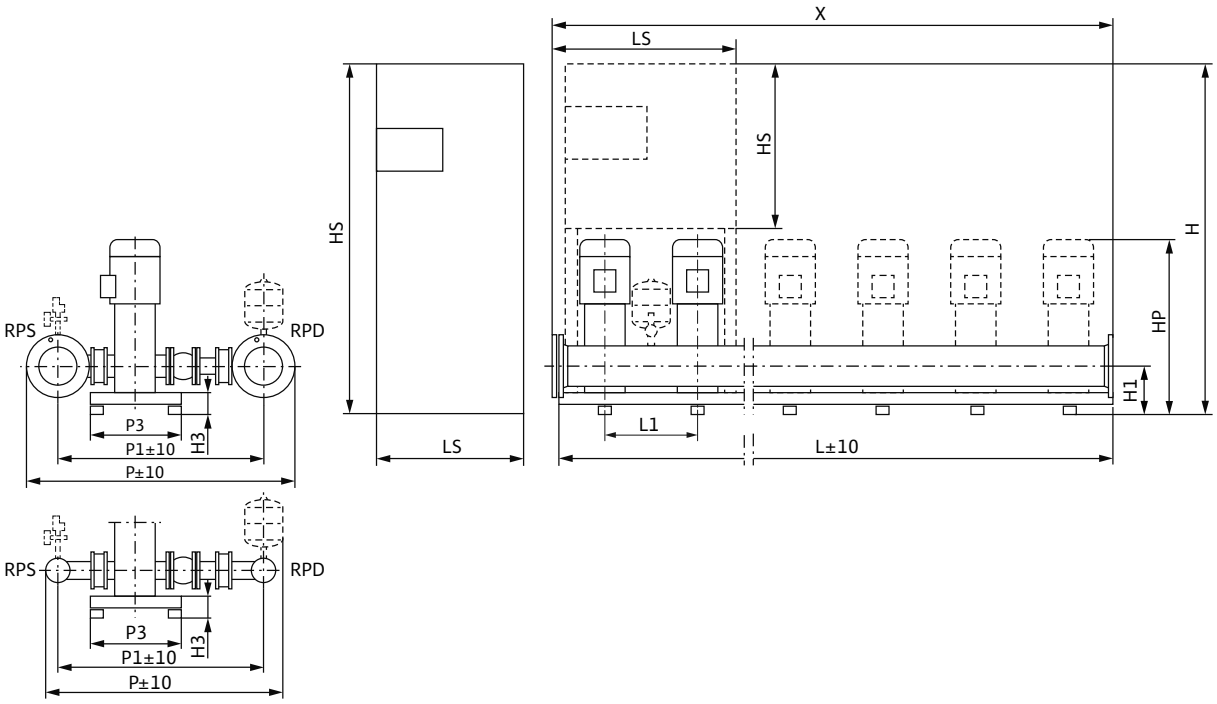

Sample systems are shown. Switchbox position depends on pump height.
Accessories (to be ordered separately): Optional WMS low-water cut-out switchgear kit
Installation surface: flat and horizontal
Installation location: dry, well ventilated and frost-proof

Dimensions, weights

Wilo-Comfort CO(R)-2 Helix...	Nominal diameters of the pipe connections on suction side	Nominal diameters of pipe connections on the pressure side	Dimensions																Weight approx.	
											CO	COR	CO	COR	CO	COR	CO	COR	CO	COR
	RPS	*RPD*	*H1*	*H3*	*HP*	*L1*	*P*	*P1*	*P3*	*X*	*H*		*HS*		*L*		*LS*		*m*	
			mm																kg	
Helix V 2202/K/CC	Rp 3	Rp 3	215	125	968	500	1147	1000	500	1000	1905	1905	600	760	1080	1080	600	600	290	302
Helix V 2203/K/CC	Rp 3	Rp 3	215	125	1063	500	1147	1000	500	1000	1905	1905	600	760	1080	1080	600	600	303	409
Helix V 2204/K/CC	Rp 3	Rp 3	215	125	1252	500	1147	1000	500	1000	1905	–	760	1900	1580	1080	600	600	480	473
Helix V 2205/K/CC	Rp 3	Rp 3	215	125	1337	500	1147	1000	500	1000	1905	–	760	1900	1580	1080	600	600	498	540
Helix V 2206/K/CC	Rp 3	Rp 3	215	125	1387	500	1147	1000	500	1000	1905	–	760	1900	1580	1080	600	600	502	544
Helix V 2207/K/CC	Rp 3	Rp 3	215	125	1437	500	1147	1000	500	1000	1905	–	760	1900	1580	1080	600	800	519	547
Helix V 2208/K/CC	Rp 3	Rp 3	215	125	1598	500	1147	1000	500	1000	1905	–	760	1900	1580	1080	600	800	586	623

Technical data Wilo-Comfort CO-/COR-Helix V.../CC

Pump curves

Wilo-Comfort CO(R) -3 Helix V 2202-2208/CC

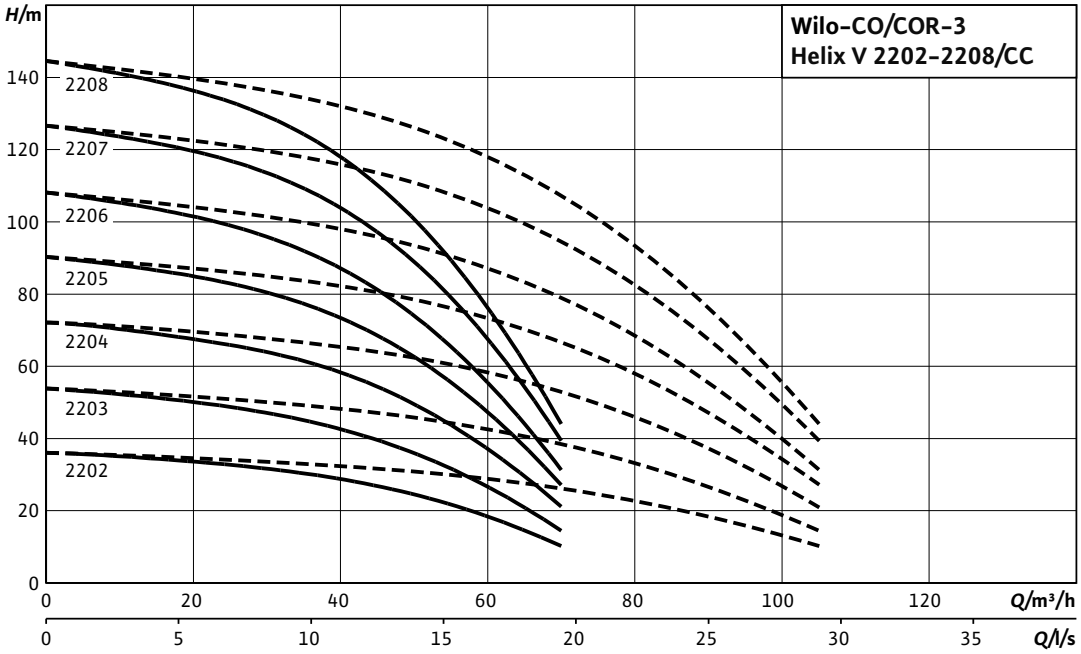

---- including standby pump

Motor data per pump

Wilo-Comfort CO(R)-3Helix...	Nominal motor power	Nominal current 3~400 V, 50 Hz	Motor efficiency		
	P_2	I_N	$\eta_{m\ 50\%}$	$\eta_{m\ 75\%}$	$\eta_{m\ 100\%}$
	kW	A	%		
Helix V 2202/K/CC	3	4.4	82.5	85.0	84.6
Helix V 2203/K/CC	4	7.7	85.0	85.8	85.8
Helix V 2204/K/CC	5.5	10.1	85.2	86.9	88.1
Helix V 2205/K/CC	7.5	13.5	88.5	89.9	89.5
Helix V 2206/K/CC	7.5	13.5	88.5	89.9	89.5
Helix V 2207/K/CC	9	16.3	86.6	88.4	88.8
Helix V 2208/K/CC	11	19.8	87.5	89.3	89.4

Motor efficiency based on 400 V, 50 Hz

Technical data Wilo-Comfort CO-/COR-Helix V.../CC

Dimension drawing

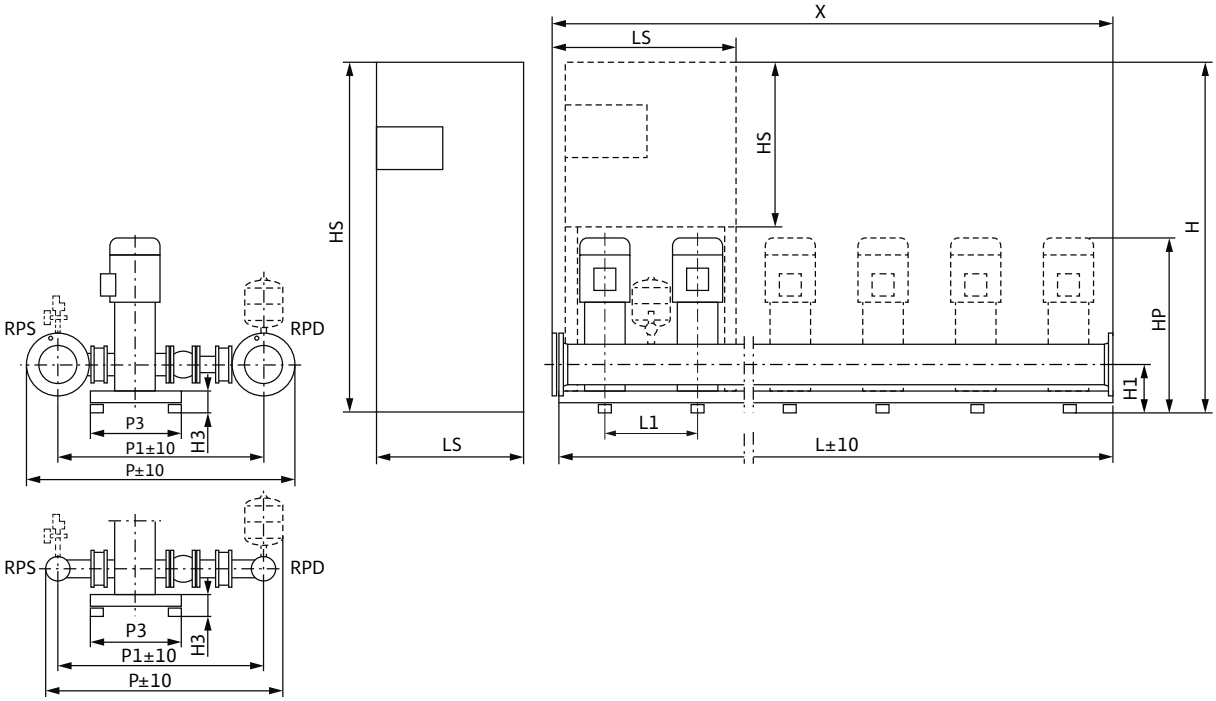

Sample systems are shown. Switchbox position depends on pump height.
Accessories (to be ordered separately): Optional WMS low-water cut-out switchgear kit
Installation surface: flat and horizontal
Installation location: dry, well ventilated and frost-proof

Dimensions, weights

Wilo-Comfort CO(R)-3Helix...	Nominal diameters of the pipe connections on suction side	Nominal diameters of pipe connections on the pressure side	Dimensions																Weight approx.	
											CO	COR	CO	COR	CO	COR	CO	COR	CO	COR
	RPS	*RPD*	*H1*	*H3*	*HP*	*L1*	*P*	*P1*	*P3*	*X*	*H*		*HS*		*L*		*LS*		*m*	
			mm																kg	
Helix V 2202/K/CC	DN 100	DN 100	215	125	968	500	1245	1025	500	1500	1905	1905	600	760	1580	1580	600	600	442	454
Helix V 2203/K/CC	DN 100	DN 100	215	125	1063	500	1245	1025	500	1500	1905	1905	600	760	1580	1580	600	600	462	475
Helix V 2204/K/CC	DN 100	DN 100	215	125	1252	500	1245	1025	500	1500	1905	–	760	1900	2080	1580	600	800	694	684
Helix V 2205/K/CC	DN 100	DN 100	215	125	1337	500	1245	1025	500	1500	1905	–	760	1900	2080	1580	600	800	720	710
Helix V 2206/K/CC	DN 100	DN 100	215	125	1387	500	1245	1025	500	1500	1905	–	760	1900	2080	1580	600	800	725	715
Helix V 2207/K/CC	DN 100	DN 100	215	125	1437	500	1245	1025	500	1500	–	–	1900	1900	1580	1580	600	1000	747	810
Helix V 2208/K/CC	DN 100	DN 100	215	125	1598	500	1245	1025	500	1500	–	–	1900	1900	1580	1580	600	1000	846	909

Technical data Wilo-Comfort CO-/COR-Helix V.../CC

Pump curves

Wilo-Comfort CO(R) -4 Helix V 2202-2208/CC

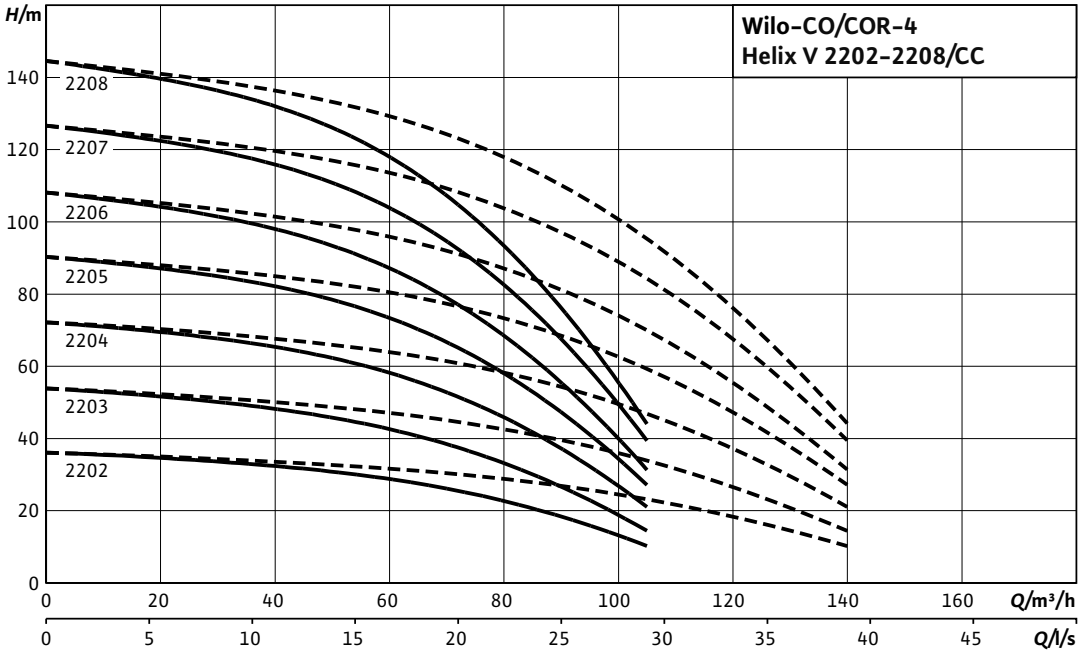

---- including standby pump

Motor data per pump

Wilo-Comfort CO(R)-4Helix...	Nominal motor power	Nominal current 3~400 V, 50 Hz	Motor efficiency		
	P_2	I_N	$\eta_{m\ 50\%}$	$\eta_{m\ 75\%}$	$\eta_{m\ 100\%}$
	kW	A	%		
Helix V 2202/K/CC	3	4.4	82.5	85.0	84.6
Helix V 2203/K/CC	4	7.7	85.0	85.8	85.8
Helix V 2204/K/CC	5.5	10.1	85.2	86.9	88.1
Helix V 2205/K/CC	7.5	13.5	88.5	89.9	89.5
Helix V 2206/K/CC	7.5	13.5	88.5	89.9	89.5
Helix V 2207/K/CC	9	16.3	86.6	88.4	88.8
Helix V 2208/K/CC	11	19.8	87.5	89.3	89.4

Motor efficiency based on 400 V, 50 Hz

Technical data Wilo-Comfort CO-/COR-Helix V.../CC

Dimension drawing

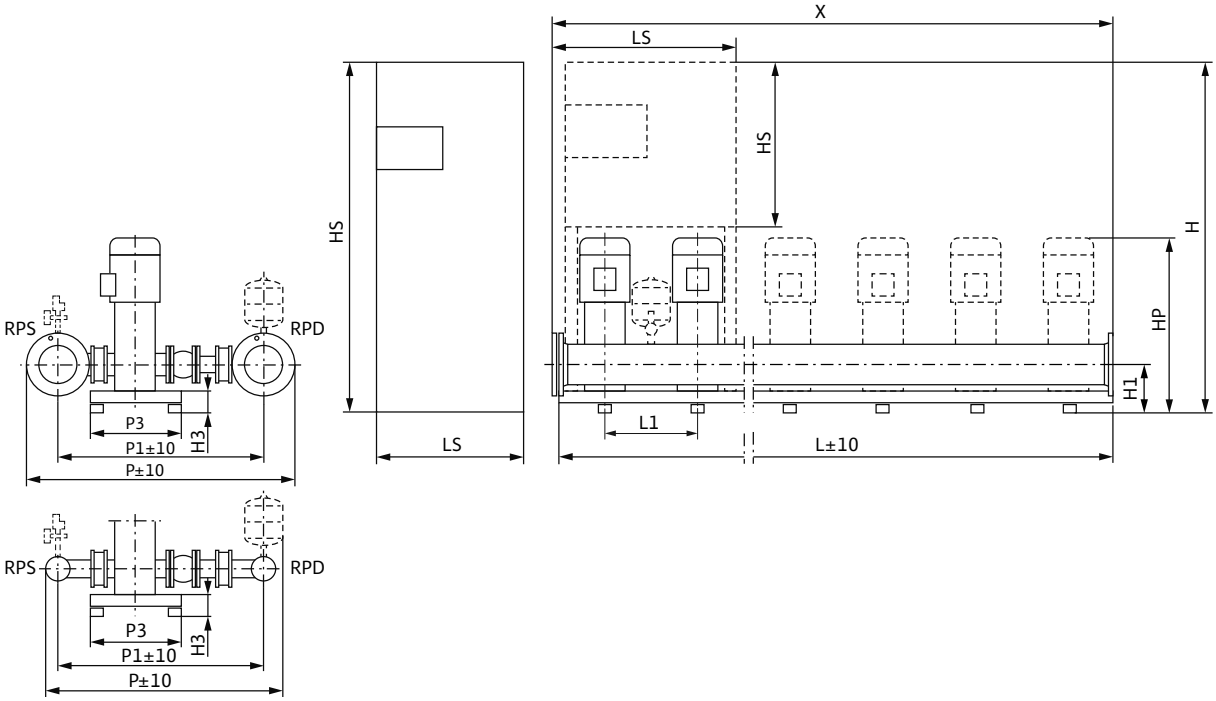

Sample systems are shown. Switchbox position depends on pump height.
Accessories (to be ordered separately): Optional WMS low-water cut-out switchgear kit
Installation surface: flat and horizontal
Installation location: dry, well ventilated and frost-proof

Dimensions, weights

Wilo-Comfort CO(R)-4Helix...	Nominal diameters of the pipe connections on suction side	Nominal diameters of pipe connections on the pressure side	Dimensions																Weight approx.	
											CO	COR	CO	COR	CO	COR	CO	COR	CO	COR
	RPS	*RPD*	*H1*	*H3*	*HP*	*L1*	*P*	*P1*	*P3*	*X*	*H*		*HS*		*L*		*LS*		*m*	
			mm																kg	
Helix V 2202/K/CC	DN 125	DN 125	215	125	968	500	1300	1050	500	2000	1905	1905	600	760	2080	2080	600	600	585	598
Helix V 2203/K/CC	DN 125	DN 125	215	125	1063	500	1300	1050	500	2000	1905	1905	600	760	2080	2080	600	600	613	625
Helix V 2204/K/CC	DN 125	DN 125	215	125	1252	500	1300	1050	500	2000	–	–	1900	1900	2080	2080	600	800	841	866
Helix V 2205/K/CC	DN 125	DN 125	215	125	1337	500	1300	1050	500	2000	–	–	1900	1900	2080	2080	600	800	875	900
Helix V 2206/K/CC	DN 125	DN 125	215	125	1387	500	1300	1050	500	2000	–	–	1900	1900	2080	2080	600	800	882	907
Helix V 2207/K/CC	DN 125	DN 125	215	125	1437	500	1300	1050	500	2000	–	–	1900	1900	2080	2080	600	1000	943	1006
Helix V 2208/K/CC	DN 125	DN 125	215	125	1598	500	1300	1050	500	2000	–	–	1900	1900	2080	2080	600	1000	1075	1138

Technical data Wilo-Comfort CO-/COR-Helix V.../CC

Pump curves

Wilo-Comfort CO(R) -5 Helix V 2202-2208/CC

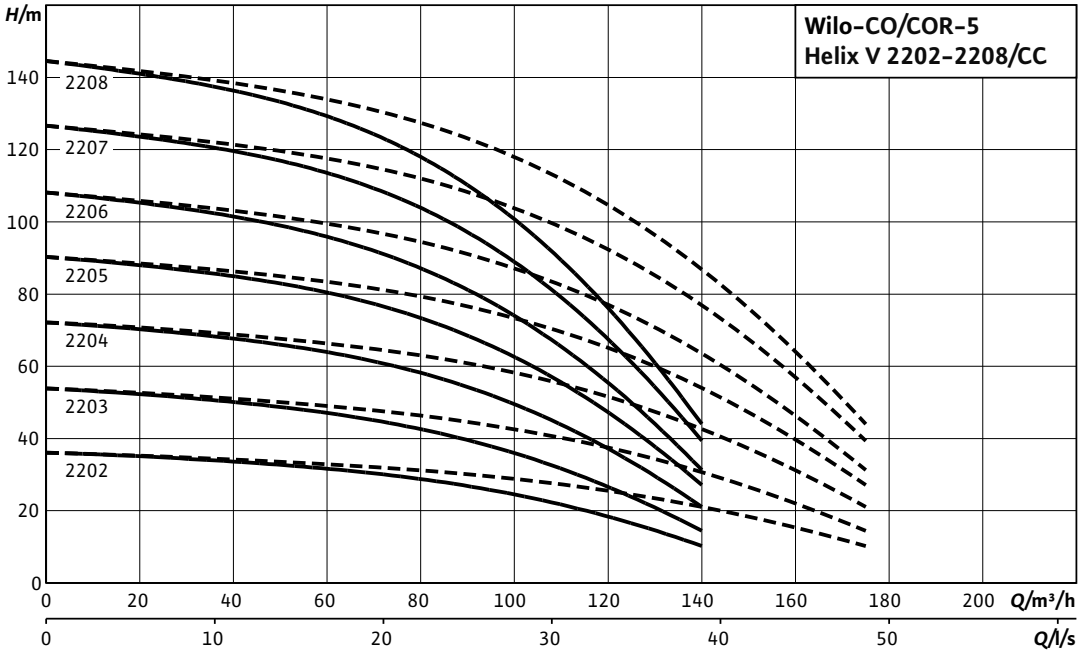

---- including standby pump

Motor data per pump

Wilo-Comfort CO(R)-5Helix...	Nominal motor power	Nominal current 3~400 V, 50 Hz	Motor efficiency		
	P_2	I_N	$\eta_{m\ 50\%}$	$\eta_{m\ 75\%}$	$\eta_{m\ 100\%}$
	kW	A	%		
Helix V 2202/K/CC	3	4.4	82.5	85.0	84.6
Helix V 2203/K/CC	4	7.7	85.0	85.8	85.8
Helix V 2204/K/CC	5.5	10.1	85.2	86.9	88.1
Helix V 2205/K/CC	7.5	13.5	88.5	89.9	89.5
Helix V 2206/K/CC	7.5	13.5	88.5	89.9	89.5
Helix V 2207/K/CC	9	16.3	86.6	88.4	88.8
Helix V 2208/K/CC	11	19.8	87.5	89.3	89.4

Motor efficiency based on 400 V, 50 Hz

Technical data Wilo-Comfort CO-/COR-Helix V.../CC

Dimension drawing

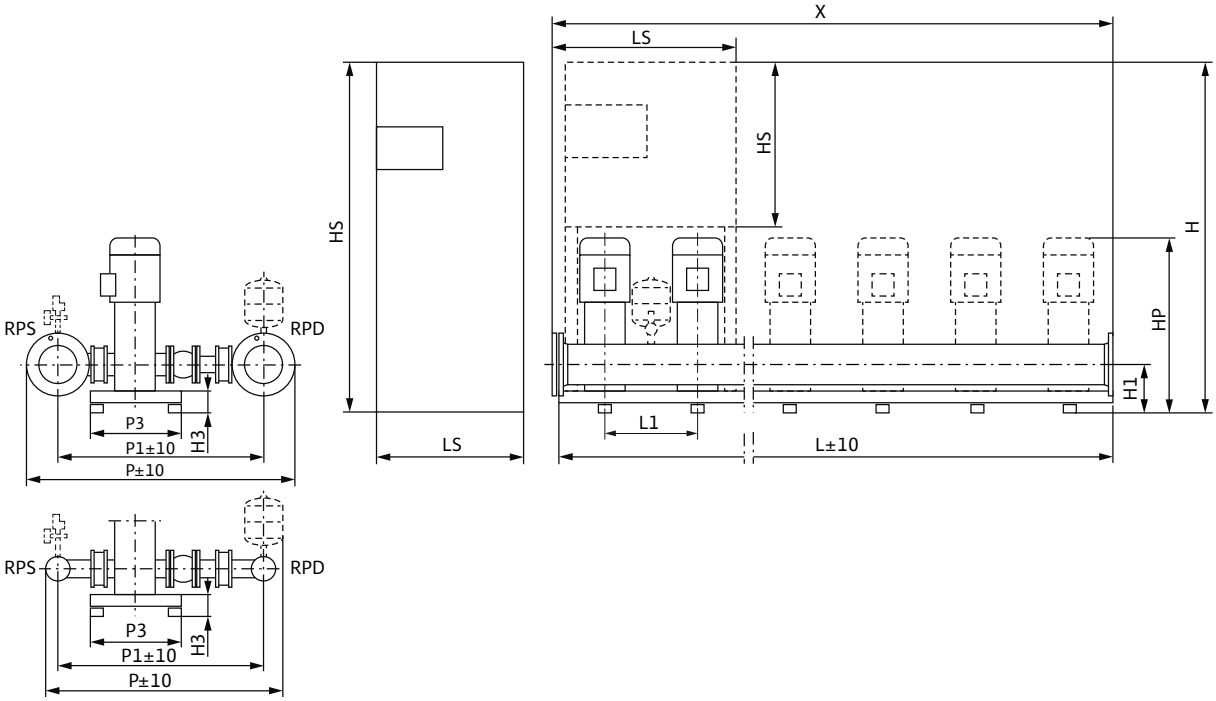

Sample systems are shown. Switchbox position depends on pump height.
Accessories (to be ordered separately): Optional WMS low-water cut-out switchgear kit
Installation surface: flat and horizontal
Installation location: dry, well ventilated and frost-proof

Dimensions, weights

Wilo-Comfort CO(R)-5Helix...	Nominal diameters of the pipe connections on suction side	Nominal diameters of pipe connections on the pressure side	Dimensions																Weight approx.	
											CO	COR	CO	COR	CO	COR	CO	COR	CO	COR
	RPS	*RPD*	*H1*	*H3*	*HP*	*L1*	*P*	*P1*	*P3*	*X*	*H*		*HS*		*L*		*LS*		*m*	
			mm																kg	
Helix V 2202/K/CC	DN 125	DN 125	215	125	968	500	1300	1050	500	2500	1905	1905	600	760	2580	2580	600	760	737	751
Helix V 2203/K/CC	DN 125	DN 125	215	125	1063	500	1300	1050	500	2500	1905	1905	600	760	2580	2580	600	760	771	785
Helix V 2204/K/CC	DN 125	DN 125	215	125	1252	500	1300	1050	500	2500	–	–	1900	1900	2580	2580	800	1000	1037	1062
Helix V 2205/K/CC	DN 125	DN 125	215	125	1337	500	1300	1050	500	2500	–	–	1900	1900	2580	2580	800	1000	1078	1103
Helix V 2206/K/CC	DN 125	DN 125	215	125	1387	500	1300	1050	500	2500	–	–	1900	1900	2580	2580	800	1000	1087	1112
Helix V 2207/K/CC	DN 125	DN 125	215	125	1437	500	1300	1050	500	2500	–	–	1900	1900	2580	2580	800	1000	1130	1193
Helix V 2208/K/CC	DN 125	DN 125	215	125	1598	500	1300	1050	500	2500	–	–	1900	1900	2580	2580	800	1000	1296	1359

Technical data Wilo-Comfort CO-/COR-Helix V.../CC

Pump curves

Wilo-Comfort CO(R) -6 Helix V 2202-2208/CC

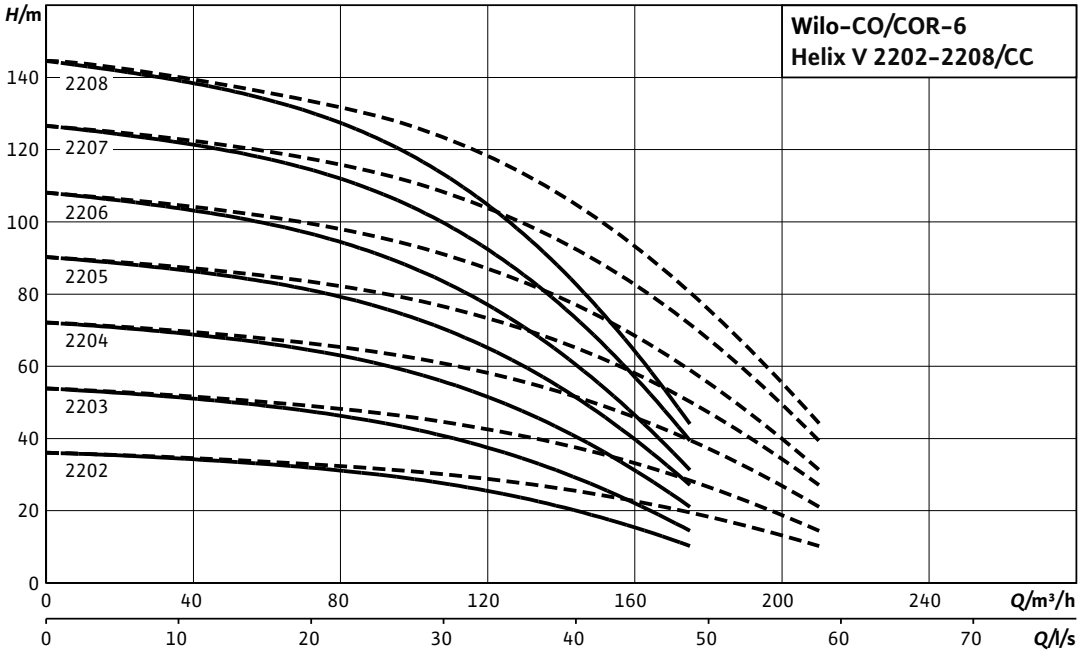

---- including standby pump

Motor data per pump

Wilo-Comfort CO(R)-6Helix...	Nominal motor power	Nominal current 3~400 V, 50 Hz	Motor efficiency		
	P_2	I_N	$\eta_{m\ 50\%}$	$\eta_{m\ 75\%}$	$\eta_{m\ 100\%}$
	kW	A	%		
Helix V 2202/K/CC	3	4.4	82.5	85.0	84.6
Helix V 2203/K/CC	4	7.7	85.0	85.8	85.8
Helix V 2204/K/CC	5.5	10.1	85.2	86.9	88.1
Helix V 2205/K/CC	7.5	13.5	88.5	89.9	89.5
Helix V 2206/K/CC	7.5	13.5	88.5	89.9	89.5
Helix V 2207/K/CC	9	16.3	86.6	88.4	88.8
Helix V 2208/K/CC	11	19.8	87.5	89.3	89.4

Motor efficiency based on 400 V, 50 Hz

Technical data Wilo-Comfort CO-/COR-Helix V.../CC

Dimension drawing

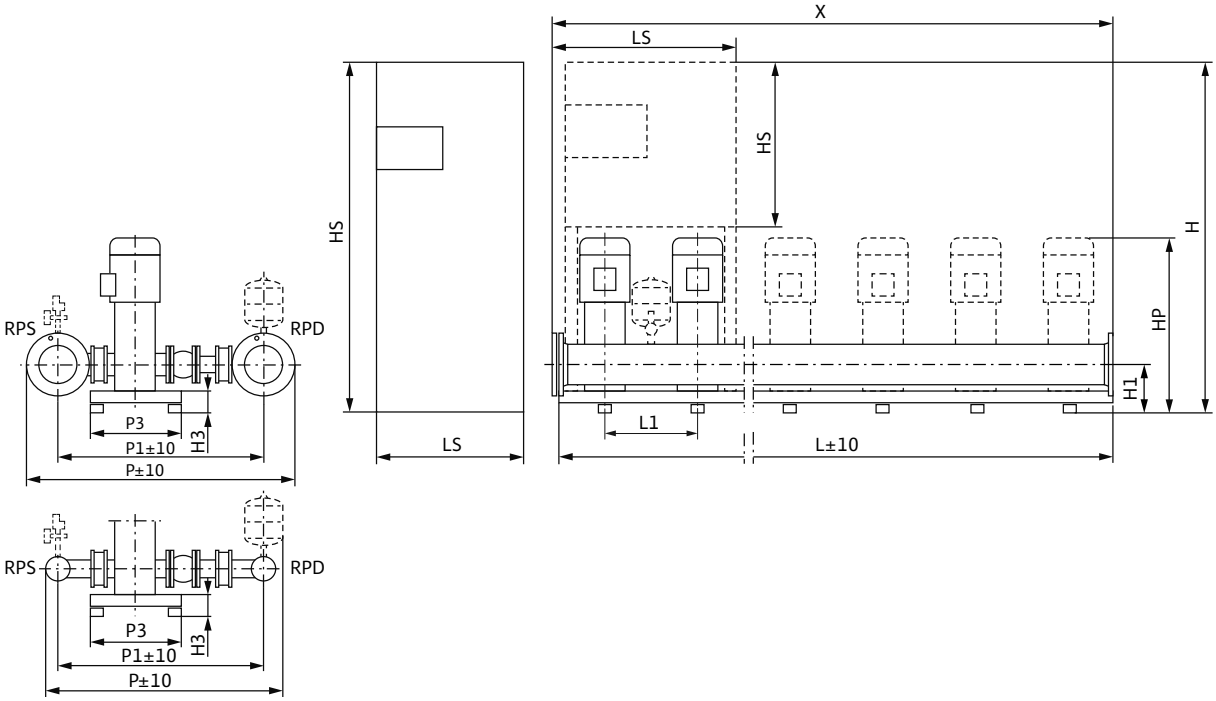

Sample systems are shown. Switchbox position depends on pump height.
Accessories (to be ordered separately): Optional WMS low-water cut-out switchgear kit
Installation surface: flat and horizontal
Installation location: dry, well ventilated and frost-proof

Dimensions, weights

Wilo-Comfort CO(R)-6Helix...	Nominal diameters of the pipe connections on suction side	Nominal diameters of pipe connections on the pressure side	Dimensions																Weight approx.	
											CO	COR	CO	COR	CO	COR	CO	COR	CO	COR
	RPS	*RPD*	*H1*	*H3*	*HP*	*L1*	*P*	*P1*	*P3*	*X*	*H*		*HS*		*L*		*LS*		*m*	
			mm																kg	
Helix V 2202/K/CC	DN 125	DN 125	215	125	968	500	1300	1050	500	3000	1905	1905	600	760	3080	3000	600	760	836	848
Helix V 2203/K/CC	DN 125	DN 125	215	125	1063	500	1300	1050	500	3000	1905	1905	600	760	3080	3000	600	760	877	889
Helix V 2204/K/CC	DN 125	DN 125	215	125	1252	500	1300	1050	500	3000	–	–	1900	1900	3080	3000	800	1000	1207	1232
Helix V 2205/K/CC	DN 125	DN 125	215	125	1337	500	1300	1050	500	3000	–	–	1900	1900	3080	3000	800	1000	1256	1281
Helix V 2206/K/CC	DN 125	DN 125	215	125	1387	500	1300	1050	500	3000	–	–	1900	1900	3080	3000	800	1000	1267	1292
Helix V 2207/K/CC	DN 125	DN 125	215	125	1437	500	1300	1050	500	3000	–	–	1900	1900	3080	3000	800	1000	1281	1344
Helix V 2208/K/CC	DN 125	DN 125	215	125	1598	500	1300	1050	500	3000	–	–	1900	1900	3080	3000	800	1000	1481	1544

Technical data Wilo-Comfort CO-/COR-Helix V.../CC

Pump curves

Wilo-Comfort CO(R) -2 Helix V 3602-3606/CC

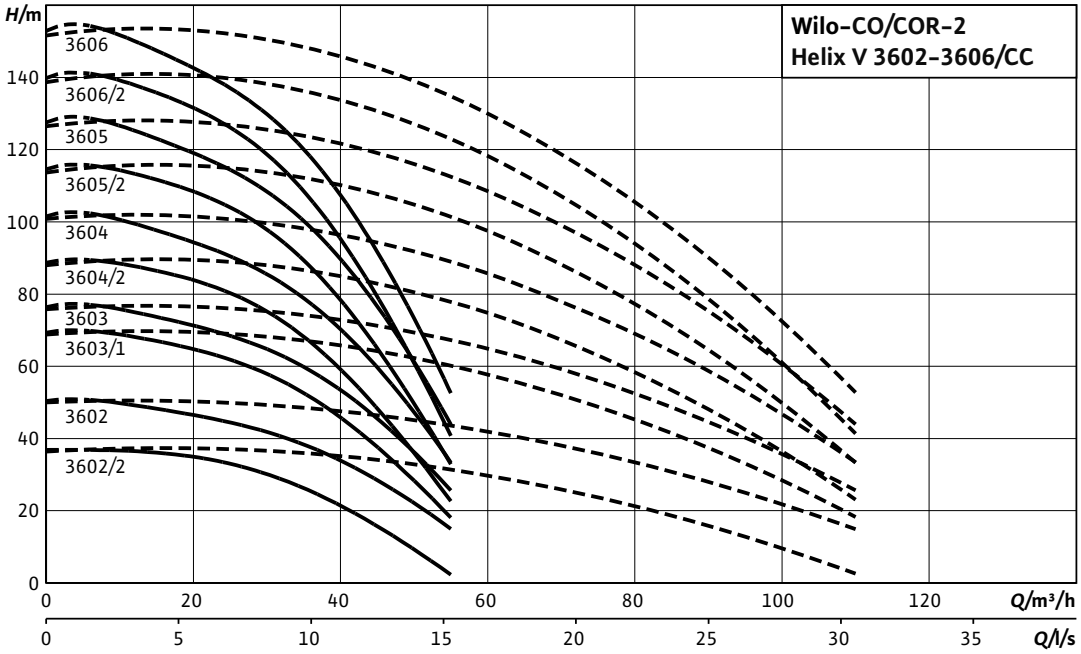

---- including standby pump

Motor data per pump

Wilo-Comfort CO(R)-2 Helix...	Nominal motor power	Nominal current 3~400 V, 50 Hz	Motor efficiency		
	P_2	I_N	$\eta_{m\ 50\%}$	$\eta_{m\ 75\%}$	$\eta_{m\ 100\%}$
	kW	A	%		
Helix V 3602/2/K/CC	4	7.5	85.0	85.8	85.8
Helix V 3602/K/CC	5.5	10.1	85.2	86.9	88.1
Helix V 3603/1/K/CC	7.5	13.5	88.5	89.9	89.5
Helix V 3603/K/CC	9	16.3	86.6	88.4	88.8
Helix V 3604/K/CC	11	20	87.5	89.3	89.4
Helix V 3605/K/CC	15	26.2	88.4	90.2	90.3
Helix V 3606/2/K/CC	15	26.2	88.4	90.2	90.3
Helix V 3604/2/K/CC	11	20	87.5	89.3	89.4
Helix V 3605/2/K/CC	15	26.2	88.4	90.2	90.3
Helix V 3606/K/CC	18.5	32	89.0	90.8	90.9

Motor efficiency based on 400 V, 50 Hz

Technical data Wilo-Comfort CO-/COR-Helix V.../CC

Dimension drawing

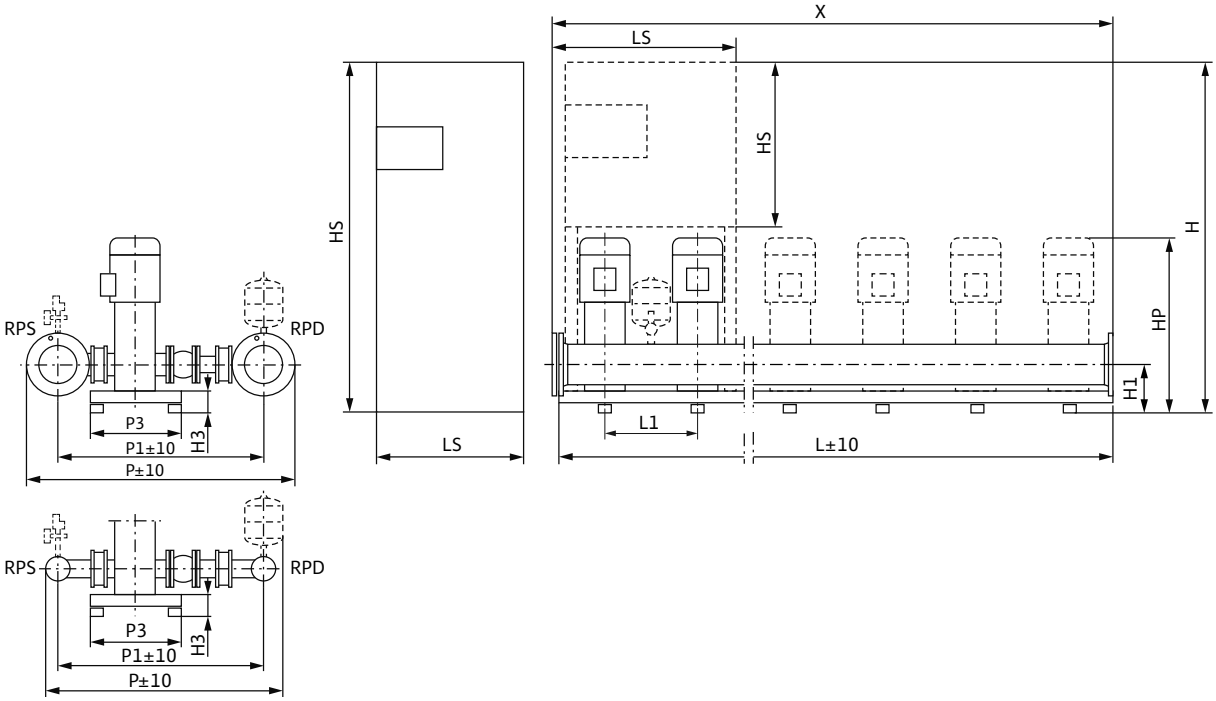

Sample systems are shown. Switchbox position depends on pump height.
Accessories (to be ordered separately): Optional WMS low-water cut-out switchgear kit
Installation surface: flat and horizontal
Installation location: dry, well ventilated and frost-proof

Dimensions, weights

Wilo-Comfort CO(R)-2 Helix...	Nominal diameters of the pipe connections on suction side	Nominal diameters of pipe connections on the pressure side	Dimensions																Weight approx.	
											CO	COR	CO	COR	CO	COR	CO	COR	CO	COR
	RPS	*RPD*	*H1*	*H3*	*HP*	*L1*	*P*	*P1*	*P3*	*X*	*H*		*HS*		*L*		*LS*		*m*	
			mm																kg	
Helix V 3602/2/K/CC	DN 100	DN 100	227	122	1056	500	1250	1030	500	1000	1905	1905	600	760	1080	1080	600	600	354	371
Helix V 3602/K/CC	DN 100	DN 100	227	122	1197	500	1250	1030	500	1000	1905	–	760	1900	1080	1080	600	600	424	529
Helix V 3603/1/K/CC	DN 100	DN 100	227	122	1299	500	1250	1030	500	1000	1905	–	760	1900	1580	1080	600	600	442	547
Helix V 3603/K/CC	DN 100	DN 100	227	122	1299	500	1250	1030	500	1000	1905	–	760	1900	1580	1080	600	800	442	579
Helix V 3604/K/CC	DN 100	DN 100	227	122	1476	500	1250	1030	500	1000	1905	–	760	1900	1580	1080	600	800	514	651
Helix V 3605/K/CC	DN 100	DN 100	227	122	1543	500	1250	1030	500	1000	1905	–	760	1900	1580	1080	600	800	542	696
Helix V 3606/2/K/CC	DN 100	DN 100	227	122	1610	500	1250	1030	500	1000	1905	–	760	1900	1580	1080	600	800	548	702
Helix V 3604/2/K/CC	DN 100	DN 100	227	122	1476	500	1250	1030	500	1000	1905	–	760	1900	1580	1080	600	800	514	651
Helix V 3605/2/K/CC	DN 100	DN 100	227	122	1543	500	1250	1030	500	1000	1905	–	760	1900	1580	1080	600	800	542	696
Helix V 3606/K/CC	DN 100	DN 100	227	122	1610	500	1250	1030	500	1000	1905	–	760	1900	1580	1080	600	800	571	737

Technical data Wilo-Comfort CO-/COR-Helix V.../CC

Pump curves

Wilo-Comfort CO(R) -3 Helix V 3602-3606/CC

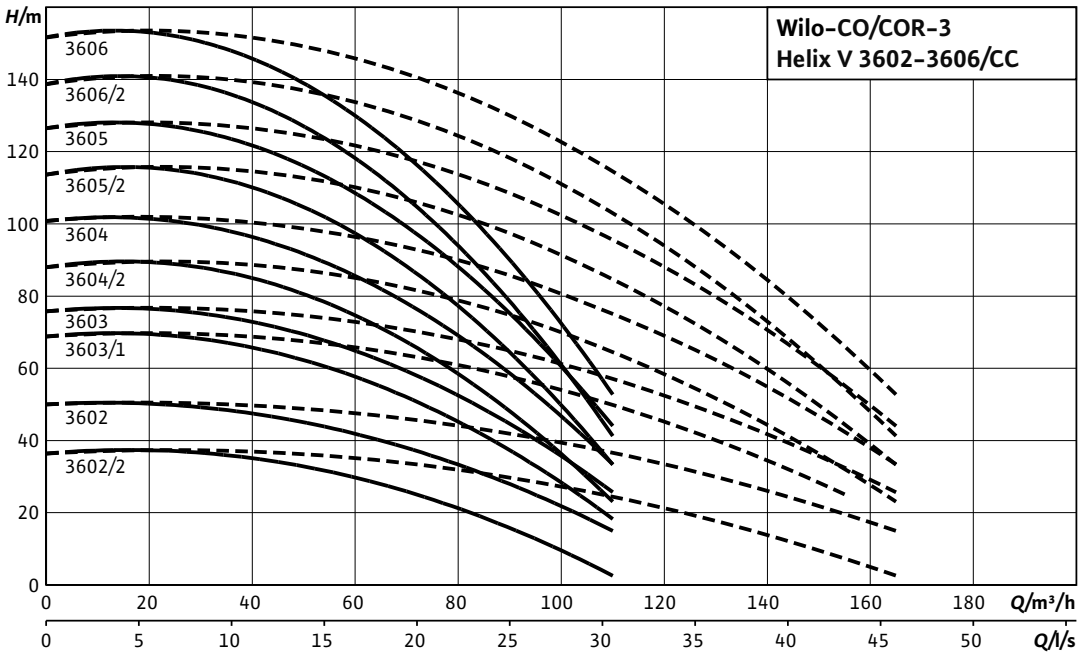

---- including standby pump

Motor data per pump

Wilo-Comfort CO(R)-3Helix...	Nominal motor power	Nominal current 3~400 V, 50 Hz	Motor efficiency		
	P_2	I_N	$\eta_{m\ 50\%}$	$\eta_{m\ 75\%}$	$\eta_{m\ 100\%}$
	kW	A	%		
Helix V 3602/2/K/CC	4	7.5	85.0	85.8	85.8
Helix V 3602/K/CC	5.5	10.1	85.2	86.9	88.1
Helix V 3603/1/K/CC	7.5	13.5	88.5	89.9	89.5
Helix V 3603/K/CC	9	16.3	86.6	88.4	88.8
Helix V 3604/2/K/CC	11	20	87.5	89.3	89.4
Helix V 3604/K/CC	11	20	87.5	89.3	89.4
Helix V 3605/2/K/CC	15	26.2	88.4	90.2	90.3
Helix V 3605/K/CC	15	26.2	88.4	90.2	90.3
Helix V 3606/2/K/CC	15	26.2	88.4	90.2	90.3
Helix V 3606/K/CC	18.5	32	89.0	90.8	90.9
Helix V 3606/2/K/CC	15	26.2	88.4	90.2	90.3

Motor efficiency based on 400 V, 50 Hz

Technical data Wilo-Comfort CO-/COR-Helix V.../CC

Dimension drawing

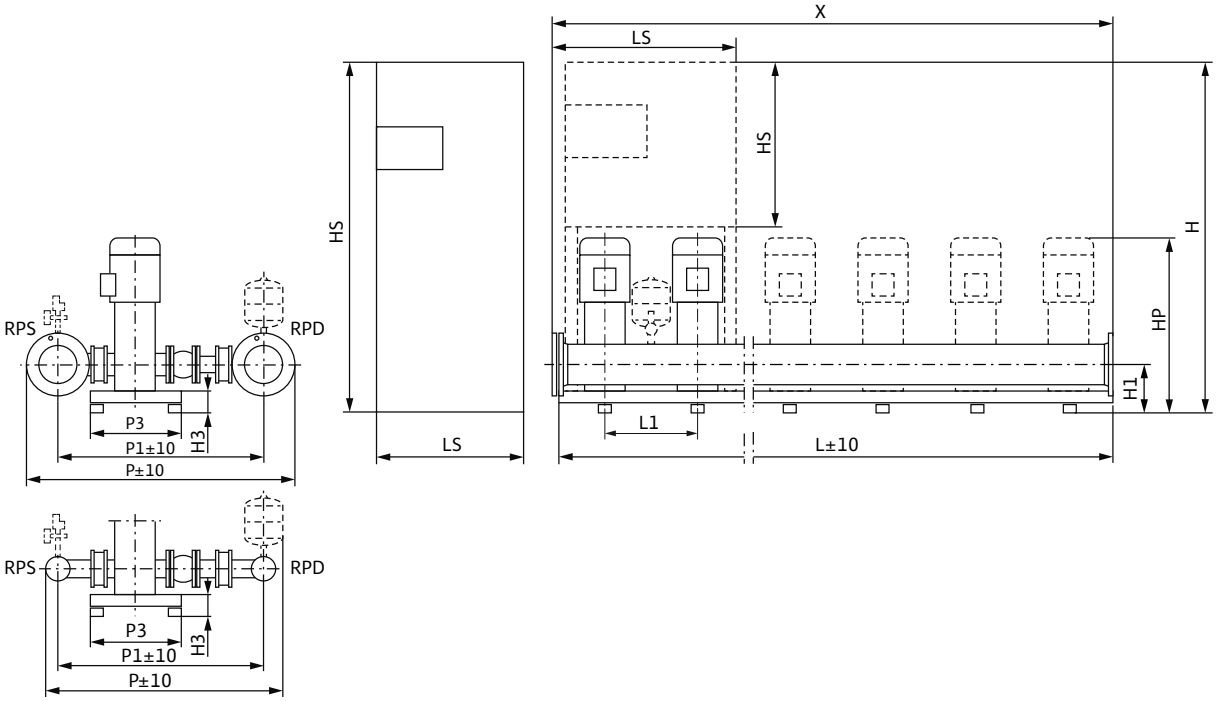

Sample systems are shown. Switchbox position depends on pump height.
Accessories (to be ordered separately): Optional WMS low-water cut-out switchgear kit
Installation surface: flat and horizontal
Installation location: dry, well ventilated and frost-proof

Dimensions, weights

Wilo-Comfort CO(R)-3Helix...	Nominal diameters of the pipe connections on suction side	Nominal diameters of pipe connections on the pressure side	Dimensions																Weight approx.	
											CO	COR	CO	COR	CO	COR	CO	COR	CO	COR
	RPS	*RPD*	*H1*	*H3*	*HP*	*L1*	*P*	*P1*	*P3*	*X*	*H*		*HS*		*L*		*LS*		*m*	
			mm																kg	
Helix V 3602/2/K/CC	DN 125	DN 125	227	122	1056	500	1307	1057	500	1500	1905	1905	600	760	1580	1580	600	600	515	350
Helix V 3602/K/CC	DN 125	DN 125	227	122	1197	500	1307	1057	500	1500	1905	–	760	1900	1580	1580	600	800	613	741
Helix V 3603/1/K/CC	DN 125	DN 125	227	122	1299	500	1307	1057	500	1500	1905	–	760	1900	2080	1580	600	800	640	772
Helix V 3603/K/CC	DN 125	DN 125	227	122	1299	500	1307	1057	500	1500	–	–	1900	1900	1580	1580	600	1000	724	793
Helix V 3604/2/K/CC	DN 125	DN 125	227	122	1476	500	1307	1057	500	1500	–	–	1900	1900	1580	1580	600	1000	832	901
Helix V 3604/K/CC	DN 125	DN 125	227	122	1476	500	1307	1057	500	1500	–	–	1900	1900	1580	1580	600	1000	832	901
Helix V 3605/2/K/CC	DN 125	DN 125	227	122	1543	500	1307	1057	500	1500	–	–	1900	1900	1580	1580	600	1000	878	960
Helix V 3605/K/CC	DN 125	DN 125	227	122	1543	500	1307	1057	500	1500	–	–	1900	1900	1580	1580	600	1000	878	960
Helix V 3606/2/K/CC	DN 125	DN 125	227	122	1610	500	1307	1057	500	1500	–	–	1900	1900	1580	1580	600	1000	887	969
Helix V 3606/K/CC	DN 125	DN 125	227	122	1610	500	1307	1057	500	1500	–	–	1900	1900	1580	1580	600	1000	918	1006

Technical data Wilo-Comfort CO-/COR-Helix V.../CC

Pump curves

Wilo-Comfort CO(R) -4 Helix V 3602-3606/CC

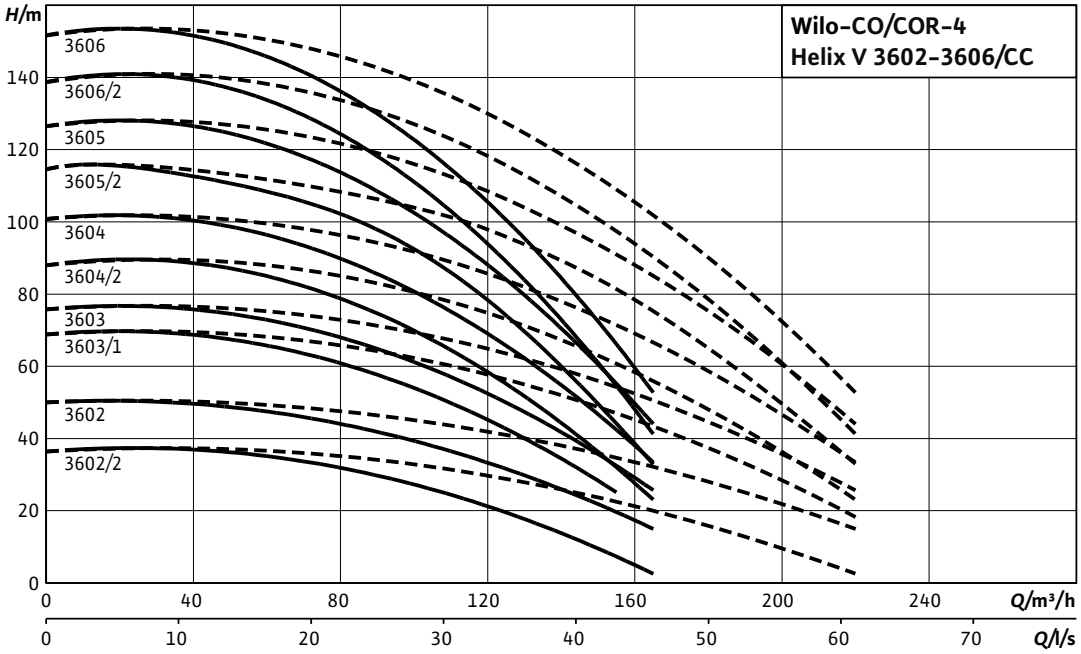

---- including standby pump

Motor data per pump

Wilo-Comfort CO(R)-4Helix...	Nominal motor power	Nominal current 3~400 V, 50 Hz	Motor efficiency		
	P_2	I_N	$\eta_{m\ 50\%}$	$\eta_{m\ 75\%}$	$\eta_{m\ 100\%}$
	kW	A	%		
Helix V 3602/2/K/CC	4	7.5	85.0	85.8	85.8
Helix V 3602/K/CC	5.5	10.1	85.2	86.9	88.1
Helix V 3603/1/K/CC	7.5	13.5	88.5	89.9	89.5
Helix V 3603/K/CC	9	16.3	86.6	88.4	88.8
Helix V 3604/2/K/CC	11	20	87.5	89.3	89.4
Helix V 3604/K/CC	11	20	87.5	89.3	89.4
Helix V 3605/2/K/CC	15	26.2	88.4	90.2	90.3
Helix V 3605/K/CC	15	26.2	88.4	90.2	90.3
Helix V 3606/2/K/CC	15	26.2	88.4	90.2	90.3
Helix V 3606/K/CC	18.5	32	89.0	90.8	90.9

Motor efficiency based on 400 V, 50 Hz

Technical data Wilo-Comfort CO-/COR-Helix V.../CC

Dimension drawing

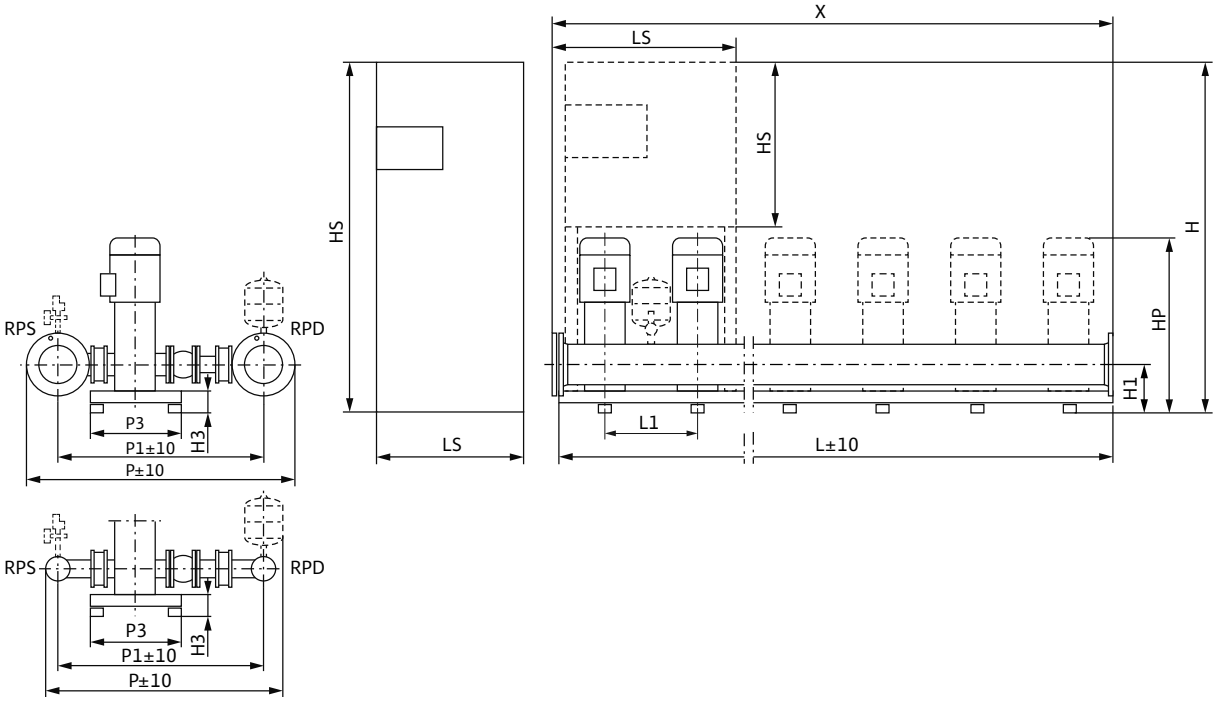

Sample systems are shown. Switchbox position depends on pump height.
Accessories (to be ordered separately): Optional WMS low-water cut-out switchgear kit
Installation surface: flat and horizontal
Installation location: dry, well ventilated and frost-proof

Dimensions, weights

Wilo-Comfort CO(R)-4Helix...	Nominal diameters of the pipe connections on suction side	Nominal diameters of pipe connections on the pressure side	Dimensions																Weight approx.	
											CO	COR	CO	COR	CO	COR	CO	COR	CO	COR
	RPS	*RPD*	*H1*	*H3*	*HP*	*L1*	*P*	*P1*	*P3*	*X*	*H*		*HS*		*L*		*LS*		*m*	
			mm																kg	
Helix V 3602/2/K/CC	DN 150	DN 150	227	122	1056	500	1369	1084	500	2000	1905	1905	600	760	2080	2080	600	600	680	695
Helix V 3602/K/CC	DN 150	DN 150	227	122	1197	500	1369	1084	500	2000	–	–	1900	1900	2080	2080	600	800	880	936
Helix V 3603/1/K/CC	DN 150	DN 150	227	122	1299	500	1369	1084	500	2000	–	–	1900	1900	2080	2080	600	800	916	972
Helix V 3603/K/CC	DN 150	DN 150	227	122	1299	500	1369	1084	500	2000	–	–	1900	1900	2080	2080	600	1000	934	1003
Helix V 3604/2/K/CC	DN 150	DN 150	227	122	1476	500	1369	1084	500	2000	–	–	1900	1900	2080	2080	600	1000	1078	1147
Helix V 3604/K/CC	DN 150	DN 150	227	122	1476	500	1369	1084	500	2000	–	–	1900	1900	2080	2080	600	1000	1078	1147
Helix V 3605/2/K/CC	DN 150	DN 150	227	122	1543	500	1369	1084	500	2000	–	–	1900	1900	2080	2080	600	1000	1138	1220
Helix V 3605/K/CC	DN 150	DN 150	227	122	1543	500	1369	1084	500	2000	–	–	1900	1900	2080	2080	600	1000	1138	1220
Helix V 3606/2/K/CC	DN 150	DN 150	227	122	1610	500	1369	1084	500	2000	–	–	1900	1900	2080	2080	600	1000	1150	1232
Helix V 3606/K/CC	DN 150	DN 150	227	122	1610	500	1369	1084	500	2000	–	–	1900	1900	2080	2080	600	1000	1190	1274

Technical data Wilo-Comfort CO-/COR-Helix V.../CC

Pump curves

Wilo-Comfort CO(R) -5 Helix V 3602-3606/CC

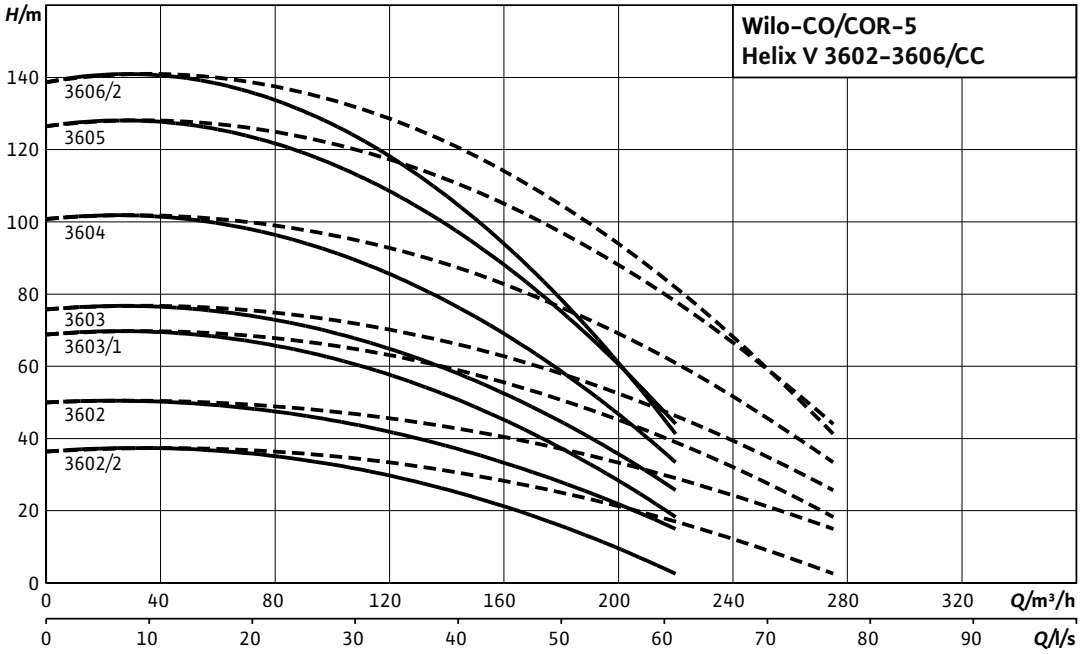

---- including standby pump

Motor data per pump

Wilo-Comfort CO(R)-5Helix...	Nominal motor power	Nominal current 3~400 V, 50 Hz	Motor efficiency		
	P_2	I_N	$\eta_{m\ 50\%}$	$\eta_{m\ 75\%}$	$\eta_{m\ 100\%}$
	kW	A	%		
Helix V 3602/2/K/CC	4	7.5	85.0	85.8	85.8
Helix V 3602/K/CC	5.5	10.1	85.2	86.9	88.1
Helix V 3603/1/K/CC	7.5	13.5	88.5	89.9	89.5
Helix V 3603/K/CC	9	16.3	86.6	88.4	88.8
Helix V 3604/2/K/CC	11	20	87.5	89.3	89.4
Helix V 3604/K/CC	11	20	87.5	89.3	89.4
Helix V 3605/2/K/CC	15	26.2	88.4	90.2	90.3
Helix V 3605/K/CC	15	26.2	88.4	90.2	90.3
Helix V 3606/2/K/CC	15	26.2	88.4	90.2	90.3
Helix V 3606/K/CC	18.5	32	89.0	90.8	90.9

Motor efficiency based on 400 V, 50 Hz

Technical data Wilo-Comfort CO-/COR-Helix V.../CC

Dimension drawing

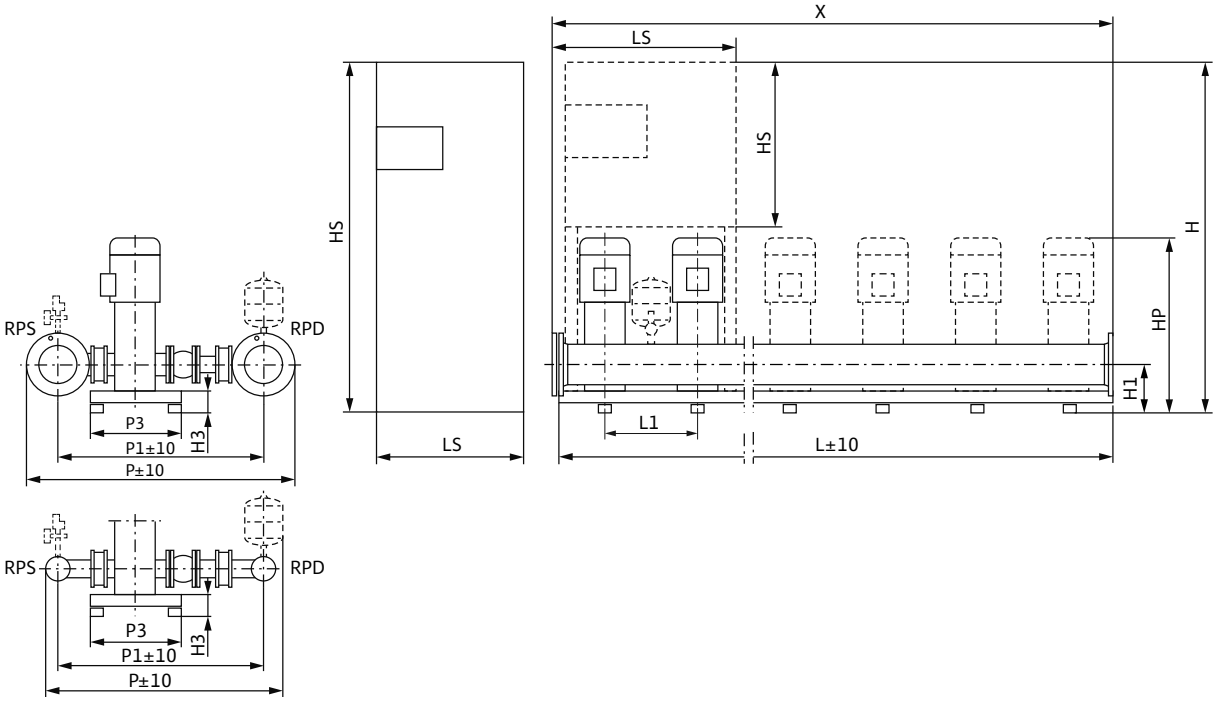

Sample systems are shown. Switchbox position depends on pump height.
Accessories (to be ordered separately): Optional WMS low-water cut-out switchgear kit
Installation surface: flat and horizontal
Installation location: dry, well ventilated and frost-proof

Dimensions, weights

Wilo-Comfort CO(R)-5Helix...	Nominal diameters of the pipe connections on suction side	Nominal diameters of pipe connections on the pressure side	Dimensions																Weight approx.	
											CO	COR	CO	COR	CO	COR	CO	COR	CO	COR
	RPS	*RPD*	*H1*	*H3*	*HP*	*L1*	*P*	*P1*	*P3*	*X*	*H*		*HS*		*L*		*LS*		*m*	
			mm																kg	
Helix V 3602/2/K/CC	DN 150	DN 150	227	122	1056	500	1369	1084	500	2500	1905	1905	600	760	2580	2580	600	760	807	835
Helix V 3602/K/CC	DN 150	DN 150	227	122	1197	500	1369	1084	500	2500	–	–	1900	1900	2580	2580	800	1000	1093	1118
Helix V 3603/1/K/CC	DN 150	DN 150	227	122	1299	500	1369	1084	500	2500	–	–	1900	1900	2580	2580	800	1000	1141	1166
Helix V 3603/K/CC	DN 150	DN 150	227	122	1299	500	1369	1084	500	2500	–	–	1900	1900	2580	2580	800	1000	1175	1238
Helix V 3604/2/K/CC	DN 150	DN 150	227	122	1476	500	1369	1084	500	2500	–	–	1900	1900	2580	2580	800	1000	1355	1418
Helix V 3604/K/CC	DN 150	DN 150	227	122	1476	500	1369	1084	500	2500	–	–	1900	1900	2580	2580	800	1000	1355	1418
Helix V 3605/2/K/CC	DN 150	DN 150	227	122	1543	500	1369	1084	500	2500	–	–	1900	1900	2580	2580	800	1200	1431	1783
Helix V 3605/K/CC	DN 150	DN 150	227	122	1543	500	1369	1084	500	2500	–	–	1900	1900	2580	2580	800	1200	1431	1498
Helix V 3606/2/K/CC	DN 150	DN 150	227	122	1610	500	1369	1084	500	2500	–	–	1900	1900	2580	2580	800	1200	1446	1513
Helix V 3606/K/CC	DN 150	DN 150	227	122	1610	500	1369	1084	500	2500	–	–	1900	1900	2580	2580	800	1800	1496	835

Technical data Wilo-Comfort CO-/COR-Helix V.../CC

Pump curves

Wilo-Comfort CO(R) -6 Helix V 3602-3606/CC

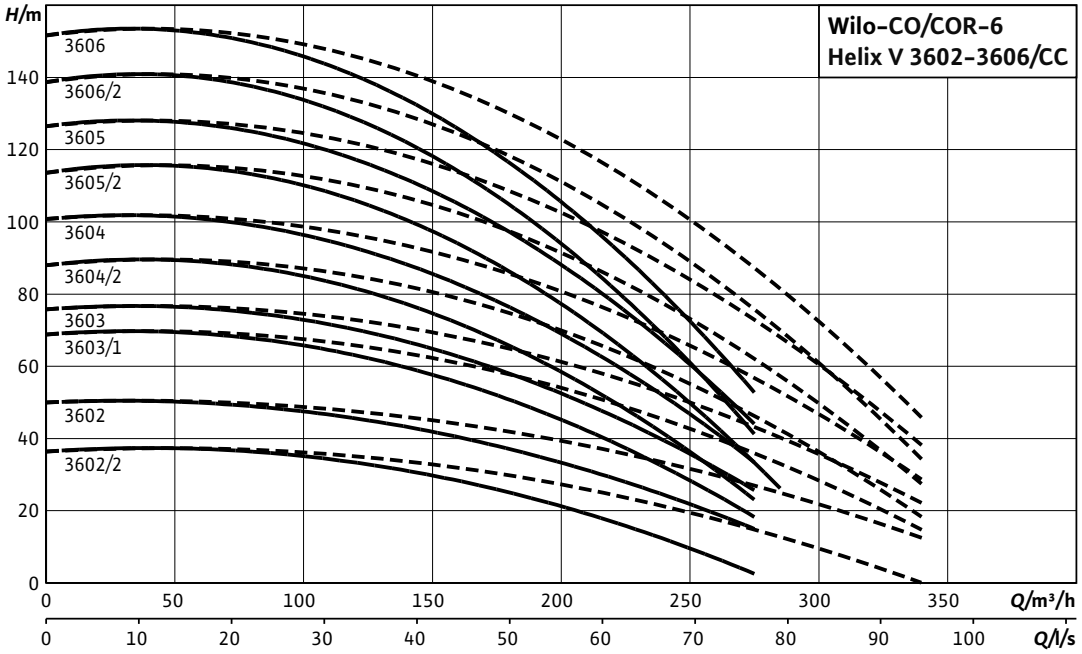

---- including standby pump

Motor data per pump

Wilo-Comfort CO(R)-6Helix...	Nominal motor power	Nominal current 3~400 V, 50 Hz	Motor efficiency		
	P_2	I_N	$\eta_{m\ 50\%}$	$\eta_{m\ 75\%}$	$\eta_{m\ 100\%}$
	kW	A	%		
Helix V 3602/2/K/CC	4	7.5	85.0	85.8	85.8
Helix V 3602/K/CC	5.5	10.1	85.2	86.9	88.1
Helix V 3603/1/K/CC	7.5	13.5	88.5	89.9	89.5
Helix V 3603/K/CC	9	16.3	86.6	88.4	88.8
Helix V 3604/2/K/CC	11	20	87.5	89.3	89.4
Helix V 3604/K/CC	11	20	87.5	89.3	89.4
Helix V 3605/2/K/CC	15	26.2	88.4	90.2	90.3
Helix V 3605/K/CC	15	26.2	88.4	90.2	90.3
Helix V 3606/2/K/CC	15	26.2	88.4	90.2	90.3
Helix V 3606/K/CC	18.5	32	89.0	90.8	90.9

Motor efficiency based on 400 V, 50 Hz

Technical data Wilo-Comfort CO-/COR-Helix V.../CC

Dimension drawing

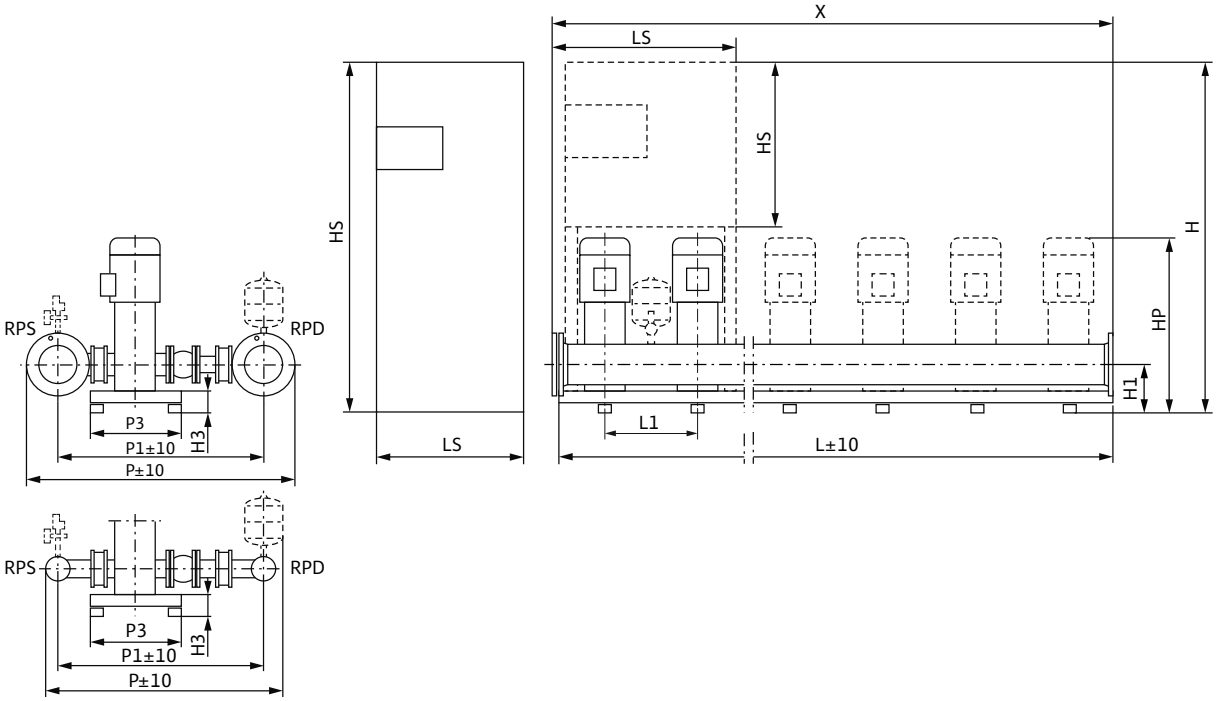

Sample systems are shown. Switchbox position depends on pump height.
Accessories (to be ordered separately): Optional WMS low-water cut-out switchgear kit
Installation surface: flat and horizontal
Installation location: dry, well ventilated and frost-proof

Dimensions, weights

Wilo-Comfort CO(R)-6Helix...	Nominal diameters of the pipe connections on suction side	Nominal diameters of pipe connections on the pressure side	Dimensions																Weight approx.	
											CO	COR	CO	COR	CO	COR	CO	COR	CO	COR
	RPS	*RPD*	*H1*	*H3*	*HP*	*L1*	*P*	*P1*	*P3*	*X*	*H*		*HS*		*L*		*LS*		*m*	
			mm																kg	
Helix V 3602/2/K/CC	DN 150	DN 150	227	122	1056	500	1369	1084	500	3000	1905	1905	600	760	3000	3000	600	760	931	959
Helix V 3602/K/CC	DN 150	DN 150	227	122	1197	500	1369	1084	500	3000	–	–	1900	1900	3000	3000	800	1000	1250	1275
Helix V 3603/1/K/CC	DN 150	DN 150	227	122	1299	500	1369	1084	500	3000	–	–	1900	1900	3000	3000	800	1000	1307	1334
Helix V 3603/K/CC	DN 150	DN 150	227	122	1299	500	1369	1084	500	3000	–	–	1900	1900	3000	3000	800	1000	1441	1404
Helix V 3604/2/K/CC	DN 150	DN 150	227	122	1476	500	1369	1084	500	3000	–	–	1900	1900	3000	3000	800	1000	1657	1620
Helix V 3604/K/CC	DN 150	DN 150	227	122	1476	500	1369	1084	500	3000	–	–	1900	1900	3000	3000	800	1000	1657	1620
Helix V 3605/2/K/CC	DN 150	DN 150	227	122	1543	500	1369	1084	500	3000	–	–	1900	1900	3000	3000	800	1200	1647	1714
Helix V 3605/K/CC	DN 150	DN 150	227	122	1543	500	1369	1084	500	3000	–	–	1900	1900	3000	3000	800	1200	1647	1714
Helix V 3606/2/K/CC	DN 150	DN 150	227	122	1610	500	1369	1084	500	3000	–	–	1900	1900	3000	3000	800	1200	1665	1732
Helix V 3606/K/CC	DN 150	DN 150	227	122	1610	500	1369	1084	500	3000	–	–	1900	1900	3000	3000	800	1800	1725	2012

Technical data Wilo-Comfort CO-/COR-Helix V.../CC

Pump curves

Wilo-Comfort CO(R) -2 Helix V 5202-5206/CC

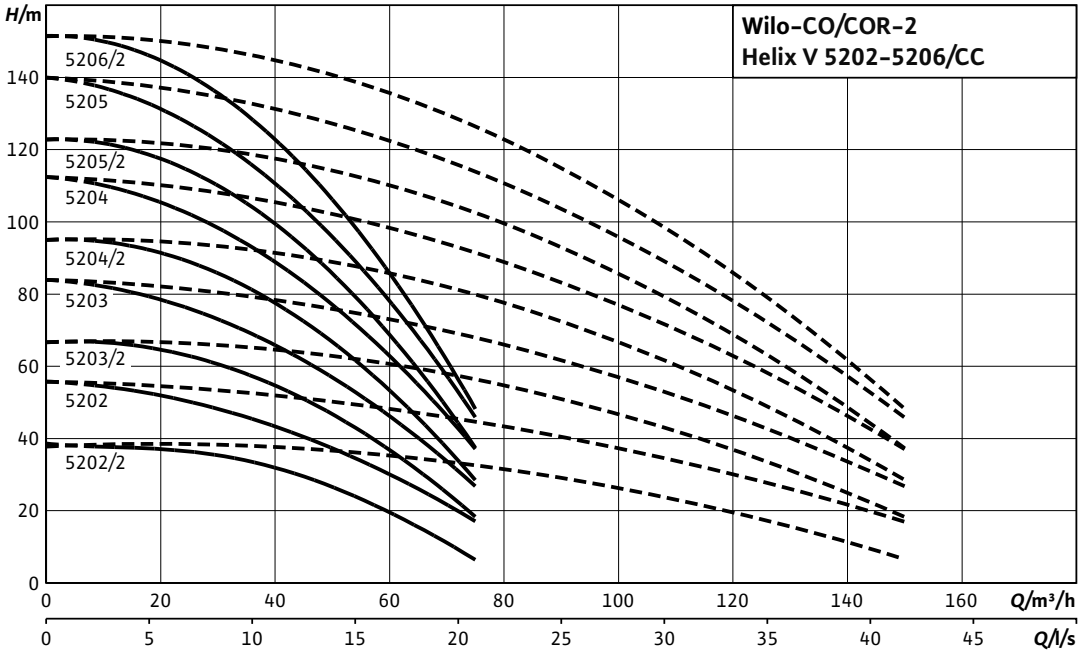

---- including standby pump

Motor data per pump

Wilo-Comfort CO(R)-2 Helix...	Nominal motor power	Nominal current 3~400 V, 50 Hz	Motor efficiency		
	P_2	I_N	$\eta_{m\ 50\%}$	$\eta_{m\ 75\%}$	$\eta_{m\ 100\%}$
	kW	A	%		
Helix V 5202/2/K/CC	5.5	10.1	85.2	86.9	88.1
Helix V 5202/K/CC	7.5	13.5	88.5	89.9	89.5
Helix V 5203/2/K/CC	11	20	87.5	89.3	89.4
Helix V 5203/K/CC	11	20	87.5	89.3	89.4
Helix V 5204/2/K/CC	15	26.2	88.4	90.2	90.3
Helix V 5204/K/CC	15	26.2	88.4	90.2	90.3
Helix V 5205/2/K/CC	18.5	32	89.0	90.8	90.9
Helix V 5205/K/CC	18.5	32	89.0	90.8	90.9
Helix V 5206/2/K/CC	22	38	89.5	90.9	91.3

Motor efficiency based on 400 V, 50 Hz

Technical data Wilo-Comfort CO-/COR-Helix V.../CC

Dimension drawing

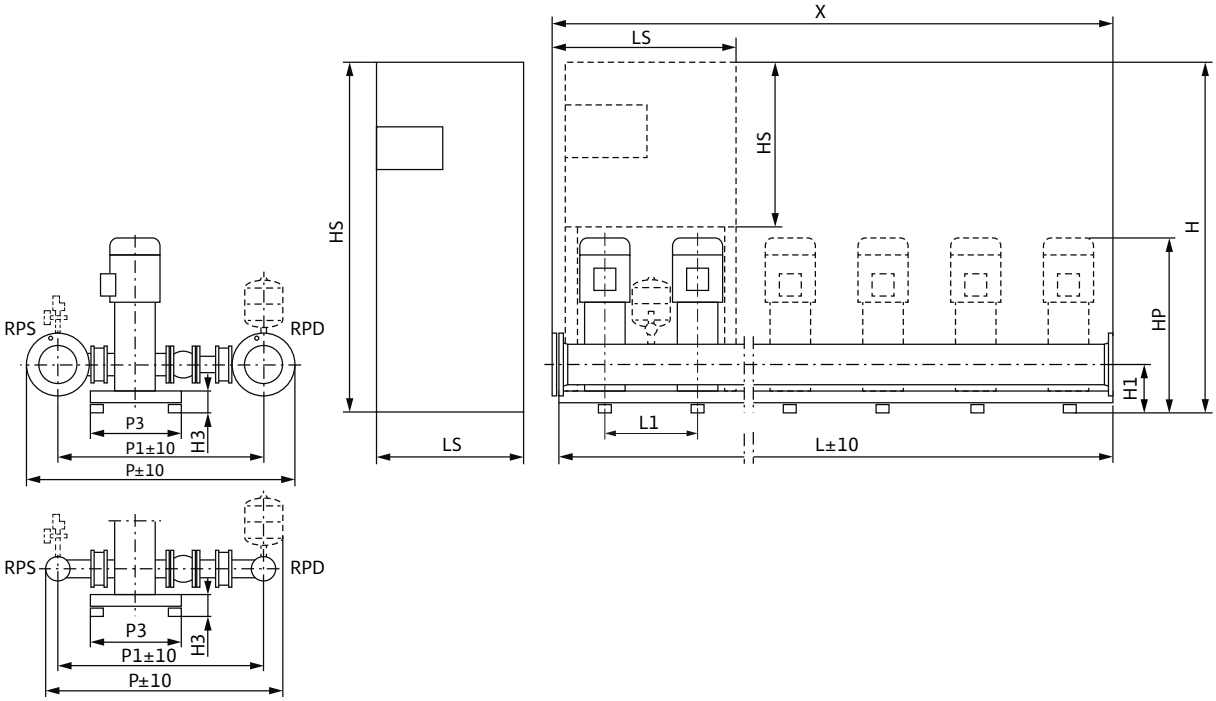

Sample systems are shown. Switchbox position depends on pump height.
Accessories (to be ordered separately): Optional WMS low-water cut-out switchgear kit
Installation surface: flat and horizontal
Installation location: dry, well ventilated and frost-proof

Dimensions, weights

Wilo-Comfort CO(R)-2 Helix...	Nominal diameters of the pipe connections on suction side	Nominal diameters of pipe connections on the pressure side	Dimensions																Weight approx.	
											CO	COR	CO	COR	CO	COR	CO	COR	CO	COR
	RPS	*RPD*	*H1*	*H3*	*HP*	*L1*	*P*	*P1*	*P3*	*X*	*H*		*HS*		*L*		*LS*		*m*	
			mm																kg	
Helix V 5202/2/K/CC	DN 125	DN 125	262	122	1266	500	1286	1036	500	1000	1905	–	760	1900	1580	1080	600	600	497	603
Helix V 5202/K/CC	DN 125	DN 125	262	122	1266	500	1286	1036	500	1000	1905	–	760	1900	1580	1080	600	600	511	616
Helix V 5203/2/K/CC	DN 125	DN 125	262	122	1511	500	1286	1036	500	1000	1905	–	760	1900	1580	1080	600	800	582	719
Helix V 5203/K/CC	DN 125	DN 125	262	122	1511	500	1286	1036	500	1000	1905	–	760	1900	1580	1080	600	800	582	719
Helix V 5204/2/K/CC	DN 125	DN 125	262	122	1611	500	1286	1036	500	1000	1905	–	760	1900	1580	1080	600	800	614	768
Helix V 5204/K/CC	DN 125	DN 125	262	122	1611	500	1286	1036	500	1000	1905	–	760	1900	1580	1080	600	800	614	768
Helix V 5205/2/K/CC	DN 125	DN 125	262	122	1711	500	1286	1036	500	1000	1905	–	760	1900	1580	1080	600	800	643	810
Helix V 5205/K/CC	DN 125	DN 125	262	122	1711	500	1286	1036	500	1000	1905	–	760	1900	1580	1080	600	800	643	810
Helix V 5206/2/K/CC	DN 125	DN 125	262	122	1854	500	1286	1036	500	1000	1905	–	760	1900	1580	1080	600	800	695	861

Technical data Wilo-Comfort CO-/COR-Helix V.../CC

Pump curves

Wilo-Comfort CO(R) -3 Helix V 5202-5206/CC

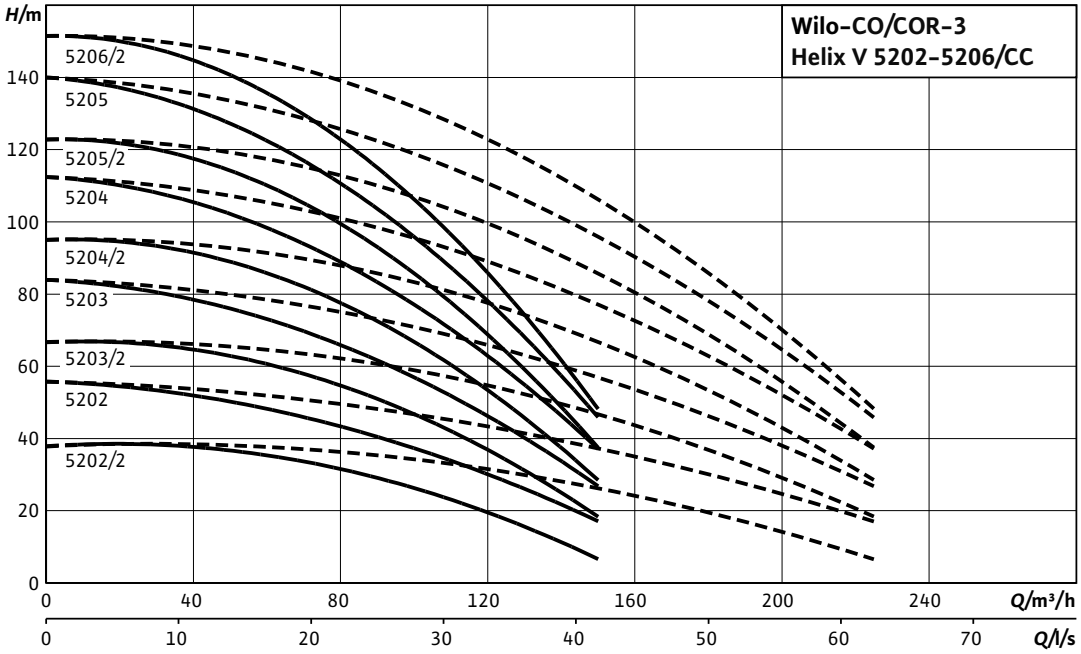

---- including standby pump

Motor data per pump

Wilo-Comfort CO(R)-3Helix...	Nominal motor power	Nominal current 3~400 V, 50 Hz	Motor efficiency		
	P_2	I_N	$\eta_{m\ 50\%}$	$\eta_{m\ 75\%}$	$\eta_{m\ 100\%}$
	kW	A	%		
Helix V 5202/2/K/CC	5.5	10.1	85.2	86.9	88.1
Helix V 5202/K/CC	7.5	13.5	88.5	89.9	89.5
Helix V 5203/2/K/CC	11	20	87.5	89.3	89.4
Helix V 5203/K/CC	11	20	87.5	89.3	89.4
Helix V 5204/2/K/CC	15	26.2	88.4	90.2	90.3
Helix V 5204/K/CC	15	26.2	88.4	90.2	90.3
Helix V 5205/2/K/CC	18.5	32	89.0	90.8	90.9
Helix V 5205/K/CC	18.5	32	89.0	90.8	90.9
Helix V 5206/2/K/CC	22	38	89.5	90.9	91.3

Motor efficiency based on 400 V, 50 Hz

Technical data Wilo-Comfort CO-/COR-Helix V.../CC

Dimension drawing

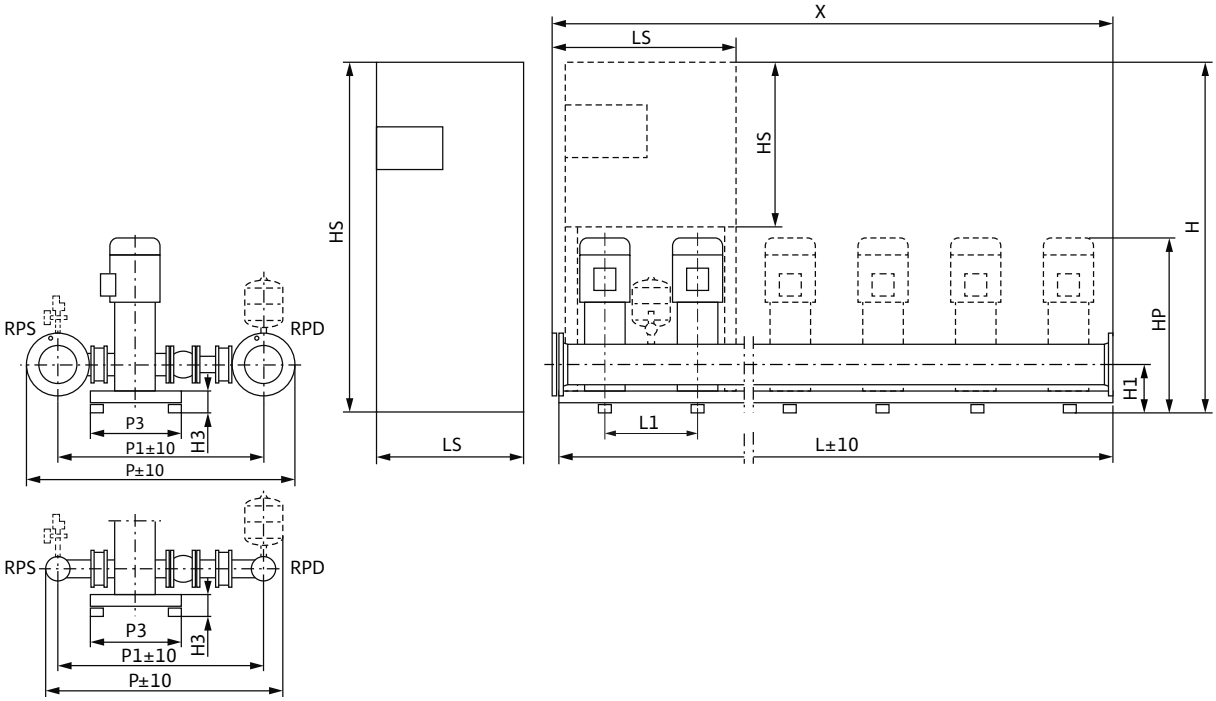

Sample systems are shown. Switchbox position depends on pump height.
Accessories (to be ordered separately): Optional WMS low-water cut-out switchgear kit
Installation surface: flat and horizontal
Installation location: dry, well ventilated and frost-proof

Dimensions, weights

Wilo-Comfort CO(R)-3Helix...	Nominal diameters of the pipe connections on suction side	Nominal diameters of pipe connections on the pressure side	Dimensions																Weight approx.	
											CO	COR	CO	COR	CO	COR	CO	COR	CO	COR
	RPS	*RPD*	*H1*	*H3*	*HP*	*L1*	*P*	*P1*	*P3*	*X*	*H*		*HS*		*L*		*LS*		*m*	
			mm																kg	
Helix V 5202/2/K/CC	DN 150	DN 150	262	122	1266	500	1351	1066	500	1500	1905	–	760	1900	2080	1580	600	800	717	845
Helix V 5202/K/CC	DN 150	DN 150	262	122	1266	500	1351	1066	500	1500	1905	–	760	1900	2080	1580	600	800	737	869
Helix V 5203/2/K/CC	DN 150	DN 150	262	122	1511	500	1351	1066	500	1500	1900	–	1900	1900	1580	1580	600	1000	928	997
Helix V 5203/K/CC	DN 150	DN 150	262	122	1511	500	1351	1066	500	1500	1900	–	1900	1900	1580	1580	600	1000	928	997
Helix V 5204/2/K/CC	DN 150	DN 150	262	122	1611	500	1351	1066	500	1500	1900	–	1900	1900	1580	1580	600	1000	979	1061
Helix V 5204/K/CC	DN 150	DN 150	262	122	1611	500	1351	1066	500	1500	1900	–	1900	1900	1580	1580	600	1000	979	1061
Helix V 5205/2/K/CC	DN 150	DN 150	262	122	1711	500	1351	1066	500	1500	1900	–	1900	1900	1580	1580	600	1000	1021	1109
Helix V 5205/K/CC	DN 150	DN 150	262	122	1711	500	1351	1066	500	1500	1900	–	1900	1900	1580	1580	600	1000	1021	1109
Helix V 3606/2/K/CC	DN 125	DN 125	227	122	1610	500	1307	1057	500	1500	–	–	–	1900	–	1580	–	1000	–	969
Helix V 5206/2/K/CC	DN 150	DN 150	262	122	1854	500	1351	1066	500	1500	1900	–	1900	1900	1580	1580	600	1000	1098	1186

Technical data Wilo-Comfort CO-/COR-Helix V.../CC

Pump curves

Wilo-Comfort CO(R) -4 Helix V 5202-5206/CC

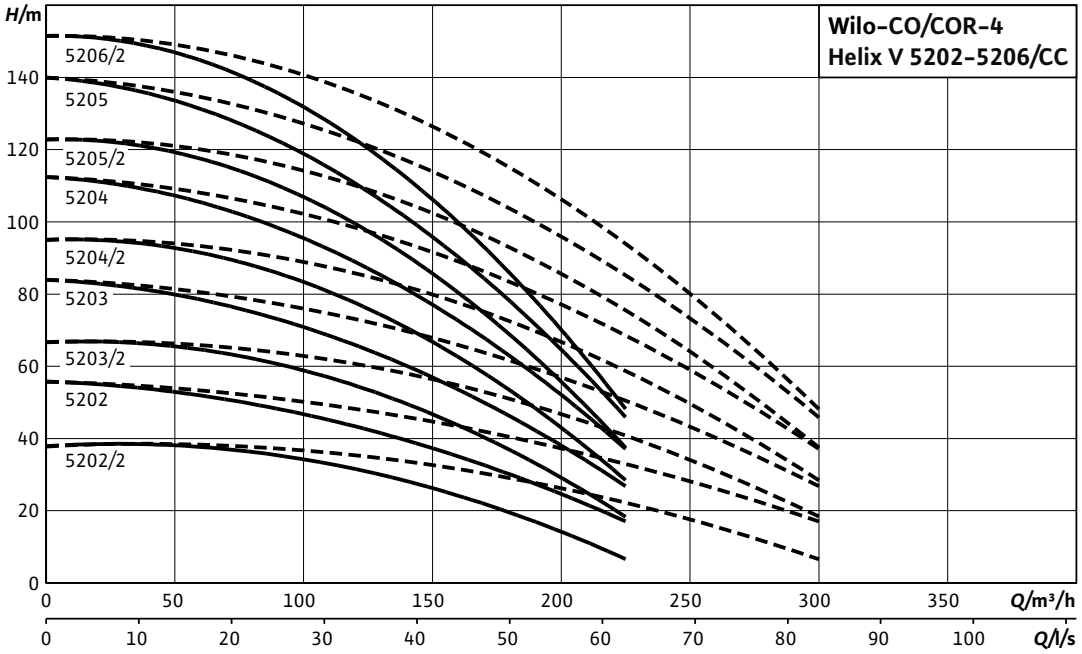

---- including standby pump

Motor data per pump

Wilo-Comfort CO(R)-4Helix...	Nominal motor power	Nominal current 3~400 V, 50 Hz	Motor efficiency		
	P_2	I_N	$\eta_{m\ 50\%}$	$\eta_{m\ 75\%}$	$\eta_{m\ 100\%}$
	kW	A	%		
Helix V 5202/2/K/CC	5.5	10.1	85.2	86.9	88.1
Helix V 5202/K/CC	7.5	13.5	88.5	89.9	89.5
Helix V 5203/2/K/CC	11	20	87.5	89.3	89.4
Helix V 5203/K/CC	11	20	87.5	89.3	89.4
Helix V 5204/2/K/CC	15	26.2	88.4	90.2	90.3
Helix V 5204/K/CC	15	26.2	88.4	90.2	90.3
Helix V 5205/2/K/CC	18.5	32	89.0	90.8	90.9
Helix V 5205/K/CC	18.5	32	89.0	90.8	90.9
Helix V 5206/2/K/CC	22	38	89.5	90.9	91.3

Motor efficiency based on 400 V, 50 Hz

Technical data Wilo-Comfort CO-/COR-Helix V.../CC

Dimension drawing

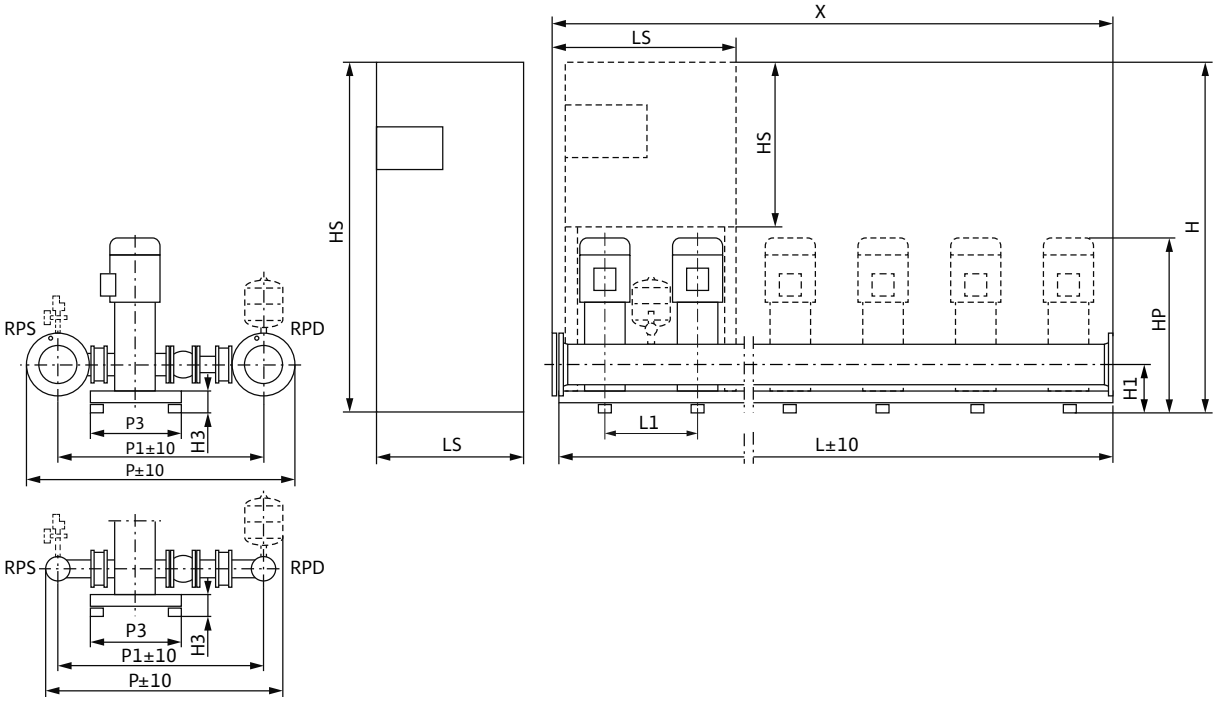

Sample systems are shown. Switchbox position depends on pump height.
Accessories (to be ordered separately): Optional WMS low-water cut-out switchgear kit
Installation surface: flat and horizontal
Installation location: dry, well ventilated and frost-proof

Dimensions, weights

Wilo-Comfort CO(R)-4Helix...	Nominal diameters of the pipe connections on suction side	Nominal diameters of pipe connections on the pressure side	Dimensions																Weight approx.	
											CO	COR	CO	COR	CO	COR	CO	COR	CO	COR
	RPS	*RPD*	*H1*	*H3*	*HP*	*L1*	*P*	*P1*	*P3*	*X*	*H*		*HS*		*L*		*LS*		*m*	
			mm																kg	
Helix V 5202/2/K/CC	DN 200	DN 200	262	122	1266	500	1456	1116	500	2000	1900	–	1900	1900	2080	2080	600	800	1018	1074
Helix V 5202/K/CC	DN 200	DN 200	262	122	1266	500	1456	1116	500	2000	1900	–	1900	1900	2080	2080	600	800	1045	1101
Helix V 5203/2/K/CC	DN 200	DN 200	262	122	1511	500	1456	1116	500	2000	1900	–	1900	1900	2080	2080	600	1000	1205	1274
Helix V 5203/K/CC	DN 200	DN 200	262	122	1511	500	1456	1116	500	2000	1900	–	1900	1900	2080	2080	600	1000	1205	1274
Helix V 5204/2/K/CC	DN 200	DN 200	262	122	1611	500	1456	1116	500	2000	1900	–	1900	1900	2080	2080	600	1000	1272	1354
Helix V 5204/K/CC	DN 200	DN 200	262	122	1611	500	1456	1116	500	2000	1900	–	1900	1900	2080	2080	600	1000	1272	1354
Helix V 5205/2/K/CC	DN 200	DN 200	262	122	1711	500	1456	1116	500	2000	1900	–	1900	1900	2080	2080	600	1000	1327	1411
Helix V 5205/K/CC	DN 200	DN 200	262	122	1711	500	1456	1116	500	2000	1900	–	1900	1900	2080	2080	600	1000	1327	1411
Helix V 5206/2/K/CC	DN 200	DN 200	262	122	1854	500	1456	1116	500	2000	1900	–	1900	1900	2080	2080	600	1000	1429	1513

Technical data Wilo-Comfort CO-/COR-Helix V.../CC

Pump curves

Wilo-Comfort CO(R) -5 Helix V 5202-5206/CC

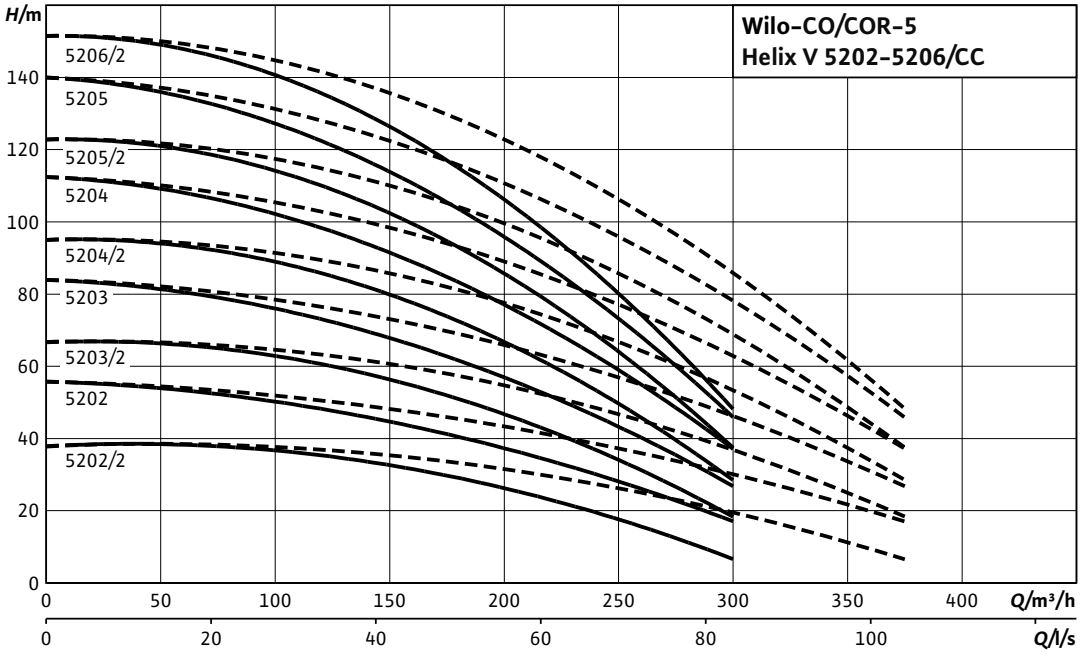

---- including standby pump

Motor data per pump

Wilo-Comfort CO(R)-5Helix...	Nominal motor power	Nominal current 3~400 V, 50 Hz	Motor efficiency		
	P_2	I_N	$\eta_{m\ 50\%}$	$\eta_{m\ 75\%}$	$\eta_{m\ 100\%}$
	kW	A	%		
Helix V 5202/2/K/CC	5.5	10.1	85.2	86.9	88.1
Helix V 5202/K/CC	7.5	13.5	88.5	89.9	89.5
Helix V 5203/2/K/CC	11	20	87.5	89.3	89.4
Helix V 5203/K/CC	11	20	87.5	89.3	89.4
Helix V 5204/2/K/CC	15	26.2	88.4	90.2	90.3
Helix V 5204/K/CC	15	26.2	88.4	90.2	90.3
Helix V 5205/2/K/CC	18.5	32	89.0	90.8	90.9
Helix V 5205/K/CC	18.5	32	89.0	90.8	90.9
Helix V 5206/2/K/CC	22	38	89.5	90.9	91.3

Motor efficiency based on 400 V, 50 Hz

Technical data Wilo-Comfort CO-/COR-Helix V.../CC

Dimension drawing

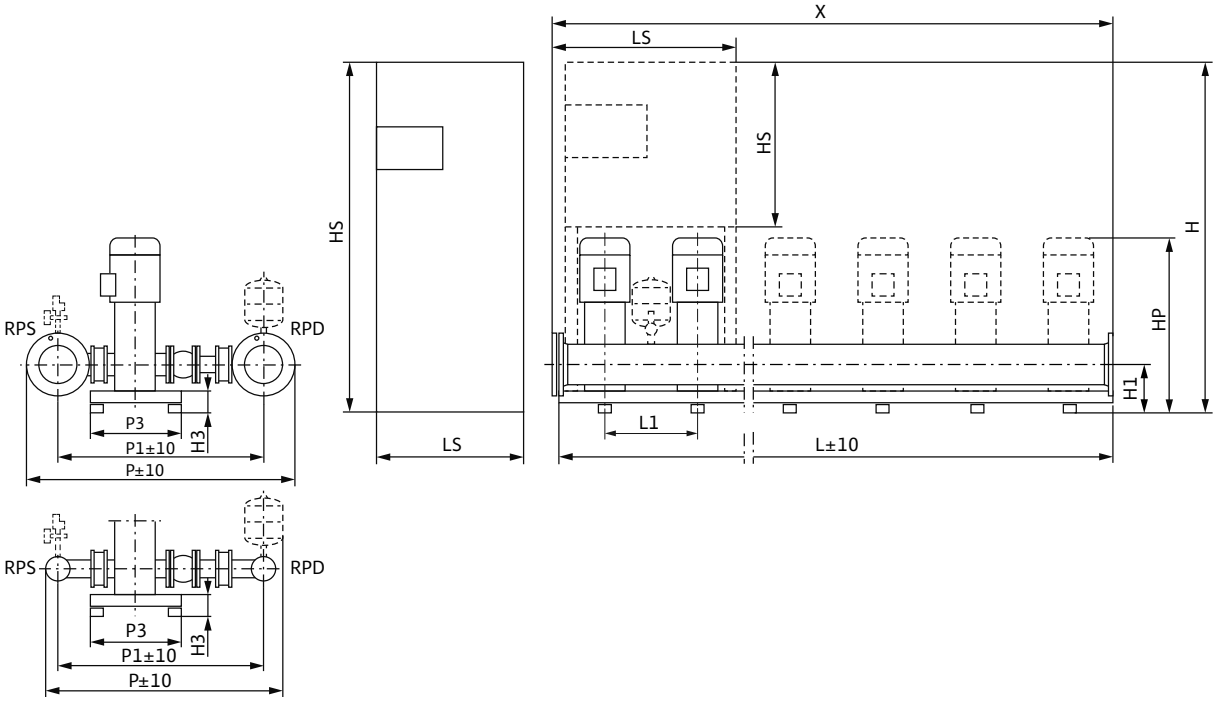

Sample systems are shown. Switchbox position depends on pump height.
Accessories (to be ordered separately): Optional WMS low-water cut-out switchgear kit
Installation surface: flat and horizontal
Installation location: dry, well ventilated and frost-proof

Dimensions, weights

Wilo-Comfort CO(R)-5Helix...	Nominal diameters of the pipe connections on suction side	Nominal diameters of pipe connections on the pressure side	Dimensions																Weight approx.	
											CO	COR	CO	COR	CO	COR	CO	COR	CO	COR
	RPS	*RPD*	*H1*	*H3*	*HP*	*L1*	*P*	*P1*	*P3*	*X*	*H*		*HS*		*L*		*LS*		*m*	
			mm																kg	
Helix V 5202/2/K/CC	DN 200	DN 200	262	122	1266	500	1456	1116	500	2500	–	–	1900	1900	2580	2580	800	1000	1258	1283
Helix V 5202/K/CC	DN 200	DN 200	262	122	1266	500	1456	1116	500	2500	–	–	1900	1900	2580	2580	800	1000	1295	1320
Helix V 5203/2/K/CC	DN 200	DN 200	262	122	1511	500	1456	1116	500	2500	–	–	1900	1900	2580	2580	800	1000	1506	1569
Helix V 5203/K/CC	DN 200	DN 200	262	122	1511	500	1456	1116	500	2500	–	–	1900	1900	2580	2580	800	1000	1506	1569
Helix V 5204/2/K/CC	DN 200	DN 200	262	122	1611	500	1456	1116	500	2500	–	–	1900	1900	2580	2580	800	1200	1590	1657
Helix V 5204/K/CC	DN 200	DN 200	262	122	1611	500	1456	1116	500	2500	–	–	1900	1900	2580	2580	800	1200	1591	1658
Helix V 5205/2/K/CC	DN 200	DN 200	262	122	1711	500	1456	1116	500	2500	–	–	1900	1900	2580	2580	800	1800	1659	1946
Helix V 5205/K/CC	DN 200	DN 200	262	122	1711	500	1456	1116	500	2500	–	–	1900	1900	2580	2580	800	1800	1659	1946
Helix V 5206/2/K/CC	DN 200	DN 200	262	122	1854	500	1456	1116	500	2500	–	–	1900	1900	2580	2580	800	1800	1787	2074

Technical data Wilo-Comfort CO-/COR-Helix V.../CC

Pump curves

Wilo-Comfort CO(R) -6 Helix V 5202-5206/CC

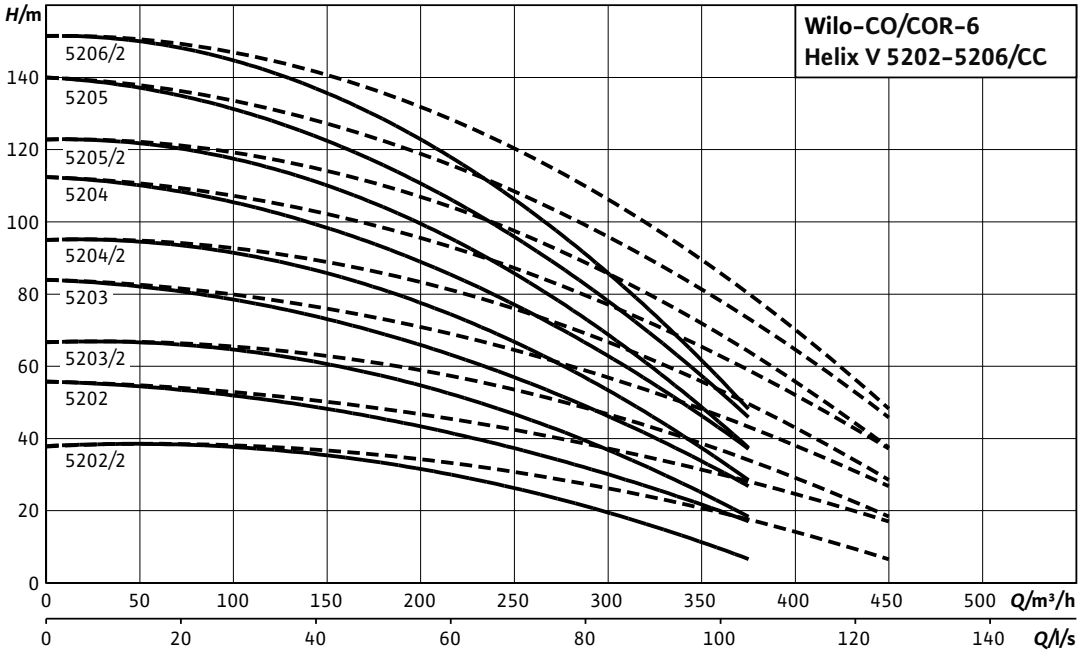

---- including standby pump

Motor data per pump

Wilo-Comfort CO(R)-6Helix...	Nominal motor power	Nominal current 3~400 V, 50 Hz	Motor efficiency		
	P_2	I_N	$\eta_{m\ 50\%}$	$\eta_{m\ 75\%}$	$\eta_{m\ 100\%}$
	kW	A	%		
Helix V 5202/2/K/CC	5.5	10.1	85.2	86.9	88.1
Helix V 5202/K/CC	7.5	13.5	88.5	89.9	89.5
Helix V 5203/2/K/CC	11	20	87.5	89.3	89.4
Helix V 5203/K/CC	11	20	87.5	89.3	89.4
Helix V 5204/2/K/CC	15	26.2	88.4	90.2	90.3
Helix V 5204/K/CC	15	26.2	88.4	90.2	90.3
Helix V 5205/2/K/CC	18.5	32	89.0	90.8	90.9
Helix V 5205/K/CC	18.5	32	89.0	90.8	90.9
Helix V 5206/2/K/CC	22	38	89.5	90.9	91.3

Motor efficiency based on 400 V, 50 Hz

Technical data Wilo-Comfort CO-/COR-Helix V.../CC

Dimension drawing

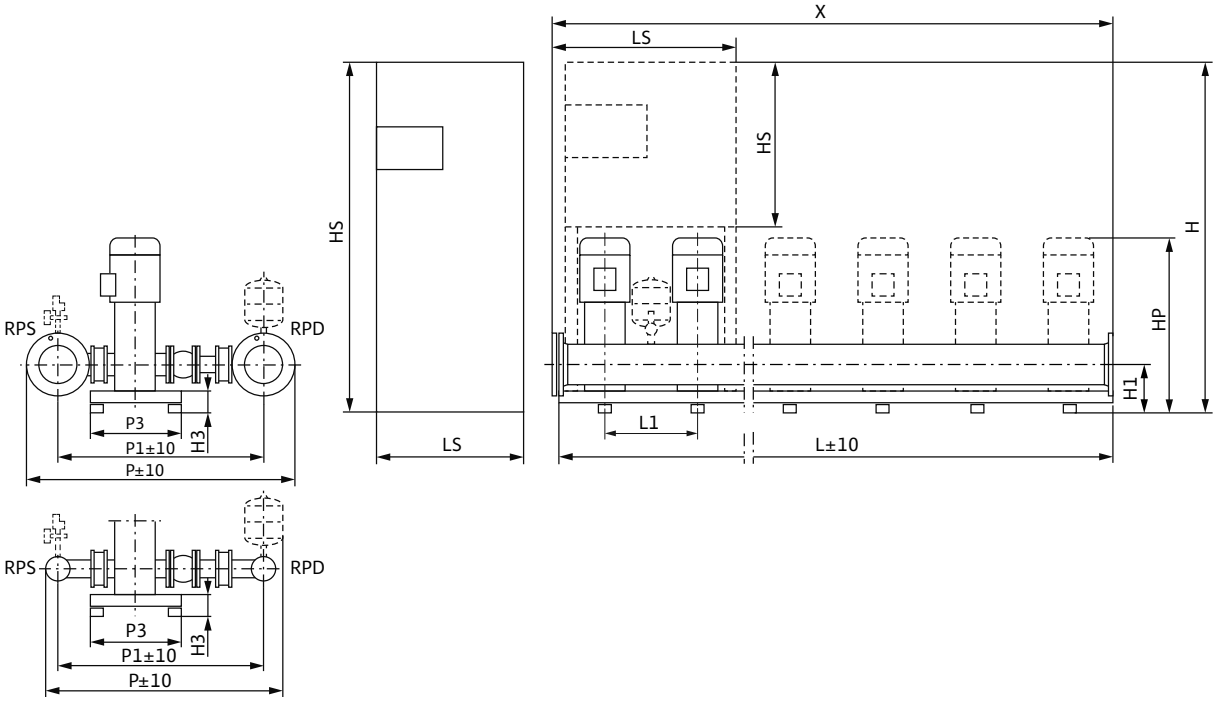

Sample systems are shown. Switchbox position depends on pump height.
Accessories (to be ordered separately): Optional WMS low-water cut-out switchgear kit
Installation surface: flat and horizontal
Installation location: dry, well ventilated and frost-proof

Dimensions, weights

Wilo-Comfort CO(R)-6Helix...	Nominal diameters of the pipe connections on suction side	Nominal diameters of pipe connections on the pressure side	Dimensions																Weight approx.	
											CO	COR	CO	COR	CO	COR	CO	COR	CO	COR
	RPS	*RPD*	*H1*	*H3*	*HP*	*L1*	*P*	*P1*	*P3*	*X*	*H*		*HS*		*L*		*LS*		*m*	
			mm																kg	
Helix V 5202/2/K/CC	DN 200	DN 200	262	122	1266	500	1456	1116	500	3000	–	–	1900	1900	3000	3000	800	1000	1443	1468
Helix V 5202/K/CC	DN 200	DN 200	262	122	1266	500	1456	1116	500	3000	–	–	1900	1900	3000	3000	800	1000	1487	1514
Helix V 5203/2/K/CC	DN 200	DN 200	262	122	1511	500	1456	1116	500	3000	–	–	1900	1900	3000	3000	800	1000	1834	1797
Helix V 5203/K/CC	DN 200	DN 200	262	122	1511	500	1456	1116	500	3000	–	–	1900	1900	3000	3000	800	1000	1834	1797
Helix V 5204/2/K/CC	DN 200	DN 200	262	122	1611	500	1456	1116	500	3000	–	–	1900	1900	3000	3000	800	1200	1834	1901
Helix V 5204/K/CC	DN 200	DN 200	262	122	1611	500	1456	1116	500	3000	–	–	1900	1900	3000	3000	800	1200	1834	1901
Helix V 5205/2/K/CC	DN 200	DN 200	262	122	1711	500	1456	1116	500	3000	–	–	1900	1900	3000	3000	800	1800	1916	2203
Helix V 5205/K/CC	DN 200	DN 200	262	122	1711	500	1456	1116	500	3000	–	–	1900	1900	3000	3000	800	1800	1916	2203
Helix V 5206/2/K/CC	DN 200	DN 200	262	122	1854	500	1456	1116	500	3000	–	–	1900	1900	3000	3000	800	1800	2070	2353

Pressure boosting

Multi-pump systems with fixed speed or speed-controlled base-load pump

Series description Wilo-Comfort CO-/COR-MVI.../CC

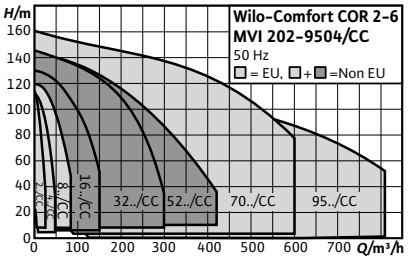

Design

Pressure boosting system with 2 to 6 parallel-switched, non self-priming stainless steel high-pressure multistage centrifugal pumps

Type key

Example:	**Wilo-COR-4 MVI 804/CC**
CO	Compact pressure boosting system
R	Control of the respective base-load pump by frequency converters
4	Number of pumps
MVI	Pump series
8	Rated volume flow of the single pump [m^3/h]
04	Number of single-pump stages
CC	Control unit; CC = Comfort-Controller

Application

- Fully automatic water supply and pressure boosting in residential, commercial and public buildings, hotels, hospitals, department stores and for industrial systems.
- Pumping of potable water and process water, cooling water, water for fire-fighting or other water mixtures that do not chemically or mechanically attack the materials used and do not contain abrasive or long-fibre constituents

Special features/product advantages

- Convenient system with MVI series stainless steel high-pressure multistage centrifugal pumps for all requirements contained in DIN 1988
- 2-6 vertical MVI series high-pressure multistage centrifugal pumps switched in parallel with IEC standard motors
- CC Comfort Control with memory-programmable microcomputer control and graphics-ready touch display, menu-prompted input of operating parameters; on COR systems, fitted with frequency converter for infinitely variable control of the base-load pump
- Customised units on request

Technical data

- Mains connection 3~230 V/400 V ± 10%, 50 Hz
- Max. fluid temperature 50 °C (70 °C optional)
- Operating pressure 16 bar (25 bar optional)
- Inlet pressure 10 bar
- Nominal connection diameters on discharge side R 1½ - DN 200
- Nominal connection diameters on inlet side R 1½" - DN 200
- Nominal speed 2850 rpm
- Protection class IP 54 (CC control device)
- Fuse protection on mains side AC 3 according to motor power and EVU regulations
- Approved fluids (other fluids on request):
  - Potable water and secondary hot water
  - Cooling water
  - Fire water
- Note on fluids: Approved fluids are generally waters which do not attack the materials used, neither chemically nor mechanically, and do not contain any abrasive or long-fibre constituents.

Equipment/function

- 2-6 pumps of the MVI series per system
- Automatic pump control via CC Controller
- Components that come in contact with fluid are corrosion-resistant
- Base frame, galvanised, with height-adjustable vibration absorber for insulation against structure-borne noise
- Check valve at each pump, on the suction and pressure side
- Non-return valve, on the pressure side
- Diaphragm pressure vessel 8 l, PN16, pressure side
- Pressure sensor, discharge side
- Optional pressure gauge, suction side
- Pressure gauge, discharge side
- Optional low-water cut-out switchgear

Materials

MVI 1.. to 16..-6

- Impellers and stage chambers made of 1.4301/1.4404 stainless steel (MVI 16..-6 only in 1.4301)
- Pump housing made of 1.4301/1.4404 stainless steel
- Shaft 1.4301/1.4404 stainless steel
- Gasket EPDM (EP 851) / FKM (Viton)
- Housing cover made of 1.4301/1.4404 stainless steel
- Housing bottom 1.4301/1.4404 stainless steel
- Mechanical seal B-carbon/tungsten carbide, SiC/carbon
- Pressure shroud 1.4301/1.4404 stainless steel
- Bearing, tungsten carbide
- Pump base EN-GJL-250
- Pipework made of 1.4571 stainless steel

MVI 16.. to 95..

- Impellers 1.4301/1.4404 stainless steel
- Stage chambers 1.4301/1.4404 stainless steel

Series description Wilo-Comfort CO-/COR-MVI.../CC

- Pump housing EN-GJL-250/1.4404
- Shaft 1.4057/1.4404 stainless steel
- Gasket EPDM (EP 851) / FKM (Viton)
- Housing cover made of 1.4301/1.4404 stainless steel
- Housing bottom 1.4301/1.4404 stainless steel
- Mechanical seal B-carbon/tungsten carbide, SiC/carbon
- Pressure shroud 1.4301/1.4404 stainless steel
- Bearing, tungsten carbide
- Pipework made of 1.4571 stainless steel

Description/design

- Base frame: galvanised and provided with height-adjustable vibration absorbers for comprehensive insulation against structure-borne noise; other versions on request
- Pipework: complete pipework made of stainless steel, suitable for the connection of all piping materials used in building services; the pipework is dimensioned according to the overall hydraulic performance of the pressure boosting system
- Pumps: 2 to 6 pumps of the MVI 2 to MVI 95 series switched in parallel are used; all pump components in contact with fluid are made of stainless or, starting with MVI 16.., of grey cast iron (cataphoretic-coated) or stainless steel on request
- Valves: each pump is fitted on the suction and pressure side with a check valve with DVGW approval mark or annular shut-off valves and a pressure-side DVGW-approved non-return valve
- Diaphragm pressure vessel: 8 l/PN 16 located on the discharge side with a butyl rubber diaphragm, completely safe in accordance with food safety laws, for testing and inspection purposes, with shut-off ball cock, with drain and throughflow fitting according to DIN 4807
- Pressure sensor: 4 to 20 mA, located on the discharge side for activating the central Comfort-Controller
- Pressure display: suction- and discharge-side pressure gauge (ø 63 mm); additional digital display of discharge pressure in the alphanumeric touchscreen of the Comfort-Controller.
- Switchgear/controller: the system is equipped with a CC Comfort-Controller as standard; COR additionally with a frequency converter

Scope of delivery

- Factory-mounted, connection-ready pressure boosting system checked for functionality and impermeability
- Packaging
- Installation and operating instructions

Options

Scope of delivery
Standard version without casing. Noise-attenuation casing on request.

Note

Pressure boosting systems with other sizes of the installed pumps (MVI 16..-6, MVI 16, MVI 32 and MVI 52) are offered only outside the EU member states. Information on these products is available **on request**.

Series description Wilo-Comfort CO-/COR-MVI.../CC

Terminal diagram

CC system, direct starting

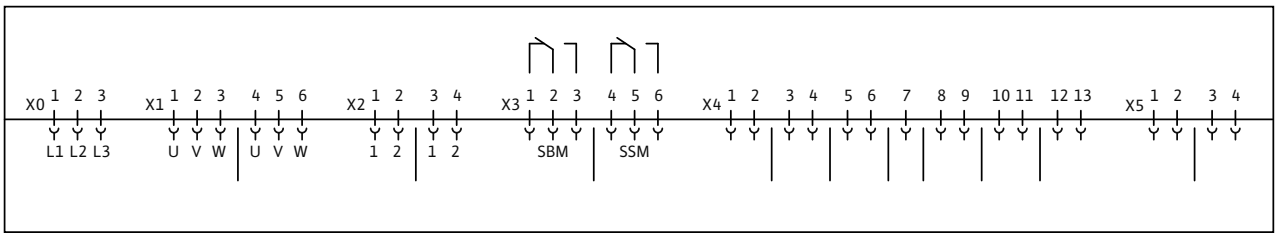

x0: Mains connection
x1: Power supply, pumps
- 1-3, pump 1
- 4-6, pump 2
x2: Thermal winding contact/PTC connection
- 1-2. pump 1
- 3-4, pump 2
- etc.
x3: Potential-free contacts
- 1-3, SBM (collective run signal)
- 4-6, SSM (collective fault signal)

x4: Sensor connections
- 1-2. external On/Off
- 3-4, dry-running protection
- 5, sensor (+); 6, sensor (In)
- 7, GND
- 8, analogue In (+); 9, analogue In (In)
- 10-11, setpoint 2
- 12-13, setpoint 3
x5: Analogue outputs
- 1-2. actual pressure (0...10 V)
- 3-4, actual frequency (0...10 V)

Series description Wilo-Comfort CO-/COR-MVI.../CC

Terminal diagram

CC system, Y-Δ starting

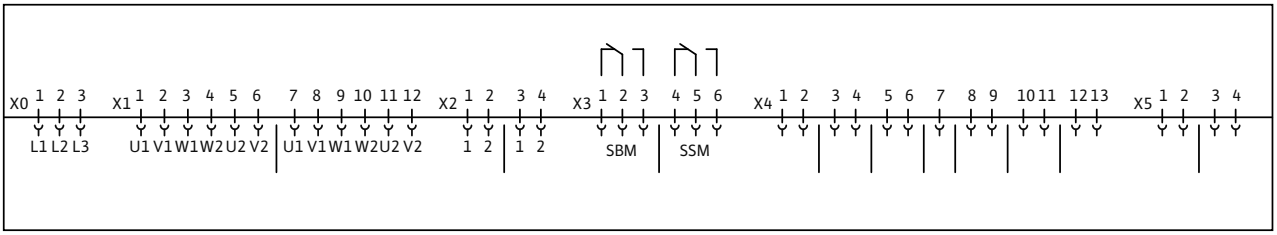

x0: Mains connection
x1: Power supply, pumps
- 1-6, pump 1
- 7-12. pump 2
x2: Thermal winding contact/PTC connection
- 1-2. pump 1
- 3-4, pump 2
- etc.
x3: Potential-free contacts
- 1-3, SBM (collective run signal)
- 4-6, SSM (collective fault signal)

x4: Sensor connections
- 1-2. external On/Off
- 3-4, dry-running protection
- 5, sensor (+); 6, sensor (In)
- 7, GND
- 8, analogue In (+); 9, analogue In (In)
- 10-11, setpoint 2
- 12-13, setpoint 3
x5: Analogue outputs
- 1-2. actual pressure (0...10 V)
- 3-4, actual frequency (0...10 V)

Technical data Wilo-Comfort CO-/COR-MVI.../CC

Pump curves

Wilo-Comfort CO(R)-2 MVI 202-210/CC

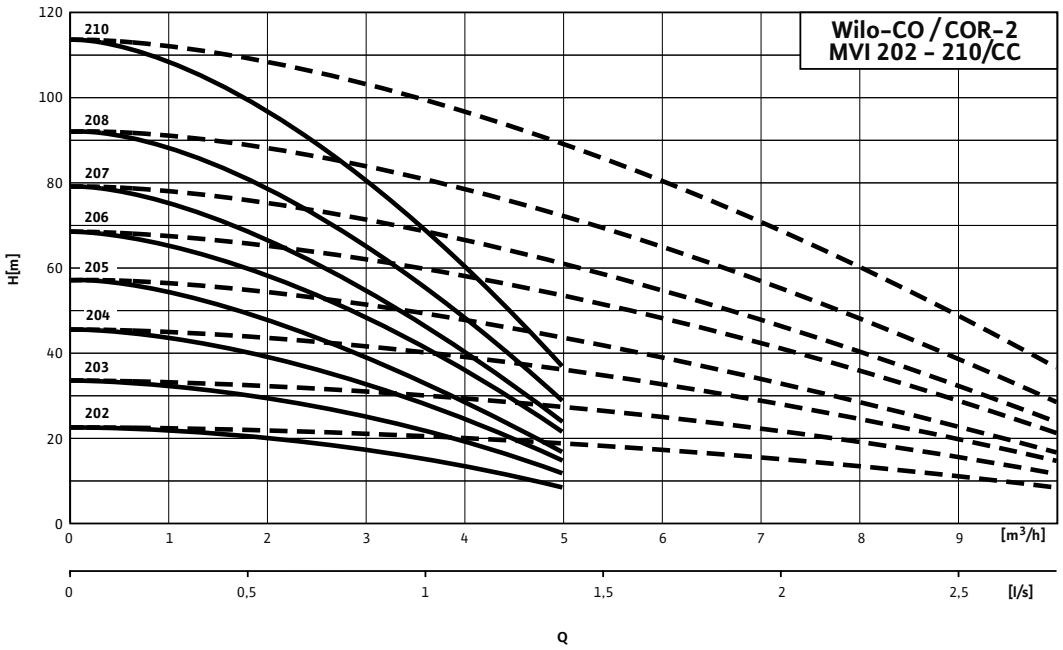

---- including standby pump

Motor data

Wilo-Comfort CO(R)- 2...	Nominal motor power	Nominal current 3~400 V, 50 Hz	Motor efficiency		
	P_2	I_N	$\eta_{m\ 50\%}$	$\eta_{m\ 75\%}$	$\eta_{m\ 100\%}$
	kW	A	%		
MVI 202/CC	0.4	0.97	71.0	72.8	72.8
MVI 203/CC	0.6	1.31	73.0	75.0	75.5
MVI 204/CC	0.8	1.77	76.0	77.4	77.4
MVI 205/CC	0.8	1.77	76.0	77.4	77.4
MVI 206/CC	1.1	2.6	78.0	79.6	79.6
MVI 207/CC	1.1	2.6	78.0	79.6	79.6
MVI 208/CC	1.5	3.3	80.0	81.3	81.3
MVI 210/CC	1.5	3.3	80.0	81.3	81.3

Motor efficiency based on 400 V, 50 Hz

Technical data Wilo-Comfort CO-/COR-MVI.../CC

Dimension drawing

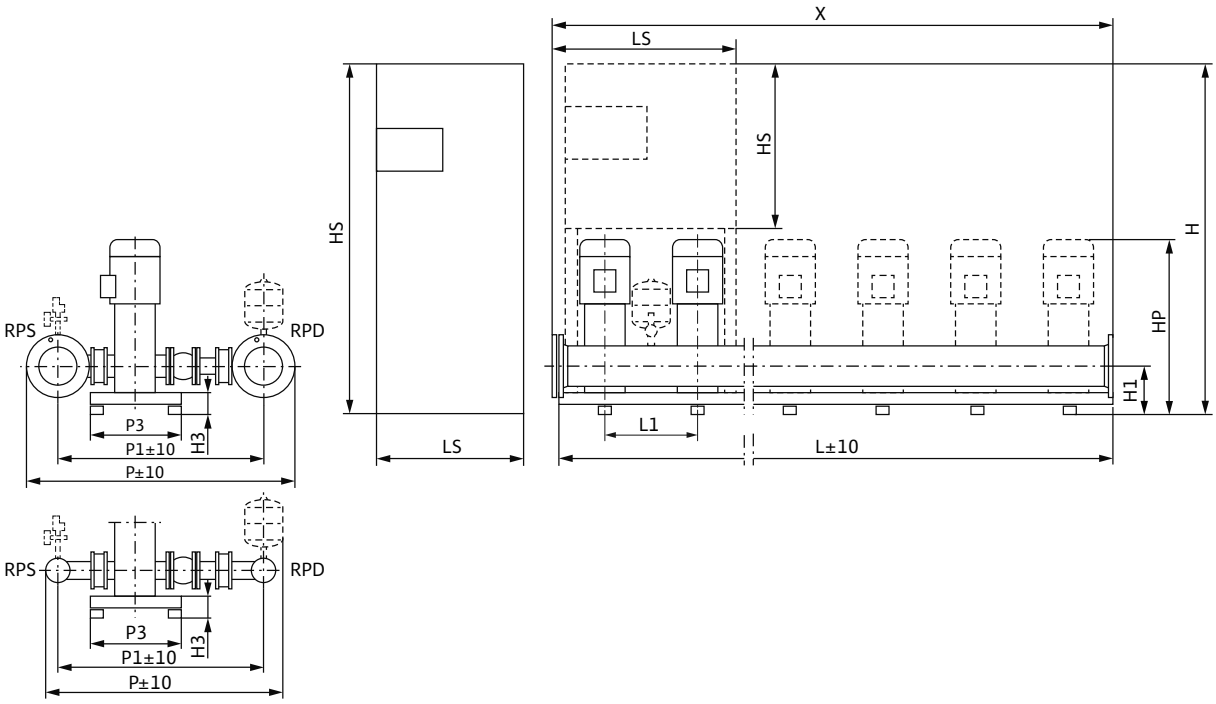

Sample systems are shown. Switchbox position depends on pump height.
Accessories (to be ordered separately): Optional WMS low-water cut-out switchgear kit
Installation surface: flat and horizontal
Installation location: dry, well ventilated and frost-proof

Dimensions, weights

Wilo-Comfort CO(R)- 2...	Nominal diameters of the pipe connections on suction side	Nominal diameters of pipe connections on the pressure side	Dimensions																Weight approx.	
											CO	COR	CO	COR	CO	COR	CO	COR	CO	COR
	RPS	*RPD*	*H1*	*H3*	*HP*	*L1*	*P*	*P1*	*P3*	*X*	*H*		*HS*		*L*		*LS*		*m*	
			mm																kg	
MVI 202/CC	R 2	R 2	140	90	607	300	750	613	300	600	1670	1670	600	760	600	600	600	600	141	154
MVI 203/CC	R 2	R 2	140	90	607	300	750	613	300	600	1670	1670	600	760	600	600	600	600	142	155
MVI 204/CC	R 2	R 2	140	90	661	300	750	613	300	600	1670	1670	600	760	600	600	600	600	146	159
MVI 205/CC	R 2	R 2	140	90	685	300	750	613	300	600	1670	1670	600	760	600	600	600	600	147	160
MVI 206/CC	R 2	R 2	140	90	709	300	750	613	300	600	1670	1670	600	760	600	600	600	600	151	165
MVI 207/CC	R 2	R 2	140	90	733	300	750	613	300	600	1670	1670	600	760	600	600	600	600	152	166
MVI 208/CC	R 2	R 2	140	90	807	300	750	613	300	600	1670	1670	600	760	600	600	600	600	166	179
MVI 210/CC	R 2	R 2	140	90	855	300	750	613	300	600	1870	1870	600	760	600	600	600	600	168	181

Technical data Wilo-Comfort CO-/COR-MVI.../CC

Pump curves

Wilo-Comfort CO(R)-3 MVI 202-210/CC

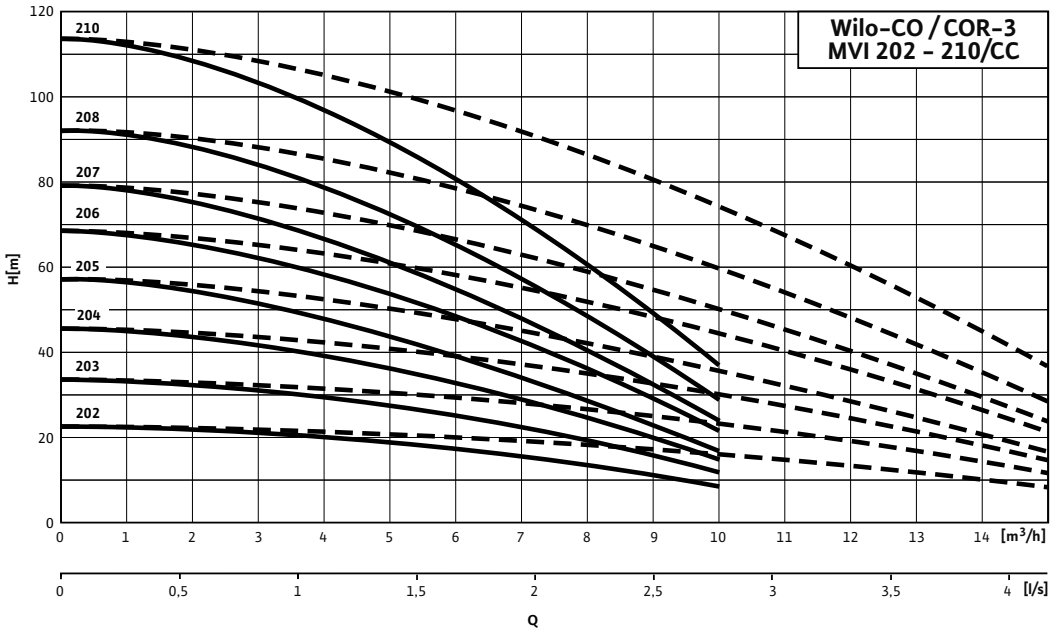

---- including standby pump

Motor data

Wilo-Comfort CO(R)- 3...	Nominal motor power	Nominal current 3~400 V, 50 Hz	Motor efficiency		
	P_2	I_N	$\eta_{m\ 50\%}$	$\eta_{m\ 75\%}$	$\eta_{m\ 100\%}$
	kW	A	%		
MVI 202/CC	0.4	0.97	71.0	72.8	72.8
MVI 203/CC	0.6	1.31	73.0	75.0	75.5
MVI 204/CC	0.8	1.77	76.0	77.4	77.4
MVI 205/CC	0.8	1.77	76.0	77.4	77.4
MVI 206/CC	1.1	2.6	78.0	79.6	79.6
MVI 207/CC	1.1	2.6	78.0	79.6	79.6
MVI 208/CC	1.5	3.3	80.0	81.3	81.3
MVI 210/CC	1.5	3.3	80.0	81.3	81.3

Motor efficiency based on 400 V, 50 Hz

Technical data Wilo-Comfort CO-/COR-MVI.../CC

Dimension drawing

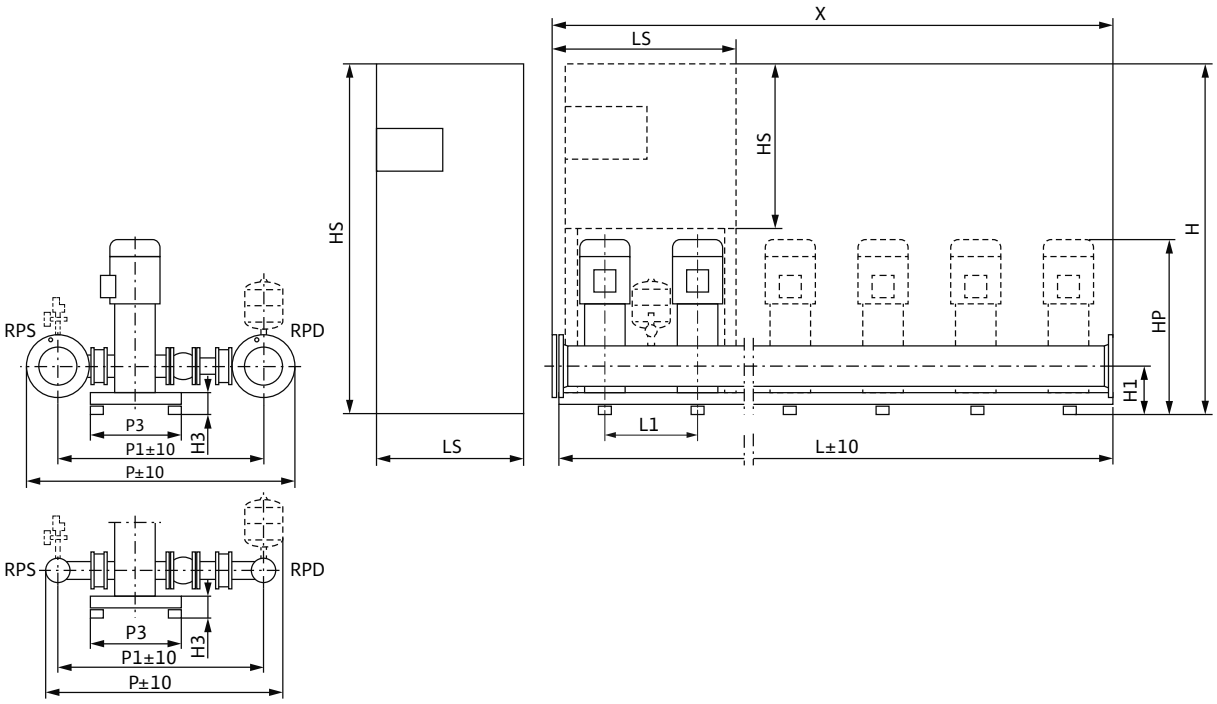

Sample systems are shown. Switchbox position depends on pump height.
Accessories (to be ordered separately): Optional WMS low-water cut-out switchgear kit
Installation surface: flat and horizontal
Installation location: dry, well ventilated and frost-proof

Dimensions, weights

Wilo-Comfort CO(R)- 3...	Nominal diameters of the pipe connections on suction side	Nominal diameters of pipe connections on the pressure side	Dimensions																Weight approx.	
											CO	COR	CO	COR	CO	COR	CO	COR	CO	COR
	RPS	*RPD*	*H1*	*H3*	*HP*	*L1*	*P*	*P1*	*P3*	*X*	*H*		*HS*		*L*		*LS*		*m*	
			mm																kg	
MVI 202/CC	R 2	R 2	140	90	607	300	750	613	300	900	1670	1670	600	760	900	900	600	600	187	199
MVI 203/CC	R 2	R 2	140	90	607	300	750	613	300	900	1670	1670	600	760	900	900	600	600	188	200
MVI 204/CC	R 2	R 2	140	90	661	300	750	613	300	900	1670	1670	600	760	900	900	600	600	194	206
MVI 205/CC	R 2	R 2	140	90	685	300	750	613	300	900	1670	1670	600	760	900	900	600	600	195	207
MVI 206/CC	R 2	R 2	140	90	709	300	750	613	300	900	1670	1670	600	760	900	900	600	600	202	215
MVI 207/CC	R 2	R 2	140	90	733	300	750	613	300	900	1670	1670	600	760	900	900	600	600	203	216
MVI 208/CC	R 2	R 2	140	90	807	300	750	613	300	900	1670	1670	600	760	900	900	600	600	225	236
MVI 210/CC	R 2	R 2	140	90	855	300	750	613	300	900	1870	1870	600	760	900	900	600	600	228	239

Technical data Wilo-Comfort CO-/COR-MVI.../CC

Pump curves

Wilo-Comfort CO(R)-4 MVI 202-210/CC

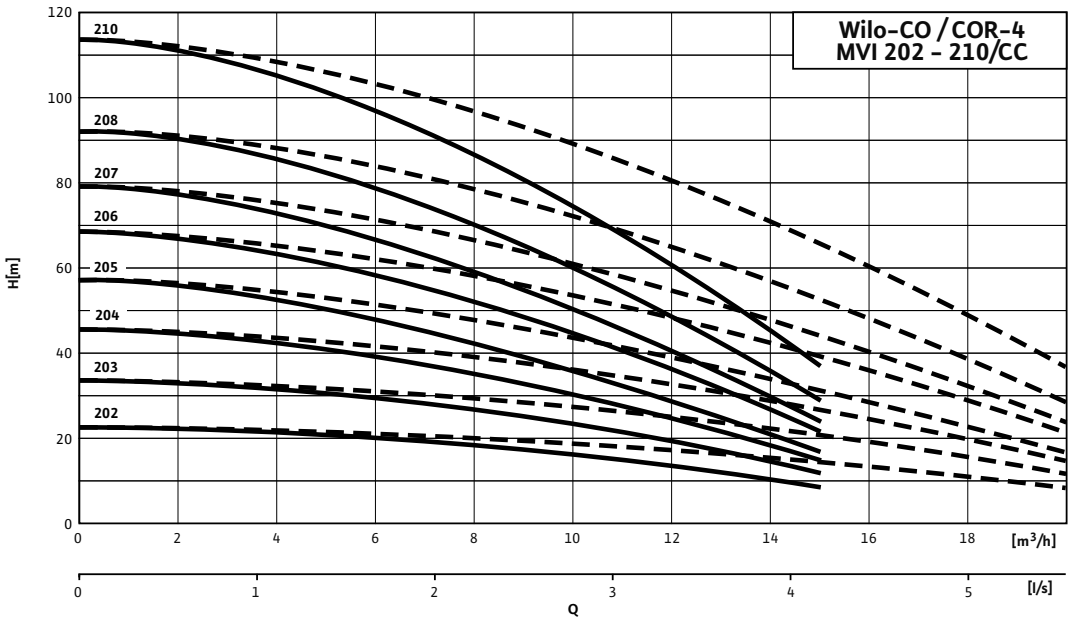

---- including standby pump

Motor data

Wilo-Comfort CO(R)- 4...	Nominal motor power	Nominal current 3~400 V, 50 Hz	Motor efficiency		
	P_2	I_N	$\eta_{m\ 50\%}$	$\eta_{m\ 75\%}$	$\eta_{m\ 100\%}$
	kW	A	%		
MVI 202/CC	0.4	0.97	71.0	72.8	72.8
MVI 203/CC	0.6	1.31	73.0	75.0	75.5
MVI 204/CC	0.8	1.77	76.0	77.4	77.4
MVI 205/CC	0.8	1.77	76.0	77.4	77.4
MVI 206/CC	1.1	2.6	78.0	79.6	79.6
MVI 207/CC	1.1	2.6	78.0	79.6	79.6
MVI 208/CC	1.5	3.3	80.0	81.3	81.3
MVI 210/CC	1.5	3.3	80.0	81.3	81.3

Motor efficiency based on 400 V, 50 Hz

Technical data Wilo-Comfort CO-/COR-MVI.../CC

Dimension drawing

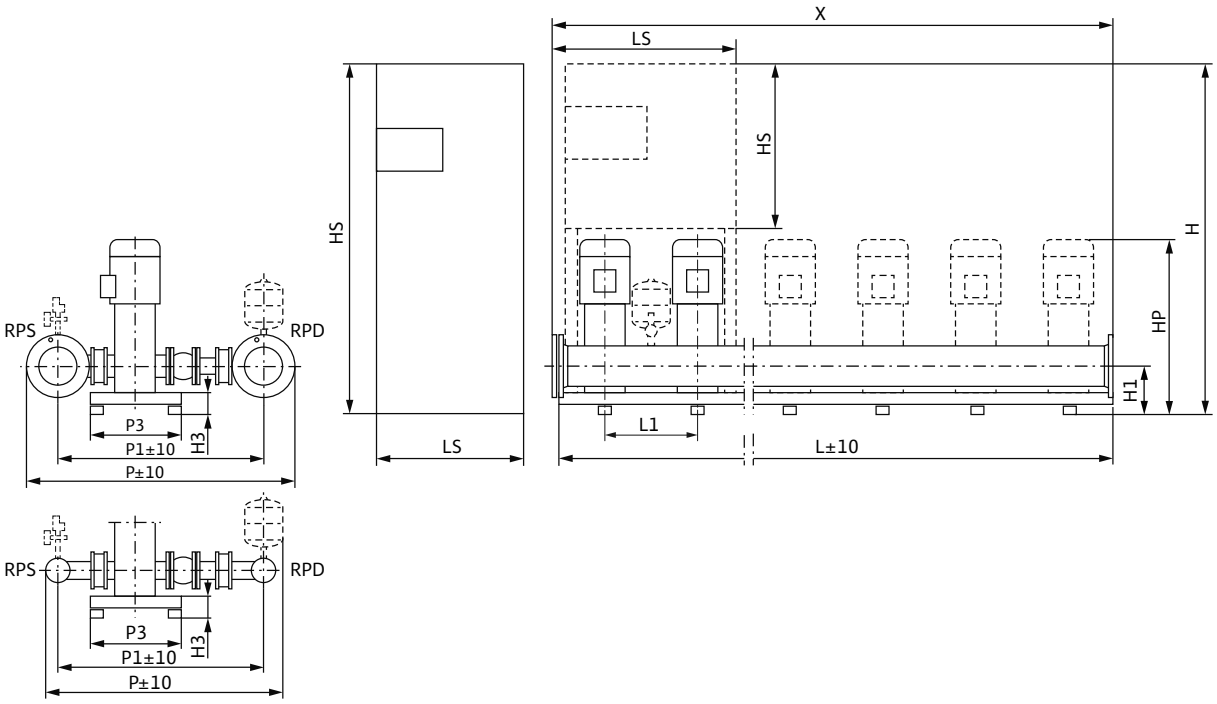

Sample systems are shown. Switchbox position depends on pump height.
Accessories (to be ordered separately): Optional WMS low-water cut-out switchgear kit
Installation surface: flat and horizontal
Installation location: dry, well ventilated and frost-proof

Dimensions, weights

Wilo-Comfort CO(R)- 4...	Nominal diameters of the pipe connections on suction side	Nominal diameters of pipe connections on the pressure side	Dimensions																Weight approx.	
											CO	COR	CO	COR	CO	COR	CO	COR	CO	COR
	RPS	*RPD*	*H1*	*H3*	*HP*	*L1*	*P*	*P1*	*P3*	*X*	*H*		*HS*		*L*		*LS*		*m*	
			mm																kg	
MVI 202/CC	R 2	R 2	140	90	607	300	750	613	300	1200	1670	1670	600	760	1200	1200	600	600	232	244
MVI 203/CC	R 2	R 2	140	90	607	300	750	613	300	1200	1670	1670	600	760	1200	1200	600	600	233	245
MVI 204/CC	R 2	R 2	140	90	661	300	750	613	300	1200	1670	1670	600	760	1200	1200	600	600	242	254
MVI 205/CC	R 2	R 2	140	90	685	300	750	613	300	1200	1670	1670	600	760	1200	1200	600	600	243	255
MVI 206/CC	R 2	R 2	140	90	709	300	750	613	300	1200	1670	1670	600	760	1200	1200	600	600	252	264
MVI 207/CC	R 2	R 2	140	90	733	300	750	613	300	1200	1670	1670	600	760	1200	1200	600	600	253	265
MVI 208/CC	R 2	R 2	140	90	807	300	750	613	300	1200	1670	1670	600	760	1200	1200	600	600	283	294
MVI 210/CC	R 2	R 2	140	90	855	300	750	613	300	1200	1870	1870	600	760	1200	1200	600	600	286	298

Technical data Wilo-Comfort CO-/COR-MVI.../CC

Pump curves

Wilo-Comfort CO(R)-5 MVI 202-210/CC

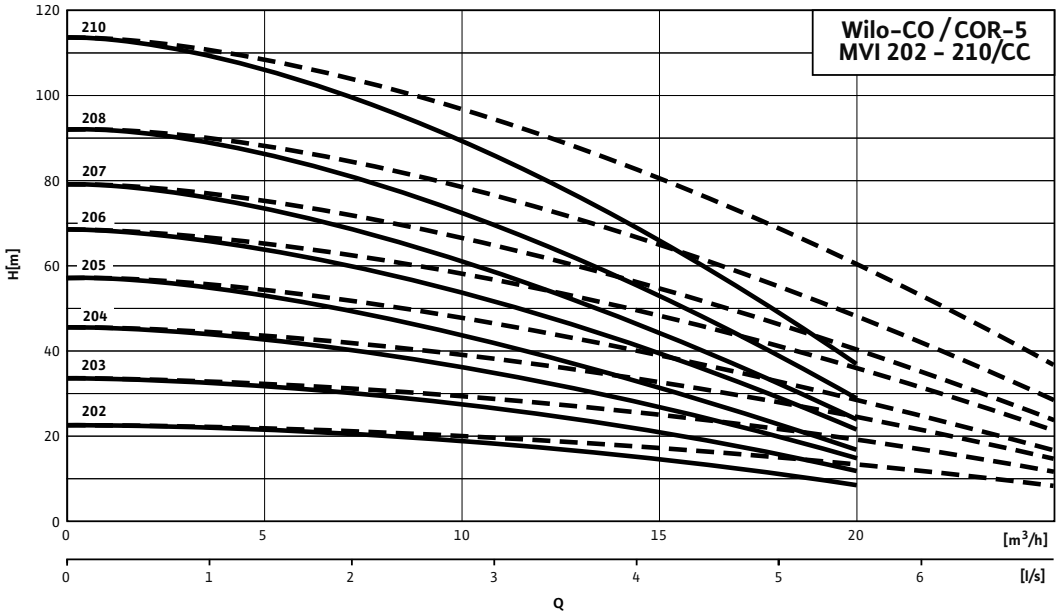

---- including standby pump

Motor data

Wilo-Comfort CO(R)- 5...	Nominal motor power	Nominal current 3~400 V, 50 Hz	Motor efficiency		
	P_2	I_N	$\eta_{m\ 50\%}$	$\eta_{m\ 75\%}$	$\eta_{m\ 100\%}$
	kW	A	%		
MVI 202/CC	0.4	0.97	71.0	72.8	72.8
MVI 203/CC	0.6	1.31	73.0	75.0	75.5
MVI 204/CC	0.8	1.77	76.0	77.4	77.4
MVI 205/CC	0.8	1.77	76.0	77.4	77.4
MVI 206/CC	1.1	2.6	78.0	79.6	79.6
MVI 207/CC	1.1	2.6	78.0	79.6	79.6
MVI 208/CC	1.5	3.3	80.0	81.3	81.3
MVI 210/CC	1.5	3.3	80.0	81.3	81.3

Motor efficiency based on 400 V, 50 Hz

Technical data Wilo-Comfort CO-/COR-MVI.../CC

Dimension drawing

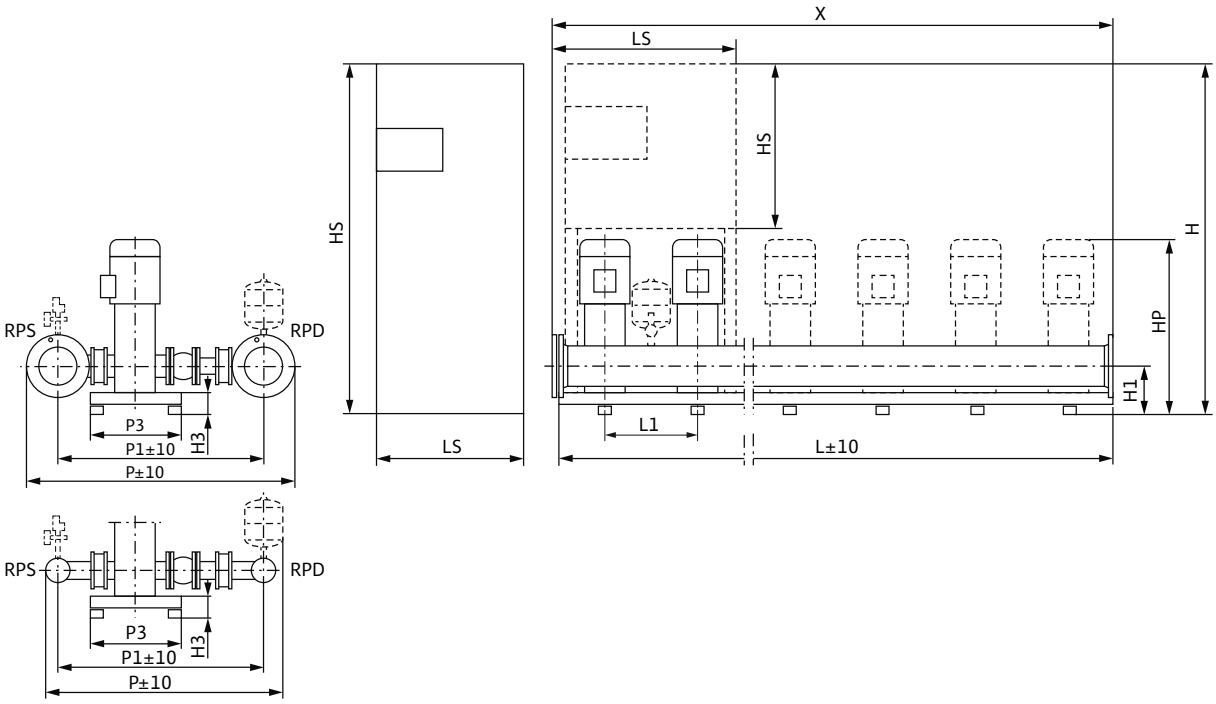

Sample systems are shown. Switchbox position depends on pump height.
Accessories (to be ordered separately): Optional WMS low-water cut-out switchgear kit
Installation surface: flat and horizontal
Installation location: dry, well ventilated and frost-proof

Dimensions, weights

Wilo-Comfort CO(R)- 5...	Nominal diameters of the pipe connections on suction side	Nominal diameters of pipe connections on the pressure side	Dimensions																Weight approx.	
											CO	COR	CO	CO R	CO	COR	CO	COR	CO	COR
	RPS	*RPD*	*H1*	*H3*	*HP*	*L1*	*P*	*P1*	*P3*	*X*	*H*		*HS*		*L*		*LS*		*m*	
			mm																kg	
MVI 202/CC	R 2	R 2	140	90	607	300	750	613	300	1500	1670	1670	600	760	1500	1500	600	760	282	303
MVI 203/CC	R 2	R 2	140	90	607	300	750	613	300	1500	1670	1670	600	760	1500	1500	600	760	283	304
MVI 204/CC	R 2	R 2	140	90	661	300	750	613	300	1500	1670	1670	600	760	1500	1500	600	760	295	315
MVI 205/CC	R 2	R 2	140	90	685	300	750	613	300	1500	1670	1670	600	760	1500	1500	600	760	296	316
MVI 206/CC	R 2	R 2	140	90	709	300	750	613	300	1500	1670	1670	600	760	1500	1500	600	760	307	328
MVI 207/CC	R 2	R 2	140	90	733	300	750	613	300	1500	1670	1670	600	760	1500	1500	600	760	308	328
MVI 208/CC	R 2	R 2	140	90	807	300	750	613	300	1500	1670	1670	600	760	1500	1500	600	760	345	365
MVI 210/CC	R 2	R 2	140	90	855	300	750	613	300	1500	1870	1870	600	760	1500	1500	600	760	350	370

Technical data Wilo-Comfort CO-/COR-MVI.../CC

Pump curves

Wilo-Comfort CO(R)-6 MVI 202-210/CC

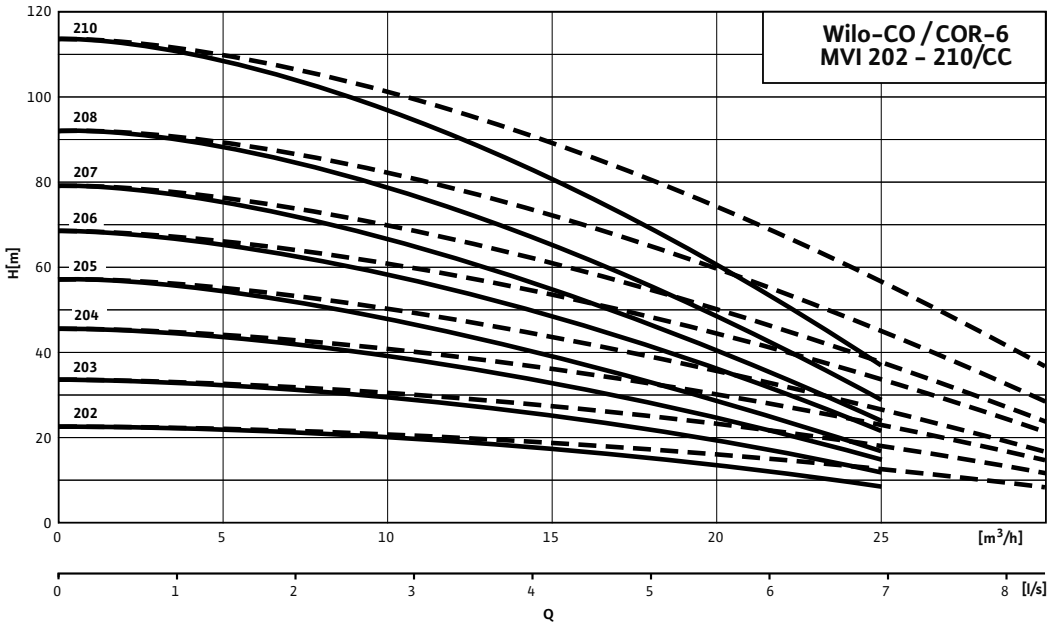

---- including standby pump

Motor data

Wilo-Comfort CO(R)- 6...	Nominal motor power	Nominal current 3~400 V, 50 Hz	Motor efficiency		
	P_2	I_N	$\eta_{m\ 50\%}$	$\eta_{m\ 75\%}$	$\eta_{m\ 100\%}$
	kW	A	%		
MVI 202/CC	0.4	0.97	71.0	72.8	72.8
MVI 203/CC	0.6	1.31	73.0	75.0	75.5
MVI 204/CC	0.8	1.77	76.0	77.4	77.4
MVI 205/CC	0.8	1.77	76.0	77.4	77.4
MVI 206/CC	1.1	2.6	78.0	79.6	79.6
MVI 207/CC	1.1	2.6	78.0	79.6	79.6
MVI 208/CC	1.5	3.3	80.0	81.3	81.3
MVI 210/CC	1.5	3.3	80.0	81.3	81.3

Motor efficiency based on 400 V, 50 Hz

Technical data Wilo-Comfort CO-/COR-MVI.../CC

Dimension drawing

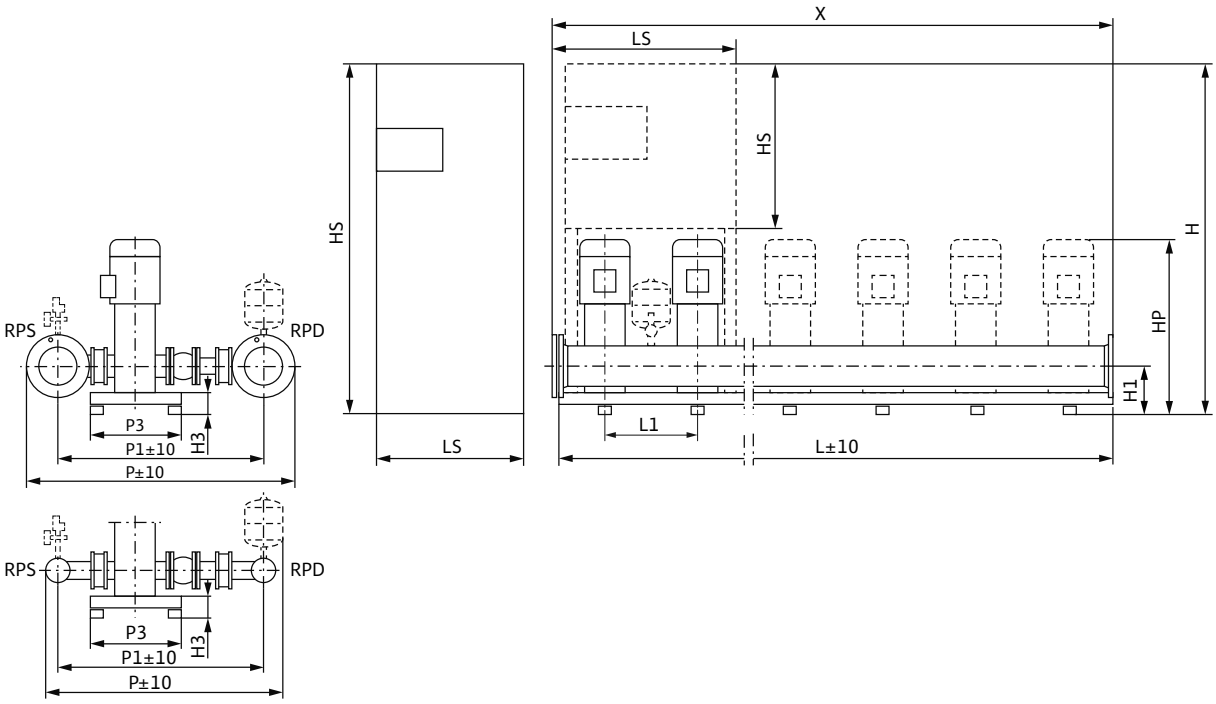

Sample systems are shown. Switchbox position depends on pump height.
Accessories (to be ordered separately): Optional WMS low-water cut-out switchgear kit
Installation surface: flat and horizontal
Installation location: dry, well ventilated and frost-proof

Dimensions, weights

Wilo-Comfort CO(R)- 6...	Nominal diameters of the pipe connections on suction side	Nominal diameters of pipe connections on the pressure side	Dimensions																Weight approx.	
											CO	COR	CO	COR	CO	COR	CO	COR	CO	COR
	RPS	*RPD*	*H1*	*H3*	*HP*	*L1*	*P*	*P1*	*P3*	*X*	*H*		*HS*		*L*		*LS*		*m*	
			mm																kg	
MVI 202/CC	R 2	R 2	140	90	607	300	750	613	300	1800	1670	1670	600	760	1800	1800	600	760	327	348
MVI 203/CC	R 2	R 2	140	90	607	300	750	613	300	1800	1670	1670	600	760	1800	1800	600	760	328	349
MVI 204/CC	R 2	R 2	140	90	661	300	750	613	300	1800	1670	1670	600	760	1800	1800	600	760	342	363
MVI 205/CC	R 2	R 2	140	90	685	300	750	613	300	1800	1670	1670	600	760	1800	1800	600	760	343	364
MVI 206/CC	R 2	R 2	140	90	709	300	750	613	300	1800	1670	1670	600	760	1800	1800	600	760	357	378
MVI 207/CC	R 2	R 2	140	90	733	300	750	613	300	1800	1670	1670	600	760	1800	1800	600	760	358	379
MVI 208/CC	R 2	R 2	140	90	807	300	750	613	300	1800	1670	1670	600	760	1800	1800	600	760	402	423
MVI 210/CC	R 2	R 2	140	90	855	300	750	613	300	1800	1870	1870	600	760	1800	1800	600	760	408	430

Technical data Wilo-Comfort CO-/COR-MVI.../CC

Pump curves

Wilo-Comfort CO(R)-2 MVI 402-410/CC

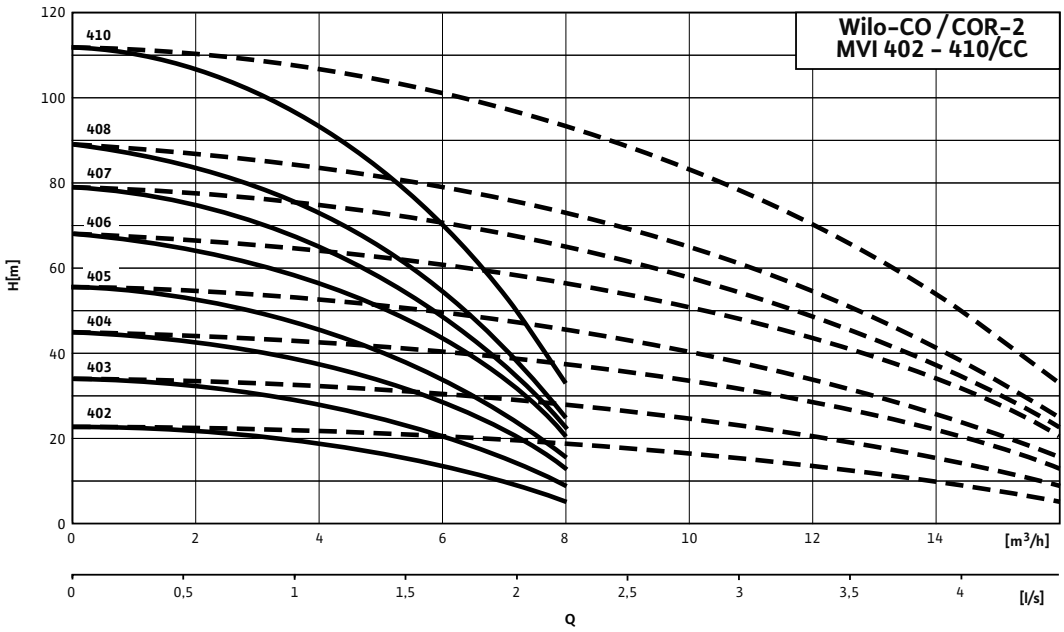

---- including standby pump

Motor data

Wilo-Comfort CO(R)- 2...	Nominal motor power	Nominal current 3~400 V, 50 Hz	Motor efficiency		
	P_2	I_N	$\eta_{m\ 50\%}$	$\eta_{m\ 75\%}$	$\eta_{m\ 100\%}$
	kW	A	%		
MVI 402/CC	0.6	1.31	73.0	75.0	75.5
MVI 403/CC	0.8	1.77	76.0	77.4	77.4
MVI 404/CC	1.1	2.6	78.0	79.6	79.6
MVI 405/CC	1.1	2.6	78.0	79.6	79.6
MVI 406/CC	1.5	3.3	80.0	81.3	81.3
MVI 407/CC	1.5	3.3	80.0	81.3	81.3
MVI 408/CC	2.2	4.6	82.0	83.2	83.2
MVI 410/CC	2.2	4.6	82.0	83.2	83.2

Motor efficiency based on 400 V, 50 Hz

Technical data Wilo-Comfort CO-/COR-MVI.../CC

Dimension drawing

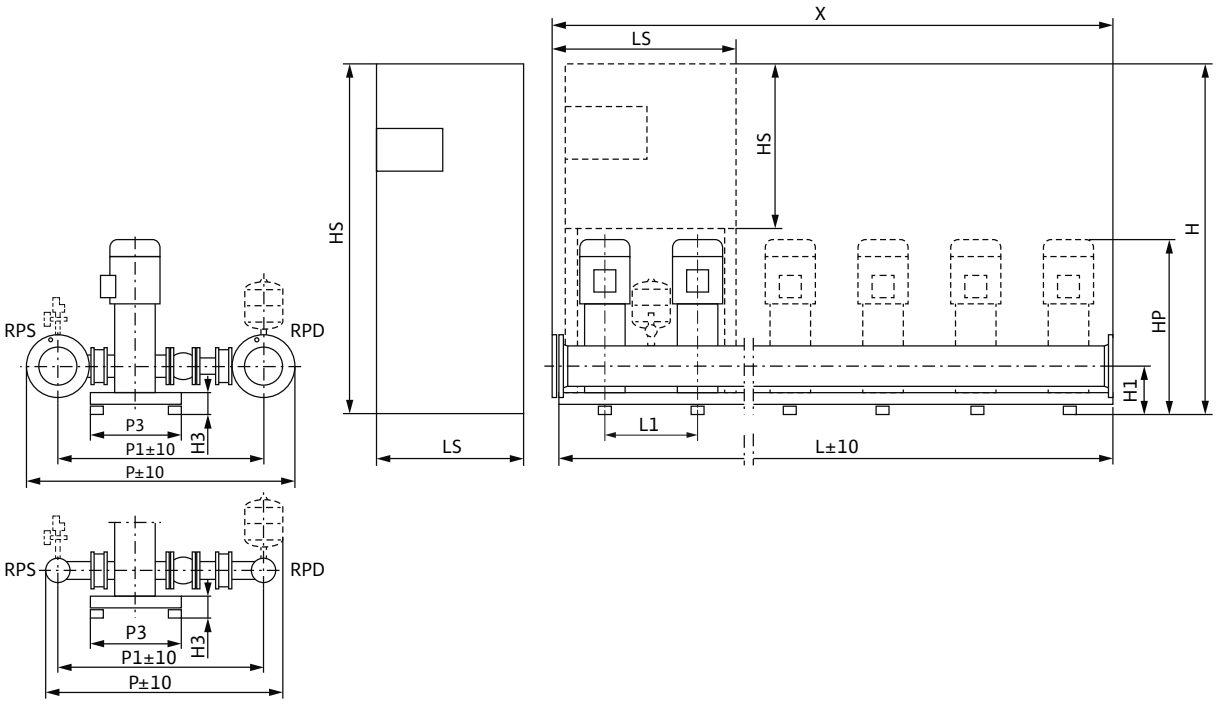

Sample systems are shown. Switchbox position depends on pump height.
Accessories (to be ordered separately): Optional WMS low-water cut-out switchgear kit
Installation surface: flat and horizontal
Installation location: dry, well ventilated and frost-proof

Dimensions, weights

Wilo-Comfort CO(R)- 2...	Nominal diameters of the pipe connections on suction side	Nominal diameters of pipe connections on the pressure side	Dimensions																Weight approx.	
											CO	COR	CO	COR	CO	COR	CO	COR	CO	COR
	RPS	*RPD*	*H1*	*H3*	*HP*	*L1*	*P*	*P1*	*P3*	*X*	*H*		*HS*		*L*		*LS*		*m*	
			mm																kg	
MVI 402/CC	Rp 2	Rp 2	140	90	633	300	750	613	300	600	1670	1670	600	760	600	600	600	600	140	153
MVI 403/CC	Rp 2	Rp 2	140	90	637	300	750	613	300	600	1670	1670	600	760	600	600	600	600	146	159
MVI 404/CC	Rp 2	Rp 2	140	90	661	300	750	613	300	600	1670	1670	600	760	600	600	600	600	150	163
MVI 405/CC	Rp 2	Rp 2	140	90	685	300	750	613	300	600	1670	1670	600	760	600	600	600	600	152	165
MVI 406/CC	Rp 2	Rp 2	140	90	759	300	750	613	300	600	1670	1670	600	760	600	600	600	600	161	174
MVI 407/CC	Rp 2	Rp 2	140	90	783	300	750	613	300	600	1670	1670	600	760	600	600	600	600	165	178
MVI 408/CC	Rp 2	Rp 2	140	90	807	300	750	613	300	600	1670	1670	600	760	600	600	600	600	166	179
MVI 410/CC	Rp 2	Rp 2	140	90	855	300	750	613	300	600	1870	1870	600	760	600	600	600	600	173	186

Technical data Wilo-Comfort CO-/COR-MVI.../CC

Pump curves

Wilo-Comfort CO(R)-3 MVI 402-410/CC

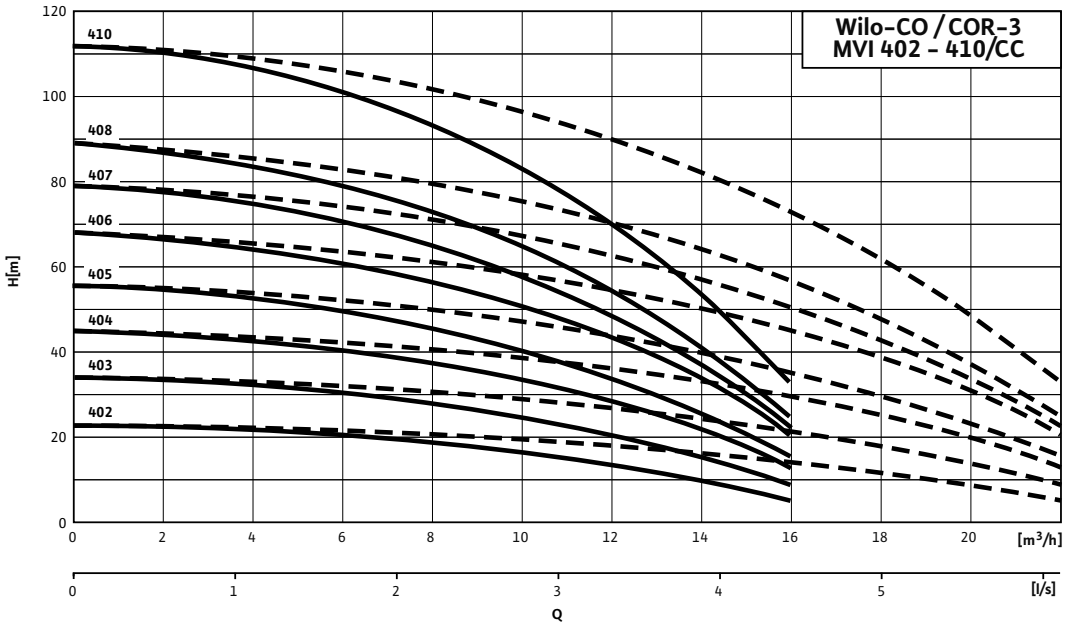

---- including standby pump

Motor data

Wilo-Comfort CO(R)- 3...	Nominal motor power	Nominal current 3~400 V, 50 Hz	Motor efficiency		
	P_2	I_N	$\eta_{m\ 50\%}$	$\eta_{m\ 75\%}$	$\eta_{m\ 100\%}$
	kW	A	%		
MVI 402/CC	0.6	1.31	73.0	75.0	75.5
MVI 403/CC	0.8	1.77	76.0	77.4	77.4
MVI 404/CC	1.1	2.6	78.0	79.6	79.6
MVI 405/CC	1.1	2.6	78.0	79.6	79.6
MVI 406/CC	1.5	3.3	80.0	81.3	81.3
MVI 407/CC	1.5	3.3	80.0	81.3	81.3
MVI 408/CC	2.2	4.6	82.0	83.2	83.2
MVI 410/CC	2.2	4.6	82.0	83.2	83.2

Motor efficiency based on 400 V, 50 Hz

Technical data Wilo-Comfort CO-/COR-MVI.../CC

Dimension drawing

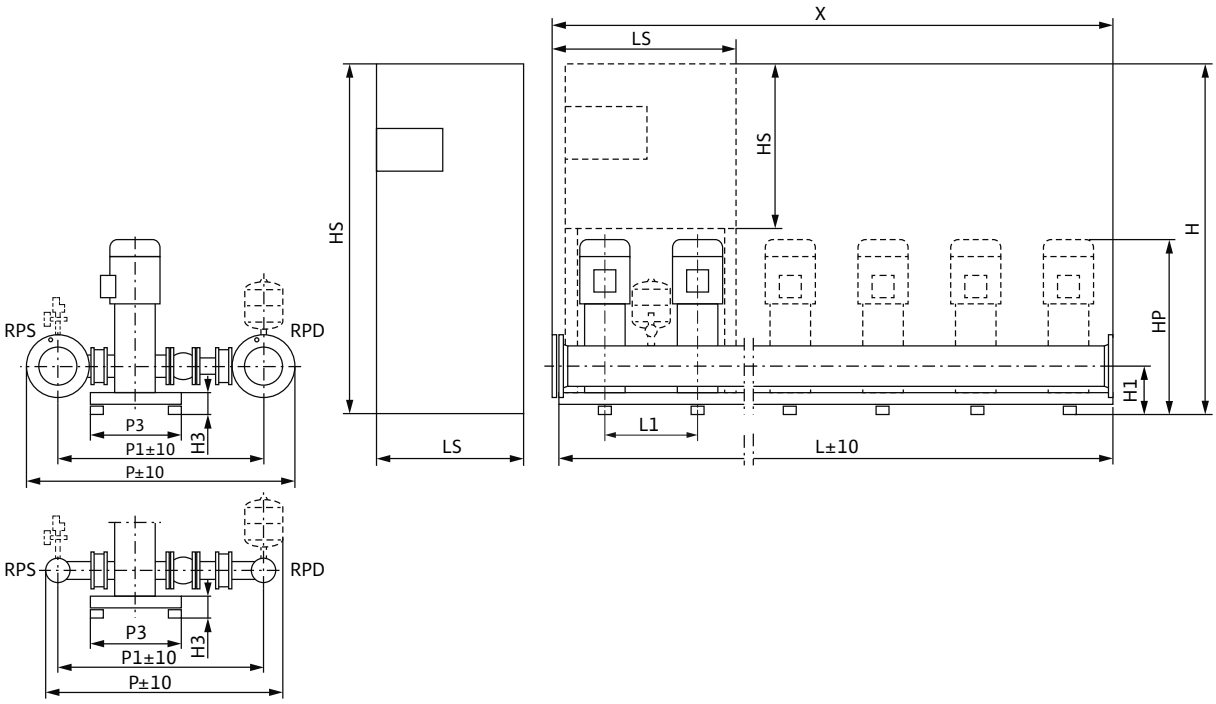

Sample systems are shown. Switchbox position depends on pump height.
Accessories (to be ordered separately): Optional WMS low-water cut-out switchgear kit
Installation surface: flat and horizontal
Installation location: dry, well ventilated and frost-proof

Dimensions, weights

Wilo-Comfort CO(R)- 3...	Nominal diameters of the pipe connections on suction side	Nominal diameters of pipe connections on the pressure side	Dimensions																Weight approx.	
											CO	COR	CO	COR	CO	COR	CO	COR	CO	COR
	RPS	*RPD*	*H1*	*H3*	*HP*	*L1*	*P*	*P1*	*P3*	*X*	*H*		*HS*		*L*		*LS*		*m*	
			mm																kg	
MVI 402/CC	Rp 2	Rp 2	140	90	633	300	750	613	300	900	1670	1670	600	760	900	900	600	600	185	198
MVI 403/CC	Rp 2	Rp 2	140	90	637	300	750	613	300	900	1670	1670	600	760	900	900	600	600	195	207
MVI 404/CC	Rp 2	Rp 2	140	90	661	300	750	613	300	900	1670	1670	600	760	900	900	600	600	200	212
MVI 405/CC	Rp 2	Rp 2	140	90	685	300	750	613	300	900	1670	1670	600	760	900	900	600	600	203	215
MVI 406/CC	Rp 2	Rp 2	140	90	759	300	750	613	300	900	1670	1670	600	760	900	900	600	600	217	229
MVI 407/CC	Rp 2	Rp 2	140	90	783	300	750	613	300	900	1670	1670	600	760	900	900	600	600	223	235
MVI 408/CC	Rp 2	Rp 2	140	90	807	300	750	613	300	900	1670	1670	600	760	900	900	600	600	224	237
MVI 410/CC	Rp 2	Rp 2	140	90	855	300	750	613	300	900	1870	1870	600	760	900	900	600	600	235	247

Technical data Wilo-Comfort CO-/COR-MVI.../CC

Pump curves

Wilo-Comfort CO(R)-4 MVI 402-410/CC

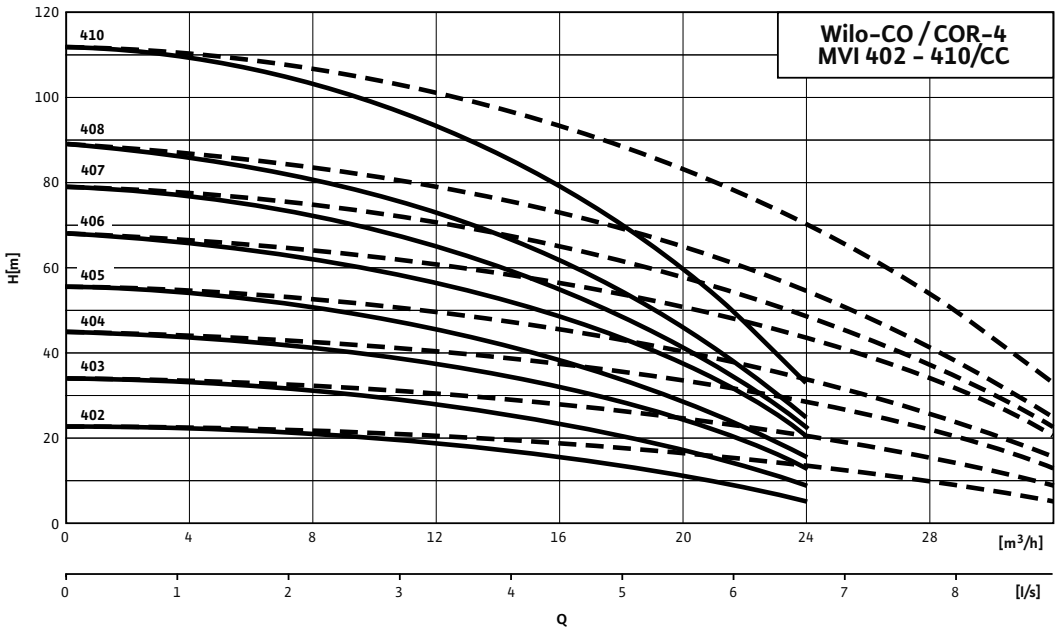

---- including standby pump

Motor data

Wilo-Comfort CO(R)- 4...	Nominal motor power	Nominal current 3~400 V, 50 Hz	Motor efficiency		
	P_2	I_N	$\eta_{m\ 50\%}$	$\eta_{m\ 75\%}$	$\eta_{m\ 100\%}$
	kW	A	%		
MVI 402/CC	0.6	1.31	73.0	75.0	75.5
MVI 403/CC	0.8	1.77	76.0	77.4	77.4
MVI 404/CC	1.1	2.6	78.0	79.6	79.6
MVI 405/CC	1.1	2.6	78.0	79.6	79.6
MVI 406/CC	1.5	3.3	80.0	81.3	81.3
MVI 407/CC	1.5	3.3	80.0	81.3	81.3
MVI 408/CC	2.2	4.6	82.0	83.2	83.2
MVI 410/CC	2.2	4.6	82.0	83.2	83.2

Motor efficiency based on 400 V, 50 Hz

Technical data Wilo-Comfort CO-/COR-MVI.../CC

Dimension drawing

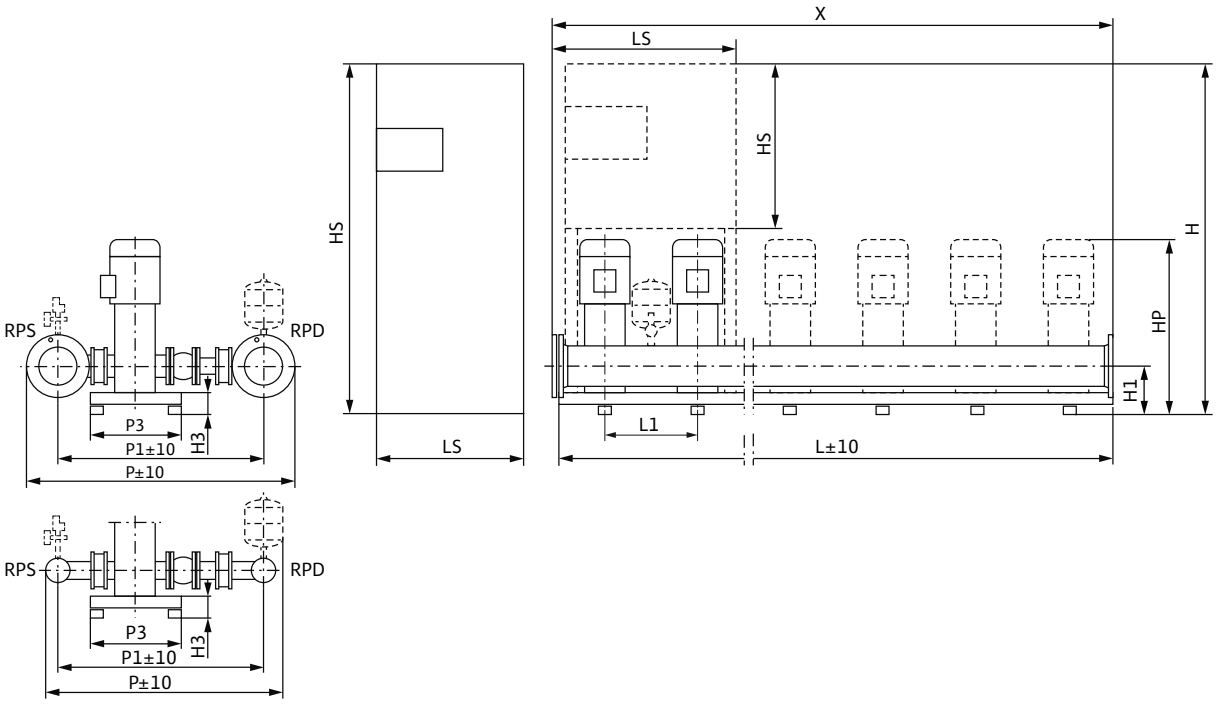

Sample systems are shown. Switchbox position depends on pump height.
Accessories (to be ordered separately): Optional WMS low-water cut-out switchgear kit
Installation surface: flat and horizontal
Installation location: dry, well ventilated and frost-proof

Dimensions, weights

Wilo-Comfort CO(R)- 4...	Nominal diameters of the pipe connections on suction side	Nominal diameters of pipe connections on the pressure side	Dimensions																Weight approx.	
											CO	COR	CO	COR	CO	COR	CO	COR	CO	COR
	RPS	*RPD*	*H1*	*H3*	*HP*	*L1*	*P*	*P1*	*P3*	*X*	*H*		*HS*		*L*		*LS*		*m*	
			mm																kg	
MVI 402/CC	Rp 2½	Rp 2½	140	90	633	300	782	629	300	1200	1670	1670	600	760	1200	1200	600	600	230	243
MVI 403/CC	Rp 2½	Rp 2½	140	90	637	300	782	629	300	1200	1670	1670	600	760	1200	1200	600	600	242	255
MVI 404/CC	Rp 2½	Rp 2½	140	90	661	300	782	629	300	1200	1670	1670	600	760	1200	1200	600	600	250	262
MVI 405/CC	Rp 2½	Rp 2½	140	90	685	300	782	629	300	1200	1670	1670	600	760	1200	1200	600	600	254	266
MVI 406/CC	Rp 2½	Rp 2½	140	90	759	300	782	629	300	1200	1670	1670	600	760	1200	1200	600	600	272	285
MVI 407/CC	Rp 2½	Rp 2½	140	90	783	300	782	629	300	1200	1670	1670	600	760	1200	1200	600	600	280	293
MVI 408/CC	Rp 2½	Rp 2½	140	90	807	300	782	629	300	1200	1670	1670	600	760	1200	1200	600	600	282	295
MVI 410/CC	Rp 2½	Rp 2½	140	90	855	300	782	629	300	1200	1870	1870	600	760	1200	1200	600	600	296	309

Technical data Wilo-Comfort CO-/COR-MVI.../CC

Pump curves

Wilo-Comfort CO(R)-5 MVI 402-410/CC

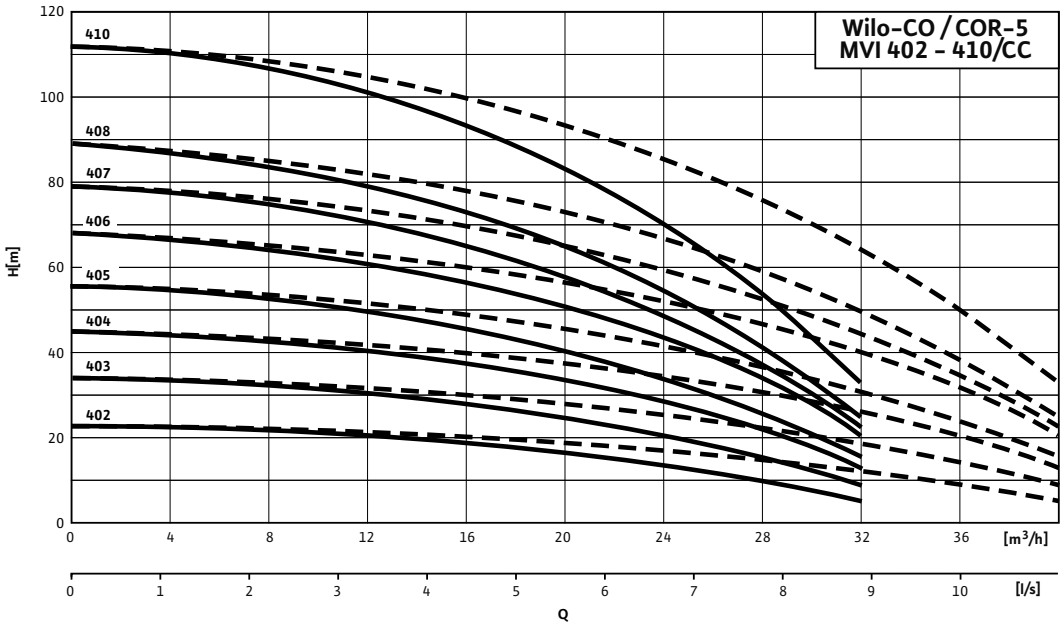

---- including standby pump

Motor data

Wilo-Comfort CO(R)- 5...	Nominal motor power	Nominal current 3~400 V, 50 Hz	Motor efficiency		
	P_2	I_N	$\eta_{m\ 50\%}$	$\eta_{m\ 75\%}$	$\eta_{m\ 100\%}$
	kW	A	%		
MVI 402/CC	0.6	1.31	73.0	75.0	75.5
MVI 403/CC	0.8	1.77	76.0	77.4	77.4
MVI 404/CC	1.1	2.6	78.0	79.6	79.6
MVI 405/CC	1.1	2.6	78.0	79.6	79.6
MVI 406/CC	1.5	3.3	80.0	81.3	81.3
MVI 407/CC	1.5	3.3	80.0	81.3	81.3
MVI 408/CC	2.2	4.6	82.0	83.2	83.2
MVI 410/CC	2.2	4.6	82.0	83.2	83.2

Motor efficiency based on 400 V, 50 Hz

Technical data Wilo-Comfort CO-/COR-MVI.../CC

Dimension drawing

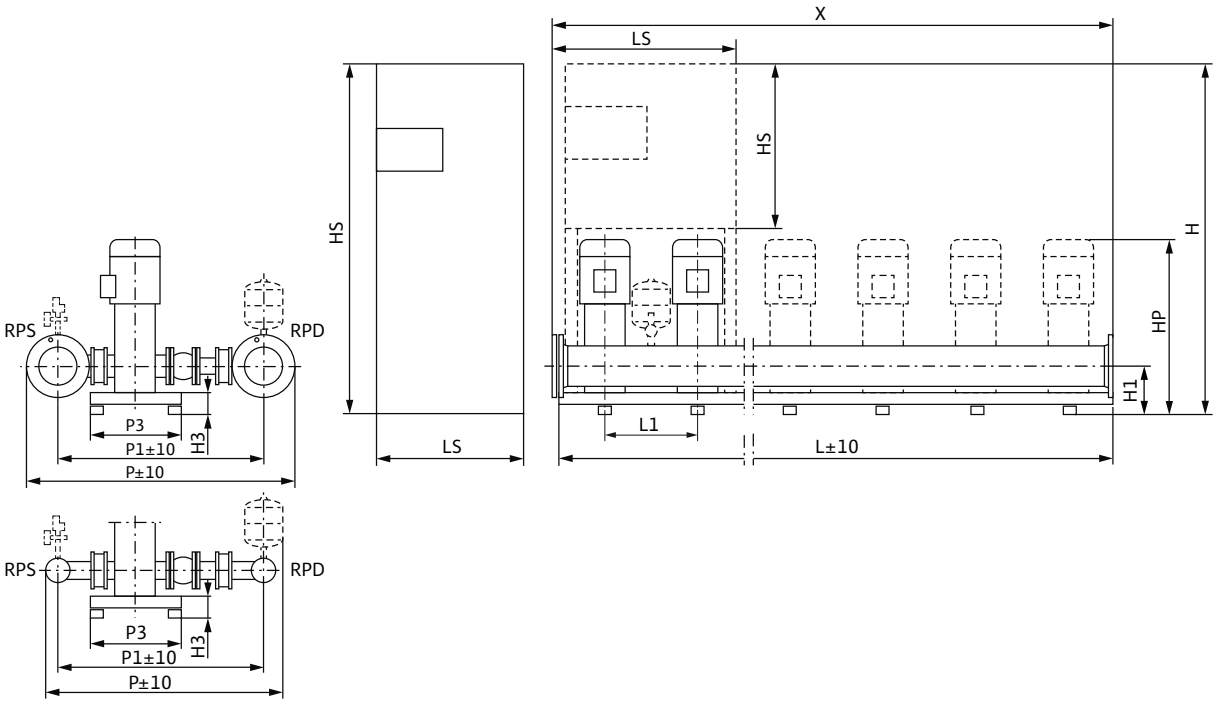

Sample systems are shown. Switchbox position depends on pump height.
Accessories (to be ordered separately): Optional WMS low-water cut-out switchgear kit
Installation surface: flat and horizontal
Installation location: dry, well ventilated and frost-proof

Dimensions, weights

Wilo-Comfort CO(R)- 5...	Nominal diameters of the pipe connections on suction side	Nominal diameters of pipe connections on the pressure side	Dimensions																Weight approx.	
											CO	COR	CO	COR	CO	COR	CO	COR	CO	COR
	RPS	*RPD*	*H1*	*H3*	*HP*	*L1*	*P*	*P1*	*P3*	*X*	*H*		*HS*		*L*		*LS*		*m*	
			mm																kg	
MVI 402/CC	Rp 2½	Rp 2½	140	90	633	300	782	629	300	1500	1670	1670	600	760	1500	1500	600	760	280	300
MVI 403/CC	Rp 2½	Rp 2½	140	90	637	300	782	629	300	1500	1670	1670	600	760	1500	1500	600	760	295	315
MVI 404/CC	Rp 2½	Rp 2½	140	90	661	300	782	629	300	1500	1670	1670	600	760	1500	1500	600	760	304	325
MVI 405/CC	Rp 2½	Rp 2½	140	90	685	300	782	629	300	1500	1670	1670	600	760	1500	1500	600	760	309	330
MVI 406/CC	Rp 2½	Rp 2½	140	90	759	300	782	629	300	1500	1670	1670	600	760	1500	1500	600	760	332	353
MVI 407/CC	Rp 2½	Rp 2½	140	90	783	300	782	629	300	1500	1670	1670	600	760	1500	1500	600	760	342	363
MVI 408/CC	Rp 2½	Rp 2½	140	90	807	300	782	629	300	1500	1670	1670	600	760	1500	1500	600	760	345	365
MVI 410/CC	Rp 2½	Rp 2½	140	90	855	300	782	629	300	1500	1870	1870	600	760	1500	1500	600	760	362	383

Technical data Wilo-Comfort CO-/COR-MVI.../CC

Pump curves

Wilo-Comfort CO(R)-6 MVI 402-410/CC

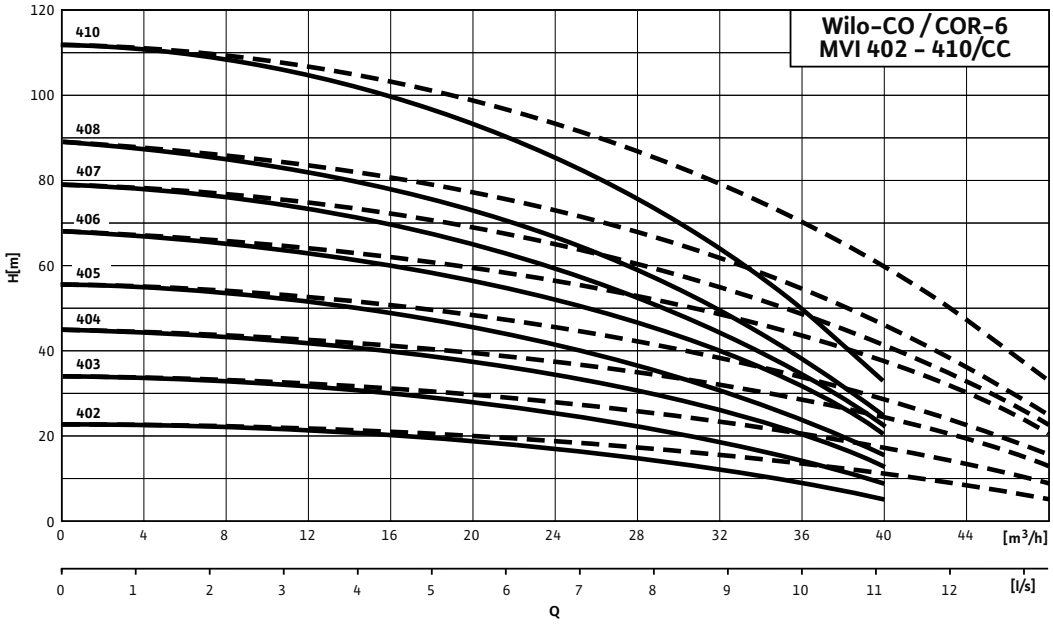

---- including standby pump

Motor data					
Wilo-Comfort CO(R)- 6...	**Nominal motor power**	**Nominal current 3~400 V, 50 Hz**	**Motor efficiency**		
	P_2	I_N	$\eta_{m\ 50\%}$	$\eta_{m\ 75\%}$	$\eta_{m\ 100\%}$
	kW	A	%		
MVI 402/CC	0.6	1.31	73.0	75.0	75.5
MVI 403/CC	0.8	1.77	76.0	77.4	77.4
MVI 404/CC	1.1	2.6	78.0	79.6	79.6
MVI 405/CC	1.1	2.6	78.0	79.6	79.6
MVI 406/CC	1.5	3.3	80.0	81.3	81.3
MVI 407/CC	1.5	3.3	80.0	81.3	81.3
MVI 408/CC	2.2	4.6	82.0	83.2	83.2
MVI 410/CC	2.2	4.6	82.0	83.2	83.2

Motor efficiency based on 400 V, 50 Hz

Technical data Wilo-Comfort CO-/COR-MVI.../CC

Dimension drawing

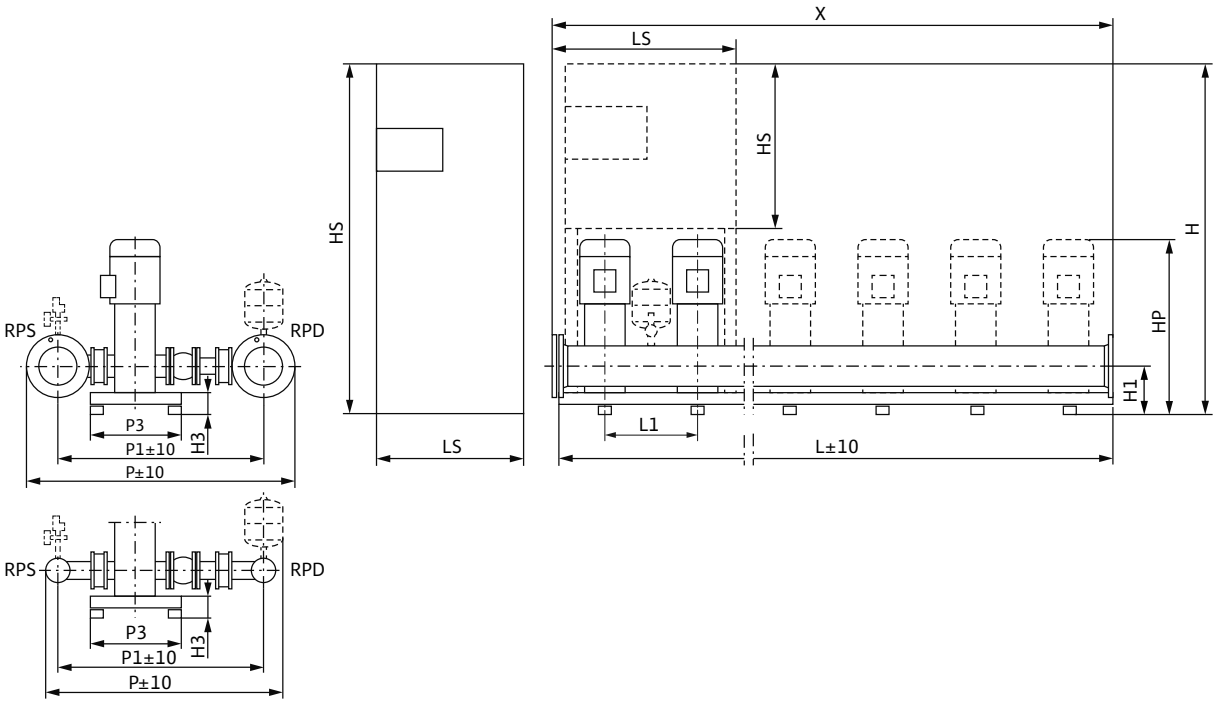

Sample systems are shown. Switchbox position depends on pump height.
Accessories (to be ordered separately): Optional WMS low-water cut-out switchgear kit
Installation surface: flat and horizontal
Installation location: dry, well ventilated and frost-proof

Dimensions, weights

Wilo-Comfort CO(R)- 6...	Nominal diameters of the pipe connections on suction side	Nominal diameters of pipe connections on the pressure side	Dimensions																Weight approx.	
											CO	COR	CO	COR	CO	COR	CO	COR	CO	COR
	RPS	*RPD*	*H1*	*H3*	*HP*	*L1*	*P*	*P1*	*P3*	*X*	*H*		*HS*		*L*		*LS*		*m*	
			mm																kg	
MVI 402/CC	Rp 2½	Rp 2½	140	90	633	300	782	629	300	1800	1670	1670	600	760	1800	1800	600	760	324	345
MVI 403/CC	Rp 2½	Rp 2½	140	90	637	300	782	629	300	1800	1670	1670	600	760	1800	1800	600	760	342	363
MVI 404/CC	Rp 2½	Rp 2½	140	90	661	300	782	629	300	1800	1670	1670	600	760	1800	1800	600	760	353	375
MVI 405/CC	Rp 2½	Rp 2½	140	90	685	300	782	629	300	1800	1670	1670	600	760	1800	1800	600	760	359	380
MVI 406/CC	Rp 2½	Rp 2½	140	90	759	300	782	629	300	1800	1670	1670	600	760	1800	1800	600	760	387	408
MVI 407/CC	Rp 2½	Rp 2½	140	90	783	300	782	629	300	1800	1670	1670	600	760	1800	1800	600	760	399	420
MVI 408/CC	Rp 2½	Rp 2½	140	90	807	300	782	629	300	1800	1670	1670	600	760	1800	1800	600	760	402	423
MVI 410/CC	Rp 2½	Rp 2½	140	90	855	300	782	629	300	1800	1870	1870	600	760	1800	1800	600	760	423	444

Technical data Wilo-Comfort CO-/COR-MVI.../CC

Pump curves

Wilo-Comfort CO(R)-2 MVI 802-810/CC

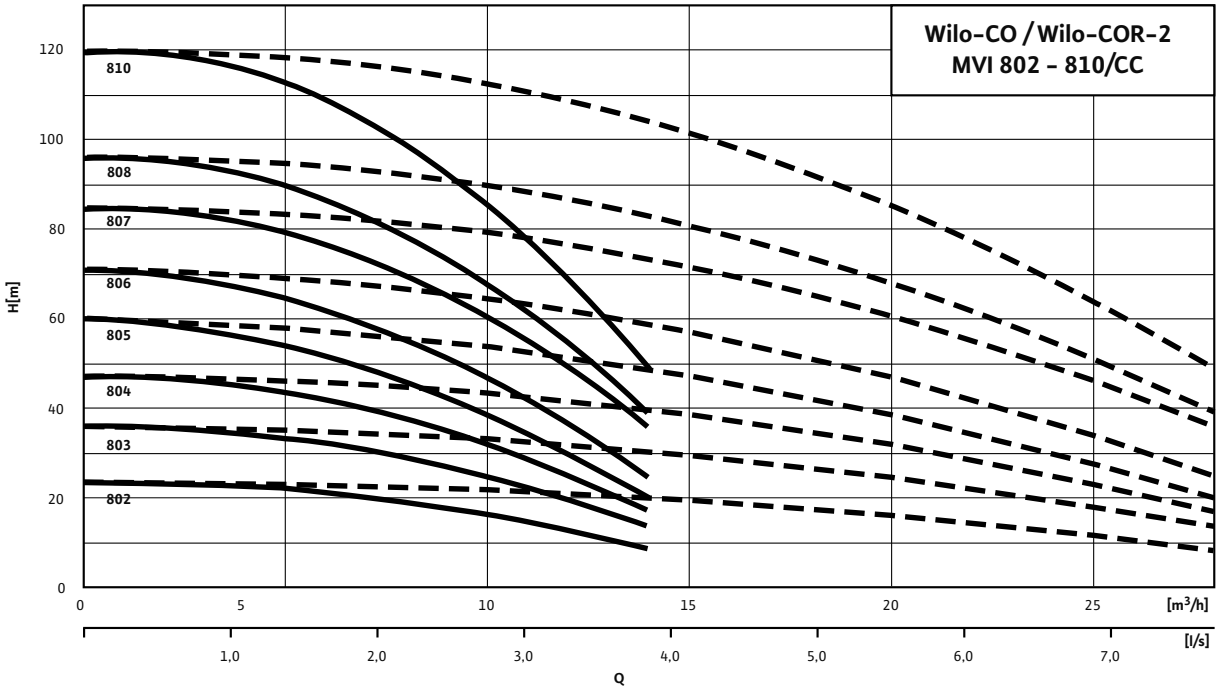

---- including standby pump

Motor data

Wilo-Comfort CO(R)- 2...	Nominal motor power	Nominal current 3~400 V, 50 Hz	Motor efficiency		
	P_2	I_N	$\eta_{m\ 50\%}$	$\eta_{m\ 75\%}$	$\eta_{m\ 100\%}$
	kW	A	%		
MVI 802/CC	0.8	1.77	76.0	77.4	77.4
MVI 803/CC	1.1	2.6	78.0	79.6	79.6
MVI 804/CC	1.5	3.3	80.0	81.3	81.3
MVI 805/CC	2.2	4.6	82.0	83.2	83.2
MVI 806/CC	2.2	4.6	82.0	83.2	83.2
MVI 807/CC	3	6.7	82.5	85.0	84.6
MVI 808/CC	3	6.7	82.5	85.0	84.6
MVI 810/CC	4	7.8	85.0	85.8	85.8

Motor efficiency based on 400 V, 50 Hz

Technical data Wilo-Comfort CO-/COR-MVI.../CC

Dimension drawing

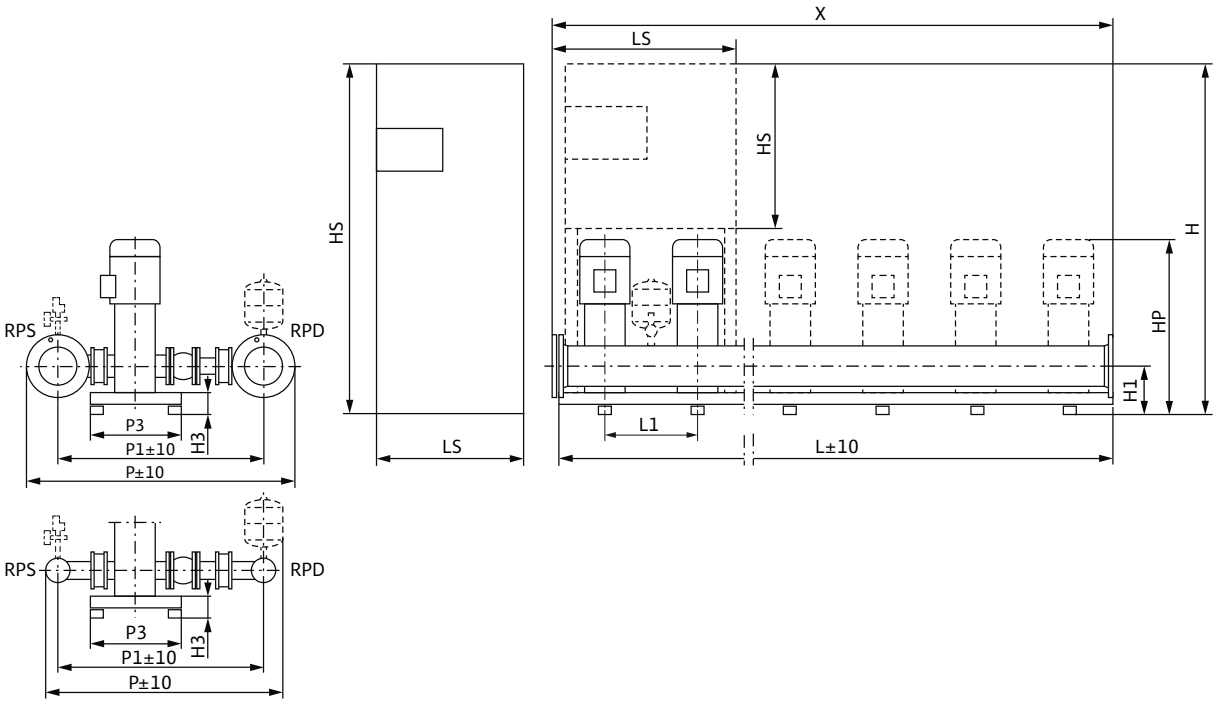

Sample systems are shown. Switchbox position depends on pump height.
Accessories (to be ordered separately): Optional WMS low-water cut-out switchgear kit
Installation surface: flat and horizontal
Installation location: dry, well ventilated and frost-proof

Dimensions, weights

Wilo-Comfort CO(R)- 2...	Nominal diameters of the pipe connections on suction side	Nominal diameters of pipe connections on the pressure side	Dimensions																Weight approx.	
											CO	COR	CO	COR	CO	COR	CO	COR	CO	COR
	RPS	*RPD*	*H1*	*H3*	*HP*	*L1*	*P*	*P1*	*P3*	*X*	*H*		*HS*		*L*		*LS*		*m*	
			mm																kg	
MVI 802/CC	Rp 2½	Rp 2½	170	90	664	300	825	684	450	600	1670	1670	600	760	600	600	600	600	169	192
MVI 803/CC	Rp 2½	Rp 2½	170	90	694	300	825	684	450	600	1670	1670	600	760	600	600	600	600	173	186
MVI 804/CC	Rp 2½	Rp 2½	170	90	774	300	825	684	450	600	1670	1670	600	760	600	600	600	600	185	198
MVI 805/CC	Rp 2½	Rp 2½	170	90	804	300	825	684	450	600	1670	1670	600	760	600	600	600	600	187	200
MVI 806/CC	Rp 2½	Rp 2½	170	90	834	300	825	684	450	600	1670	1670	600	760	600	600	600	600	192	205
MVI 807/CC	Rp 2½	Rp 2½	170	90	914	300	825	684	450	600	1870	1870	600	760	600	600	600	600	194	207
MVI 808/CC	Rp 2½	Rp 2½	170	90	944	300	825	684	450	600	1870	1870	600	760	600	600	600	600	207	220
MVI 810/CC	Rp 2½	Rp 2½	170	90	1009	300	825	684	450	600	1870	1870	600	760	600	600	600	600	211	224

Technical data Wilo-Comfort CO-/COR-MVI.../CC

Pump curves

Wilo-Comfort CO(R)-3 MVI 802-810/CC

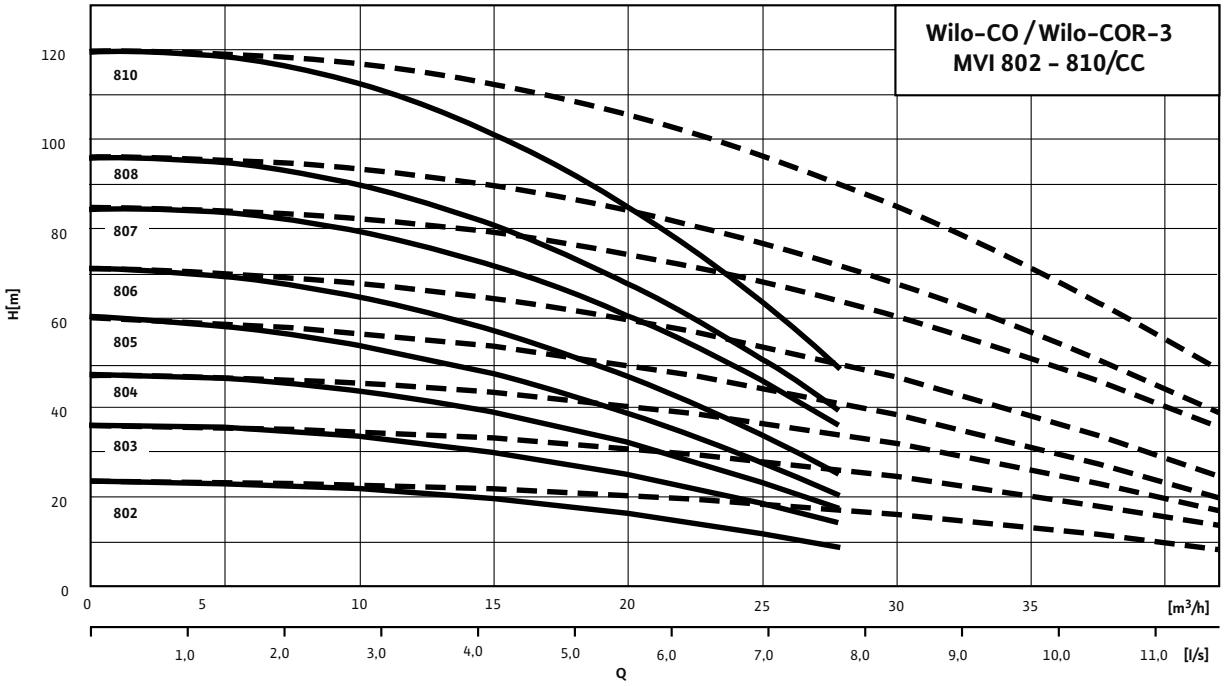

---- including standby pump

Motor data

Wilo-Comfort CO(R)- 3...	Nominal motor power	Nominal current 3~400 V, 50 Hz	Motor efficiency		
	P_2	I_N	$\eta_{m\ 50\%}$	$\eta_{m\ 75\%}$	$\eta_{m\ 100\%}$
	kW	A	%		
MVI 802/CC	0.8	1.77	76.0	77.4	77.4
MVI 803/CC	1.1	2.6	78.0	79.6	79.6
MVI 804/CC	1.5	3.3	80.0	81.3	81.3
MVI 805/CC	2.2	4.6	82.0	83.2	83.2
MVI 806/CC	2.2	4.6	82.0	83.2	83.2
MVI 807/CC	3	6.7	82.5	85.0	84.6
MVI 808/CC	3	6.7	82.5	85.0	84.6
MVI 810/CC	4	7.8	85.0	85.8	85.8

Motor efficiency based on 400 V, 50 Hz

Technical data Wilo-Comfort CO-/COR-MVI.../CC

Dimension drawing

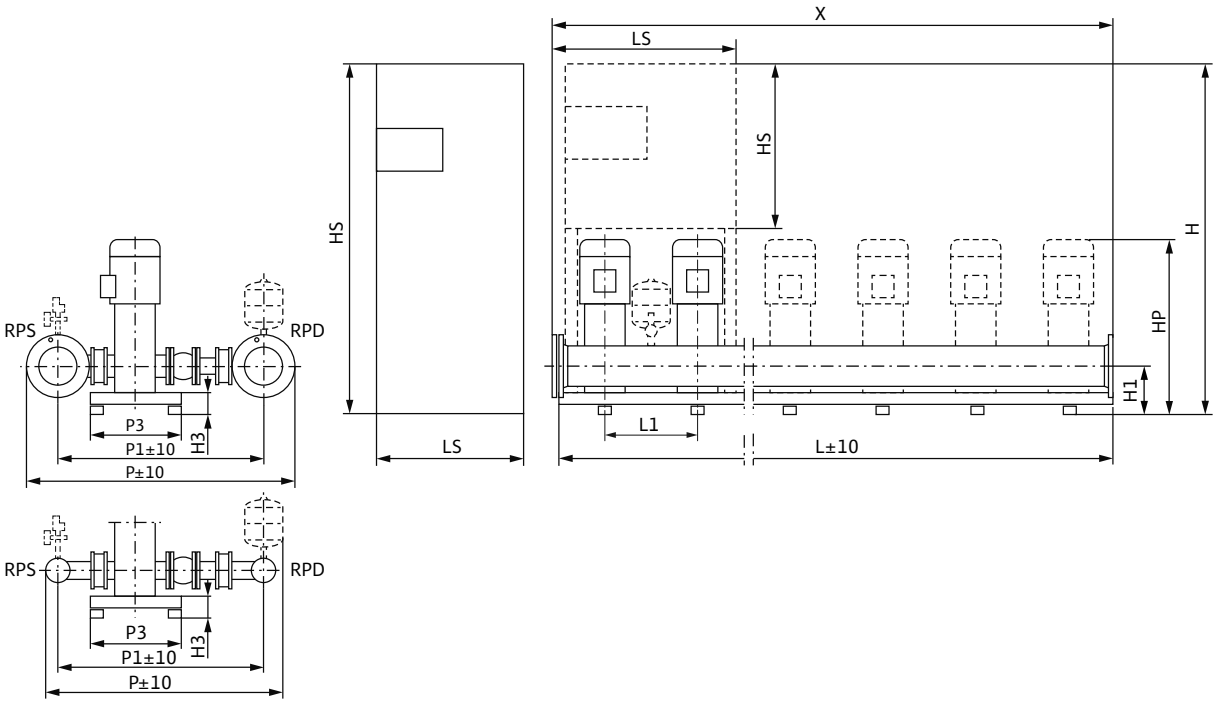

Sample systems are shown. Switchbox position depends on pump height.
Accessories (to be ordered separately): Optional WMS low-water cut-out switchgear kit
Installation surface: flat and horizontal
Installation location: dry, well ventilated and frost-proof

Dimensions, weights

Wilo-Comfort CO(R)- 3...	Nominal diameters of the pipe connections on suction side	Nominal diameters of pipe connections on the pressure side	Dimensions																Weight approx.	
											CO	COR	CO	COR	CO	COR	CO	COR	CO	COR
	RPS	*RPD*	*H1*	*H3*	*HP*	*L1*	*P*	*P1*	*P3*	*X*	*H*		*HS*		*L*		*LS*		*m*	
			mm																kg	
MVI 802/CC	Rp 2½	Rp 2½	170	90	664	300	825	684	450	900	1670	1670	600	760	900	900	600	600	231	243
MVI 803/CC	Rp 2½	Rp 2½	170	90	694	300	825	684	450	900	1670	1670	600	760	900	900	600	600	237	250
MVI 804/CC	Rp 2½	Rp 2½	170	90	774	300	825	684	450	900	1670	1670	600	760	900	900	600	600	255	267
MVI 805/CC	Rp 2½	Rp 2½	170	90	804	300	825	684	450	900	1670	1670	600	760	900	900	600	600	258	270
MVI 806/CC	Rp 2½	Rp 2½	170	90	834	300	825	684	450	900	1670	1670	600	760	900	900	600	600	266	278
MVI 807/CC	Rp 2½	Rp 2½	170	90	914	300	825	684	450	900	1870	1870	600	760	900	900	600	600	269	281
MVI 808/CC	Rp 2½	Rp 2½	170	90	944	300	825	684	450	900	1870	1870	600	760	900	900	600	600	288	300
MVI 810/CC	Rp 2½	Rp 2½	170	90	1009	300	825	684	450	900	1870	1870	600	760	900	900	600	600	295	307

Technical data Wilo-Comfort CO-/COR-MVI.../CC

Pump curves

Wilo-Comfort CO(R)-4 MVI 802-810/CC

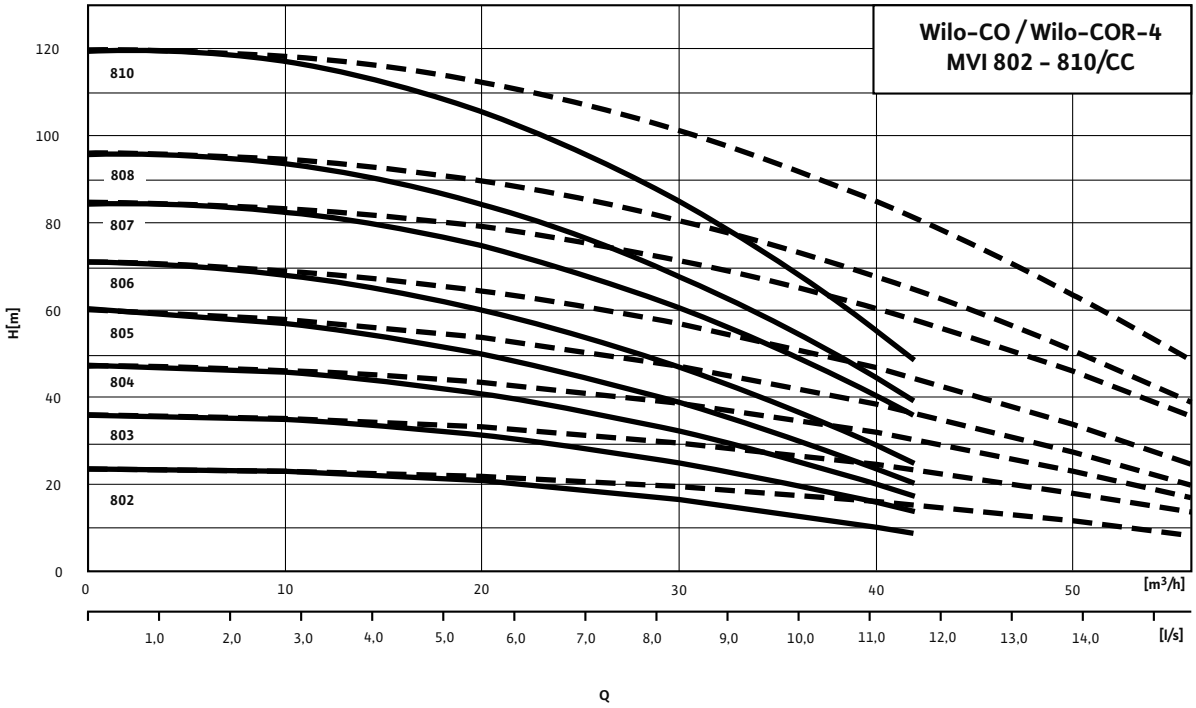

---- including standby pump

Motor data

Wilo-Comfort CO(R)- 4...	Nominal motor power	Nominal current 3~400 V, 50 Hz	Motor efficiency		
	P_2	I_N	$\eta_{m\ 50\%}$	$\eta_{m\ 75\%}$	$\eta_{m\ 100\%}$
	kW	A	%		
MVI 802/CC	0.8	1.77	76.0	77.4	77.4
MVI 803/CC	1.1	2.6	78.0	79.6	79.6
MVI 804/CC	1.5	3.3	80.0	81.3	81.3
MVI 805/CC	2.2	4.6	82.0	83.2	83.2
MVI 806/CC	2.2	4.6	82.0	83.2	83.2
MVI 807/CC	3	6.7	82.5	85.0	84.6
MVI 808/CC	3	6.7	82.5	85.0	84.6
MVI 810/CC	4	7.8	85.0	85.8	85.8

Motor efficiency based on 400 V, 50 Hz

Technical data Wilo-Comfort CO-/COR-MVI.../CC

Dimension drawing

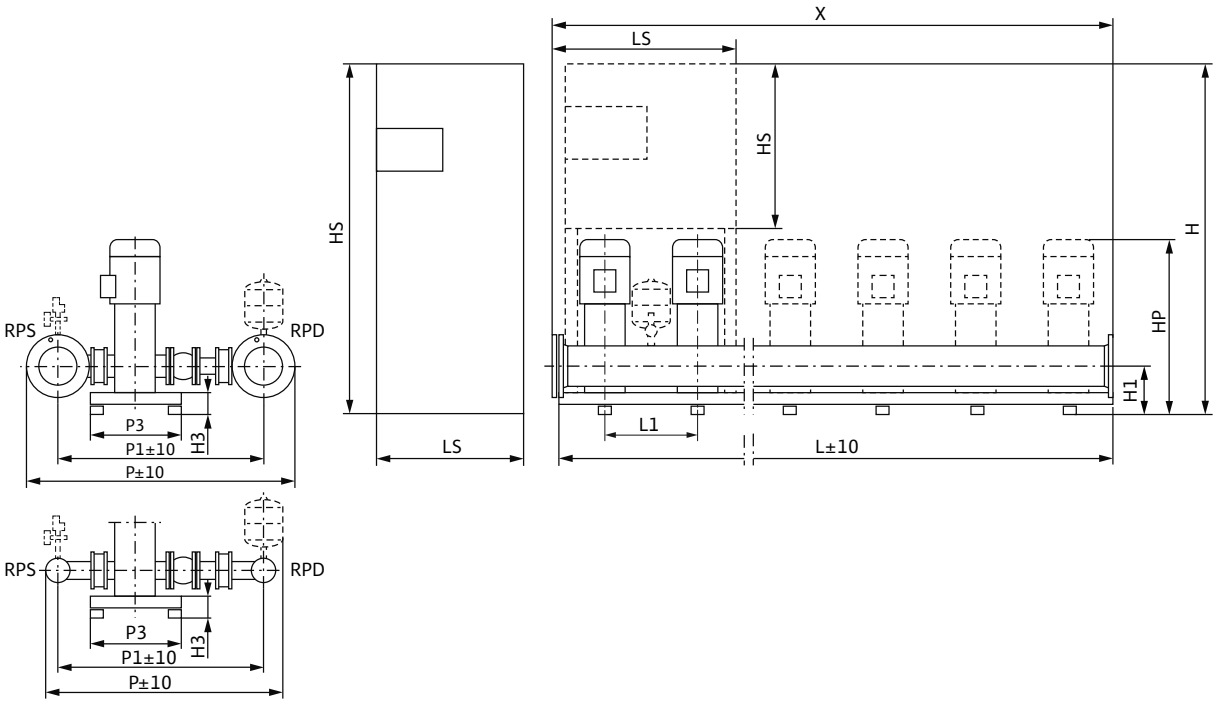

Sample systems are shown. Switchbox position depends on pump height.
Accessories (to be ordered separately): Optional WMS low-water cut-out switchgear kit
Installation surface: flat and horizontal
Installation location: dry, well ventilated and frost-proof

Dimensions, weights

Wilo-Comfort CO(R)- 4...	Nominal diameters of the pipe connections on suction side	Nominal diameters of pipe connections on the pressure side	Dimensions																Weight approx.	
											CO	COR	CO	COR	CO	COR	CO	COR	CO	COR
	RPS	*RPD*	*H1*	*H3*	*HP*	*L1*	*P*	*P1*	*P3*	*X*	*H*		*HS*		*L*		*LS*		*m*	
			mm																kg	
MVI 802/CC	Rp 2½	Rp 2½	170	90	664	300	825	684	470	1200	1670	1670	600	760	1200	1200	600	600	290	302
MVI 803/CC	Rp 2½	Rp 2½	170	90	694	300	825	684	470	1200	1670	1670	600	760	1200	1200	600	600	298	310
MVI 804/CC	Rp 2½	Rp 2½	170	90	774	300	825	684	470	1200	1670	1670	600	760	1200	1200	600	600	322	334
MVI 805/CC	Rp 2½	Rp 2½	170	90	804	300	825	684	470	1200	1670	1670	600	760	1200	1200	600	600	326	338
MVI 806/CC	Rp 2½	Rp 2½	170	90	834	300	825	684	470	1200	1670	1670	600	760	1200	1200	600	600	336	348
MVI 807/CC	Rp 2½	Rp 2½	170	90	914	300	825	684	470	1200	1870	1870	600	760	1200	1200	600	600	340	352
MVI 808/CC	Rp 2½	Rp 2½	170	90	944	300	825	684	470	1200	1870	1870	600	760	1200	1200	600	600	366	378
MVI 810/CC	Rp 2½	Rp 2½	170	90	1009	300	825	684	470	1200	1870	1870	600	760	1200	1200	600	600	375	387

Technical data Wilo-Comfort CO-/COR-MVI.../CC

Pump curves

Wilo-Comfort CO(R)-5 MVI 802-810/CC

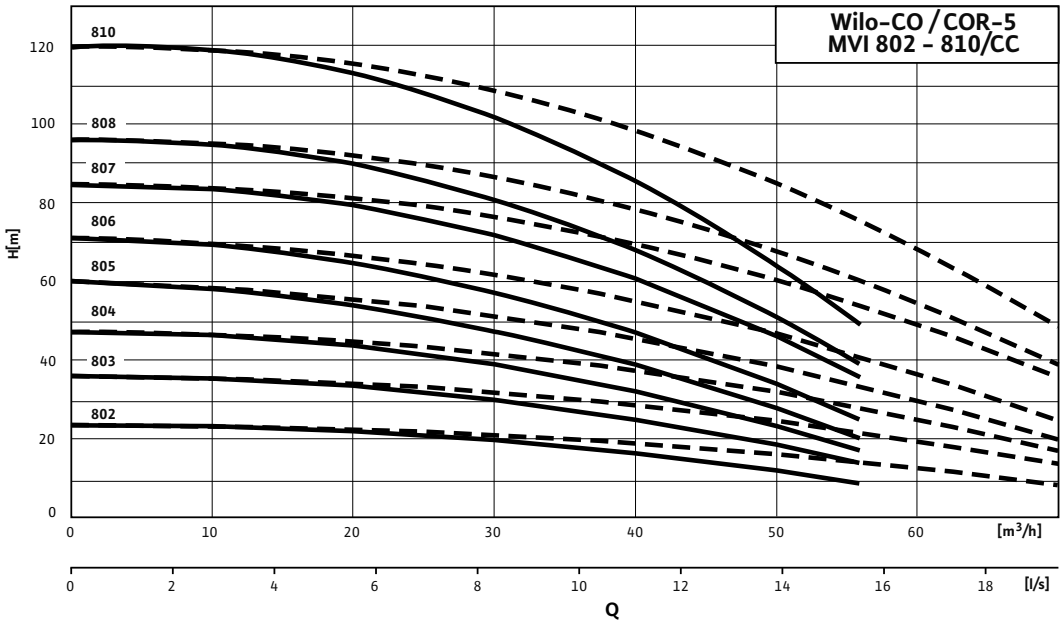

---- including standby pump

Motor data

Wilo-Comfort CO(R)- 5...	Nominal motor power	Nominal current 3~400 V, 50 Hz	Motor efficiency		
	P_2	I_N	$\eta_{m\ 50\%}$	$\eta_{m\ 75\%}$	$\eta_{m\ 100\%}$
	kW	A	%		
MVI 802/CC	0.8	1.77	76.0	77.4	77.4
MVI 803/CC	1.1	2.6	78.0	79.6	79.6
MVI 804/CC	1.5	3.3	80.0	81.3	81.3
MVI 805/CC	2.2	4.6	82.0	83.2	83.2
MVI 806/CC	2.2	4.6	82.0	83.2	83.2
MVI 807/CC	3	6.7	82.5	85.0	84.6
MVI 808/CC	3	6.7	82.5	85.0	84.6
MVI 810/CC	4	7.8	85.0	85.8	85.8

Motor efficiency based on 400 V, 50 Hz

Technical data Wilo-Comfort CO-/COR-MVI.../CC

Dimension drawing

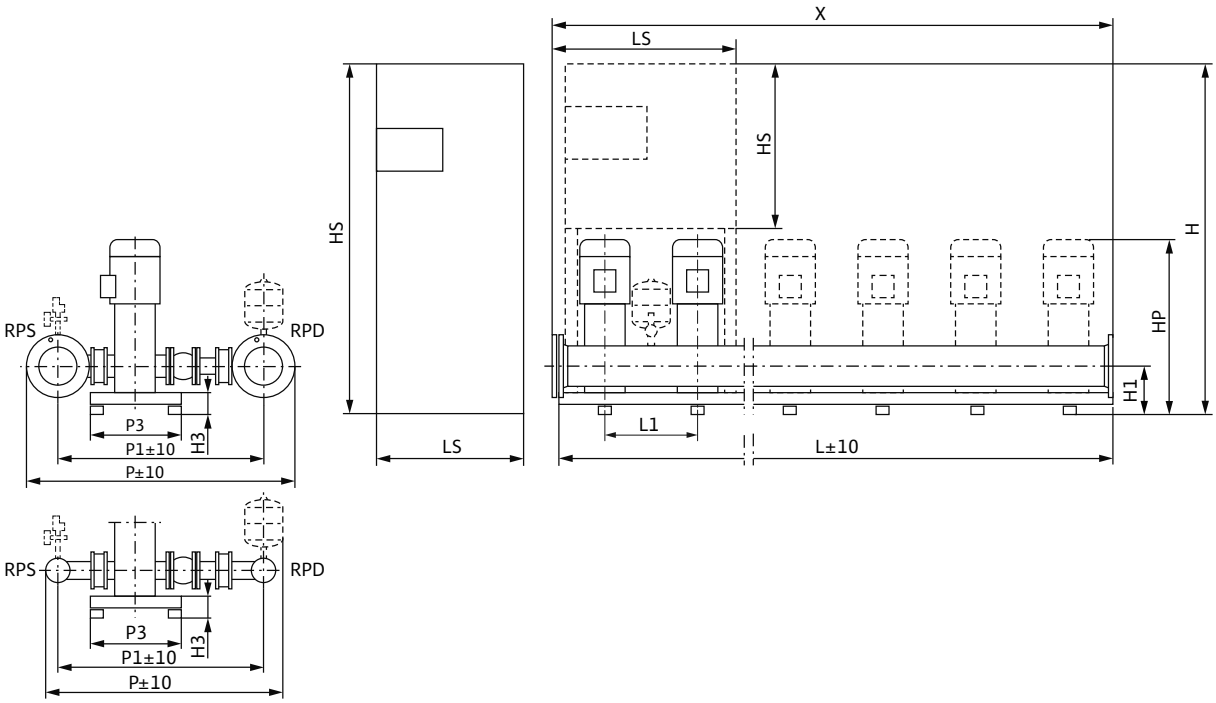

Sample systems are shown. Switchbox position depends on pump height.
Accessories (to be ordered separately): Optional WMS low-water cut-out switchgear kit
Installation surface: flat and horizontal
Installation location: dry, well ventilated and frost-proof

Dimensions, weights

Wilo-Comfort CO(R)- 5...	Nominal diameters of the pipe connections on suction side	Nominal diameters of pipe connections on the pressure side	Dimensions																Weight approx.	
											CO	COR	CO	COR	CO	COR	CO	COR	CO	COR
	RPS	*RPD*	*H1*	*H3*	*HP*	*L1*	*P*	*P1*	*P3*	*X*	*H*		*HS*		*L*		*LS*		*m*	
			mm																kg	
MVI 802/CC	Rp 3	Rp 3	170	90	664	300	839	698	470	1500	1670	1670	600	760	1500	1500	600	760	372	394
MVI 803/CC	Rp 3	Rp 3	170	90	694	300	839	698	470	1500	1670	1670	600	760	1500	1500	600	760	382	404
MVI 804/CC	Rp 3	Rp 3	170	90	774	300	839	698	470	1500	1670	1670	600	760	1500	1500	600	760	412	434
MVI 805/CC	Rp 3	Rp 3	170	90	804	300	839	698	470	1500	1670	1670	600	760	1500	1500	600	760	417	439
MVI 806/CC	Rp 3	Rp 3	170	90	834	300	839	698	470	1500	1670	1670	600	760	1500	1500	600	760	429	451
MVI 807/CC	Rp 3	Rp 3	170	90	914	300	839	698	470	1500	1870	1870	600	760	1500	1500	600	760	434	456
MVI 808/CC	Rp 3	Rp 3	170	90	944	300	839	698	470	1500	1870	1870	600	760	1500	1500	600	760	467	489
MVI 810/CC	Rp 3	Rp 3	170	90	1009	300	839	698	470	1500	1870	1870	600	760	1500	1500	600	760	478	500

Technical data Wilo-Comfort CO-/COR-MVI.../CC

Pump curves

Wilo-Comfort CO(R)-6 MVI 802-810/CC

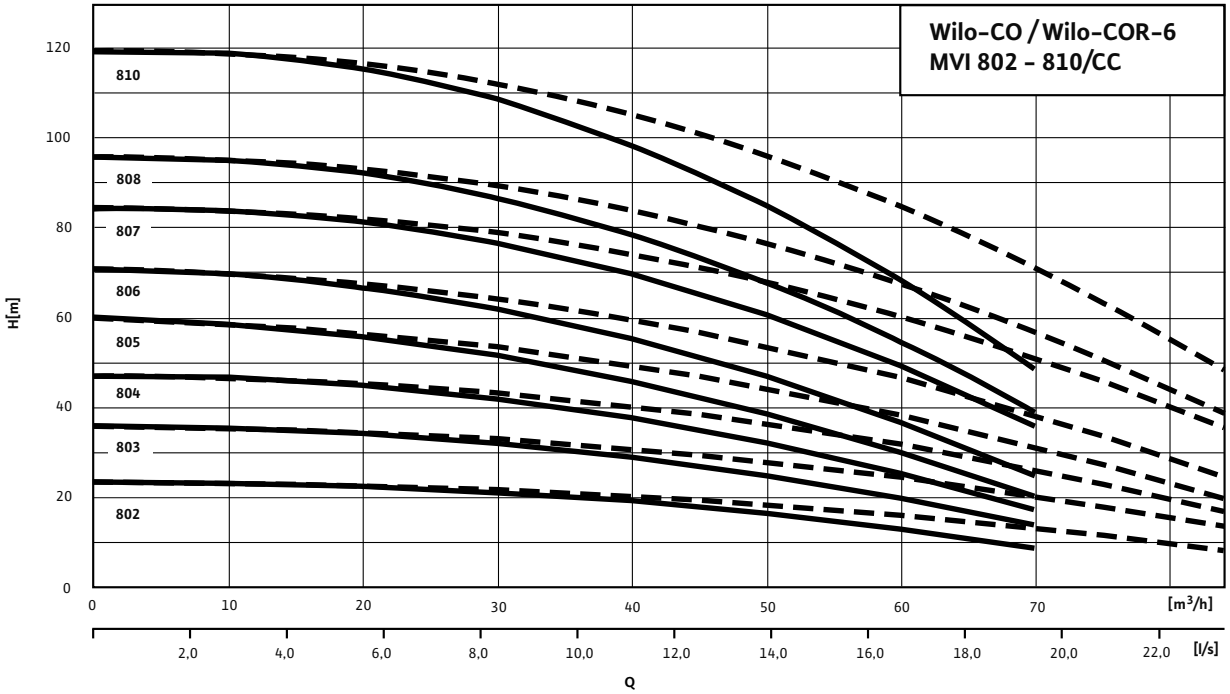

---- including standby pump

Motor data

Wilo-Comfort CO(R)- 6...	Nominal motor power	Nominal current 3~400 V, 50 Hz	Motor efficiency		
	P_2	I_N	$\eta_{m\ 50\%}$	$\eta_{m\ 75\%}$	$\eta_{m\ 100\%}$
	kW	A	%		
MVI 802/CC	0.8	1.77	76.0	77.4	77.4
MVI 803/CC	1.1	2.6	78.0	79.6	79.6
MVI 804/CC	1.5	3.3	80.0	81.3	81.3
MVI 805/CC	2.2	4.6	82.0	83.2	83.2
MVI 806/CC	2.2	4.6	82.0	83.2	83.2
MVI 807/CC	3	6.7	82.5	85.0	84.6
MVI 808/CC	3	6.7	82.5	85.0	84.6
MVI 810/CC	4	7.8	85.0	85.8	85.8

Motor efficiency based on 400 V, 50 Hz

Technical data Wilo-Comfort CO-/COR-MVI.../CC

Dimension drawing

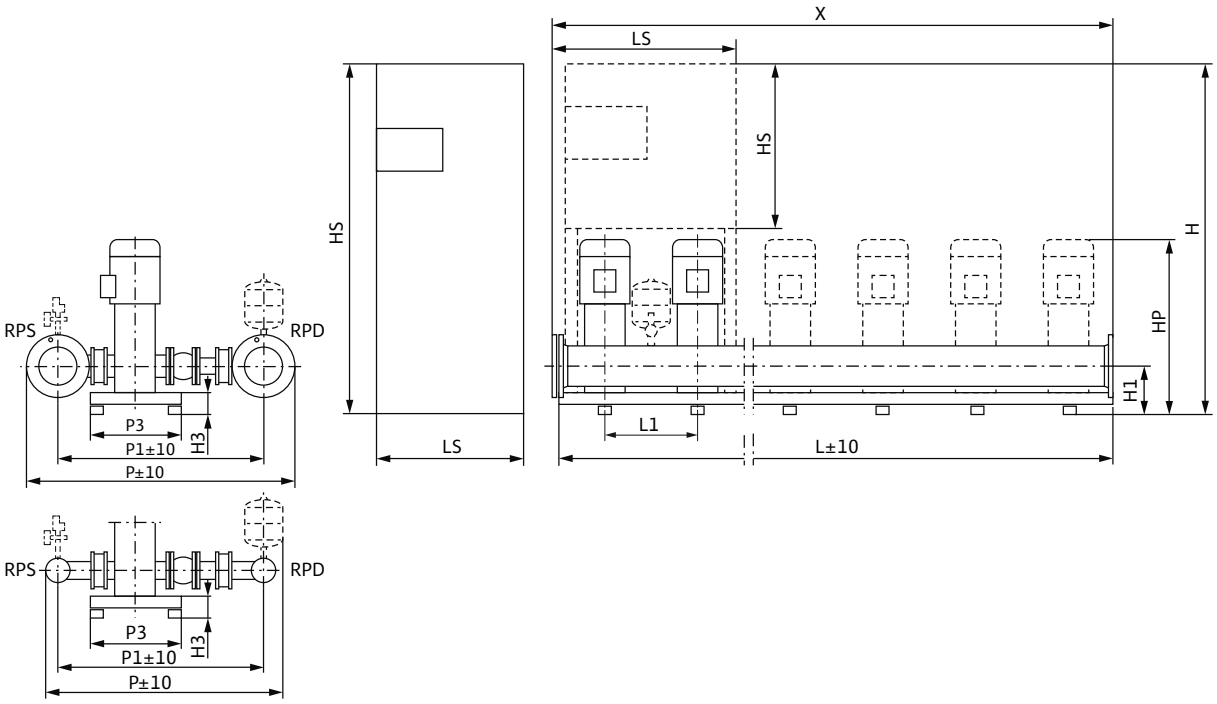

Sample systems are shown. Switchbox position depends on pump height.
Accessories (to be ordered separately): Optional WMS low-water cut-out switchgear kit
Installation surface: flat and horizontal
Installation location: dry, well ventilated and frost-proof

Dimensions, weights

Wilo-Comfort CO(R)- 6...	Nominal diameters of the pipe connections on suction side	Nominal diameters of pipe connections on the pressure side	Dimensions																Weight approx.	
											CO	COR	CO	COR	CO	COR	CO	COR	CO	COR
	RPS	*RPD*	*H1*	*H3*	*HP*	*L1*	*P*	*P1*	*P3*	*X*	*H*		*HS*		*L*		*LS*		*m*	
			mm																kg	
MVI 802/CC	Rp 3	Rp 3	170	90	664	300	839	698	470	1800	1670	1670	600	760	1800	1800	600	760	428	450
MVI 803/CC	Rp 3	Rp 3	170	90	694	300	839	698	470	1800	1670	1670	600	760	1800	1800	600	760	439	462
MVI 804/CC	Rp 3	Rp 3	170	90	774	300	839	698	470	1800	1670	1670	600	760	1800	1800	600	760	476	499
MVI 805/CC	Rp 3	Rp 3	170	90	804	300	839	698	470	1800	1670	1670	600	760	1800	1800	600	760	482	505
MVI 806/CC	Rp 3	Rp 3	170	90	834	300	839	698	470	1800	1670	1670	600	760	1800	1800	600	760	497	519
MVI 807/CC	Rp 3	Rp 3	170	90	914	300	839	698	470	1800	1870	1870	600	760	1800	1800	600	760	503	525
MVI 808/CC	Rp 3	Rp 3	170	90	944	300	839	698	470	1800	1870	1870	600	760	1800	1800	600	760	542	564
MVI 810/CC	Rp 3	Rp 3	170	90	1009	300	839	698	470	1800	1870	1870	600	760	1800	1800	600	760	555	578

Technical data Wilo-Comfort CO-/COR-MVI.../CC

Pump curves

Wilo-Comfort CO(R)-2 MVI 1602-1611-6/CC

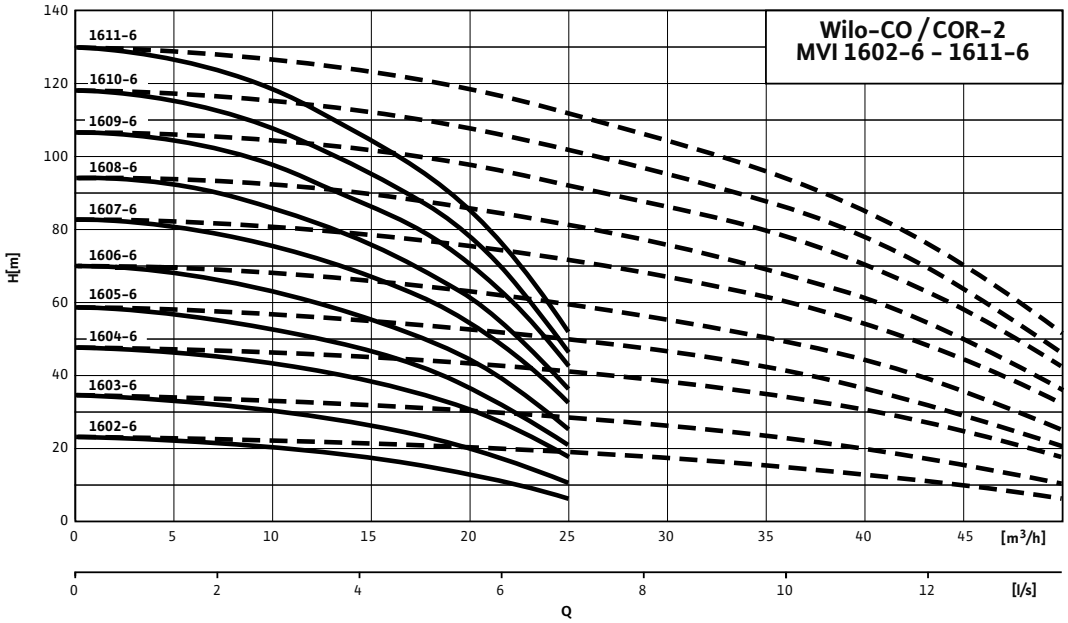

---- including standby pump

Motor data					
Wilo-Comfort CO(R)- 2...	**Nominal motor power**	**Nominal current 3~400 V, 50 Hz**	**Motor efficiency**		
	P_2	I_N	$\eta_{m\ 50\%}$	$\eta_{m\ 75\%}$	$\eta_{m\ 100\%}$
	kW	A	%		
MVI 1602-6/CC	1.5	3.3	80.0	81.3	81.3
MVI 1603-6/CC	2.2	4.6	82.0	83.2	83.2
MVI 1604-6/CC	3	6.7	82.5	85.0	84.6
MVI 1605-6/CC	4	7.8	85.0	85.8	85.8
MVI 1606-6/CC	4	7.8	85.0	85.8	85.8
MVI 1607-6/CC	5.5	10.7	85.2	86.9	88.1
MVI 1608-6/CC	5.5	10.7	85.2	86.9	88.1
MVI 1609-6/CC	7.5	14	88.5	89.9	89.5
MVI 1610-6/CC	7.5	14	88.5	89.9	89.5
MVI 1611-6/CC	7.5	14	88.5	89.9	89.5

Motor efficiency based on 400 V, 50 Hz

Technical data Wilo-Comfort CO-/COR-MVI.../CC

Dimension drawing

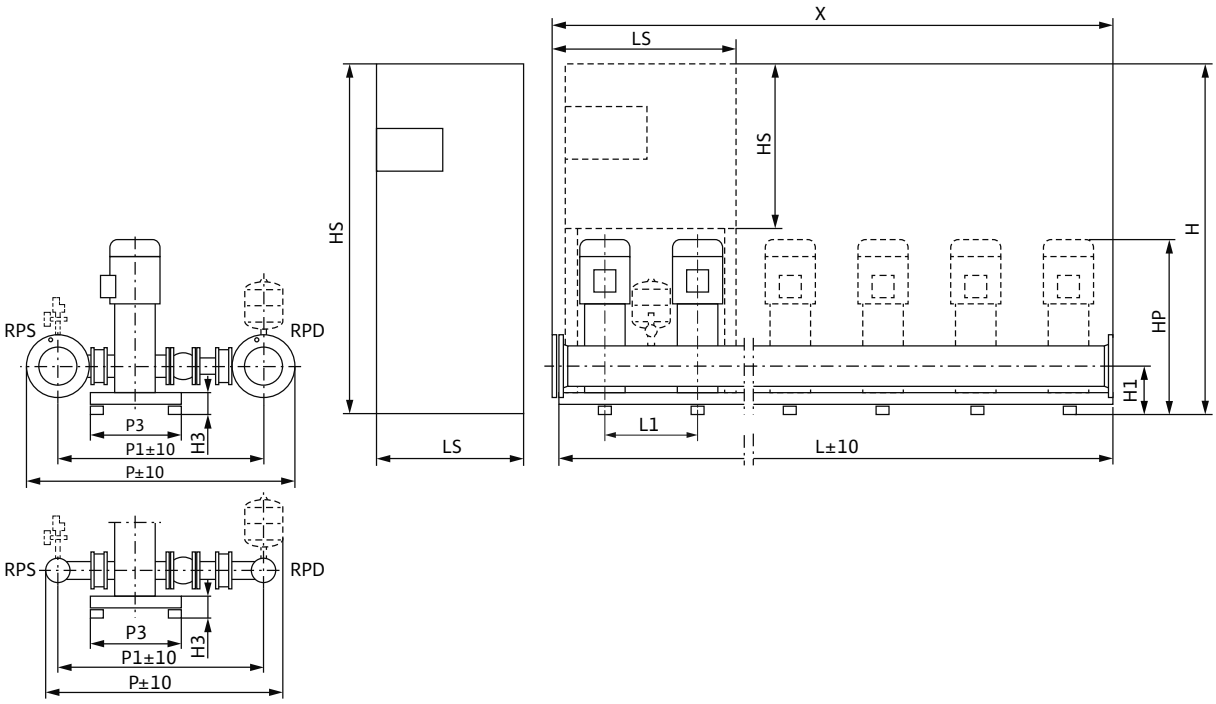

Sample systems are shown. Switchbox position depends on pump height.
Accessories (to be ordered separately): Optional WMS low-water cut-out switchgear kit
Installation surface: flat and horizontal
Installation location: dry, well ventilated and frost-proof

Dimensions, weights

Wilo-Comfort CO(R)- 2...	Nominal diameters of the pipe connections on suction side	Nominal diameters of pipe connections on the pressure side	Dimensions																Weight approx.	
											CO	COR	CO	COR	CO	COR	CO	COR	CO	COR
	RPS	*RPD*	*H1*	*H3*	*HP*	*L1*	*P*	*P1*	*P3*	*X*	*H*		*HS*		*L*		*LS*		*m*	
			mm																kg	
MVI 1602-6/CC	Rp 3	Rp 3	185	105	754	300	964	803	450	600	1685	1685	600	760	600	600	600	600	175	196
MVI 1603-6/CC	Rp 3	Rp 3	185	105	829	300	964	803	450	600	1685	1685	600	760	600	600	600	600	183	204
MVI 1604-6/CC	Rp 3	Rp 3	185	105	879	300	964	803	450	600	1885	1885	600	760	600	600	600	600	197	218
MVI 1605-6/CC	Rp 3	Rp 3	185	105	954	300	964	803	450	600	1885	1885	600	760	600	600	600	600	216	241
MVI 1606-6/CC	Rp 3	Rp 3	185	105	1034	300	964	803	450	600	1885	1885	600	760	600	600	600	600	219	244
MVI 1607-6/CC	Rp 3	Rp 3	185	105	1109	300	964	803	450	600	1885	1900	760	1900	600	600	600	600	233	373
MVI 1608-6/CC	Rp 3	Rp 3	185	105	1109	300	964	803	450	600	1885	1900	760	1900	600	600	600	600	234	374
MVI 1609-6/CC	Rp 3	Rp 3	185	105	1203	500	964	803	470	1000	1885	1900	760	1900	1080	1000	600	600	311	455
MVI 1610-6/CC	Rp 3	Rp 3	185	105	1203	500	964	803	470	1000	1885	1900	760	1900	1080	1000	600	600	316	462
MVI 1611-6/CC	Rp 3	Rp 3	185	105	1278	500	964	803	470	1000	1885	1900	760	1900	1080	1000	600	600	316	462

Technical data Wilo-Comfort CO-/COR-MVI.../CC

Pump curves

Wilo-Comfort CO(R)-3 MVI 1602-1611-6/CC

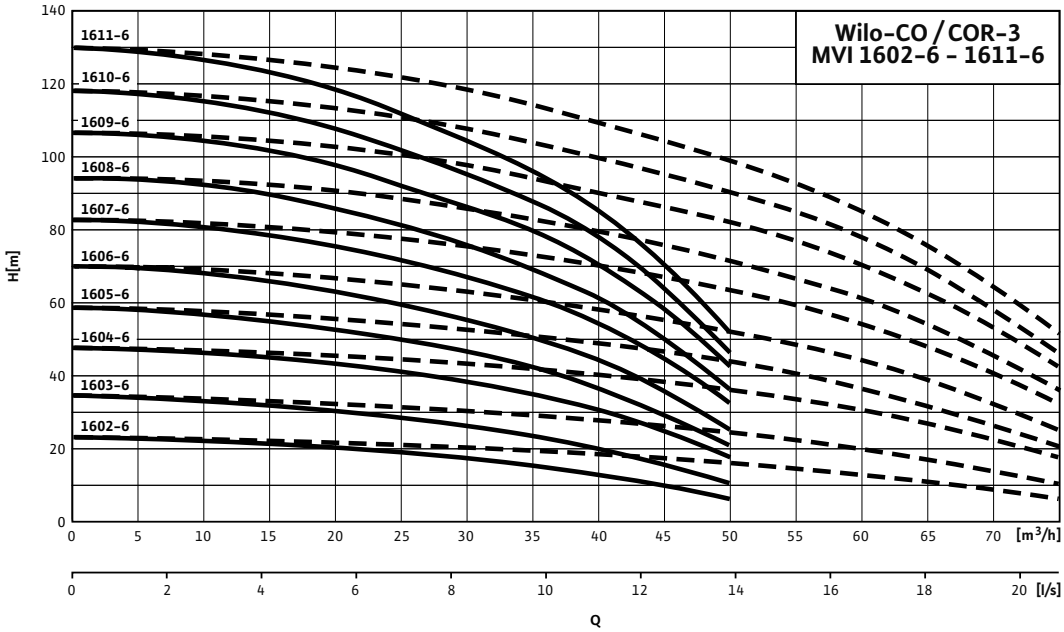

---- including standby pump

Motor data

Wilo-Comfort CO(R)- 3...	Nominal motor power	Nominal current 3~400 V, 50 Hz	Motor efficiency		
	P_2	I_N	$\eta_{m\ 50\%}$	$\eta_{m\ 75\%}$	$\eta_{m\ 100\%}$
	kW	A	%		
MVI 1602-6/CC	1.5	3.3	80.0	81.3	81.3
MVI 1603-6/CC	2.2	4.6	82.0	83.2	83.2
MVI 1604-6/CC	3	6.7	82.5	85.0	84.6
MVI 1605-6/CC	4	7.8	85.0	85.8	85.8
MVI 1606-6/CC	4	7.8	85.0	85.8	85.8
MVI 1607-6/CC	5.5	10.7	85.2	86.9	88.1
MVI 1608-6/CC	5.5	10.7	85.2	86.9	88.1
MVI 1609-6/CC	7.5	14	88.5	89.9	89.5
MVI 1610-6/CC	7.5	14	88.5	89.9	89.5
MVI 1611-6/CC	7.5	14	88.5	89.9	89.5

Motor efficiency based on 400 V, 50 Hz

Technical data Wilo-Comfort CO-/COR-MVI.../CC

Dimension drawing

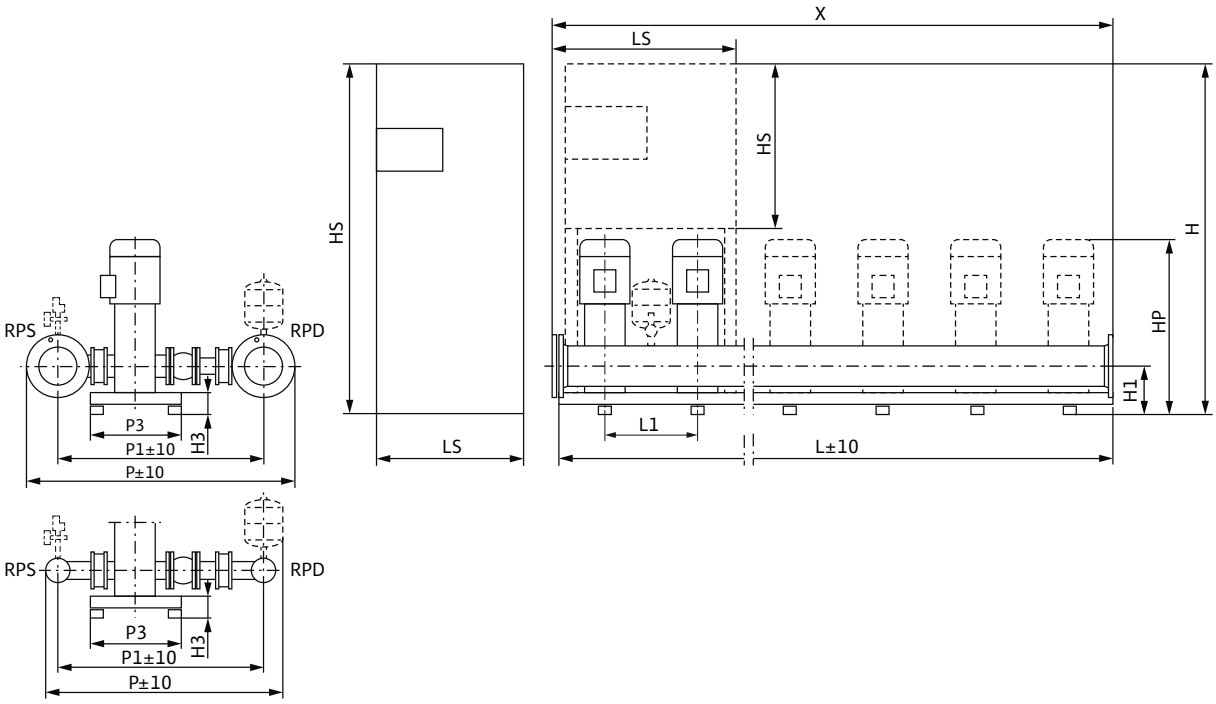

Sample systems are shown. Switchbox position depends on pump height.
Accessories (to be ordered separately): Optional WMS low-water cut-out switchgear kit
Installation surface: flat and horizontal
Installation location: dry, well ventilated and frost-proof

Dimensions, weights

Wilo-Comfort CO(R)- 3...	Nominal diameters of the pipe connections on suction side	Nominal diameters of pipe connections on the pressure side	Dimensions																Weight approx.	
											CO	COR	CO	COR	CO	COR	CO	COR	CO	COR
	RPS	*RPD*	*H1*	*H3*	*HP*	*L1*	*P*	*P1*	*P3*	*X*	*H*		*HS*		*L*		*LS*		*m*	
			mm																kg	
MVI 1602-6/CC	DN 100	DN 100	185	105	754	300	1045	828	450	900	1685	1685	600	760	900	900	600	600	248	269
MVI 1603-6/CC	DN 100	DN 100	185	105	829	300	1045	828	450	900	1685	1685	600	760	900	900	600	600	260	281
MVI 1604-6/CC	DN 100	DN 100	185	105	879	300	1045	828	450	900	1885	1885	600	760	900	900	600	600	278	299
MVI 1605-6/CC	DN 100	DN 100	185	105	954	300	1045	828	450	900	1885	1885	600	760	900	900	600	600	308	333
MVI 1606-6/CC	DN 100	DN 100	185	105	1034	300	1045	828	450	900	1885	1885	600	760	900	900	600	600	313	338
MVI 1607-6/CC	DN 100	DN 100	185	105	1109	300	1045	828	450	900	1885	1900	760	1900	900	900	600	800	331	496
MVI 1608-6/CC	DN 100	DN 100	185	105	1109	300	1045	828	450	900	1885	1900	760	1900	900	900	600	800	332	497
MVI 1609-6/CC	DN 100	DN 100	185	105	1203	500	1045	828	470	1500	1885	1900	760	1900	1580	1500	600	800	327	596
MVI 1610-6/CC	DN 100	DN 100	185	105	1203	500	1045	828	470	1500	1885	1900	760	1900	1580	1500	600	800	429	598
MVI 1611-6/CC	DN 100	DN 100	185	105	1278	500	1045	828	470	1500	1885	1900	760	1900	1580	1500	600	800	435	604

Technical data Wilo-Comfort CO-/COR-MVI.../CC

Pump curves

Wilo-Comfort CO(R)-4 MVI 1602-1611-6/CC

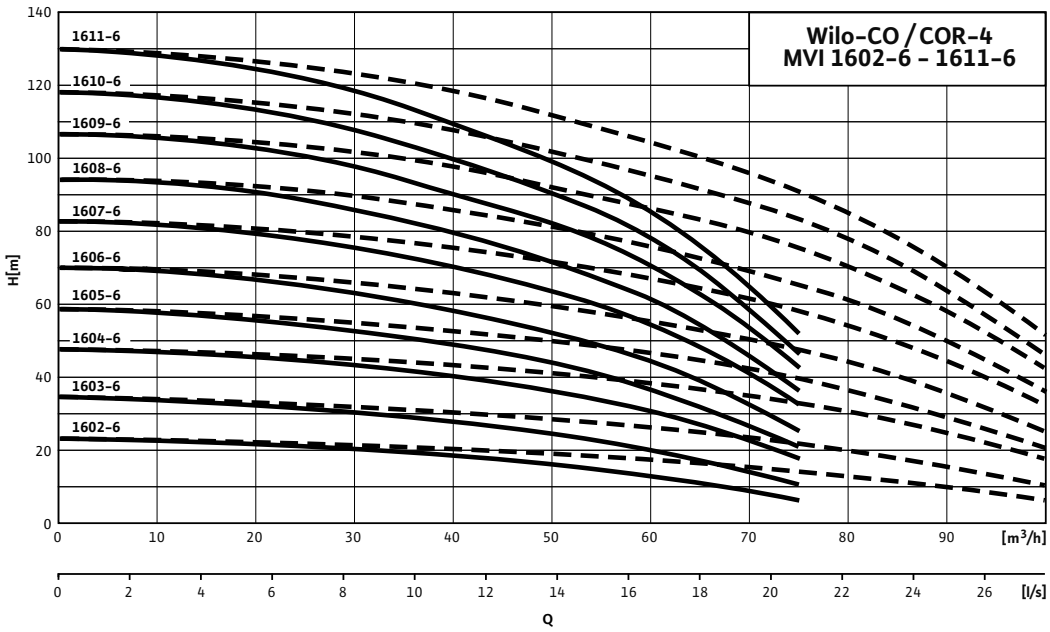

---- including standby pump

Motor data

Wilo-Comfort CO(R)- 4...	Nominal motor power	Nominal current 3~400 V, 50 Hz	Motor efficiency		
	P_2	I_N	$\eta_{m\ 50\%}$	$\eta_{m\ 75\%}$	$\eta_{m\ 100\%}$
	kW	A	%		
MVI 1602-6/CC	1.5	3.3	80.0	81.3	81.3
MVI 1603-6/CC	2.2	4.6	82.0	83.2	83.2
MVI 1604-6/CC	3	6.7	82.5	85.0	84.6
MVI 1605-6/CC	4	7.8	85.0	85.8	85.8
MVI 1606-6/CC	4	7.8	85.0	85.8	85.8
MVI 1607-6/CC	5.5	10.7	85.2	86.9	88.1
MVI 1608-6/CC	5.5	10.7	85.2	86.9	88.1
MVI 1609-6/CC	7.5	14	88.5	89.9	89.5
MVI 1610-6/CC	7.5	14	88.5	89.9	89.5
MVI 1611-6/CC	7.5	14	88.5	89.9	89.5

Motor efficiency based on 400 V, 50 Hz

Technical data Wilo-Comfort CO-/COR-MVI.../CC

Dimension drawing

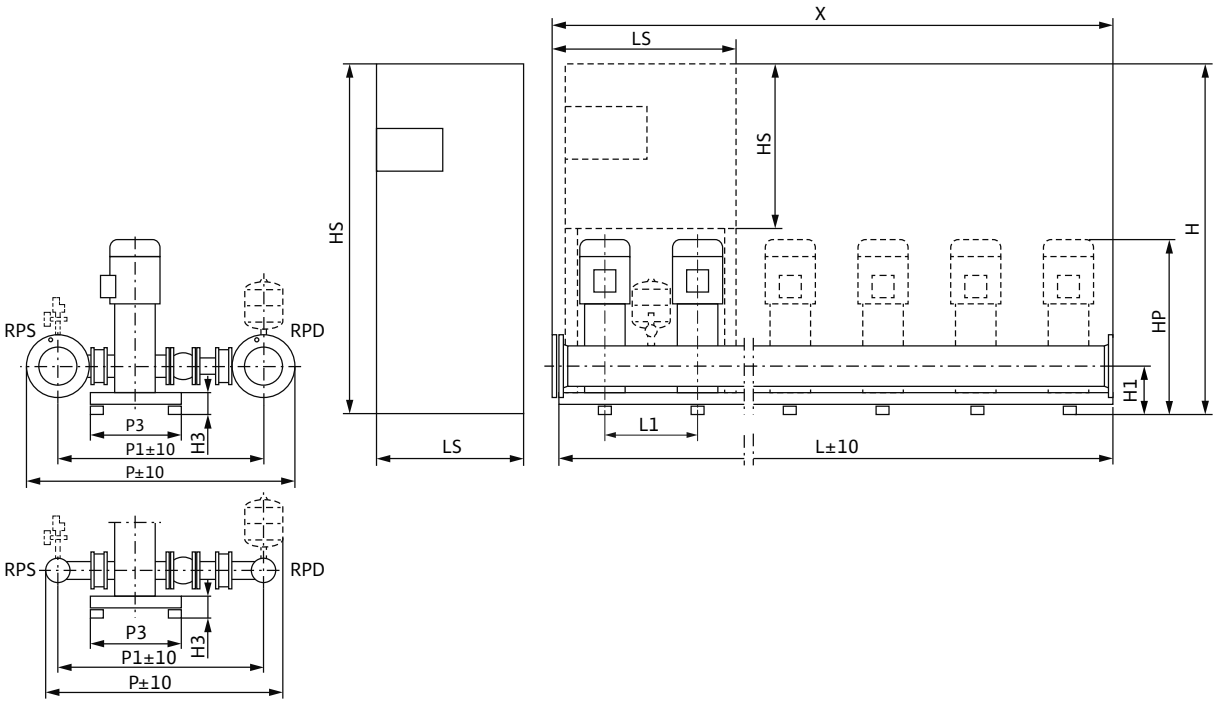

Sample systems are shown. Switchbox position depends on pump height.
Accessories (to be ordered separately): Optional WMS low-water cut-out switchgear kit
Installation surface: flat and horizontal
Installation location: dry, well ventilated and frost-proof

Dimensions, weights

Wilo-Comfort CO(R)- 4...	Nominal diameters of the pipe connec-tions on suction side	Nominal diameters of pipe connec-tions on the pres-sure side	Dimensions																Weight approx.	
											CO	COR	CO	COR	CO	COR	CO	COR	CO	COR
	RPS	*RPD*	*H1*	*H3*	*HP*	*L1*	*P*	*P1*	*P3*	*X*	*H*		*HS*		*L*		*LS*		*m*	
			mm																kg	
MVI 1602-6/CC	DN 100	DN 100	185	105	754	300	1045	828	470	1200	1685	1685	600	760	1200	1200	600	600	321	342
MVI 1603-6/CC	DN 100	DN 100	185	105	829	300	1045	828	470	1200	1685	1685	600	760	1200	1200	600	600	337	358
MVI 1604-6/CC	DN 100	DN 100	185	105	879	300	1045	828	470	1200	1885	1885	600	760	1200	1200	600	600	361	382
MVI 1605-6/CC	DN 100	DN 100	185	105	954	300	1045	828	470	1200	1885	1885	600	760	1200	1200	600	600	401	426
MVI 1606-6/CC	DN 100	DN 100	185	105	1034	300	1045	828	470	1200	1885	1885	600	760	1200	1200	600	600	408	433
MVI 1607-6/CC	DN 100	DN 100	185	105	1109	300	1045	828	470	1200	1900	1900	1900	1900	1200	1200	600	800	452	607
MVI 1608-6/CC	DN 100	DN 100	185	105	1109	300	1045	828	470	1200	1900	1900	1900	1900	1200	1200	600	800	454	609
MVI 1609-6/CC	DN 100	DN 100	185	105	1203	500	1045	828	470	2000	1900	1900	1900	1900	2080	2000	600	800	572	732
MVI 1610-6/CC	DN 100	DN 100	185	105	1203	500	1045	828	470	2000	1900	1900	1900	1900	2080	2000	600	800	575	735
MVI 1611-6/CC	DN 100	DN 100	185	105	1278	500	1045	828	470	2000	1900	1900	1900	1900	2080	2000	600	800	583	743

Technical data Wilo-Comfort CO-/COR-MVI.../CC

Pump curves

Wilo-Comfort CO(R)-5 MVI 1602-1611/-6CC

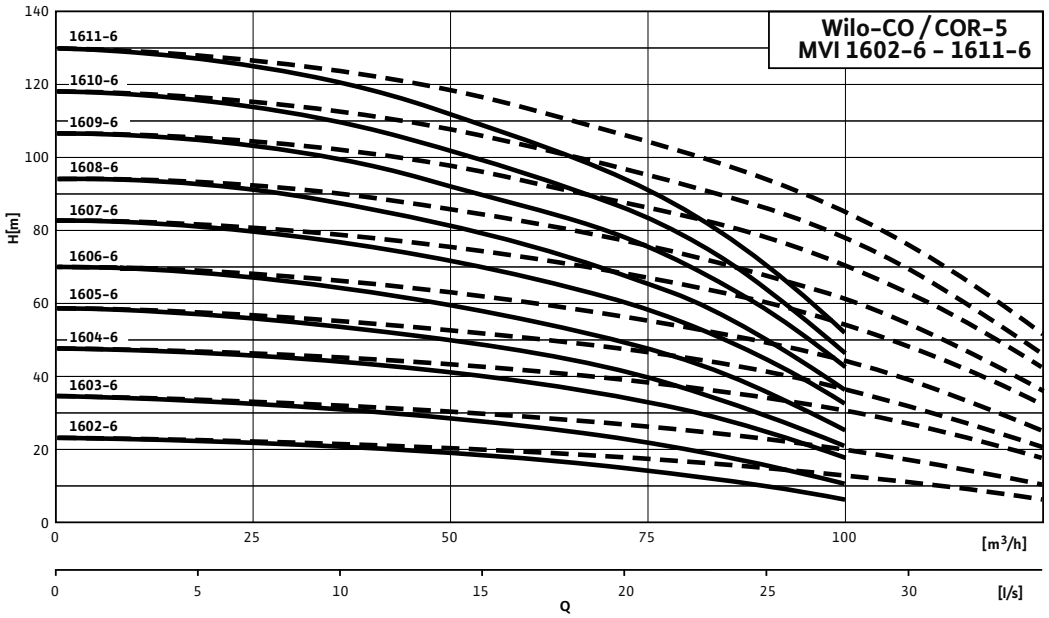

---- including standby pump

Motor data

Wilo-Comfort CO(R)- 5...	Nominal motor power	Nominal current 3~400 V, 50 Hz	Motor efficiency		
	P_2	I_N	$\eta_{m\ 50\%}$	$\eta_{m\ 75\%}$	$\eta_{m\ 100\%}$
	kW	A	%		
MVI 1602-6/CC	1.5	3.3	80.0	81.3	81.3
MVI 1603-6/CC	2.2	4.6	82.0	83.2	83.2
MVI 1604-6/CC	3	6.7	82.5	85.0	84.6
MVI 1605-6/CC	4	7.8	85.0	85.8	85.8
MVI 1606-6/CC	4	7.8	85.0	85.8	85.8
MVI 1607-6/CC	5.5	10.7	85.2	86.9	88.1
MVI 1608-6/CC	5.5	10.7	85.2	86.9	88.1
MVI 1609-6/CC	7.5	14	88.5	89.9	89.5
MVI 1610-6/CC	7.5	14	88.5	89.9	89.5
MVI 1611-6/CC	7.5	14	88.5	89.9	89.5

Motor efficiency based on 400 V, 50 Hz

Technical data Wilo-Comfort CO-/COR-MVI.../CC

Dimension drawing

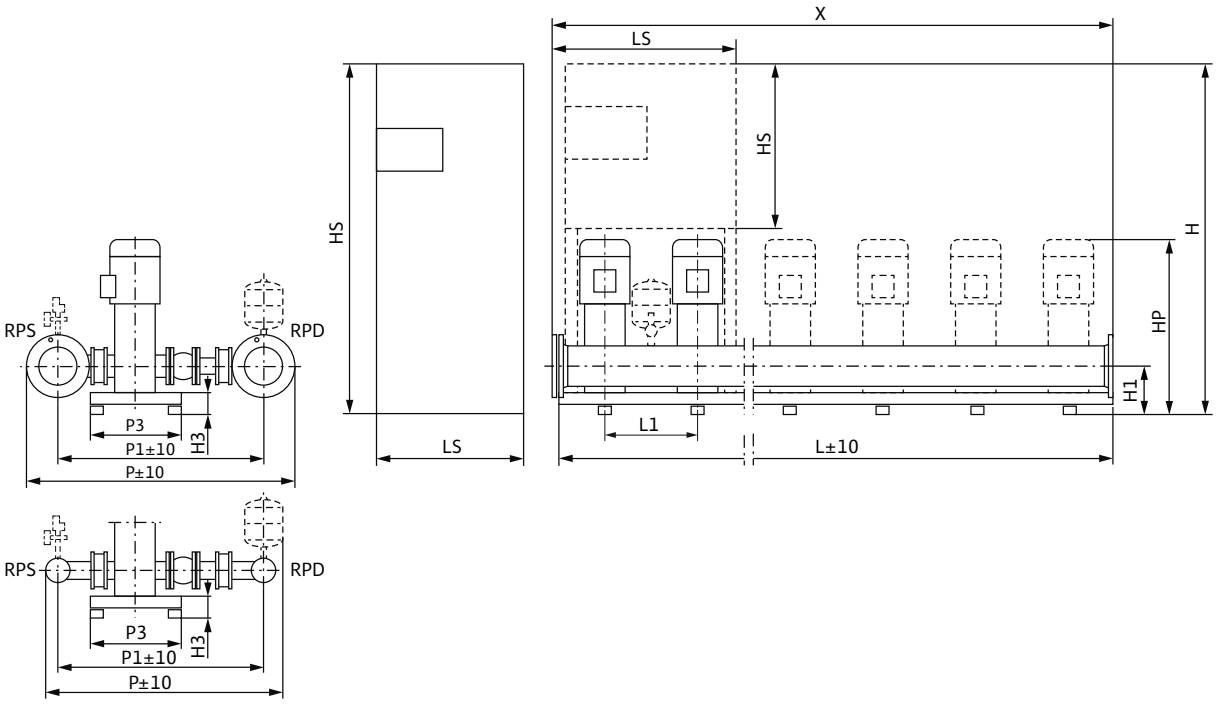

Sample systems are shown. Switchbox position depends on pump height.
Accessories (to be ordered separately): Optional WMS low-water cut-out switchgear kit
Installation surface: flat and horizontal
Installation location: dry, well ventilated and frost-proof

Dimensions, weights

Wilo-Comfort CO(R)- 5...	Nominal diameters of the pipe connec-tions on suction side	Nominal diameters of pipe connec-tions on the pres-sure side	Dimensions																Weight approx.	
											CO	COR	CO	COR	CO	COR	CO	COR	CO	COR
	RPS	*RPD*	*H1*	*H3*	*HP*	*L1*	*P*	*P1*	*P3*	*X*	*H*		*HS*		*L*		*LS*		*m*	
			mm																kg	
MVI 1602-6/CC	DN 100	DN 100	185	105	754	300	1045	828	470	1500	1685	1685	600	760	1500	1500	600	760	394	415
MVI 1603-6/CC	DN 100	DN 100	185	105	829	300	1045	828	470	1500	1685	1685	600	760	1500	1500	600	760	414	435
MVI 1604-6/CC	DN 100	DN 100	185	105	879	300	1045	828	470	1500	1885	1885	600	760	1500	1500	600	760	445	469
MVI 1605-6/CC	DN 100	DN 100	185	105	954	300	1045	828	470	1500	1885	1885	600	760	1500	1500	600	760	497	521
MVI 1606-6/CC	DN 100	DN 100	185	105	1034	300	1045	828	470	1500	1885	1885	600	760	1500	1500	600	760	500	524
MVI 1607-6/CC	DN 100	DN 100	185	105	1109	300	1045	828	470	1500	1900	1900	1900	1900	1500	1500	800	1000	572	731
MVI 1608-6/CC	DN 100	DN 100	185	105	1109	300	1045	828	470	1500	1900	1900	1900	1900	1500	1500	800	1000	575	734
MVI 1609-6/CC	DN 100	DN 100	185	105	1203	500	1045	828	470	2500	1900	1900	1900	1900	2500	2500	800	1000	721	883
MVI 1610-6/CC	DN 100	DN 100	185	105	1203	500	1045	828	470	2500	1900	1900	1900	1900	2500	2500	800	1000	723	885
MVI 1611-6/CC	DN 100	DN 100	185	105	1278	500	1045	828	470	2500	1900	1900	1900	1900	2500	2500	800	1000	733	895

Technical data Wilo-Comfort CO-/COR-MVI.../CC

Pump curves

Wilo-Comfort CO(R)-6 MVI 1602-1611-6/CC

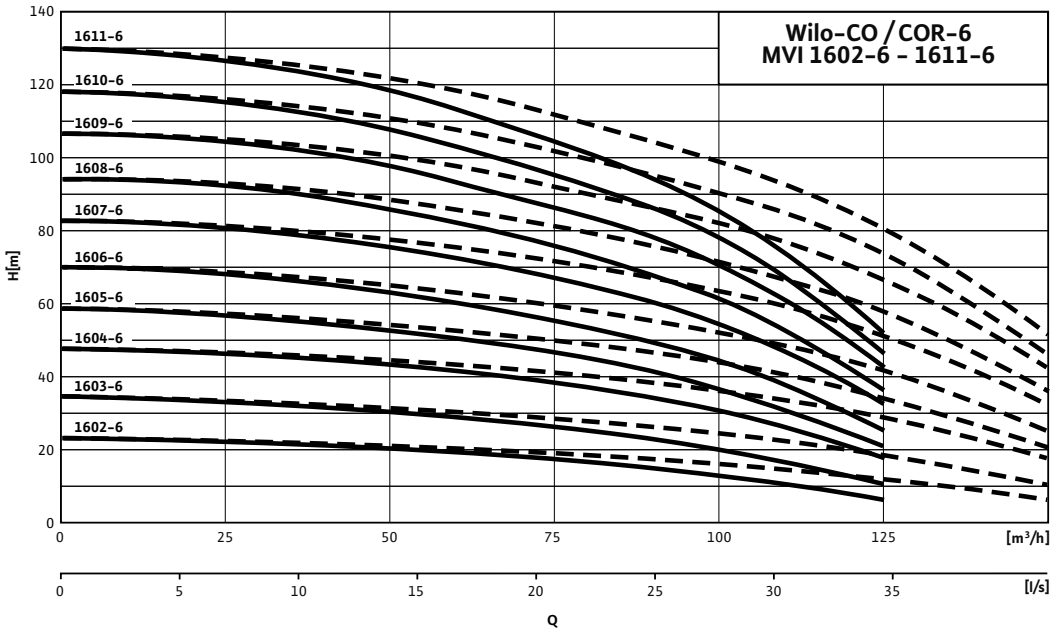

---- including standby pump

Motor data

Wilo-Comfort CO(R)- 6...	Nominal motor power	Nominal current 3~400 V, 50 Hz	Motor efficiency		
	P_2	I_N	$\eta_{m\ 50\%}$	$\eta_{m\ 75\%}$	$\eta_{m\ 100\%}$
	kW	A	%		
MVI 1602-6/CC	1.5	3.3	80.0	81.3	81.3
MVI 1603-6/CC	2.2	4.6	82.0	83.2	83.2
MVI 1604-6/CC	3	6.7	82.5	85.0	84.6
MVI 1605-6/CC	4	7.8	85.0	85.8	85.8
MVI 1606-6/CC	4	7.8	85.0	85.8	85.8
MVI 1607-6/CC	5.5	10.7	85.2	86.9	88.1
MVI 1608-6/CC	5.5	10.7	85.2	86.9	88.1
MVI 1609-6/CC	7.5	14	88.5	89.9	89.5
MVI 1610-6/CC	7.5	14	88.5	89.9	89.5
MVI 1611-6/CC	7.5	14	88.5	89.9	89.5

Motor efficiency based on 400 V, 50 Hz

Technical data Wilo-Comfort CO-/COR-MVI.../CC

Dimension drawing

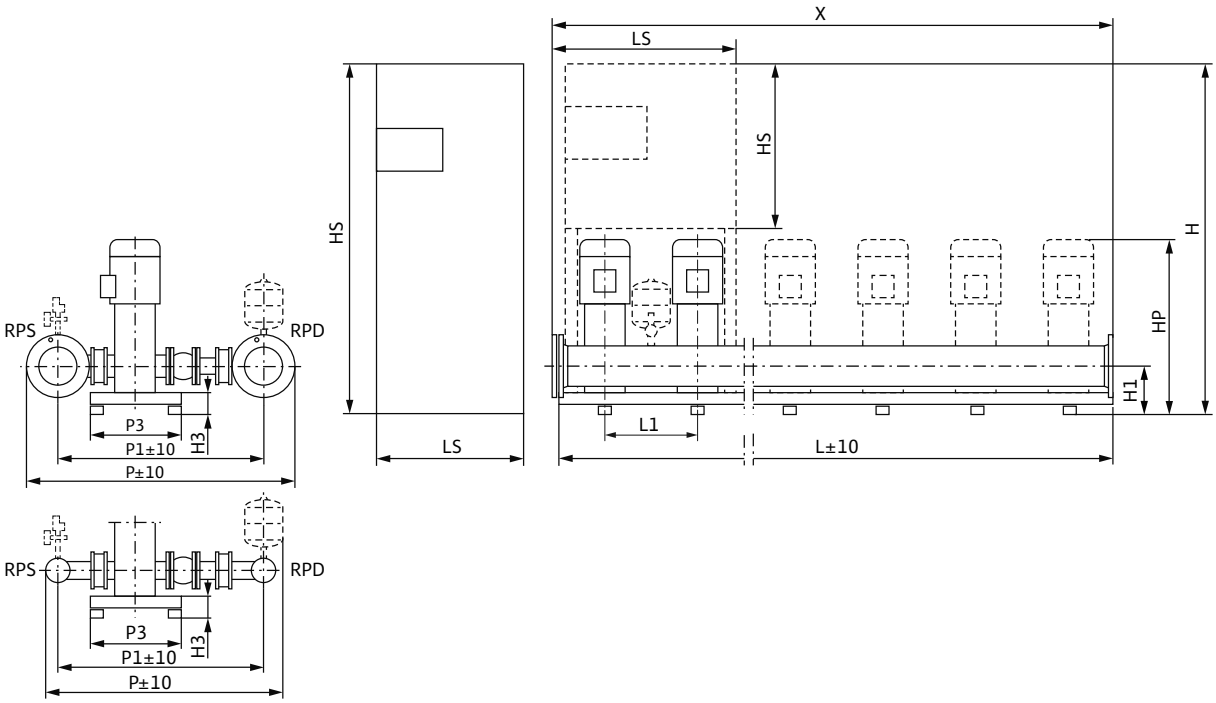

Sample systems are shown. Switchbox position depends on pump height.
Accessories (to be ordered separately): Optional WMS low-water cut-out switchgear kit
Installation surface: flat and horizontal
Installation location: dry, well ventilated and frost-proof

Dimensions, weights

Wilo-Comfort CO(R)- 6...	Nominal diameters of the pipe connections on suction side	Nominal diameters of pipe connections on the pressure side	Dimensions																Weight approx.	
											CO	COR	CO	COR	CO	COR	CO	COR	CO	COR
	RPS	*RPD*	*H1*	*H3*	*HP*	*L1*	*P*	*P1*	*P3*	*X*	*H*		*HS*		*L*		*LS*		*m*	
			mm																kg	
MVI 1602-6/CC	DN 100	DN 100	185	105	754	300	1045	828	470	1800	1685	1685	600	760	1800	1800	600	760	467	488
MVI 1603-6/CC	DN 100	DN 100	185	105	829	300	1045	828	470	1800	1685	1685	600	760	1800	1800	600	760	491	512
MVI 1604-6/CC	DN 100	DN 100	185	105	879	300	1045	828	470	1800	1885	1885	600	760	1800	1800	600	760	528	552
MVI 1605-6/CC	DN 100	DN 100	185	105	954	300	1045	828	470	1800	1885	1885	600	760	1800	1800	600	760	589	613
MVI 1606-6/CC	DN 100	DN 100	185	105	1034	300	1045	828	470	1800	1885	1885	600	760	1800	1800	600	760	594	618
MVI 1607-6/CC	DN 100	DN 100	185	105	1109	300	1045	828	470	1800	1900	1900	1900	1900	1800	1800	800	1000	668	827
MVI 1608-6/CC	DN 100	DN 100	185	105	1109	300	1045	828	470	1800	1900	1900	1900	1900	1800	1800	800	1000	670	830
MVI 1609-6/CC	DN 100	DN 100	185	105	1203	500	1045	828	470	3000	1900	1900	1900	1900	3000	3000	800	1000	740	902
MVI 1610-6/CC	DN 100	DN 100	185	105	1203	500	1045	828	470	3000	1900	1900	1900	1900	3000	3000	800	1000	842	1004
MVI 1611-6/CC	DN 100	DN 100	185	105	1278	500	1045	828	470	3000	1900	1900	1900	1900	3000	3000	800	1000	855	1017

Technical data Wilo-Comfort CO-/COR-MVI.../CC

Pump curves

Wilo-Comfort CO(R)-2 MVI 3202-3208/CC

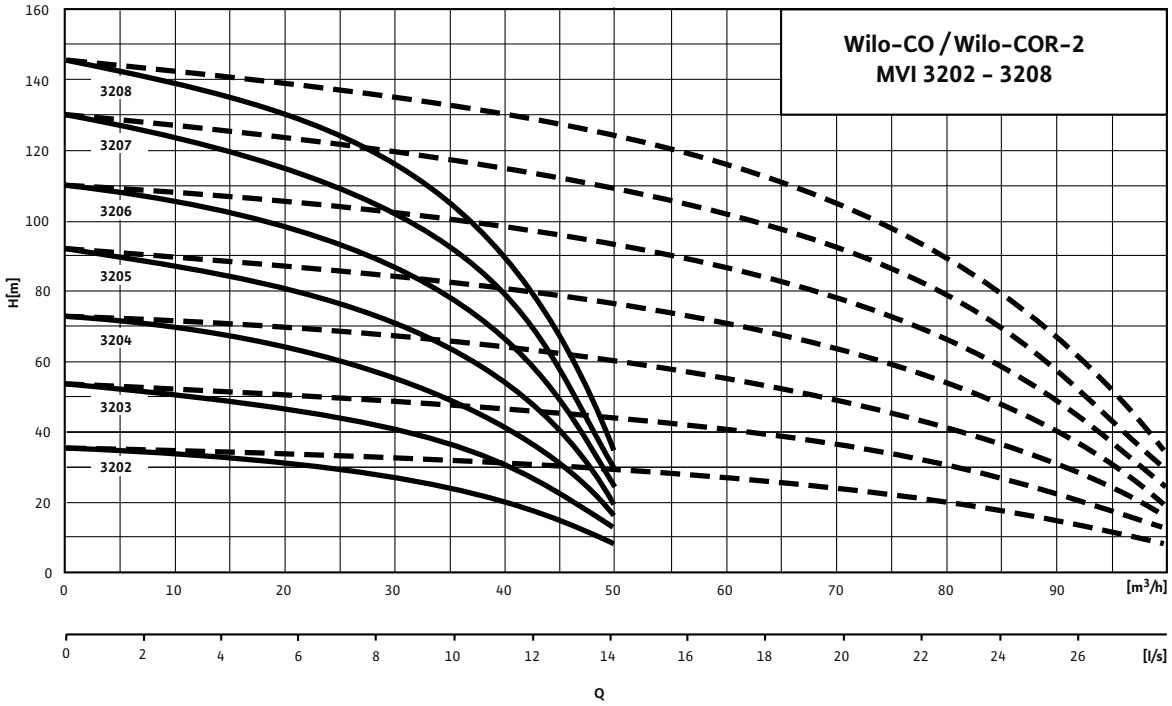

---- including standby pump

Motor data

Wilo-Comfort CO(R)- 2...	Nominal motor power	Nominal current 3~400 V, 50 Hz	Motor efficiency		
	P_2	I_N	$\eta_{m\ 50\%}$	$\eta_{m\ 75\%}$	$\eta_{m\ 100\%}$
	kW	A	%		
MVI 3202/CC	4	7.8	85.0	85.8	85.8
MVI 3203/CC	5.5	10.7	85.2	86.9	88.1
MVI 3204/CC	7.5	14	88.5	89.9	89.5
MVI 3205/CC	9	16.3	86.6	88.4	88.8
MVI 3206/CC	11	20.2	87.5	89.3	89.4
MVI 3207/CC	15	25.7	88.4	90.2	90.3
MVI 3208/CC	15	25.7	88.4	90.2	90.3

Motor efficiency based on 400 V, 50 Hz

Technical data Wilo-Comfort CO-/COR-MVI.../CC

Dimension drawing

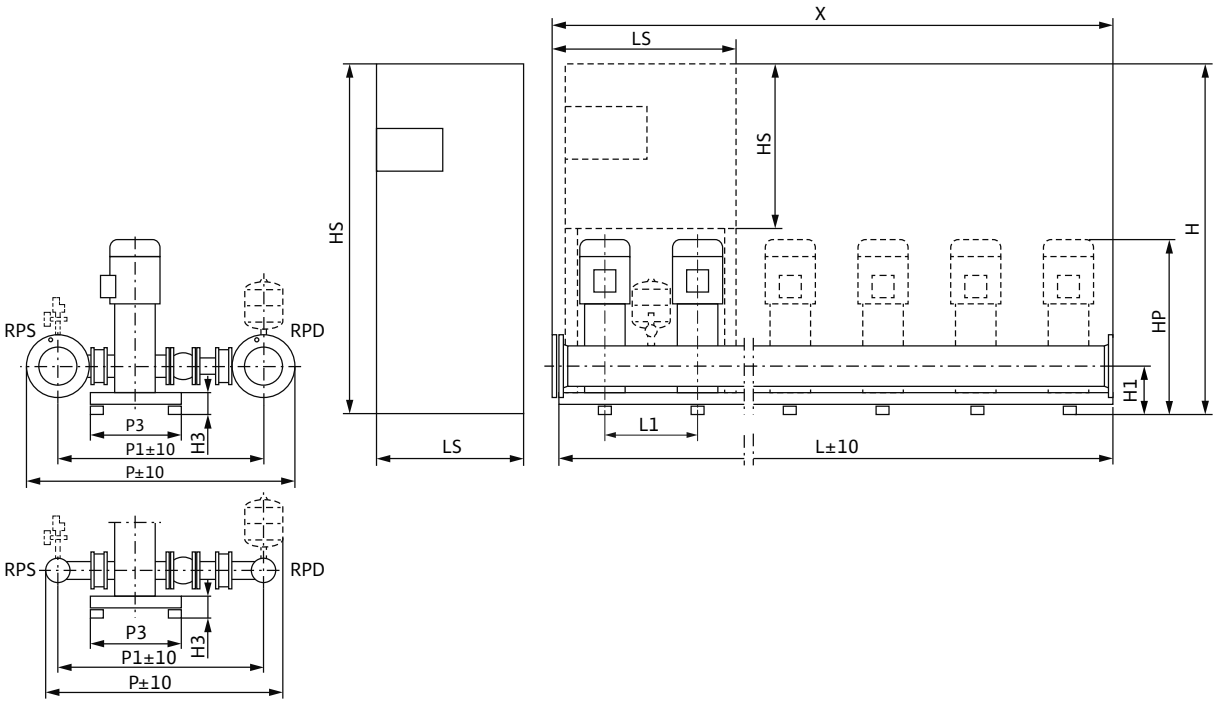

Sample systems are shown. Switchbox position depends on pump height.
Accessories (to be ordered separately): Optional WMS low-water cut-out switchgear kit
Installation surface: flat and horizontal
Installation location: dry, well ventilated and frost-proof

Dimensions, weights

Wilo-Comfort CO(R)- 2...	Nominal diameters of the pipe connections on suction side	Nominal diameters of pipe connections on the pressure side	Dimensions																Weight approx.	
											CO	COR	CO	COR	CO	COR	CO	COR	CO	COR
	RPS	*RPD*	*H1*	*H3*	*HP*	*L1*	*P*	*P1*	*P3*	*X*	*H*		*HS*		*L*		*LS*		*m*	
			mm																kg	
MVI 3202/CC	DN 150	DN 150	230	125	970	500	1335	1050	500	1000	1905	1905	600	760	1000	1000	600	600	413	587
MVI 3203/CC	DN 150	DN 150	230	125	1015	500	1335	1050	500	1000	1905	1900	760	1900	1000	1000	600	600	437	614
MVI 3204/CC	DN 150	DN 150	230	125	1127	500	1335	1050	500	1000	1905	1900	760	1900	1000	1000	600	600	495	700
MVI 3205/CC	DN 150	DN 150	230	125	1220	500	1335	1050	500	1000	1905	1900	760	1900	1000	1000	600	800	527	741
MVI 3206/CC	DN 150	DN 150	230	125	1220	500	1335	1050	500	1000	1905	1900	760	1900	1000	1000	600	800	559	773
MVI 3207/CC	DN 150	DN 150	230	125	1497	500	1335	1050	500	1000	1905	1900	760	1900	1000	1000	600	800	591	835
MVI 3208/CC	DN 150	DN 150	230	125	1503	500	1335	1050	500	1000	1905	1900	760	1900	1000	1000	600	800	625	936

Technical data Wilo-Comfort CO-/COR-MVI.../CC

Pump curves

Wilo-Comfort CO(R)-3 MVI 3202-3208/CC

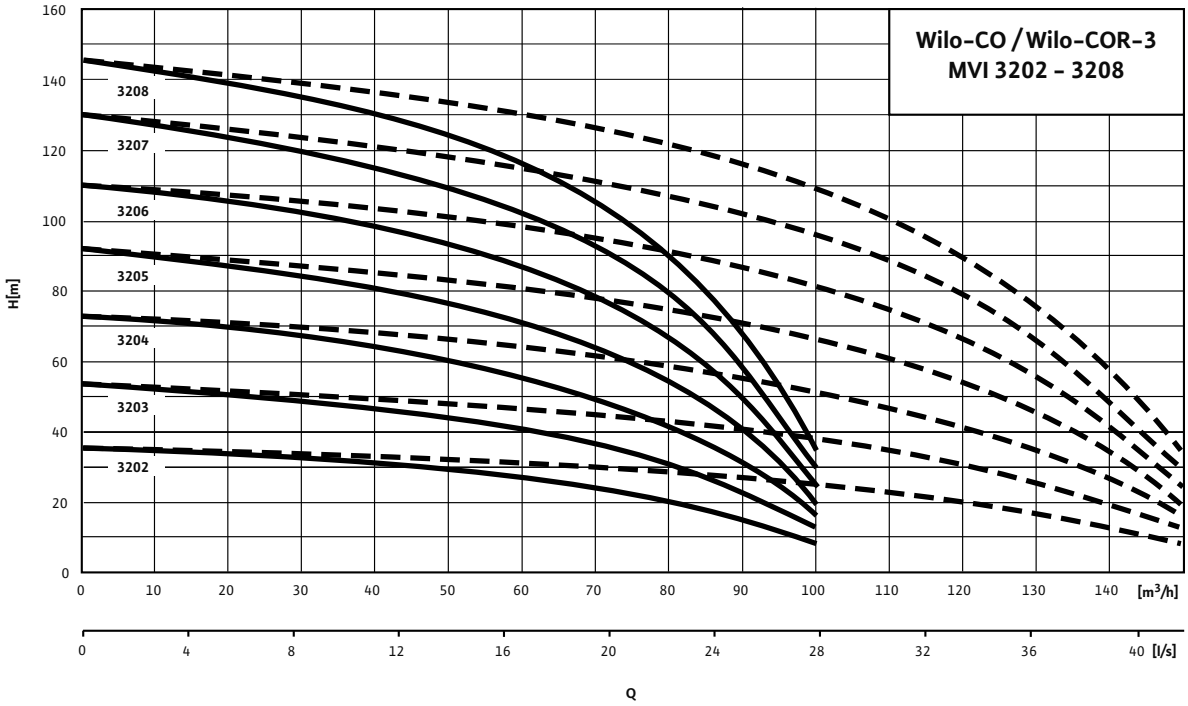

---- including standby pump

Motor data

Wilo-Comfort CO(R)- 3...	Nominal motor power	Nominal current 3~400 V, 50 Hz	Motor efficiency		
	P_2	I_N	$\eta_{m\ 50\%}$	$\eta_{m\ 75\%}$	$\eta_{m\ 100\%}$
	kW	A	%		
MVI 3202/CC	4	7.8	85.0	85.8	85.8
MVI 3203/CC	5.5	10.7	85.2	86.9	88.1
MVI 3204/CC	7.5	14	88.5	89.9	89.5
MVI 3205/CC	9	16.3	86.6	88.4	88.8
MVI 3206/CC	11	20.2	87.5	89.3	89.4
MVI 3207/CC	15	25.7	88.4	90.2	90.3
MVI 3208/CC	15	25.7	88.4	90.2	90.3

Motor efficiency based on 400 V, 50 Hz

Technical data Wilo-Comfort CO-/COR-MVI.../CC

Dimension drawing

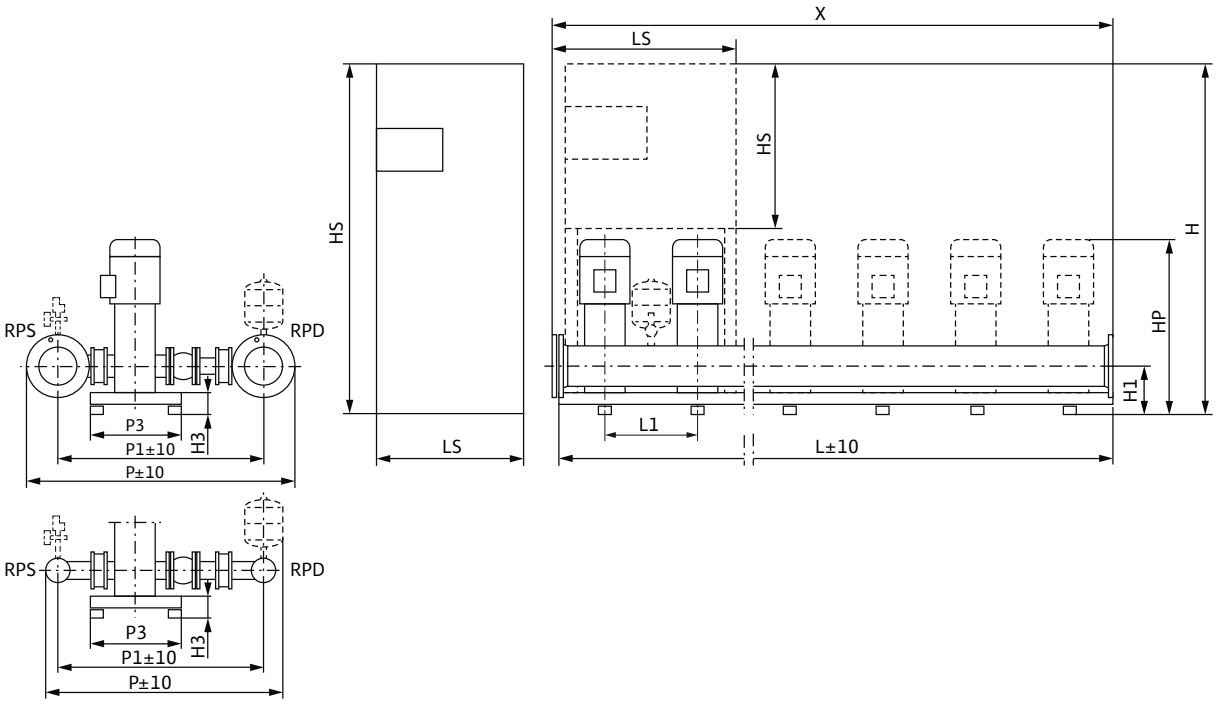

Sample systems are shown. Switchbox position depends on pump height.
Accessories (to be ordered separately): Optional WMS low-water cut-out switchgear kit
Installation surface: flat and horizontal
Installation location: dry, well ventilated and frost-proof

Dimensions, weights

Wilo-Comfort CO(R)- 3...	Nominal diameters of the pipe connections on suction side	Nominal diameters of pipe connections on the pressure side	Dimensions																Weight approx.	
											CO	COR	CO	COR	CO	COR	CO	COR	CO	COR
	RPS	*RPD*	*H1*	*H3*	*HP*	*L1*	*P*	*P1*	*P3*	*X*	*H*		*HS*		*L*		*LS*		*m*	
			mm																kg	
MVI 3202/CC	DN 150	DN 150	230	125	970	500	1335	1050	500	1500	1905	1905	600	760	1500	1500	600	600	596	634
MVI 3203/CC	DN 150	DN 150	230	125	1015	500	1335	1050	500	1500	1905	1900	760	1900	1500	1500	600	800	632	798
MVI 3204/CC	DN 150	DN 150	230	125	1127	500	1335	1050	500	1500	1905	1900	760	1900	1500	1500	600	800	718	913
MVI 3205/CC	DN 150	DN 150	230	125	1220	500	1335	1050	500	1500	1905	1900	1900	1900	1500	1500	600	1000	938	969
MVI 3206/CC	DN 150	DN 150	230	125	1220	500	1335	1050	500	1500	1900	1900	1900	1900	1500	1500	600	1000	985	1017
MVI 3207/CC	DN 150	DN 150	230	125	1497	500	1335	1050	500	1500	1900	1900	1900	1900	1500	1500	600	1000	1039	1067
MVI 3208/CC	DN 150	DN 150	230	125	1503	500	1335	1050	500	1500	1900	1905	1900	1900	1500	1500	600	1000	1089	1119

Technical data Wilo-Comfort CO-/COR-MVI.../CC

Pump curves

Wilo-Comfort CO(R)-4 MVI 3202-3208/CC

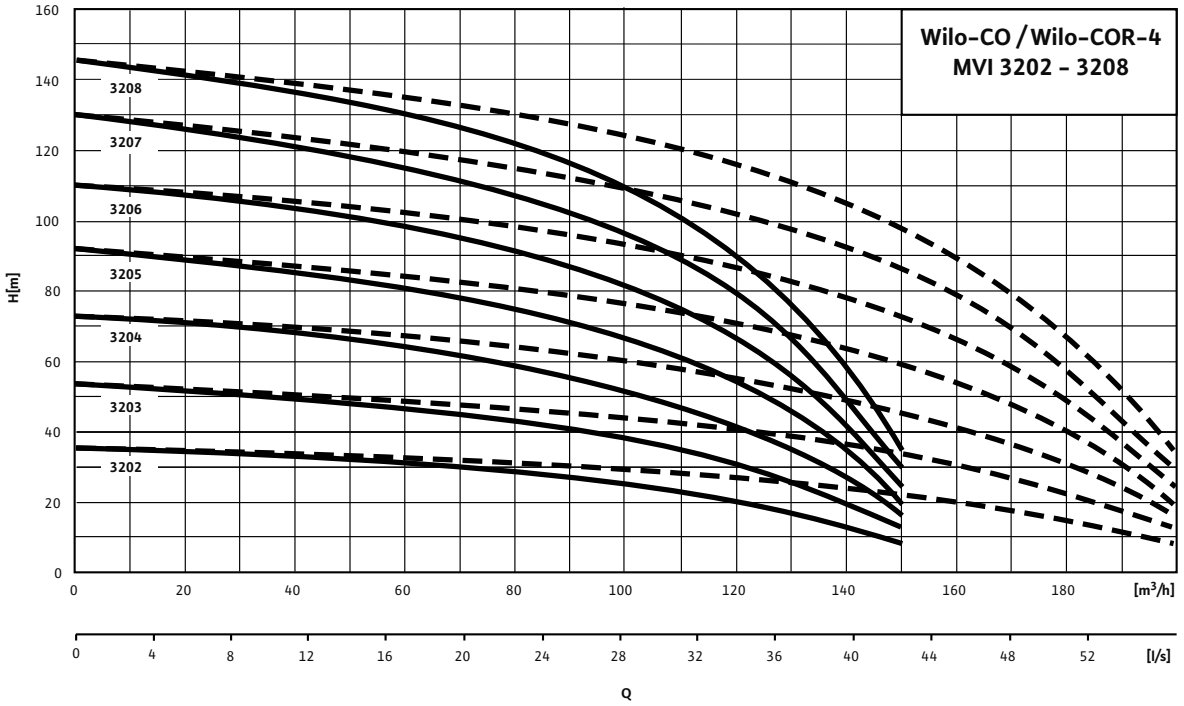

---- including standby pump

Motor data

Wilo-Comfort CO(R)- 4...	Nominal motor power	Nominal current 3~400 V, 50 Hz	Motor efficiency		
	P_2	I_N	$\eta_{m\ 50\%}$	$\eta_{m\ 75\%}$	$\eta_{m\ 100\%}$
	kW	A	%		
MVI 3202/CC	4	7.8	85.0	85.8	85.8
MVI 3203/CC	5.5	10.7	85.2	86.9	88.1
MVI 3204/CC	7.5	14	88.5	89.9	89.5
MVI 3205/CC	9	16.3	86.6	88.4	88.8
MVI 3206/CC	11	20.2	87.5	89.3	89.4
MVI 3207/CC	15	25.7	88.4	90.2	90.3
MVI 3208/CC	15	25.7	88.4	90.2	90.3

Motor efficiency based on 400 V, 50 Hz

Technical data Wilo-Comfort CO-/COR-MVI.../CC

Dimension drawing

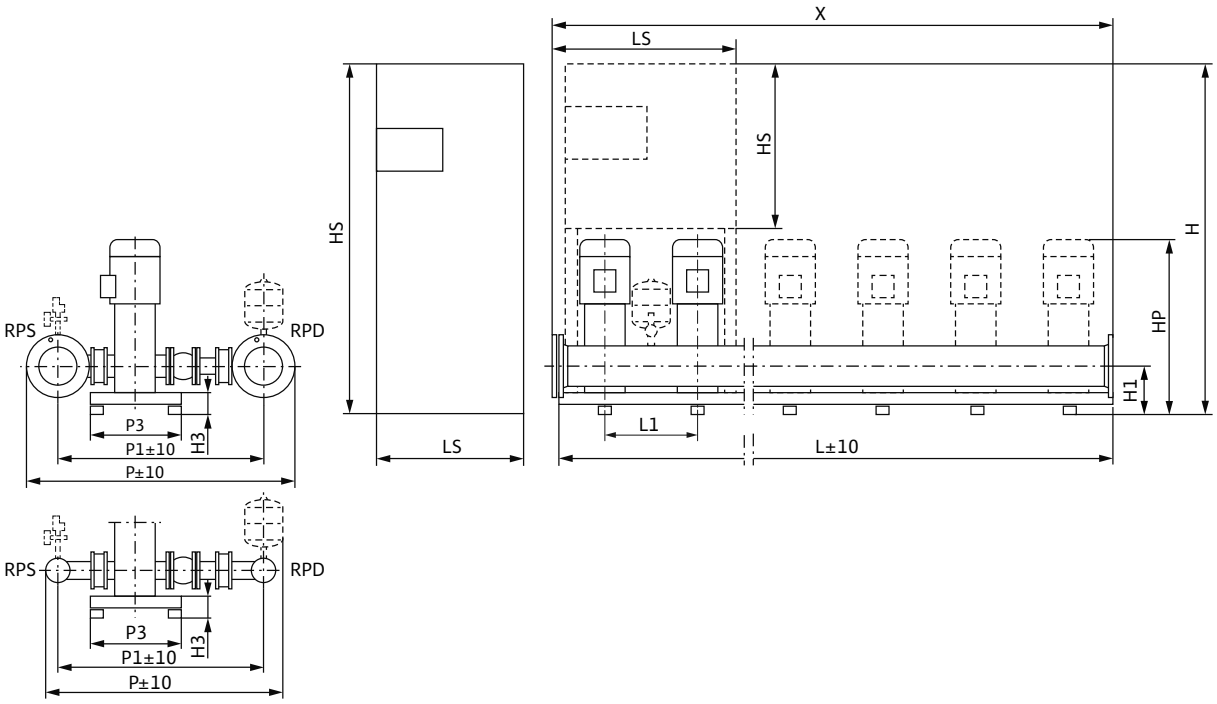

Sample systems are shown. Switchbox position depends on pump height.
Accessories (to be ordered separately): Optional WMS low-water cut-out switchgear kit
Installation surface: flat and horizontal
Installation location: dry, well ventilated and frost-proof

Dimensions, weights

Wilo-Comfort CO(R)- 4...	Nominal diameters of the pipe connections on suction side	Nominal diameters of pipe connections on the pressure side	Dimensions																Weight approx.	
											CO	COR	CO	COR	CO	COR	CO	COR	CO	COR
	RPS	*RPD*	*H1*	*H3*	*HP*	*L1*	*P*	*P1*	*P3*	*X*	*H*		*HS*		*L*		*LS*		*m*	
			mm																kg	
MVI 3202/CC	DN 150	DN 150	230	125	970	500	1335	1050	500	2000	1905	1900	600	760	2000	2000	600	600	852	953
MVI 3203/CC	DN 150	DN 150	230	125	1015	500	1335	1050	500	2000	1900	1900	1900	1900	2000	2000	600	800	968	1004
MVI 3204/CC	DN 150	DN 150	230	125	1127	500	1335	1050	500	2000	1900	1900	1900	1900	2000	2000	600	800	986	1148
MVI 3205/CC	DN 150	DN 150	230	125	1220	500	1335	1050	500	2000	1900	1900	1900	1900	2000	2000	600	1000	1014	1224
MVI 3206/CC	DN 150	DN 150	230	125	1220	500	1335	1050	500	2000	1900	1900	1900	1900	2000	2000	600	1000	1078	1288
MVI 3207/CC	DN 150	DN 150	230	125	1497	500	1335	1050	500	2000	1900	1900	1900	1900	2000	2000	600	1000	1139	1328
MVI 3208/CC	DN 150	DN 150	230	125	1503	500	1335	1050	500	2000	1900	1900	1900	1900	2000	2000	600	1000	1200	1394

Technical data Wilo-Comfort CO-/COR-MVI.../CC

Pump curves

Wilo-Comfort CO(R)-5 MVI 3202-3208/CC

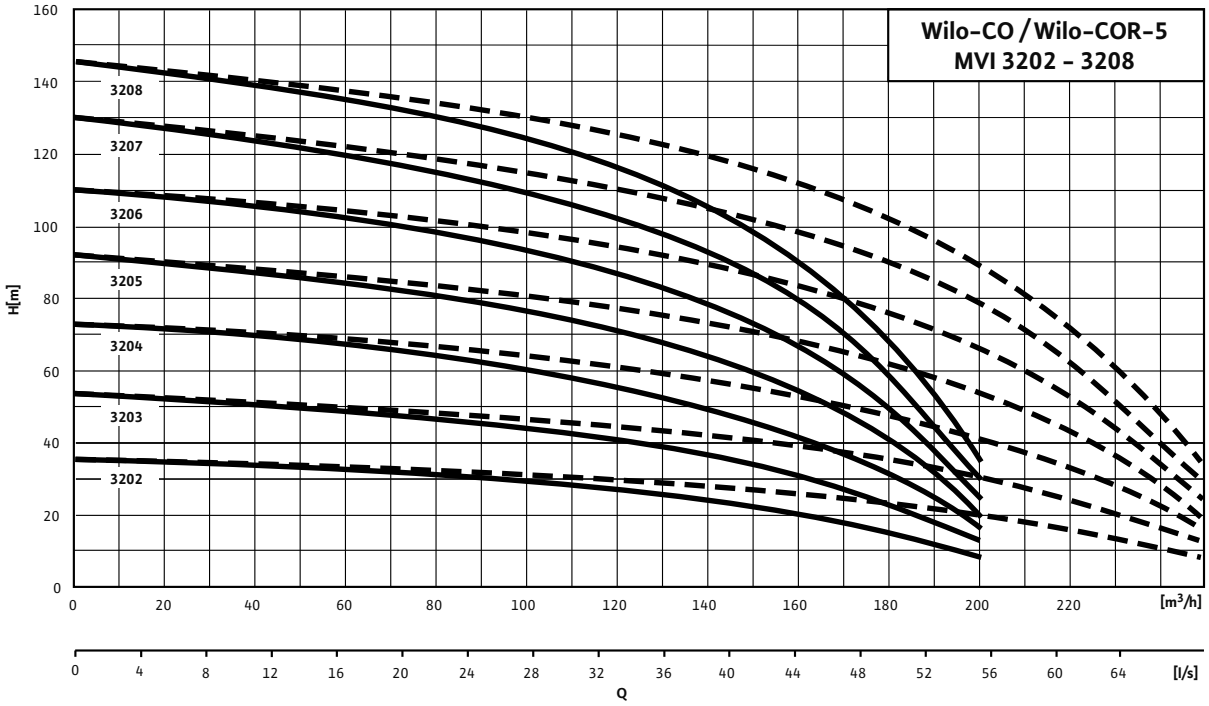

---- including standby pump

Motor data

Wilo-Comfort CO(R)- 5...	Nominal motor power	Nominal current 3~400 V, 50 Hz	Motor efficiency		
	P_2	I_N	$\eta_{m\ 50\%}$	$\eta_{m\ 75\%}$	$\eta_{m\ 100\%}$
	kW	A	%		
MVI 3202/CC	4	7.8	85.0	85.8	85.8
MVI 3203/CC	5.5	10.7	85.2	86.9	88.1
MVI 3204/CC	7.5	14	88.5	89.9	89.5
MVI 3205/CC	9	16.3	86.6	88.4	88.8
MVI 3206/CC	11	20.2	87.5	89.3	89.4
MVI 3207/CC	15	25.7	88.4	90.2	90.3
MVI 3208/CC	15	25.7	88.4	90.2	90.3

Motor efficiency based on 400 V, 50 Hz

Technical data Wilo-Comfort CO-/COR-MVI.../CC

Dimension drawing

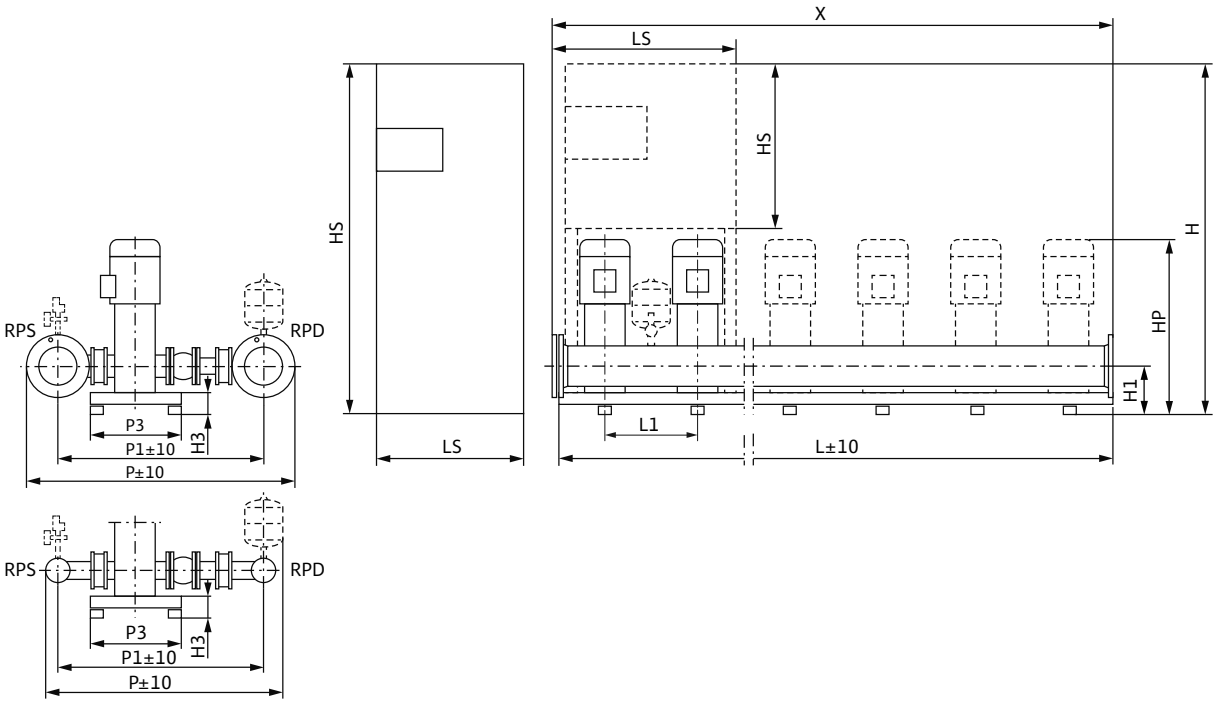

Sample systems are shown. Switchbox position depends on pump height.
Accessories (to be ordered separately): Optional WMS low-water cut-out switchgear kit
Installation surface: flat and horizontal
Installation location: dry, well ventilated and frost-proof

Dimensions, weights

Wilo-Comfort CO(R)- 5...	Nominal diameters of the pipe connections on suction side	Nominal diameters of pipe connections on the pressure side	Dimensions																Weight approx.	
											CO	COR	CO	COR	CO	COR	CO	COR	CO	COR
	RPS	*RPD*	*H1*	*H3*	*HP*	*L1*	*P*	*P1*	*P3*	*X*	*H*		*HS*		*L*		*LS*		*m*	
			mm																kg	
MVI 3202/CC	DN 150	DN 150	230	125	970	500	1335	1050	500	2500	1905	1905	600	760	2500	2500	600	760	1066	1109
MVI 3203/CC	DN 150	DN 150	230	125	1015	500	1335	1050	500	2500	1900	1900	1900	1900	2500	2500	800	1000	1146	1202
MVI 3204/CC	DN 150	DN 150	230	125	1127	500	1335	1050	500	2500	1900	1900	1900	1900	2500	2500	800	1000	1158	1374
MVI 3205/CC	DN 150	DN 150	230	125	1220	500	1335	1050	500	2500	1900	1900	1900	1900	2500	2500	800	1000	1345	1520
MVI 3206/CC	DN 150	DN 150	230	125	1220	500	1335	1050	500	2500	1900	1900	1900	1900	2500	2500	800	1000	1425	1600
MVI 3207/CC	DN 150	DN 150	230	125	1497	500	1335	1050	500	2500	1900	1900	1900	1900	2500	2500	800	1200	1505	1700
MVI 3208/CC	DN 150	DN 150	230	125	1503	500	1335	1050	500	2500	1900	1900	1900	1900	2500	2500	800	1200	1590	1805

Technical data Wilo-Comfort CO-/COR-MVI.../CC

Pump curves

Wilo-Comfort CO(R)-6 MVI 3202-3208/CC

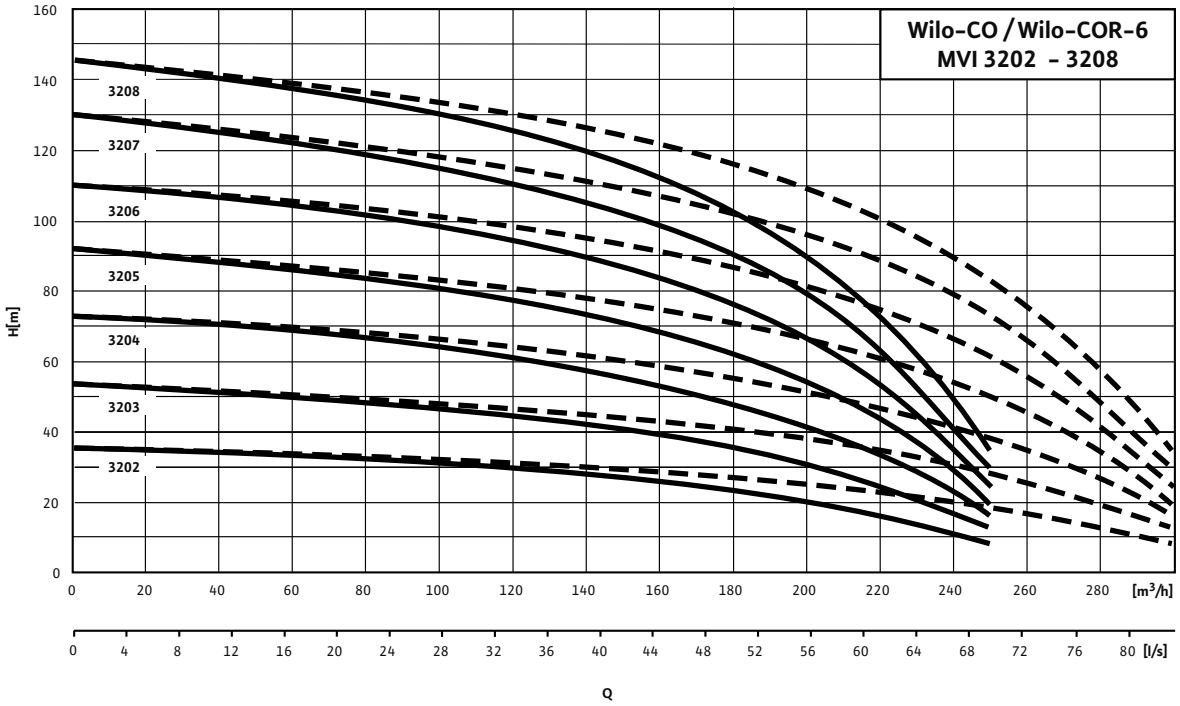

---- including standby pump

Motor data					
Wilo-Comfort CO(R)- 6...	**Nominal motor power**	**Nominal current 3~400 V, 50 Hz**	**Motor efficiency**		
	P_2	I_N	$\eta_{m\ 50\%}$	$\eta_{m\ 75\%}$	$\eta_{m\ 100\%}$
	kW	A	%		
MVI 3202/CC	4	7.8	85.0	85.8	85.8
MVI 3203/CC	5.5	10.7	85.2	86.9	88.1
MVI 3204/CC	7.5	14	88.5	89.9	89.5
MVI 3205/CC	9	16.3	86.6	88.4	88.8
MVI 3206/CC	11	20.2	87.5	89.3	89.4
MVI 3207/CC	15	25.7	88.4	90.2	90.3
MVI 3208/CC	15	25.7	88.4	90.2	90.3

Motor efficiency based on 400 V, 50 Hz

Technical data Wilo-Comfort CO-/COR-MVI.../CC

Dimension drawing

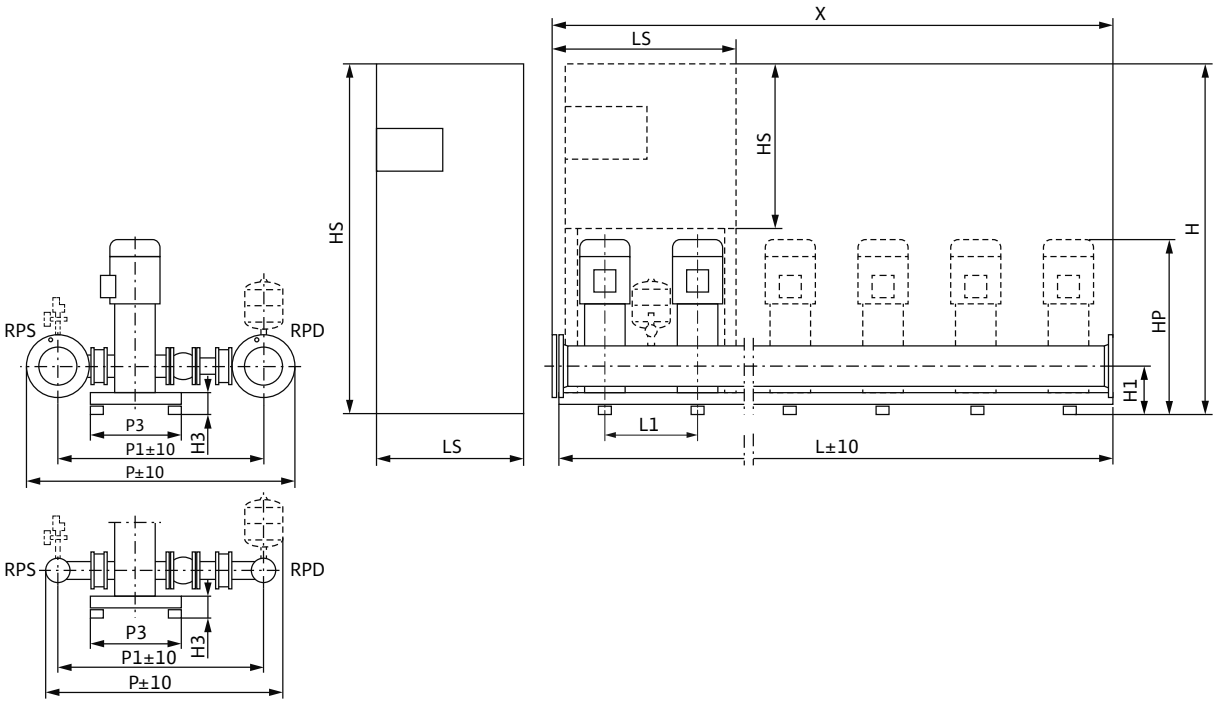

Sample systems are shown. Switchbox position depends on pump height.
Accessories (to be ordered separately): Optional WMS low-water cut-out switchgear kit
Installation surface: flat and horizontal
Installation location: dry, well ventilated and frost-proof

Dimensions, weights

Wilo-Comfort CO(R)- 6...	Nominal diameters of the pipe connections on suction side	Nominal diameters of pipe connections on the pressure side	Dimensions																Weight approx.	
											CO	COR	CO	COR	CO	COR	CO	COR	CO	COR
	RPS	*RPD*	*H1*	*H3*	*HP*	*L1*	*P*	*P1*	*P3*	*X*	*H*		*HS*		*L*		*LS*		*m*	
			mm																kg	
MVI 3202/CC	DN 150	DN 150	230	125	970	500	1335	1050	500	3000	1905	1905	600	760	3000	3000	600	760	1226	1302
MVI 3203/CC	DN 150	DN 150	230	125	1015	500	1335	1050	500	3000	1900	1900	1900	1900	3000	3000	800	1000	1318	1419
MVI 3204/CC	DN 150	DN 150	230	125	1127	500	1335	1050	500	3000	1900	1900	1900	1900	3000	3000	800	1000	1488	1655
MVI 3205/CC	DN 150	DN 150	230	125	1220	500	1335	1050	500	3000	1900	1900	1900	1900	3000	3000	800	1000	1580	1755
MVI 3206/CC	DN 150	DN 150	230	125	1220	500	1335	1050	500	3000	1900	1900	1900	1900	3000	3000	800	1000	1676	1851
MVI 3207/CC	DN 150	DN 150	230	125	1497	500	1335	1050	500	3000	1900	1900	1900	1900	3000	3000	800	1200	1766	1952
MVI 3208/CC	DN 150	DN 150	230	125	1503	500	1335	1050	500	3000	1900	1900	1900	1900	3000	3000	800	1200	1868	2005

Technical data Wilo-Comfort CO-/COR-MVI.../CC

Pump curves

Wilo-Comfort CO(R)-2 MVI 5202-5207/CC

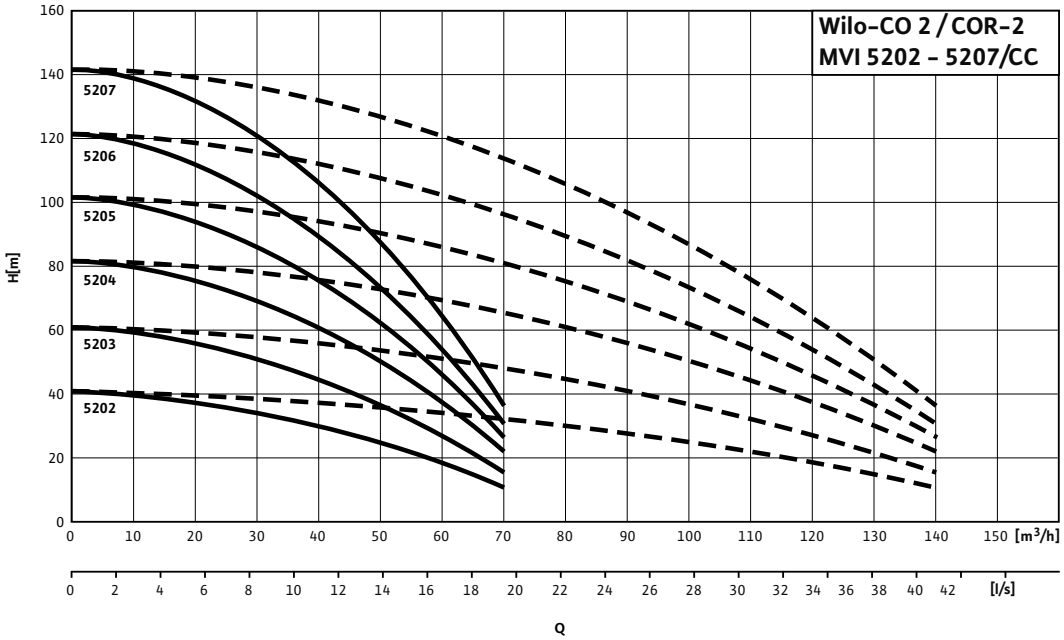

---- including standby pump

Motor data

Wilo-Comfort CO(R)- 2...	Nominal motor power	Nominal current 3~400 V, 50 Hz	Motor efficiency		
	P_2	I_N	$\eta_{m\ 50\%}$	$\eta_{m\ 75\%}$	$\eta_{m\ 100\%}$
	kW	A	%		
MVI 5202/CC	5.5	10.7	85.2	86.9	88.1
MVI 5203/CC	7.5	14	88.5	89.9	89.5
MVI 5204/CC	11	20.2	87.5	89.3	89.4
MVI 5205/CC	15	25.7	88.4	90.2	90.3
MVI 5206/CC	15	25.7	88.4	90.2	90.3
MVI 5207/CC	18.5	31.4	89.0	90.8	90.9

Motor efficiency based on 400 V, 50 Hz

Technical data Wilo-Comfort CO-/COR-MVI.../CC

Dimension drawing

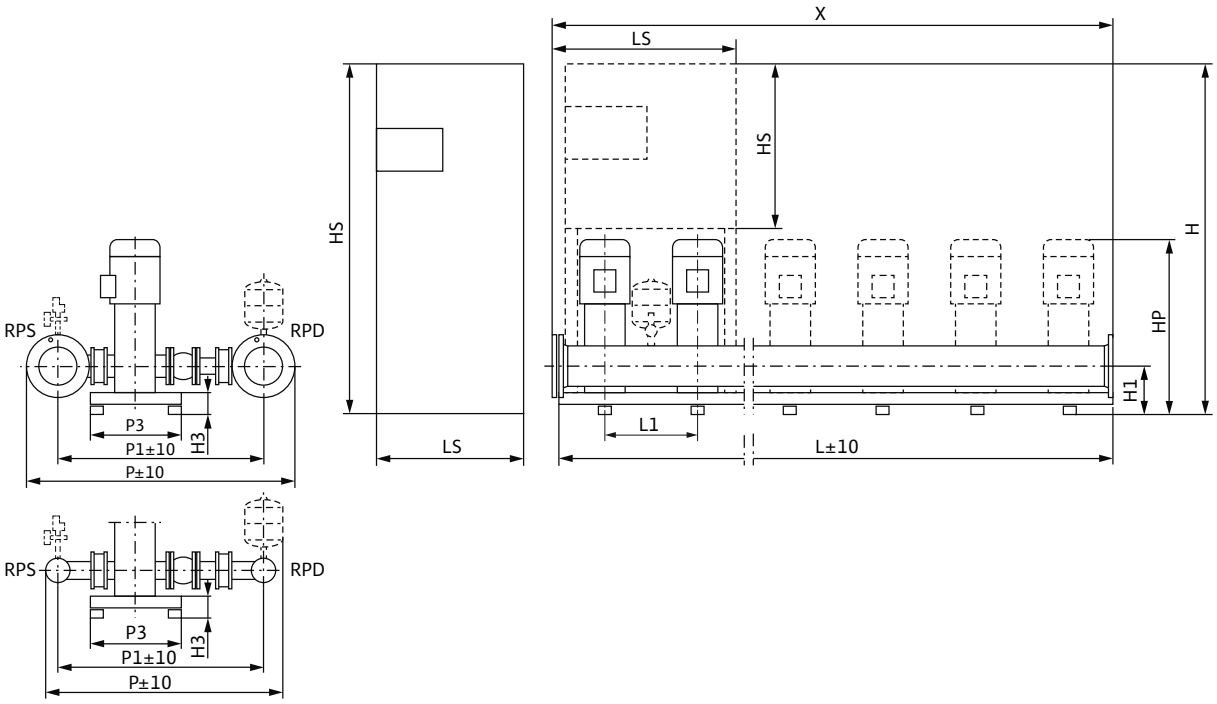

Sample systems are shown. Switchbox position depends on pump height.
Accessories (to be ordered separately): Optional WMS low-water cut-out switchgear kit
Installation surface: flat and horizontal
Installation location: dry, well ventilated and frost-proof

Dimensions, weights

Wilo-Comfort CO(R)- 2...	Nominal diameters of the pipe connec-tions on suction side	Nominal diameters of pipe connec-tions on the pressure side	Dimensions																Weight approx.	
											CO	COR	CO	COR	CO	COR	CO	COR	CO	COR
	RPS	*RPD*	*H1*	*H3*	*HP*	*L1*	*P*	*P1*	*P3*	*X*	*H*		*HS*		*L*		*LS*		*m*	
			mm																kg	
MVI 5202/CC	DN 150	DN 150	230	125	997	500	1310	1025	500	1000	1905	1900	760	1900	1000	1000	600	600	415	590
MVI 5203/CC	DN 150	DN 150	230	125	1078	500	1310	1025	500	1000	1905	1900	760	1900	1000	1000	600	600	455	660
MVI 5204/CC	DN 150	DN 150	230	125	1189	500	1310	1025	500	1000	1905	1900	760	1900	1000	1000	600	800	500	705
MVI 5205/CC	DN 150	DN 150	230	125	1392	500	1310	1025	500	1000	1905	1900	760	1900	1000	1000	600	800	530	745
MVI 5206/CC	DN 150	DN 150	230	125	1392	500	1310	1025	500	1000	1905	1900	760	1900	1000	1000	600	800	565	790
MVI 5207/CC	DN 150	DN 150	230	125	1574	500	1310	1025	500	1000	1905	1900	760	1900	1000	1000	600	800	605	830

Technical data Wilo-Comfort CO-/COR-MVI.../CC

Pump curves

Wilo-Comfort CO(R)-3 MVI 5202-5207/CC

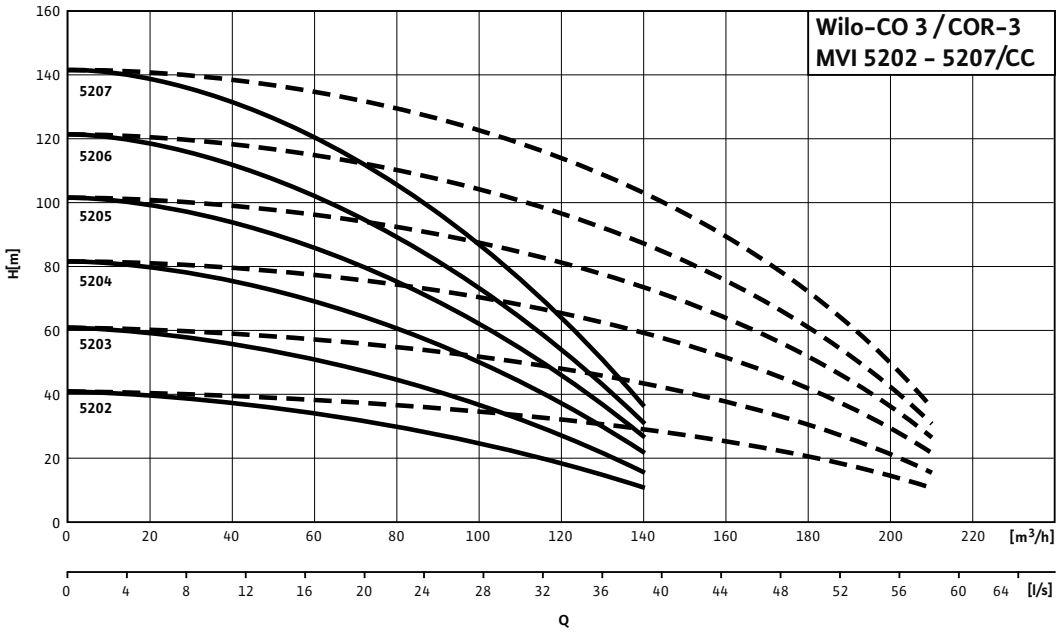

---- including standby pump

Motor data					
Wilo-Comfort CO(R)- 3...	**Nominal motor power**	**Nominal current 3~400 V, 50 Hz**	**Motor efficiency**		
	P_2	I_N	$\eta_{m\ 50\%}$	$\eta_{m\ 75\%}$	$\eta_{m\ 100\%}$
	kW	A	%		
MVI 5202/CC	5.5	10.7	85.2	86.9	88.1
MVI 5203/CC	7.5	14	88.5	89.9	89.5
MVI 5204/CC	11	20.2	87.5	89.3	89.4
MVI 5205/CC	15	25.7	88.4	90.2	90.3
MVI 5206/CC	15	25.7	88.4	90.2	90.3
MVI 5207/CC	18.5	31.4	89.0	90.8	90.9

Motor efficiency based on 400 V, 50 Hz

Technical data Wilo-Comfort CO-/COR-MVI.../CC

Dimension drawing

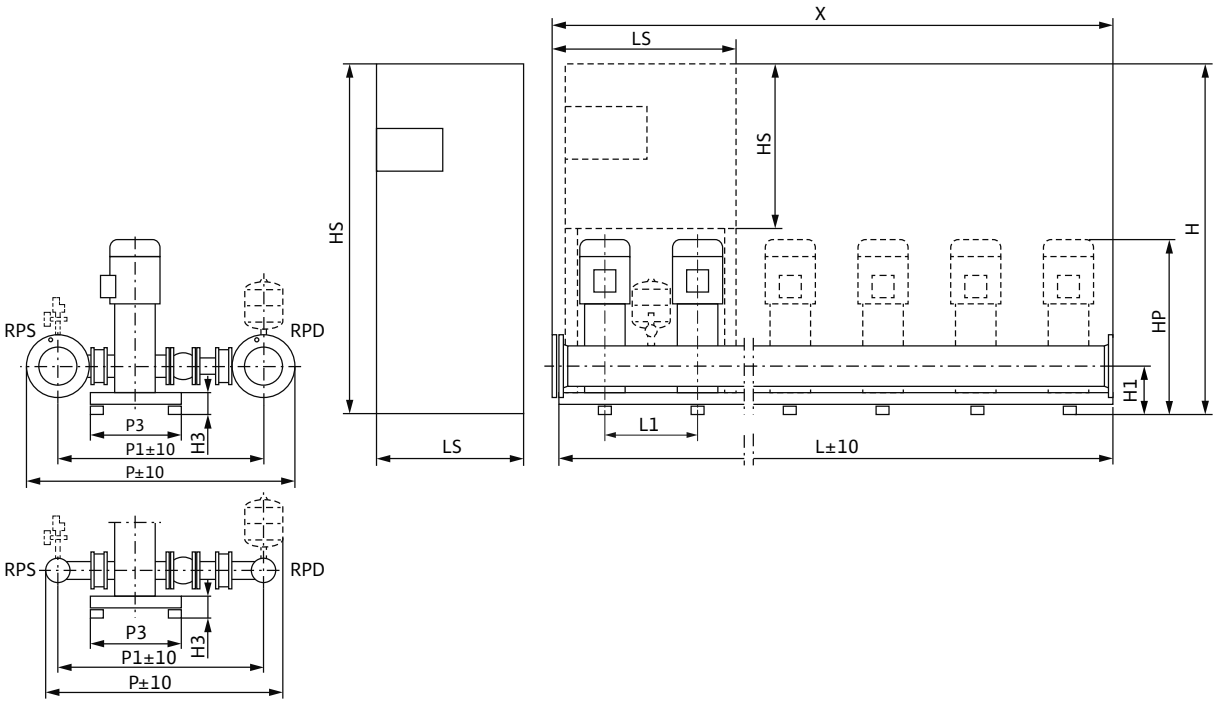

Sample systems are shown. Switchbox position depends on pump height.
Accessories (to be ordered separately): Optional WMS low-water cut-out switchgear kit
Installation surface: flat and horizontal
Installation location: dry, well ventilated and frost-proof

Dimensions, weights

Wilo-Comfort CO(R)- 3...	Nominal diameters of the pipe connections on suction side	Nominal diameters of pipe connections on the pressure side	Dimensions																Weight approx.	
											CO	COR	CO	COR	CO	COR	CO	COR	CO	COR
	RPS	*RPD*	*H1*	*H3*	*HP*	*L1*	*P*	*P1*	*P3*	*X*	*H*		*HS*		*L*		*LS*		*m*	
			mm																kg	
MVI 5202/CC	DN 150	DN 150	230	125	997	500	1310	1025	500	1500	1905	1900	760	1900	1500	1500	600	800	625	765
MVI 5203/CC	DN 150	DN 150	230	125	1078	500	1310	1025	500	1500	1905	1900	760	1900	1500	1500	600	800	680	855
MVI 5204/CC	DN 150	DN 150	230	125	1189	500	1310	1025	500	1500	1900	1900	1900	1900	1500	1500	600	1000	745	920
MVI 5205/CC	DN 150	DN 150	230	125	1392	500	1310	1025	500	1500	1900	1900	1900	1900	1500	1500	600	1000	795	975
MVI 5206/CC	DN 150	DN 150	230	125	1392	500	1310	1025	500	1500	1900	1900	1900	1900	1500	1500	600	1000	820	1035
MVI 5207/CC	DN 150	DN 150	230	125	1574	500	1310	1025	500	1500	1900	1900	1900	1900	1500	1500	600	1000	870	1085

Technical data Wilo-Comfort CO-/COR-MVI.../CC

Pump curves

Wilo-Comfort CO(R)-4 MVI 5202-5207/CC

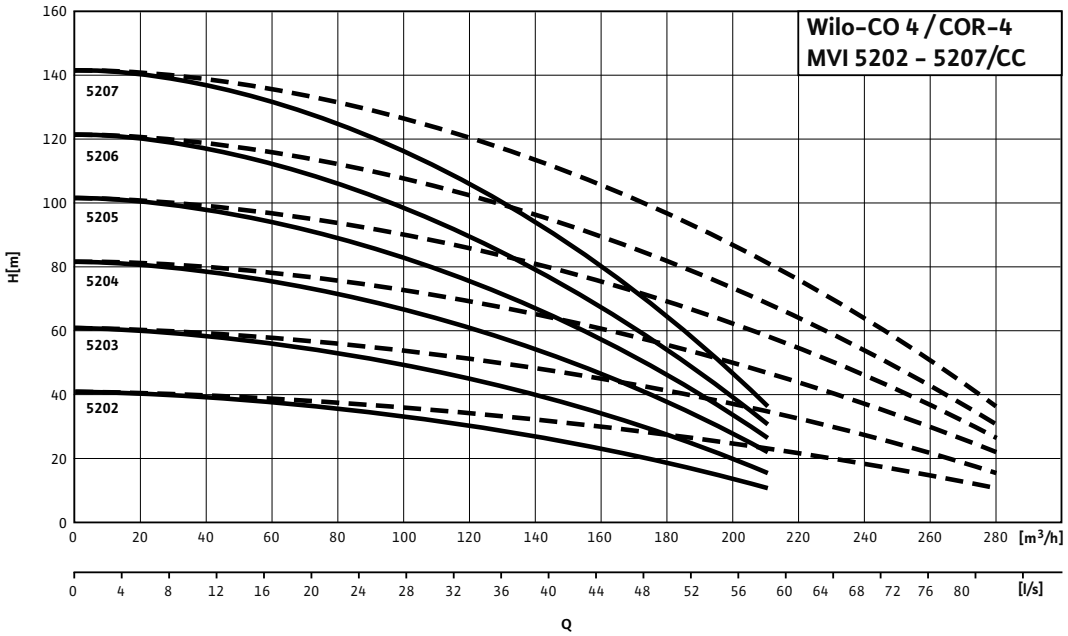

---- including standby pump

Motor data					
Wilo-Comfort CO(R)- 4...	**Nominal motor power**	**Nominal current 3~400 V, 50 Hz**	**Motor efficiency**		
	P_2	I_N	$\eta_{m\ 50\%}$	$\eta_{m\ 75\%}$	$\eta_{m\ 100\%}$
	kW	A	%		
MVI 5202/CC	5.5	10.7	85.2	86.9	88.1
MVI 5203/CC	7.5	14	88.5	89.9	89.5
MVI 5204/CC	11	20.2	87.5	89.3	89.4
MVI 5205/CC	15	25.7	88.4	90.2	90.3
MVI 5206/CC	15	25.7	88.4	90.2	90.3
MVI 5207/CC	18.5	31.4	89.0	90.8	90.9

Motor efficiency based on 400 V, 50 Hz

Technical data Wilo-Comfort CO-/COR-MVI.../CC

Dimension drawing

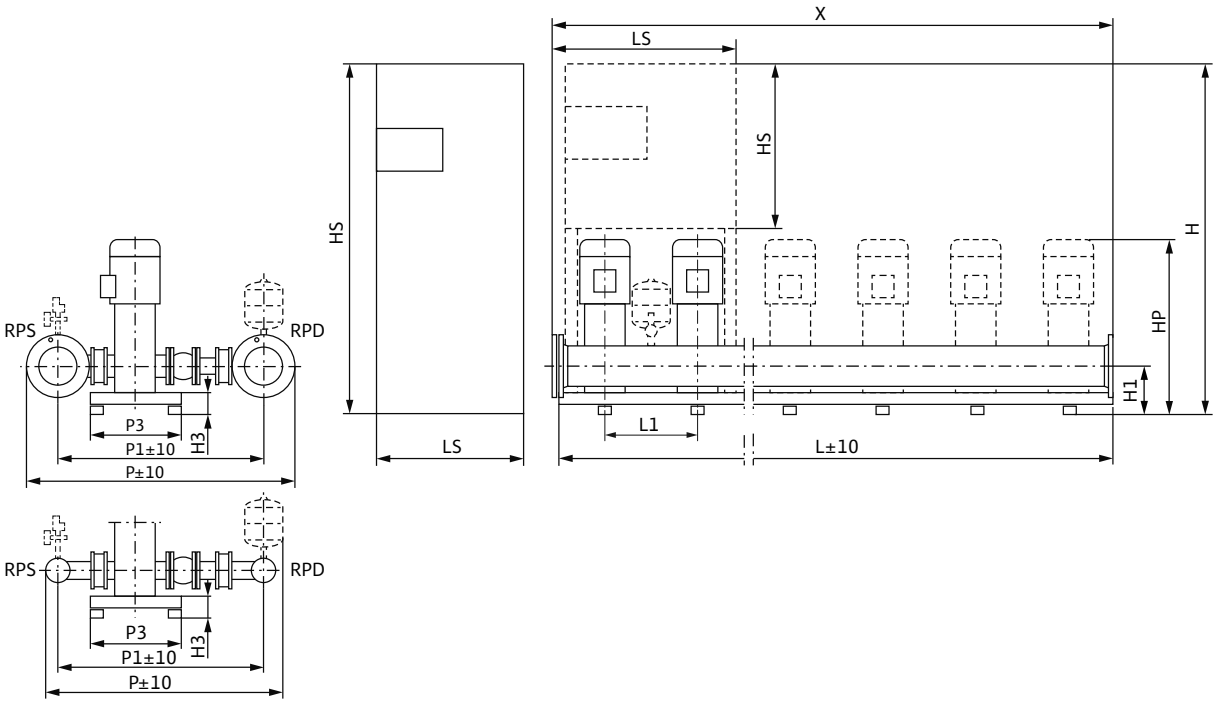

Sample systems are shown. Switchbox position depends on pump height.
Accessories (to be ordered separately): Optional WMS low-water cut-out switchgear kit
Installation surface: flat and horizontal
Installation location: dry, well ventilated and frost-proof

Dimensions, weights

Wilo-Comfort CO(R)- 4...	Nominal diameters of the pipe connections on suction side	Nominal diameters of pipe connections on the pressure side	Dimensions																Weight approx.	
											CO	COR	CO	COR	CO	COR	CO	COR	CO	COR
	RPS	*RPD*	*H1*	*H3*	*HP*	*L1*	*P*	*P1*	*P3*	*X*	*H*		*HS*		*L*		*LS*		*m*	
			mm																kg	
MVI 5202/CC	DN 150	DN 150	230	125	997	500	1310	1025	500	2000	1900	1900	1900	1900	2000	2000	600	800	825	960
MVI 5203/CC	DN 150	DN 150	230	125	1078	500	1310	1025	500	2000	1900	1900	1900	1900	2000	2000	600	800	895	1070
MVI 5204/CC	DN 150	DN 150	230	125	1189	500	1310	1025	500	2000	1900	1900	1900	1900	2000	2000	600	1000	985	1155
MVI 5205/CC	DN 150	DN 150	230	125	1392	500	1310	1025	500	2000	1900	1900	1900	1900	2000	2000	600	1000	1025	1235
MVI 5206/CC	DN 150	DN 150	230	125	1392	500	1310	1025	500	2000	1900	1900	1900	1900	2000	2000	600	1000	1090	1310
MVI 5207/CC	DN 150	DN 150	230	125	1574	500	1310	1025	500	2000	1900	1900	1900	1900	2000	2000	600	1000	1160	1390

Technical data Wilo-Comfort CO-/COR-MVI.../CC

Pump curves

Wilo-Comfort CO(R)-5 MVI 5202-5207/CC

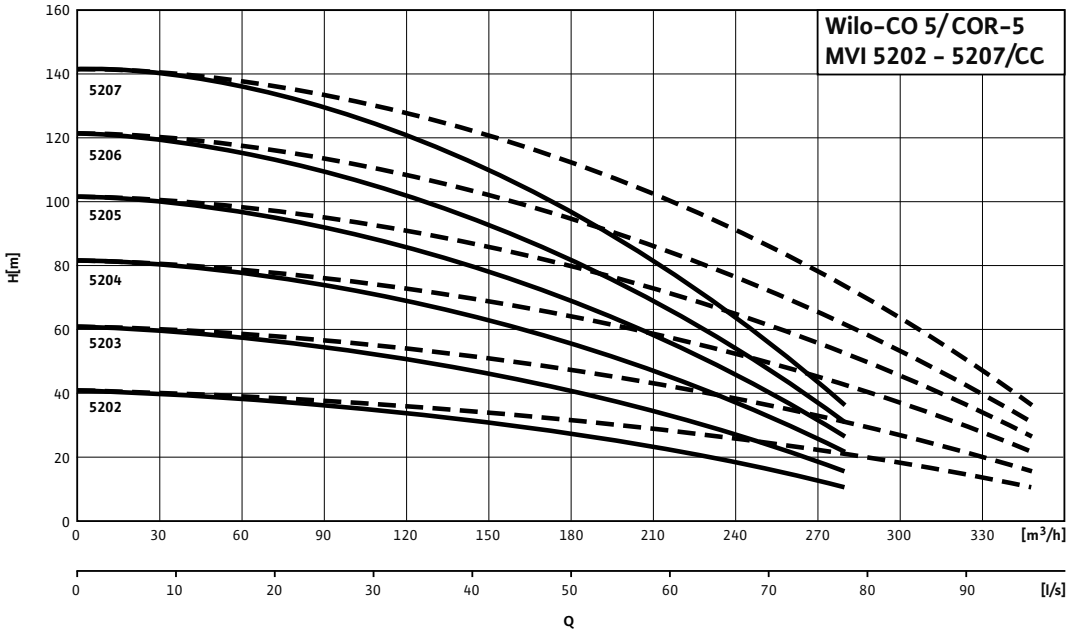

---- including standby pump

Motor data

Wilo-Comfort CO(R)- 5...	Nominal motor power	Nominal current 3~400 V, 50 Hz	Motor efficiency		
	P_2	I_N	$\eta_{m\ 50\%}$	$\eta_{m\ 75\%}$	$\eta_{m\ 100\%}$
	kW	A	%		
MVI 5202/CC	5.5	10.7	85.2	86.9	88.1
MVI 5203/CC	7.5	14	88.5	89.9	89.5
MVI 5204/CC	11	20.2	87.5	89.3	89.4
MVI 5205/CC	15	25.7	88.4	90.2	90.3
MVI 5206/CC	15	25.7	88.4	90.2	90.3
MVI 5207/CC	18.5	31.4	89.0	90.8	90.9

Motor efficiency based on 400 V, 50 Hz

Technical data Wilo-Comfort CO-/COR-MVI.../CC

Dimension drawing

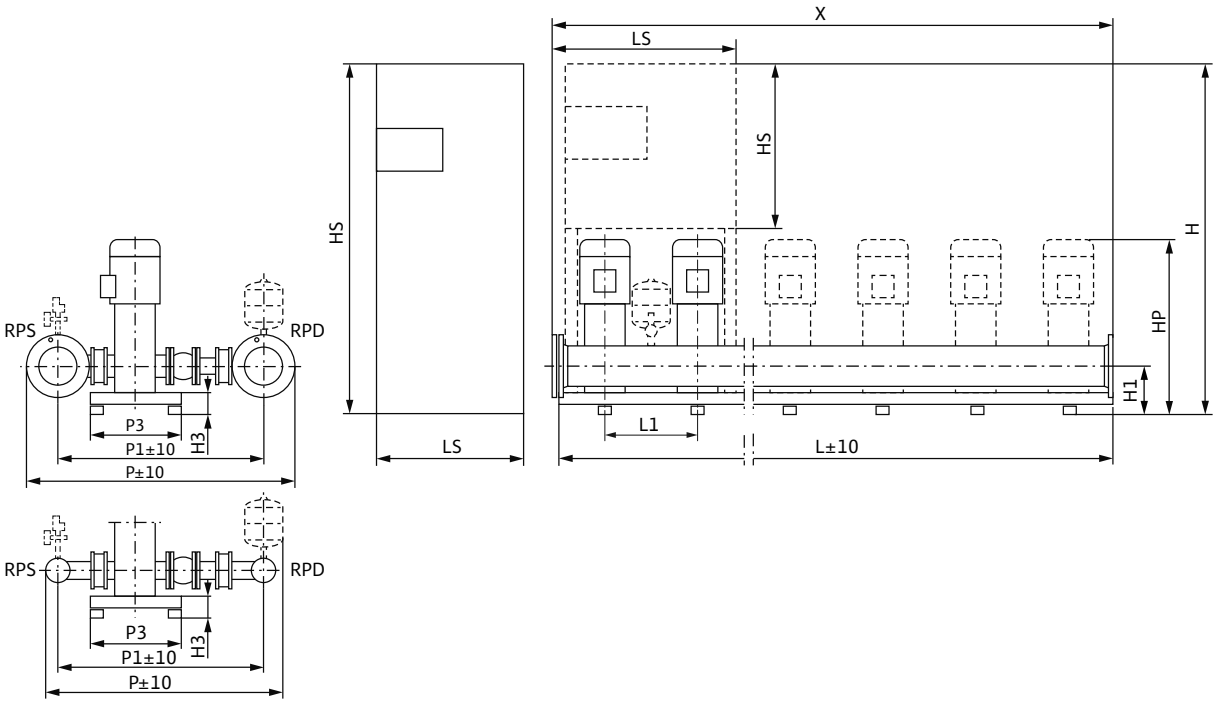

Sample systems are shown. Switchbox position depends on pump height.
Accessories (to be ordered separately): Optional WMS low-water cut-out switchgear kit
Installation surface: flat and horizontal
Installation location: dry, well ventilated and frost-proof

Dimensions, weights

Wilo-Comfort CO(R)- 5...	Nominal diameters of the pipe connec-tions on suction side	Nominal diameters of pipe connec-tions on the pres-sure side	Dimensions																Weight approx.	
											CO	COR	CO	COR	CO	COR	CO	COR	CO	COR
	RPS	*RPD*	*H1*	*H3*	*HP*	*L1*	*P*	*P1*	*P3*	*X*	*H*		*HS*		*L*		*LS*		*m*	
			mm																kg	
MVI 5202/CC	DN 150	DN 150	230	125	997	500	1310	1025	500	2500	1900	1900	1900	1900	2500	2500	800	1000	1100	1140
MVI 5203/CC	DN 150	DN 150	230	125	1078	500	1310	1025	500	2500	1900	1900	1900	1900	2500	2500	800	1000	1170	1280
MVI 5204/CC	DN 150	DN 150	230	125	1189	500	1310	1025	500	2500	1900	1900	1900	1900	2500	2500	800	1000	1280	1390
MVI 5205/CC	DN 150	DN 150	230	125	1392	500	1310	1025	500	2500	1900	1900	1900	1900	2500	2500	800	1200	1360	1535
MVI 5206/CC	DN 150	DN 150	230	125	1392	500	1310	1025	500	2500	1900	1900	1900	1900	2500	2500	800	1200	1440	1625
MVI 5207/CC	DN 150	DN 150	230	125	1574	500	1310	1025	500	2500	1900	1900	1900	1900	2500	2500	800	1800	1520	1720

Technical data Wilo-Comfort CO-/COR-MVI.../CC

Pump curves

Wilo-Comfort CO(R)-6 MVI 5202-5207/CC

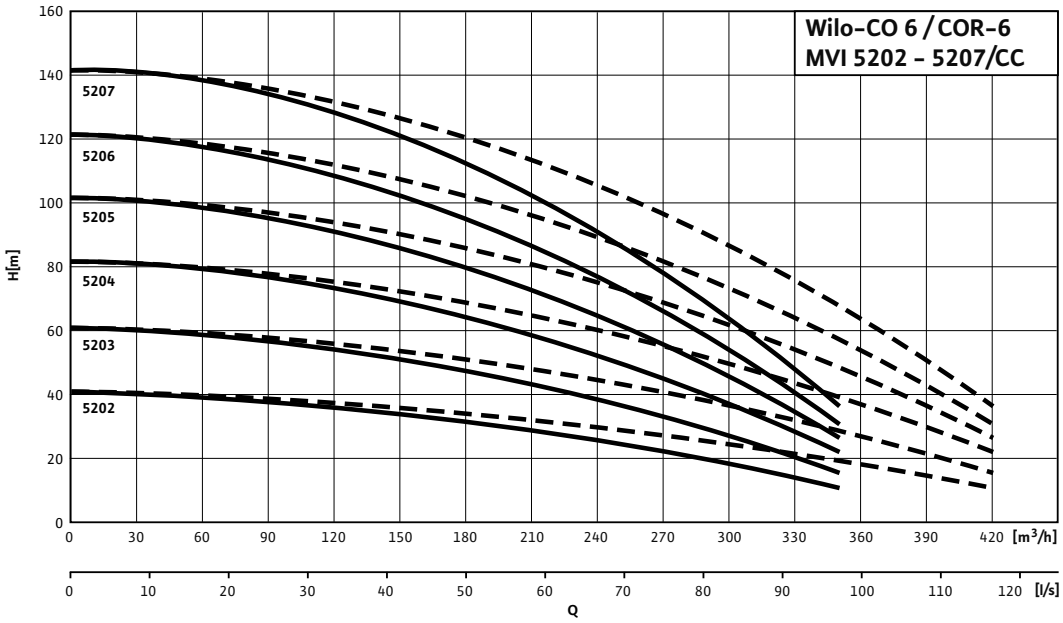

---- including standby pump

Motor data

Wilo-Comfort CO(R)- 6...	Nominal motor power	Nominal current 3~400 V, 50 Hz	Motor efficiency		
	P_2	I_N	$\eta_{m\ 50\%}$	$\eta_{m\ 75\%}$	$\eta_{m\ 100\%}$
	kW	A	%		
MVI 5202/CC	5.5	10.7	85.2	86.9	88.1
MVI 5203/CC	7.5	14	88.5	89.9	89.5
MVI 5204/CC	11	20.2	87.5	89.3	89.4
MVI 5205/CC	15	25.7	88.4	90.2	90.3
MVI 5206/CC	15	25.7	88.4	90.2	90.3
MVI 5207/CC	18.5	31.4	89.0	90.8	90.9

Motor efficiency based on 400 V, 50 Hz

Technical data Wilo-Comfort CO-/COR-MVI.../CC

Dimension drawing

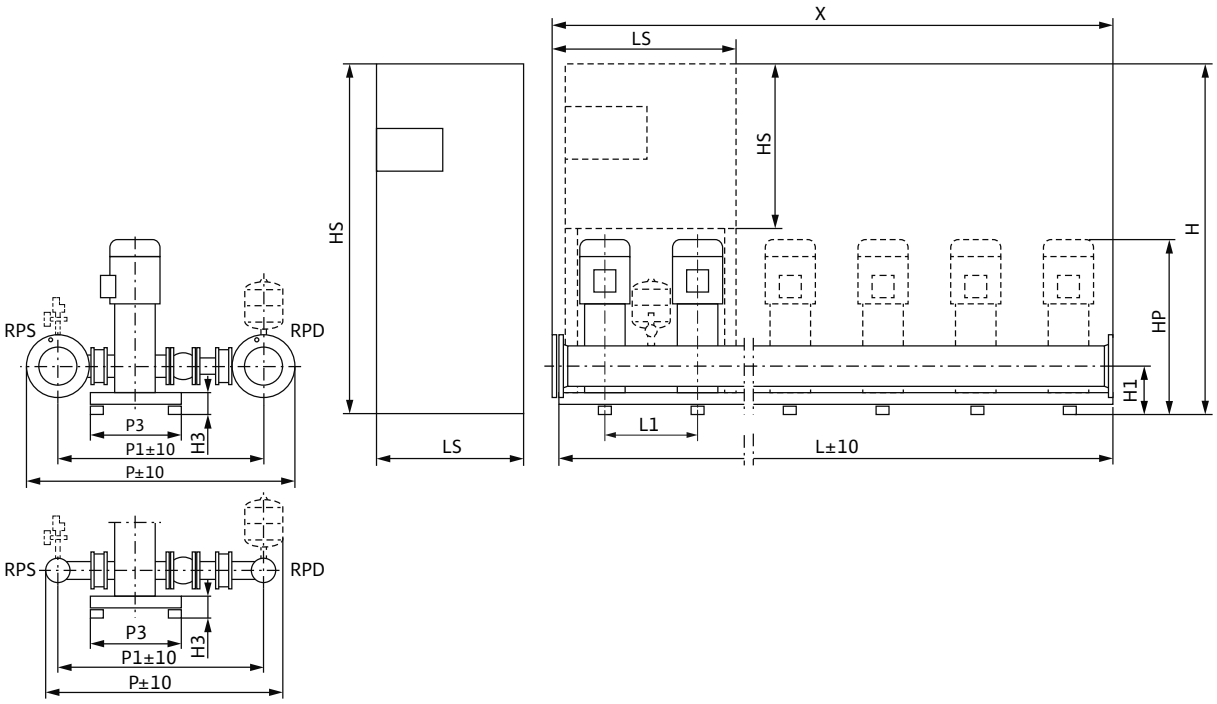

Sample systems are shown. Switchbox position depends on pump height.
Accessories (to be ordered separately): Optional WMS low-water cut-out switchgear kit
Installation surface: flat and horizontal
Installation location: dry, well ventilated and frost-proof

Dimensions, weights

Wilo-Comfort CO(R)- 6...	Nominal diameters of the pipe connections on suction side	Nominal diameters of pipe connections on the pressure side	Dimensions																Weight approx.	
											CO	COR	CO	COR	CO	COR	CO	COR	CO	COR
	RPS	*RPD*	*H1*	*H3*	*HP*	*L1*	*P*	*P1*	*P3*	*X*	*H*		*HS*		*L*		*LS*		*m*	
			mm																kg	
MVI 5202/CC	DN 150	DN 150	230	125	997	500	1310	1025	500	3000	1900	1900	1900	1900	3000	3000	800	1000	1260	1335
MVI 5203/CC	DN 150	DN 150	230	125	1078	500	1310	1025	500	3000	1900	1900	1900	1900	3000	3000	800	1000	1370	1540
MVI 5204/CC	DN 150	DN 150	230	125	1189	500	1310	1025	500	3000	1900	1900	1900	1900	3000	3000	800	1000	1510	1675
MVI 5205/CC	DN 150	DN 150	230	125	1392	500	1310	1025	500	3000	1900	1900	1900	1900	3000	3000	800	1200	1600	1775
MVI 5206/CC	DN 150	DN 150	230	125	1392	500	1310	1025	500	3000	1900	1900	1900	1900	3000	3000	800	1200	1710	1880
MVI 5207/CC	DN 150	DN 150	230	125	1574	500	1310	1025	500	3000	1900	1900	1900	1900	3000	3000	800	1800	1785	1990

Technical data Wilo-Comfort CO-/COR-MVI.../CC

Pump curves

Wilo-Comfort CO(R)-2 MVI 7001-7006/CC

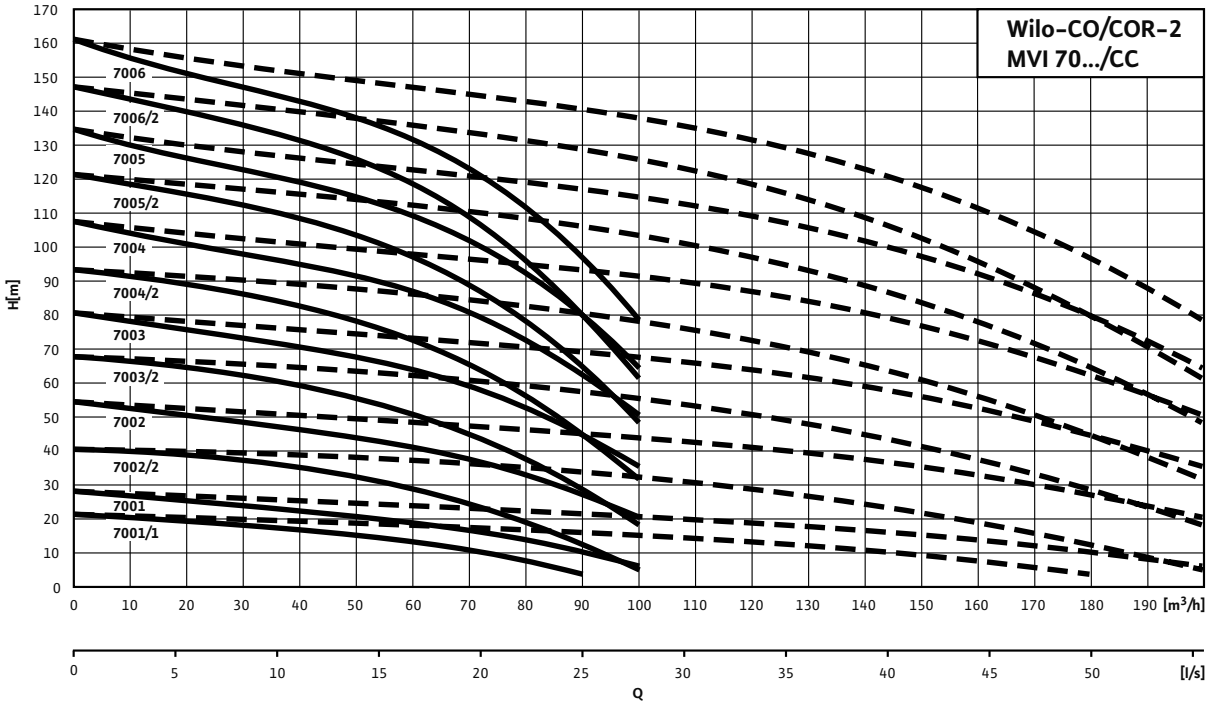

---- including standby pump

Motor data

Wilo-Comfort CO(R)- 2...	Nominal motor power	Nominal current 3~400 V, 50 Hz	Motor efficiency		
	P_2	I_N	$\eta_{m\ 50\%}$	$\eta_{m\ 75\%}$	$\eta_{m\ 100\%}$
	kW	A	%		
MVI 7001/1/CC	4	7.8	85.0	85.8	85.8
MVI 7001/CC	5.5	10.7	85.2	86.9	88.1
MVI 7002/2/CC	7.5	14	88.5	89.9	89.5
MVI 7002/CC	11	19.4	87.5	89.3	89.4
MVI 7003/2/CC	15	25.7	88.4	90.2	90.3
MVI 7003/CC	18.5	31.4	89.0	90.8	90.9
MVI 7004/2/CC	18.5	31.4	89.0	90.8	90.9
MVI 7004/CC	22	37.5	89.5	90.9	91.3
MVI 7005/2/CC	30	55.1	90.3	91.8	92.0
MVI 7005/CC	30	55.1	90.3	91.8	92.0
MVI 7006/2/CC	30	55.1	90.3	91.8	92.0
MVI 7006/CC	37	70	90.1	91.9	92.5

Motor efficiency based on 400 V, 50 Hz

Technical data Wilo-Comfort CO-/COR-MVI.../CC

Dimension drawing

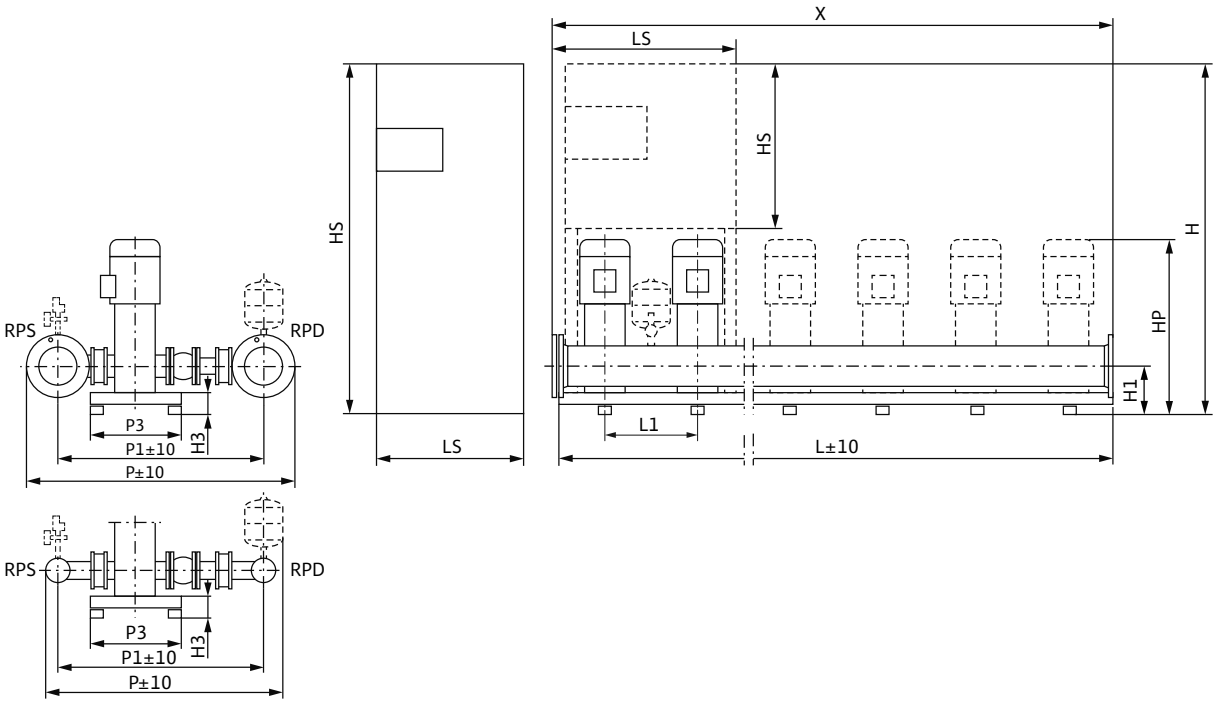

Sample systems are shown. Switchbox position depends on pump height.
Accessories (to be ordered separately): Optional WMS low-water cut-out switchgear kit
Installation surface: flat and horizontal
Installation location: dry, well ventilated and frost-proof

Dimensions, weights

Wilo-Comfort CO(R)- 2...	Nominal diameters of the pipe connec-tions on suction side	Nominal diameters of pipe connec-tions on the pres-sure side	Dimensions																Weight approx.	
											CO	COR	CO	COR	CO	COR	CO	COR	CO	COR
	RPS	*RPD*	*H1*	*H3*	*HP*	*L1*	*P*	*P1*	*P3*	*X*	*H*		*HS*		*L*		*LS*		*m*	
			mm																kg	
MVI 7001/1/CC	DN 200	DN 200	268	128	959	500	1640	1300	650	1000	1705	1705	600	760	1000	1000	600	600	560	564
MVI 7001/CC	DN 200	DN 200	268	128	1003	500	1640	1300	650	1000	1705	1900	760	1900	1000	1000	600	600	658	665
MVI 7002/2/CC	DN 200	DN 200	268	128	1133	500	1640	1300	650	1000	1705	1900	760	1900	1000	1000	600	600	709	716
MVI 7002/CC	DN 200	DN 200	268	128	1168	500	1640	1300	650	1000	1705	1900	760	1900	1000	1000	600	600	743	788
MVI 7003/2/CC	DN 200	DN 200	268	128	1446	500	1640	1300	650	1000	1705	1900	760	1900	1000	1000	600	800	816	816
MVI 7003/CC	DN 200	DN 200	268	128	1465	500	1640	1300	650	1000	1705	1900	760	1900	1000	1000	600	800	876	938
MVI 7004/2/CC	DN 200	DN 200	268	128	1550	500	1640	1300	650	1000	1705	1900	760	1900	1000	1000	600	800	884	946
MVI 7004/CC	DN 200	DN 200	268	128	1574	500	1640	1300	650	1000	1908	1900	760	1900	1000	1000	600	800	930	992
MVI 7005/2/CC	DN 200	DN 200	268	128	1739	500	1640	1300	650	1000	1900	1900	1900	1900	1000	1000	600	800	1111	1214
MVI 7005/CC	DN 200	DN 200	268	128	1739	500	1640	1300	650	1000	1900	1900	1900	1900	1000	1000	600	800	1111	1214
MVI 7006/2/CC	DN 200	DN 200	268	128	1824	500	1690	1340	650	1000	1900	1900	1900	1900	1000	1000	600	1200	1176	1281
MVI 7006/CC	DN 200	DN 200	268	128	1846	500	1690	1340	650	1000	1900	1900	1900	1900	1000	1000	600	1200	1220	1325

Technical data Wilo-Comfort CO-/COR-MVI.../CC

Pump curves

Wilo-Comfort CO(R)-3 MVI 7001-7006/CC

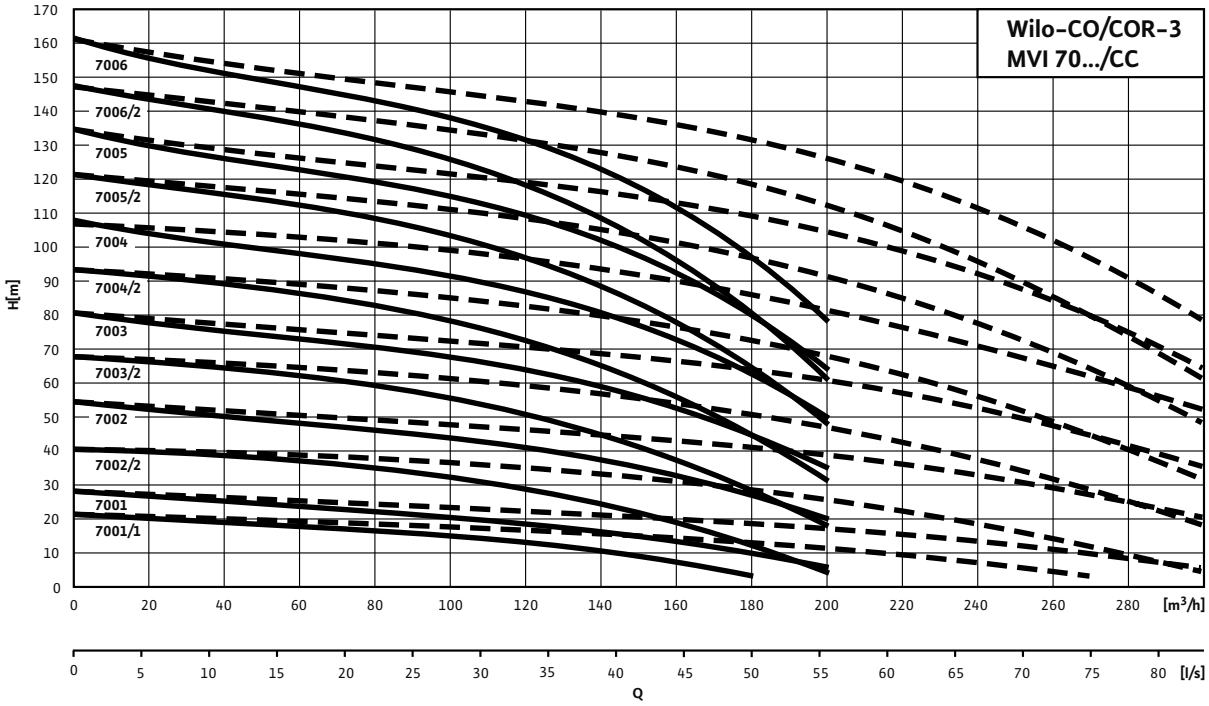

---- including standby pump

Motor data

Wilo-Comfort CO(R)- 3...	Nominal motor power	Nominal current 3~400 V, 50 Hz	Motor efficiency		
	P_2	I_N	$\eta_{m\ 50\%}$	$\eta_{m\ 75\%}$	$\eta_{m\ 100\%}$
	kW	A	%		
MVI 7001/1/CC	4	7.8	85.0	85.8	85.8
MVI 7001/CC	5.5	10.7	85.2	86.9	88.1
MVI 7002/2/CC	7.5	14	88.5	89.9	89.5
MVI 7002/CC	11	19.4	87.5	89.3	89.4
MVI 7003/2/CC	15	25.7	88.4	90.2	90.3
MVI 7003/CC	18.5	31.4	89.0	90.8	90.9
MVI 7004/2/CC	18.5	31.4	89.0	90.8	90.9
MVI 7004/CC	22	37.5	89.5	90.9	91.3
MVI 7005/2/CC	30	55.1	90.3	91.8	92.0
MVI 7005/CC	30	55.1	90.3	91.8	92.0
MVI 7006/2/CC	30	55.1	90.3	91.8	92.0
MVI 7006/CC	37	70	90.1	91.9	92.5

Motor efficiency based on 400 V, 50 Hz

Technical data Wilo-Comfort CO-/COR-MVI.../CC

Dimension drawing

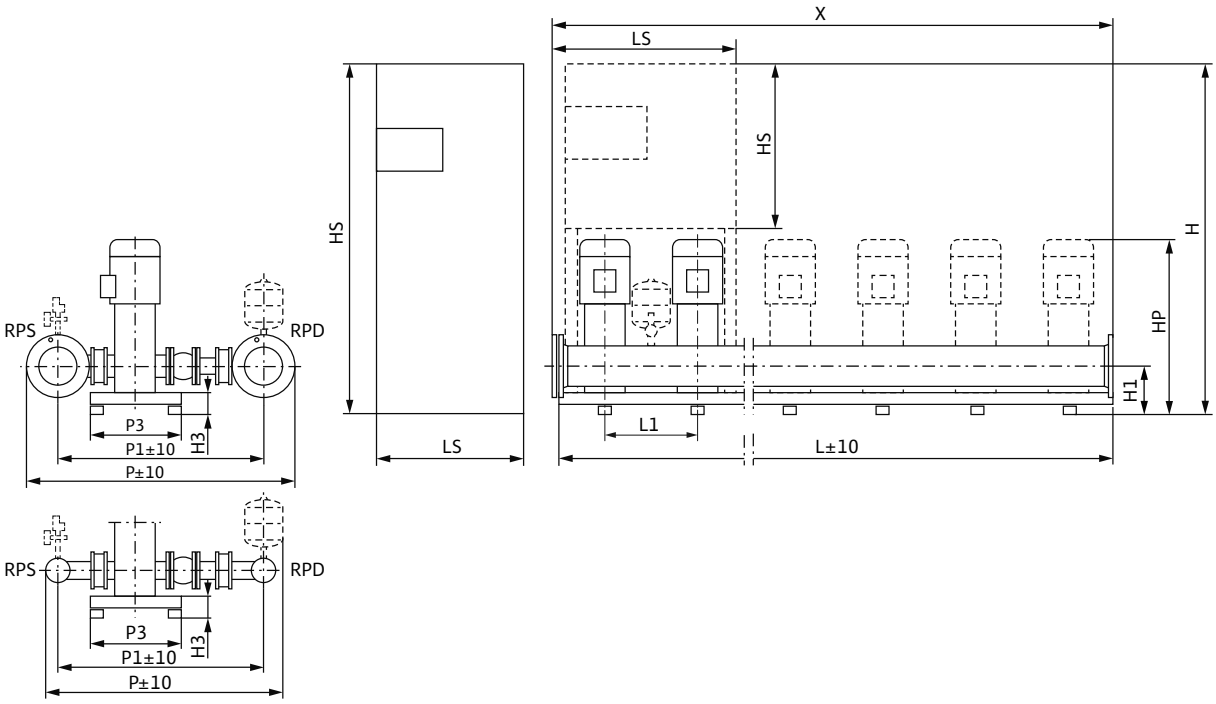

Sample systems are shown. Switchbox position depends on pump height.
Accessories (to be ordered separately): Optional WMS low-water cut-out switchgear kit
Installation surface: flat and horizontal
Installation location: dry, well ventilated and frost-proof

Dimensions, weights

Wilo-Comfort CO(R)- 3...	Nominal diameters of the pipe connections on suction side	Nominal diameters of pipe connections on the pressure side	Dimensions																Weight approx.	
											CO	COR	CO	COR	CO	COR	CO	COR	CO	COR
	RPS	*RPD*	*H1*	*H3*	*HP*	*L1*	*P*	*P1*	*P3*	*X*	*H*		*HS*		*L*		*LS*		*m*	
			mm																kg	
MVI 7001/1/CC	DN 200	DN 200	268	128	959	500	1640	1300	650	1500	1705	1705	600	760	1500	1500	600	600	735	740
MVI 7001/CC	DN 200	DN 200	268	128	1003	500	1640	1300	650	1500	1705	1900	760	1900	1500	1500	600	800	863	870
MVI 7002/2/CC	DN 200	DN 200	268	128	1133	500	1640	1300	650	1500	1705	1900	760	1900	1500	1500	600	800	938	945
MVI 7002/CC	DN 200	DN 200	268	128	1168	500	1640	1300	650	1500	1900	1900	1900	1900	1500	1500	600	1000	1001	1064
MVI 7003/2/CC	DN 200	DN 200	268	128	1446	500	1640	1300	650	1500	1900	1900	1900	1900	1500	1500	600	1000	1106	1170
MVI 7003/CC	DN 200	DN 200	268	128	1465	500	1640	1300	650	1500	1900	1900	1900	1900	1500	1500	600	1000	1200	1277
MVI 7004/2/CC	DN 200	DN 200	268	128	1550	500	1640	1300	650	1500	1900	1900	1900	1900	1500	1500	600	1000	1212	1289
MVI 7004/CC	DN 200	DN 200	268	128	1574	500	1640	1300	650	1500	1900	1900	1900	1900	1500	1500	600	1000	1278	1358
MVI 7005/2/CC	DN 200	DN 200	268	128	1739	500	1640	1300	650	1500	1900	1900	1900	1900	1500	1500	800	1200	1618	1721
MVI 7005/CC	DN 200	DN 200	268	128	1739	500	1640	1300	650	1500	1900	1900	1900	1900	1500	1500	800	1200	1618	1721
MVI 7006/2/CC	DN 200	DN 200	268	128	1824	500	1690	1340	650	1500	1900	1900	1900	1900	1500	1500	800	1200	1740	1845
MVI 7006/CC	DN 200	DN 200	268	128	1846	500	1690	1340	650	1500	1900	1900	1900	1900	1500	1500	800	1200	1806	1911

Technical data Wilo-Comfort CO-/COR-MVI.../CC

Pump curves

Wilo-Comfort CO(R)-4 MVI 7001-7006/CC

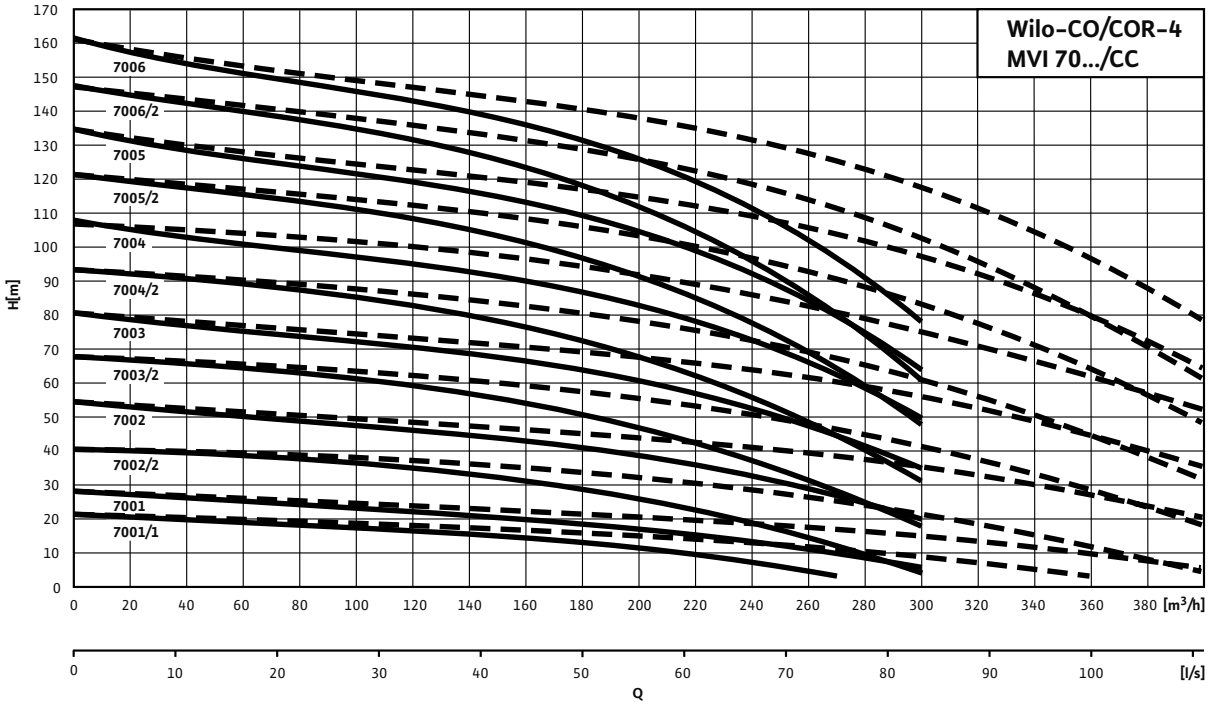

---- including standby pump

Motor data

Wilo-Comfort CO(R)- 4...	Nominal motor power	Nominal current 3~400 V, 50 Hz	Motor efficiency		
	P_2	I_N	$\eta_{m\ 50\%}$	$\eta_{m\ 75\%}$	$\eta_{m\ 100\%}$
	kW	A	%		
MVI 7001/1/CC	4	7.8	85.0	85.8	85.8
MVI 7001/CC	5.5	10.7	85.2	86.9	88.1
MVI 7002/2/CC	7.5	14	88.5	89.9	89.5
MVI 7002/CC	11	19.4	87.5	89.3	89.4
MVI 7003/2/CC	15	25.7	88.4	90.2	90.3
MVI 7003/CC	18.5	31.4	89.0	90.8	90.9
MVI 7004/2/CC	18.5	31.4	89.0	90.8	90.9
MVI 7004/CC	22	37.5	89.5	90.9	91.3
MVI 7005/2/CC	30	55.1	90.3	91.8	92.0
MVI 7005/CC	30	55.1	90.3	91.8	92.0
MVI 7006/2/CC	30	55.1	90.3	91.8	92.0
MVI 7006/CC	37	70	90.1	91.9	92.5

Motor efficiency based on 400 V, 50 Hz

Technical data Wilo-Comfort CO-/COR-MVI.../CC

Dimension drawing

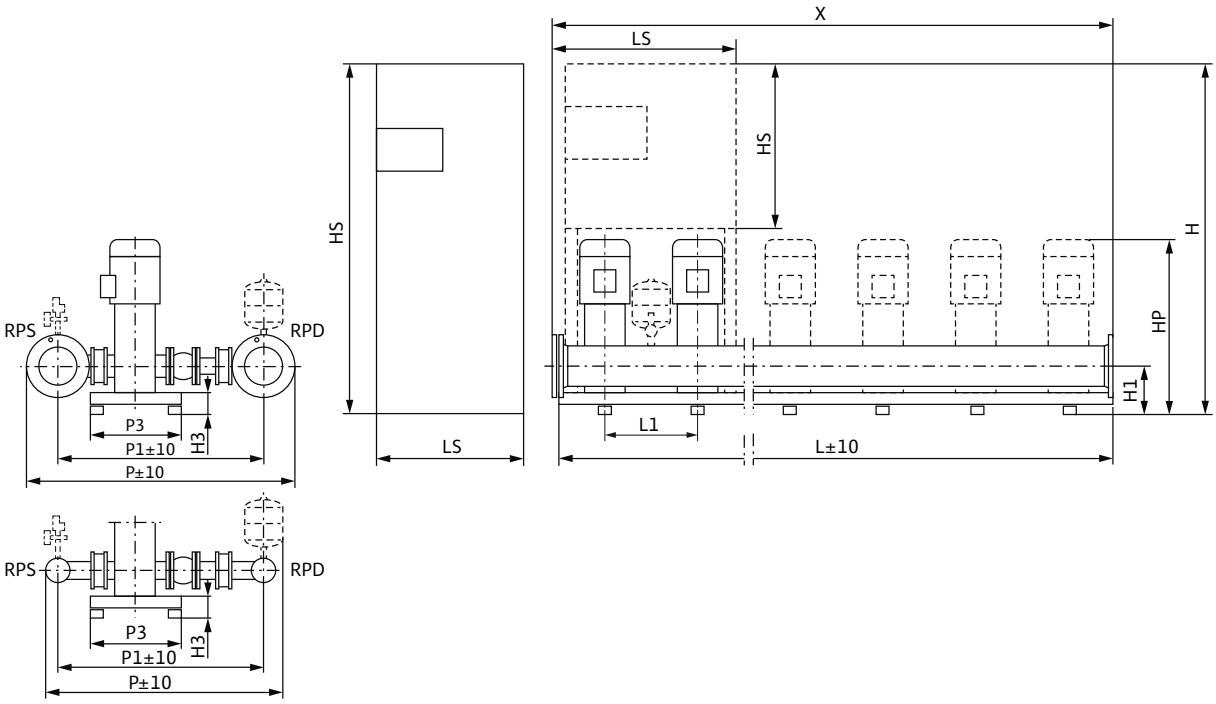

Sample systems are shown. Switchbox position depends on pump height.
Accessories (to be ordered separately): Optional WMS low-water cut-out switchgear kit
Installation surface: flat and horizontal
Installation location: dry, well ventilated and frost-proof

Dimensions, weights

Wilo-Comfort CO(R)- 4...	Nominal diameters of the pipe connec-tions on suction side	Nominal diameters of pipe connec-tions on the pres-sure side	Dimensions																Weight approx.	
											CO	COR	CO	COR	CO	COR	CO	COR	CO	COR
	RPS	*RPD*	*H1*	*H3*	*HP*	*L1*	*P*	*P1*	*P3*	*X*	*H*		*HS*		*L*		*LS*		*m*	
			mm																kg	
MVI 7001/1/CC	DN 200	DN 200	268	128	959	500	1640	1300	650	2000	1705	1705	600	760	2000	2000	600	600	934	938
MVI 7001/CC	DN 200	DN 200	268	128	1003	500	1640	1300	650	2000	1900	1900	1900	1900	2000	2000	600	800	1049	1074
MVI 7002/2/CC	DN 200	DN 200	268	128	1133	500	1640	1300	650	2000	1900	1900	1900	1900	2000	2000	600	800	1148	1173
MVI 7002/CC	DN 200	DN 200	268	128	1168	500	1640	1300	650	2000	1900	1900	1900	1900	2000	2000	600	1000	1242	1304
MVI 7003/2/CC	DN 200	DN 200	268	128	1446	500	1640	1300	650	2000	1900	1900	1900	1900	2000	2000	600	1000	1379	1443
MVI 7003/CC	DN 200	DN 200	268	128	1465	500	1640	1300	650	2000	1900	1900	1900	1900	2000	2000	600	1000	1479	1559
MVI 7004/2/CC	DN 200	DN 200	268	128	1550	500	1640	1300	650	2000	1900	1900	1900	1900	2000	2000	600	1000	1495	1575
MVI 7004/CC	DN 200	DN 200	268	128	1574	500	1640	1300	650	2000	1900	1900	1900	1900	2000	2000	600	1000	1587	1667
MVI 7005/2/CC	DN 200	DN 200	268	128	1739	500	1640	1300	650	2000	1900	1900	1900	1900	2000	2000	800	1200	1978	2081
MVI 7005/CC	DN 200	DN 200	268	128	1739	500	1640	1300	650	2000	1900	1900	1900	1900	2000	2000	800	1200	1978	2081
MVI 7006/2/CC	DN 200	DN 200	268	128	1824	500	1690	1340	650	2000	1900	1900	1900	1900	2000	2000	800	1200	2133	2238
MVI 7006/CC	DN 200	DN 200	268	128	1846	500	1690	1340	650	2000	1900	1900	1900	1900	2000	2000	800	1200	2221	2326

Technical data Wilo-Comfort CO-/COR-MVI.../CC

Pump curves

Wilo-Comfort CO(R)-5 MVI 7001-7006/CC

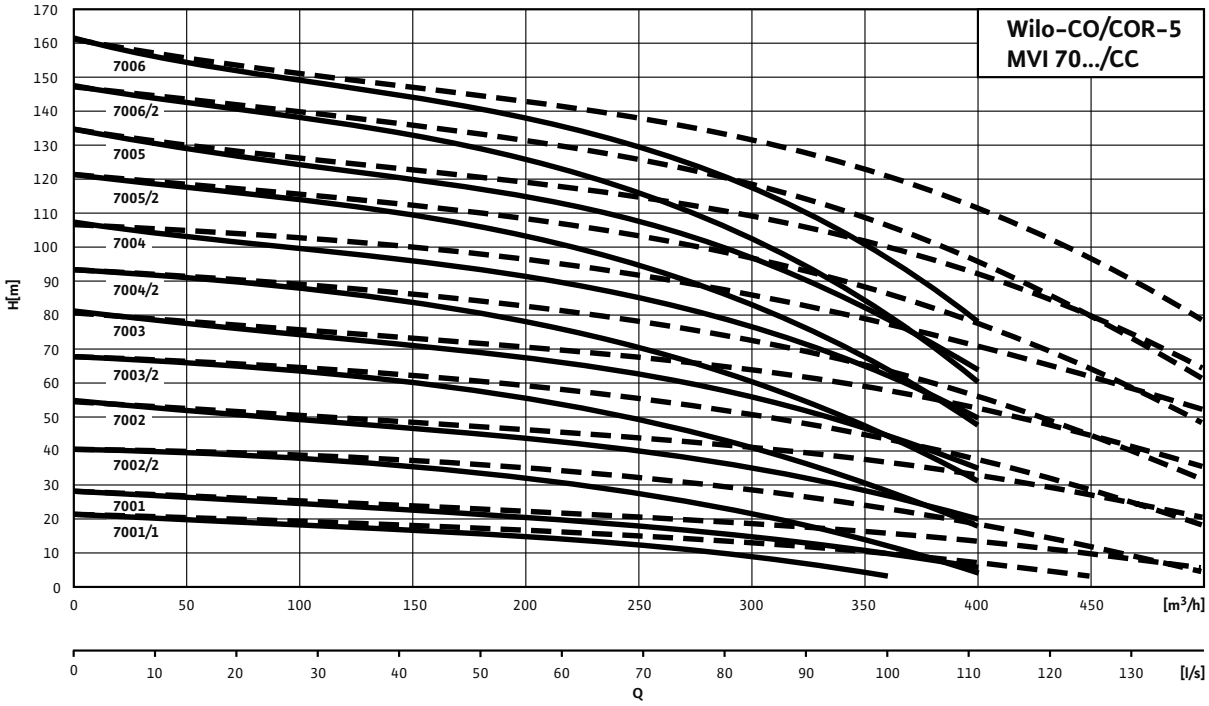

---- including standby pump

Motor data

Wilo-Comfort CO(R)- 5...	Nominal motor power	Nominal current 3~400 V, 50 Hz	Motor efficiency		
	P_2	I_N	$\eta_{m\ 50\%}$	$\eta_{m\ 75\%}$	$\eta_{m\ 100\%}$
	kW	A	%		
MVI 7001/1/CC	4	7.8	85.0	85.8	85.8
MVI 7001/CC	5.5	10.7	85.2	86.9	88.1
MVI 7002/2/CC	7.5	14	88.5	89.9	89.5
MVI 7002/CC	11	19.4	87.5	89.3	89.4
MVI 7003/2/CC	15	25.7	88.4	90.2	90.3
MVI 7003/CC	18.5	31.4	89.0	90.8	90.9
MVI 7004/2/CC	18.5	31.4	89.0	90.8	90.9
MVI 7004/CC	22	37.5	89.5	90.9	91.3
MVI 7005/2/CC	30	55.1	90.3	91.8	92.0
MVI 7005/CC	30	55.1	90.3	91.8	92.0
MVI 7006/2/CC	30	55.1	90.3	91.8	92.0
MVI 7006/CC	37	70	90.1	91.9	92.5

Motor efficiency based on 400 V, 50 Hz

Technical data Wilo-Comfort CO-/COR-MVI.../CC

Dimension drawing

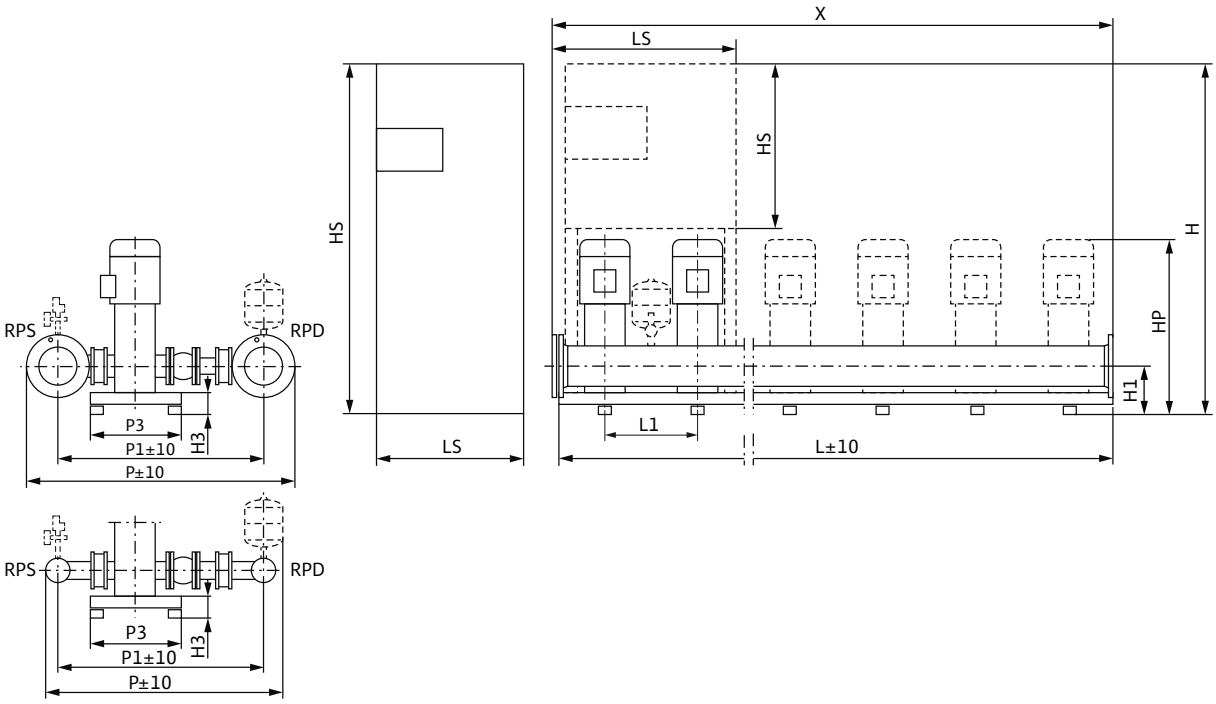

Sample systems are shown. Switchbox position depends on pump height.
Accessories (to be ordered separately): Optional WMS low-water cut-out switchgear kit
Installation surface: flat and horizontal
Installation location: dry, well ventilated and frost-proof

Dimensions, weights

Wilo-Comfort CO(R)- 5...	Nominal diameters of the pipe connections on suction side	Nominal diameters of pipe connections on the pressure side	Dimensions																Weight approx.	
											CO	COR	CO	COR	CO	COR	CO	COR	CO	COR
	RPS	*RPD*	*H1*	*H3*	*HP*	*L1*	*P*	*P1*	*P3*	*X*	*H*		*HS*		*L*		*LS*		*m*	
			mm																kg	
MVI 7001/1/CC	DN 250	DN 250	268	128	959	500	1640	1300	650	2500	1705	1705	600	760	2500	2500	600	760	1196	1202
MVI 7001/CC	DN 250	DN 250	268	128	1003	500	1640	1300	650	2500	1900	1900	1900	1900	2500	2500	800	1000	1323	1347
MVI 7002/2/CC	DN 250	DN 250	268	128	1133	500	1640	1300	650	2500	1900	1900	1900	1900	2500	2500	800	1000	1446	1471
MVI 7002/CC	DN 250	DN 250	268	128	1168	500	1640	1300	650	2500	1900	1900	1900	1900	2500	2500	800	1000	1530	1592
MVI 7003/2/CC	DN 250	DN 250	268	128	1446	500	1640	1300	650	2500	1900	1900	1900	1900	2500	2500	800	1200	1701	1765
MVI 7003/CC	DN 250	DN 250	268	128	1465	500	1640	1300	650	2500	1900	1900	1900	1900	2500	2500	800	1800	1980	2060
MVI 7004/2/CC	DN 250	DN 250	268	128	1550	500	1640	1300	650	2500	1900	1900	1900	1900	2500	2500	800	1800	2000	2080
MVI 7004/CC	DN 250	DN 250	268	128	1574	500	1640	1300	650	2500	1900	1900	1900	1900	2500	2500	800	1800	2115	2195
MVI 7005/2/CC	DN 250	DN 250	268	128	1739	500	1640	1300	650	2500	1900	1900	1900	1900	2500	2500	1200	2000	2467	2570
MVI 7005/CC	DN 250	DN 250	268	128	1739	500	1640	1300	650	2500	1900	1900	1900	1900	2500	2500	1200	2000	2467	2570
MVI 7006/2/CC	DN 250	DN 250	268	128	1824	500	1690	1340	650	2500	1900	1900	1900	1900	2500	2500	1200	1200	3676	2781
MVI 7006/CC	DN 250	DN 250	268	128	1824	500	1690	1340	650	2500	1900	1900	1900	1900	2500	2500	1200	1200	2786	2891

Technical data Wilo-Comfort CO-/COR-MVI.../CC

Pump curves

Wilo-Comfort CO(R)-6 MVI 7001-7006/CC

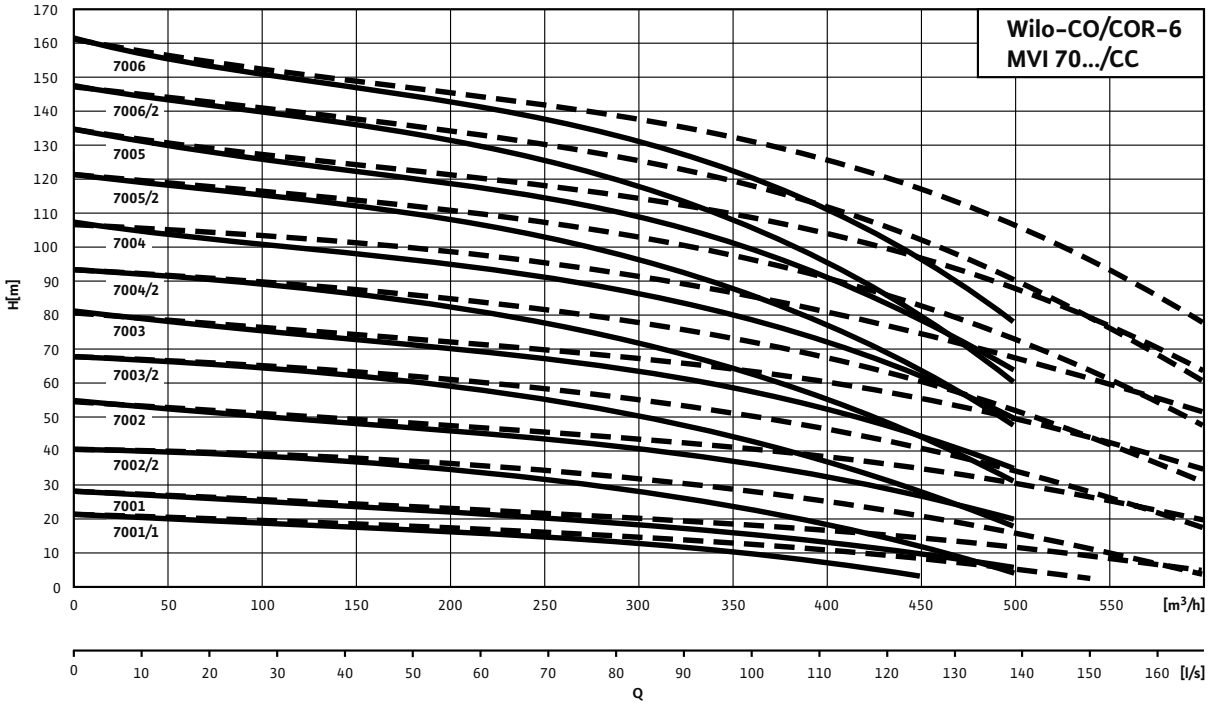

---- including standby pump

Motor data

Wilo-Comfort CO(R)- 6...	Nominal motor power	Nominal current 3~400 V, 50 Hz	Motor efficiency		
	P_2	I_N	$\eta_{m\ 50\%}$	$\eta_{m\ 75\%}$	$\eta_{m\ 100\%}$
	kW	A	%		
MVI 7001/1/CC	4	7.8	85.0	85.8	85.8
MVI 7001/CC	5.5	10.7	85.2	86.9	88.1
MVI 7002/2/CC	7.5	14	88.5	89.9	89.5
MVI 7002/CC	11	19.4	87.5	89.3	89.4
MVI 7003/2/CC	15	25.7	88.4	90.2	90.3
MVI 7003/CC	18.5	31.4	89.0	90.8	90.9
MVI 7004/2/CC	18.5	31.4	89.0	90.8	90.9
MVI 7004/CC	22	37.5	89.5	90.9	91.3
MVI 7005/2/CC	30	55.1	90.3	91.8	92.0
MVI 7005/CC	30	55.1	90.3	91.8	92.0
MVI 7006/2/CC	30	55.1	90.3	91.8	92.0
MVI 7006/CC	37	70	90.1	91.9	92.5

Motor efficiency based on 400 V, 50 Hz

Technical data Wilo-Comfort CO-/COR-MVI.../CC

Dimension drawing

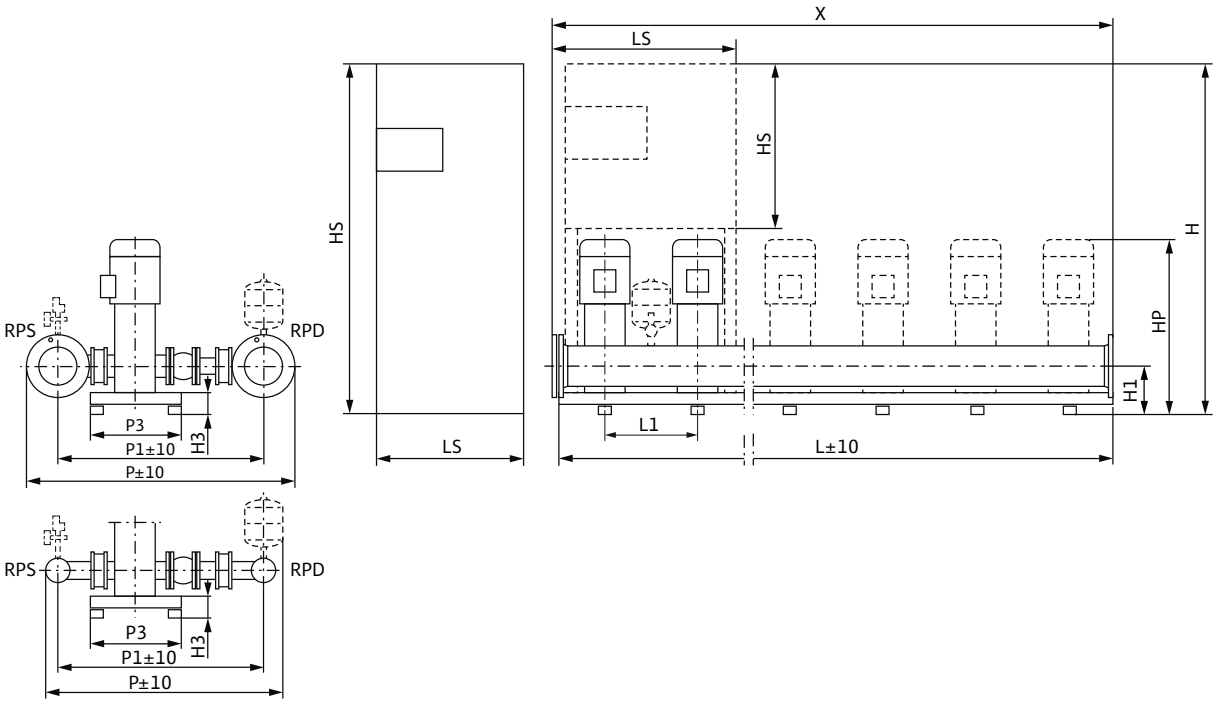

Sample systems are shown. Switchbox position depends on pump height.
Accessories (to be ordered separately): Optional WMS low-water cut-out switchgear kit
Installation surface: flat and horizontal
Installation location: dry, well ventilated and frost-proof

Dimensions, weights

Wilo-Comfort CO(R)- 6...	Nominal diameters of the pipe connections on suction side	Nominal diameters of pipe connections on the pressure side	Dimensions																Weight approx.	
											CO	COR	CO	COR	CO	COR	CO	COR	CO	COR
	RPS	*RPD*	*H1*	*H3*	*HP*	*L1*	*P*	*P1*	*P3*	*X*	*H*		*HS*		*L*		*LS*		*m*	
			mm																kg	
MVI 7001/1/CC	DN 250	DN 250	268	128	959	500	1640	1300	650	3000	1705	1705	600	760	3000	3000	600	760	1395	1401
MVI 7001/CC	DN 250	DN 250	268	128	1003	500	1640	1300	650	3000	1900	1900	1900	1900	3000	3000	800	1000	1561	1586
MVI 7002/2/CC	DN 250	DN 250	268	128	1133	500	1640	1300	650	3000	1900	1900	1900	1900	3000	3000	800	1000	1708	1733
MVI 7002/CC	DN 250	DN 250	268	128	1168	500	1640	1300	650	3000	1900	1900	1900	1900	3000	3000	800	1000	1772	1835
MVI 7003/2/CC	DN 250	DN 250	268	128	1446	500	1640	1300	650	3000	1900	1900	1900	1900	3000	3000	800	1200	1976	2040
MVI 7003/CC	DN 250	DN 250	268	128	1465	500	1640	1300	650	3000	1900	1900	1900	1900	3000	3000	800	1800	2265	2345
MVI 7004/2/CC	DN 250	DN 250	268	128	1550	500	1640	1300	650	3000	1900	1900	1900	1900	3000	3000	800	1800	2289	2369
MVI 7004/CC	DN 250	DN 250	268	128	1574	500	1640	1300	650	3000	1900	1900	1900	1900	3000	3000	800	1800	2427	2507
MVI 7005/2/CC	DN 250	DN 250	268	128	1739	500	1640	1300	650	3000	1900	1900	1900	1900	3000	3000	1200	2000	2830	2933
MVI 7005/CC	DN 250	DN 250	268	128	1739	500	1640	1300	650	3000	1900	1900	1900	1900	3000	3000	1200	2000	2830	2933
MVI 7006/2/CC	DN 250	DN 250	268	128	1824	500	1690	1340	650	3000	1900	1900	1900	1900	3000	3000	1200	1200	3071	3176
MVI 7006/CC	DN 250	DN 250	268	128	1846	500	1690	1340	650	3000	1900	1900	1900	1900	3000	3000	1200	1200	3203	3308

Technical data Wilo-Comfort CO-/COR-MVI.../CC

Pump curves

Wilo-Comfort CO(R)-2 MVI 9501-9504/CC

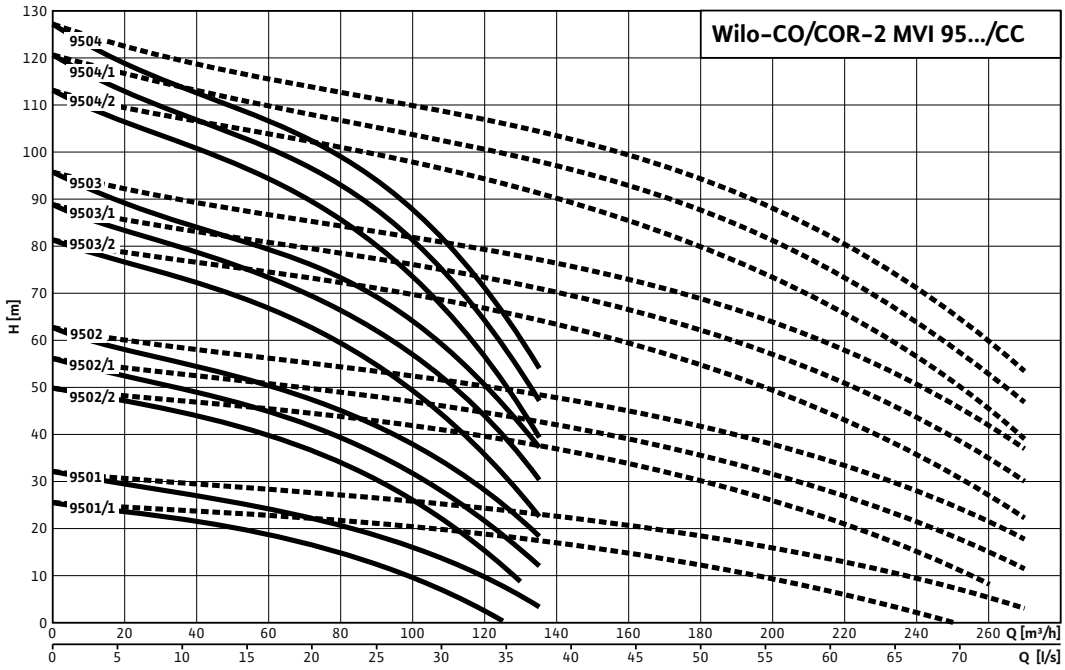

---- including standby pump

Motor data

Wilo-Comfort CO(R)- 2...	Nominal motor power	Nominal current 3~400 V, 50 Hz	Motor efficiency		
	P_2	I_N	$\eta_{m\ 50\%}$	$\eta_{m\ 75\%}$	$\eta_{m\ 100\%}$
	kW	A	%		
MVI 9501/1/CC	7.5	14	88.5	89.9	89.5
MVI 9501/CC	9	16.3	86.6	88.4	88.8
MVI 9501N/CC	9	16.3	86.6	88.4	88.8
MVI 9502/2/CC	15	25.7	88.4	90.2	90.3
MVI 9502/1/CC	15	25.7	88.4	90.2	90.3
MVI 9502/CC	18.5	31.4	89.0	90.8	90.9
MVI 9503/2/CC	22	37.5	89.5	90.9	91.3
MVI 9503/1/CC	30	55.1	90.3	91.8	92.0
MVI 9503/CC	30	55.1	90.3	91.8	92.0
MVI 9504/2/CC	30	55.1	90.3	91.8	92.0
MVI 9504/1/CC	37	70	90.1	91.9	92.5
MVI 9504/CC	37	70	90.1	91.9	92.5

Motor efficiency based on 400 V, 50 Hz

Technical data Wilo-Comfort CO-/COR-MVI.../CC

Dimension drawing

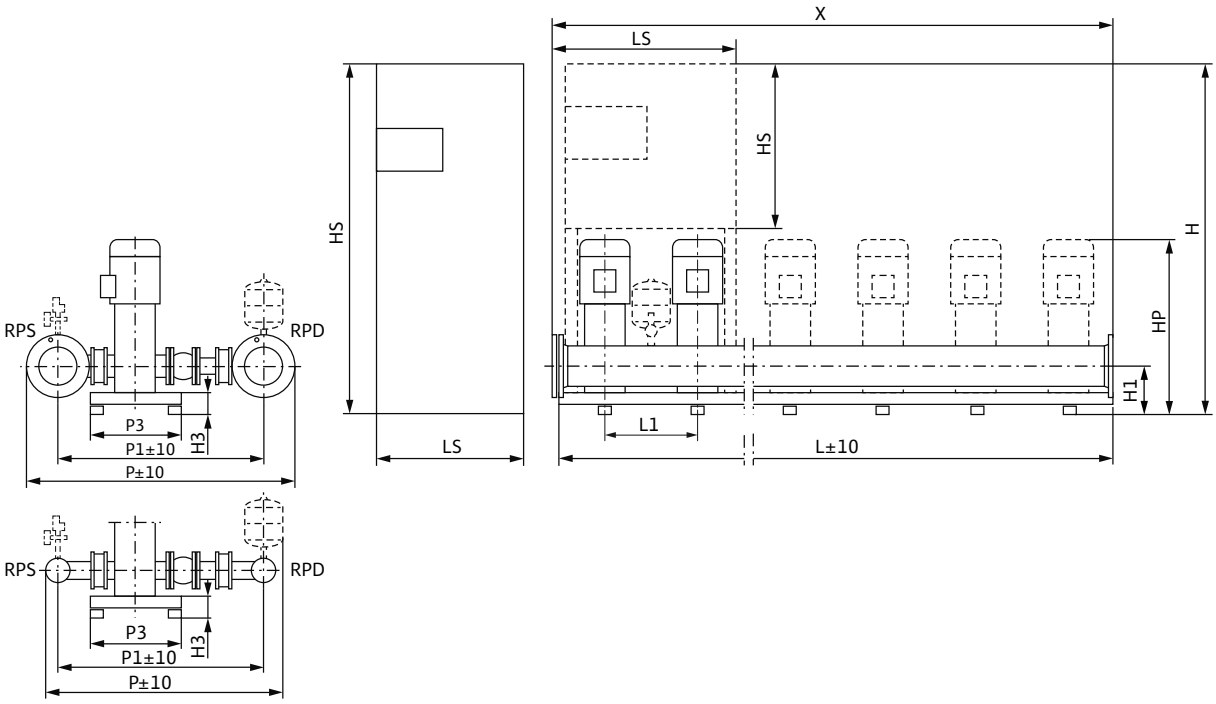

Sample systems are shown. Switchbox position depends on pump height.
Accessories (to be ordered separately): Optional WMS low-water cut-out switchgear kit
Installation surface: flat and horizontal
Installation location: dry, well ventilated and frost-proof

Dimensions, weights

Wilo-Comfort CO(R)- 2...	Nominal diameters of the pipe connections on suction side	Nominal diameters of pipe connections on the pressure side	Dimensions																Weight approx.	
											CO	COR	CO	COR	CO	COR	CO	COR	CO	COR
	RPS	*RPD*	*H1*	*H3*	*HP*	*L1*	*P*	*P1*	*P3*	*X*	*H*		*HS*		*L*		*LS*		*m*	
			mm																kg	
MVI 9501/1/CC	DN 200	DN 200	268	128	1061	500	1640	1300	650	1000	1705	1900	760	1900	1000	1000	600	600	680	687
MVI 9501/CC	DN 200	DN 200	268	128	1096	500	1640	1300	650	1000	1905	1900	760	1900	1000	1000	600	600	714	759
MVI 9501N/CC	DN 200	DN 200	268	128	1289	500	1640	1300	650	1000	1905	1900	760	1900	1000	1000	600	600	754	799
MVI 9502/2/CC	DN 200	DN 200	268	128	1387	500	1640	1300	650	1000	1905	1900	760	1900	1000	1000	600	600	812	858
MVI 9502/1/CC	DN 200	DN 200	268	128	1387	500	1640	1300	650	1000	1905	1900	760	1900	1000	1000	600	600	812	858
MVI 9502/CC	DN 200	DN 200	268	128	1406	500	1640	1300	650	1000	1905	1900	760	1900	1000	1000	600	600	872	934
MVI 9503/2/CC	DN 200	DN 200	268	128	1528	500	1640	1300	650	1000	1900	1900	1900	1900	1000	1000	600	600	927	989
MVI 9503/1/CC	DN 200	DN 200	268	128	1608	500	1640	1300	650	1000	1905	1900	1900	1900	1000	1000	600	800	1100	1203
MVI 9503/CC	DN 200	DN 200	268	128	1608	500	1640	1300	650	1000	1900	1900	1900	1900	1000	1000	600	800	1100	1203
MVI 9504/2/CC	DN 200	DN 200	268	128	1706	500	1640	1300	650	1000	1900	1900	1900	1900	1000	1000	600	800	1110	1213
MVI 9504/1/CC	DN 200	DN 200	268	128	1728	500	1640	1300	650	1000	1900	1900	1900	1900	1000	1000	600	1200	1162	1267
MVI 9504/CC	DN 200	DN 200	268	128	1728	500	1640	1300	650	1000	1900	1900	1900	1900	1000	1000	600	1200	1162	1267

Technical data Wilo-Comfort CO-/COR-MVI.../CC

Pump curves

Wilo-Comfort CO(R)-3 MVI 9501-9504/CC

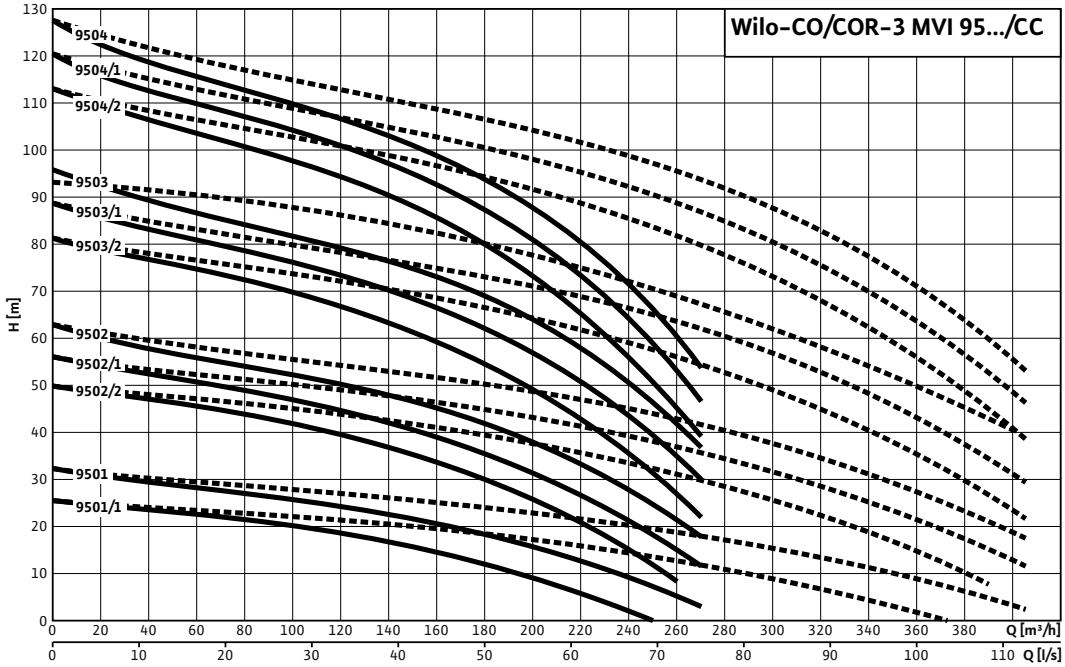

---- including standby pump

Motor data

Wilo-Comfort CO(R)- 3...	Nominal motor power	Nominal current 3~400 V, 50 Hz	Motor efficiency		
	P_2	I_N	$\eta_{m\ 50\%}$	$\eta_{m\ 75\%}$	$\eta_{m\ 100\%}$
	kW	A	%		
MVI 9501/1/CC	7.5	14	88.5	89.9	89.5
MVI 9501/CC	9	16.3	86.6	88.4	88.8
MVI 9501N/CC	9	16.3	86.6	88.4	88.8
MVI 9502/2/CC	15	25.7	88.4	90.2	90.3
MVI 9502/1/CC	15	25.7	88.4	90.2	90.3
MVI 9502/CC	18.5	31.4	89.0	90.8	90.9
MVI 9503/2/CC	22	37.5	89.5	90.9	91.3
MVI 9503/1/CC	30	55.1	90.3	91.8	92.0
MVI 9503/CC	30	55.1	90.3	91.8	92.0
MVI 9504/2/CC	30	55.1	90.3	91.8	92.0
MVI 9504/1/CC	37	70	90.1	91.9	92.5
MVI 9504/CC	37	70	90.1	91.9	92.5

Motor efficiency based on 400 V, 50 Hz

Technical data Wilo-Comfort CO-/COR-MVI.../CC

Dimension drawing

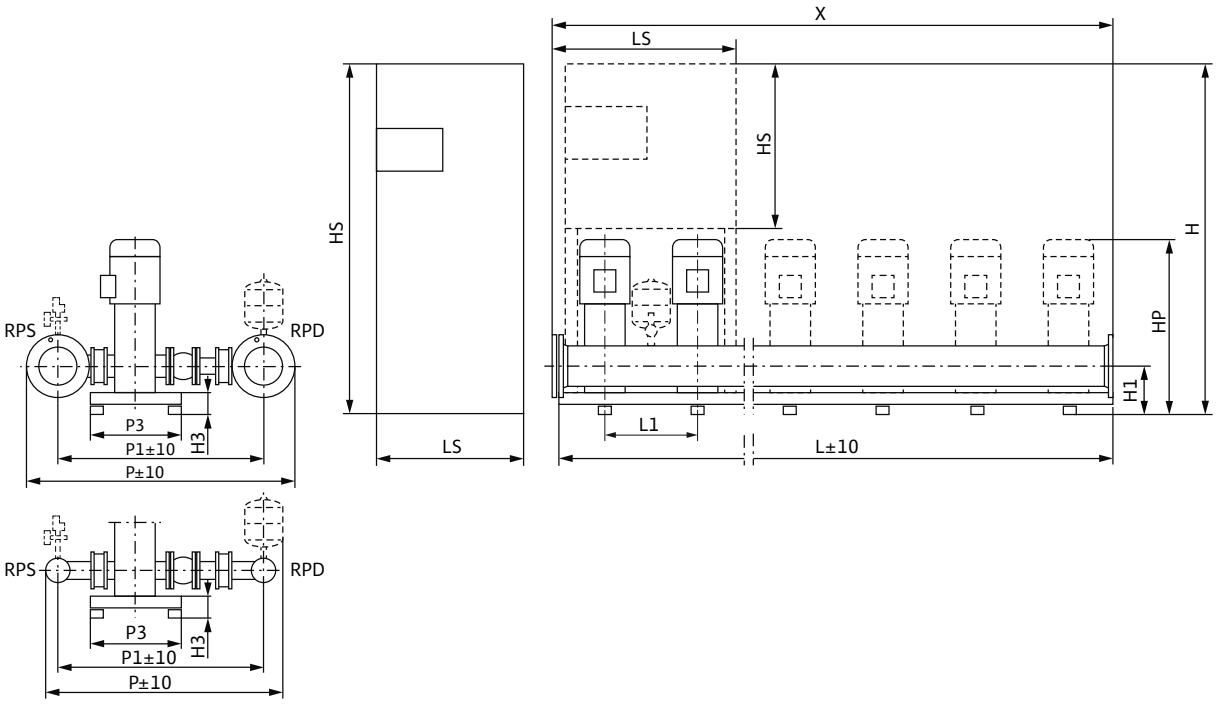

Sample systems are shown. Switchbox position depends on pump height.
Accessories (to be ordered separately): Optional WMS low-water cut-out switchgear kit
Installation surface: flat and horizontal
Installation location: dry, well ventilated and frost-proof

Dimensions, weights

Wilo-Comfort CO(R)- 3...	Nominal diameters of the pipe connec-tions on suction side	Nominal diameters of pipe connec-tions on the pres-sure side	Dimensions																Weight approx.	
											CO	COR	CO	COR	CO	COR	CO	COR	CO	COR
	RPS	*RPD*	*H1*	*H3*	*HP*	*L1*	*P*	*P1*	*P3*	*X*	*H*		*HS*		*L*		*LS*		*m*	
			mm																kg	
MVI 9501/1/CC	DN 200	DN 200	268	128	1061	500	1640	1300	650	1500	1705	1900	–	1900	1500	1500	–	800	925	932
MVI 9501/CC	DN 200	DN 200	268	128	1096	500	1640	1300	650	1500	1900	1900	1900	1900	1500	1500	600	1000	989	1051
MVI 9501N/CC	DN 200	DN 200	268	128	1289	500	1640	1300	650	1500	1900	1900	1900	1900	1500	1500	600	1000	1049	1111
MVI 9502/2/CC	DN 200	DN 200	268	128	1387	500	1640	1300	650	1500	1900	1900	1900	1900	1500	1500	600	1000	1131	1195
MVI 9502/1/CC	DN 200	DN 200	268	128	1387	500	1640	1300	650	1500	1900	1900	1900	1900	1500	1500	600	1000	1131	1195
MVI 9502/CC	DN 200	DN 200	268	128	1406	500	1640	1300	650	1500	1900	1900	1900	1900	1500	1500	600	1000	1225	1302
MVI 9503/2/CC	DN 200	DN 200	268	128	1528	500	1640	1300	650	1500	1900	1900	1900	1900	1500	1500	600	1000	1305	1385
MVI 9503/1/CC	DN 200	DN 200	268	128	1608	500	1640	1300	650	1500	1900	1900	1900	1900	1500	1500	800	1200	1633	1736
MVI 9503/CC	DN 200	DN 200	268	128	1608	500	1640	1300	650	1500	1900	1900	1900	1900	1500	1500	800	1200	1633	1736
MVI 9504/2/CC	DN 200	DN 200	268	128	1706	500	1640	1300	650	1500	1900	1900	1900	1900	1500	1500	800	1200	1648	1751
MVI 9504/1/CC	DN 200	DN 200	268	128	1728	500	1640	1300	650	1500	1900	1900	1900	1900	1500	1500	800	1800	1727	1832
MVI 9504/CC	DN 200	DN 200	268	128	1728	500	1640	1300	650	1500	1900	1900	1900	1900	1500	1500	800	1800	1727	1832

Technical data Wilo-Comfort CO-/COR-MVI.../CC

Pump curves

Wilo-Comfort CO(R)-4 MVI 9501-9504/CC

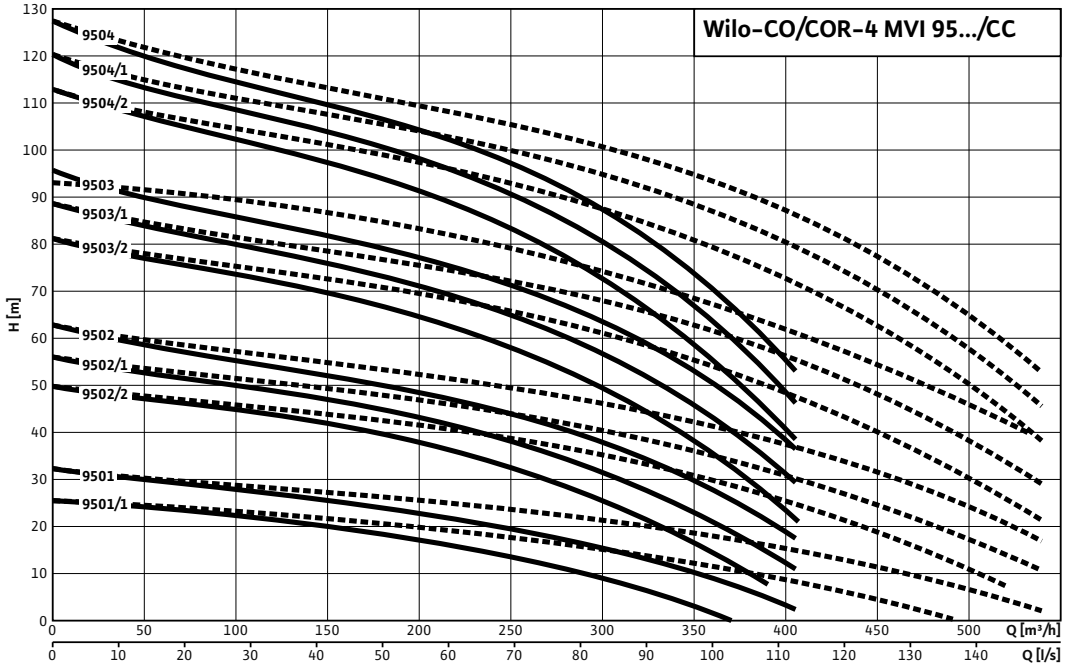

---- including standby pump

Motor data

Wilo-Comfort CO(R)- 4...	Nominal motor power	Nominal current 3~400 V, 50 Hz	Motor efficiency		
	P_2	I_N	$\eta_{m\ 50\%}$	$\eta_{m\ 75\%}$	$\eta_{m\ 100\%}$
	kW	A	%		
MVI 9501/1/CC	7.5	14	88.5	89.9	89.5
MVI 9501/CC	9	16.3	86.6	88.4	88.8
MVI 9501N/CC	9	16.3	86.6	88.4	88.8
MVI 9502/2/CC	15	25.7	88.4	90.2	90.3
MVI 9502/1/CC	15	25.7	88.4	90.2	90.3
MVI 9502/CC	18.5	31.4	89.0	90.8	90.9
MVI 9503/2/CC	22	37.5	89.5	90.9	91.3
MVI 9503/1/CC	30	55.1	90.3	91.8	92.0
MVI 9503/CC	30	55.1	90.3	91.8	92.0
MVI 9504/2/CC	30	55.1	90.3	91.8	92.0
MVI 9504/1/CC	37	70	90.1	91.9	92.5
MVI 9504/CC	37	70	90.1	91.9	92.5

Motor efficiency based on 400 V, 50 Hz

Technical data Wilo-Comfort CO-/COR-MVI.../CC

Dimension drawing

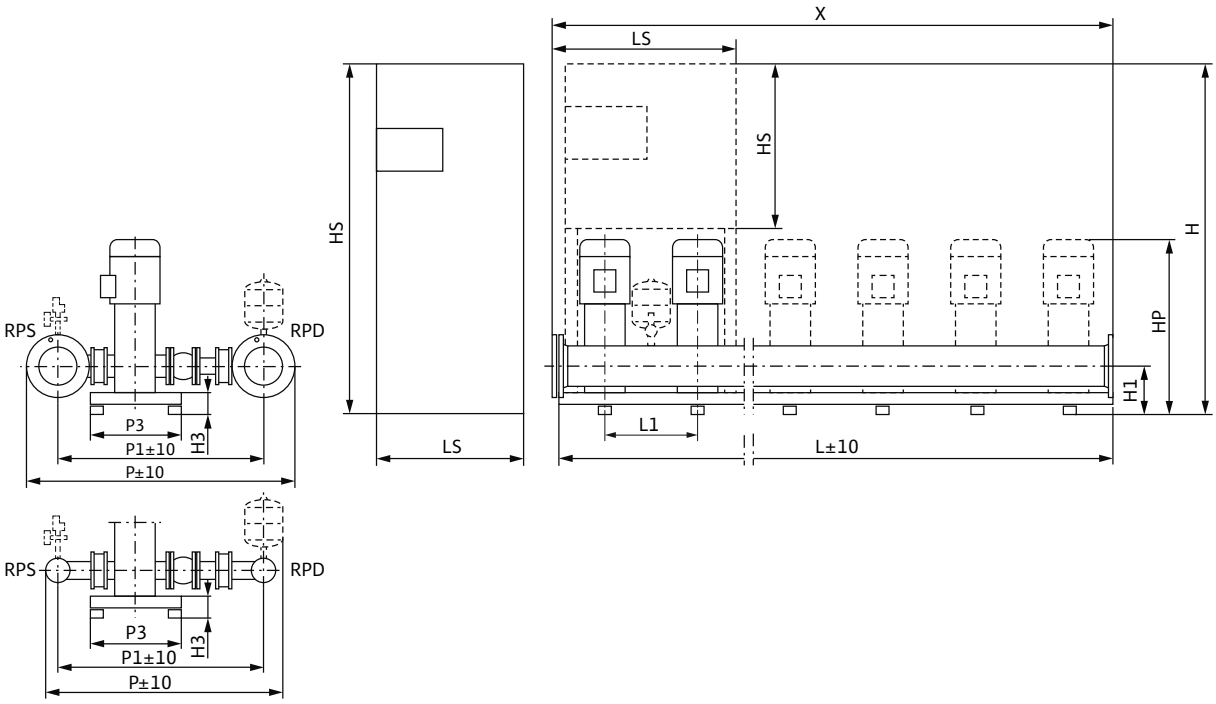

Sample systems are shown. Switchbox position depends on pump height.
Accessories (to be ordered separately): Optional WMS low-water cut-out switchgear kit
Installation surface: flat and horizontal
Installation location: dry, well ventilated and frost-proof

Dimensions, weights

Wilo-Comfort CO(R)- 4...	Nominal diameters of the pipe connections on suction side	Nominal diameters of pipe connections on the pressure side	Dimensions																Weight approx.	
											CO	COR	CO	COR	CO	COR	CO	COR	CO	COR
	RPS	*RPD*	*H1*	*H3*	*HP*	*L1*	*P*	*P1*	*P3*	*X*	*H*		*HS*		*L*		*LS*		*m*	
			mm																kg	
MVI 9501/1/CC	DN 250	DN 250	268	128	1061	500	1695	1300	650	2000	1900	1900	1900	1900	2000	2000	600	800	1178	1203
MVI 9501/CC	DN 250	DN 250	268	128	1096	500	1695	1300	650	2000	1900	1900	1900	1900	2000	2000	600	1000	1272	1334
MVI 9501N/CC	DN 250	DN 250	268	128	1289	500	1695	1300	650	2000	1900	1900	1900	1900	2000	2000	600	1000	1352	1414
MVI 9502/2/CC	DN 250	DN 250	268	128	1387	500	1695	1300	650	2000	1900	1900	1900	1900	2000	2000	600	1000	1459	1523
MVI 9502/1/CC	DN 250	DN 250	268	128	1387	500	1695	1300	650	2000	1900	1900	1900	1900	2000	2000	600	1000	1459	1523
MVI 9502/CC	DN 250	DN 250	268	128	1406	500	1695	1300	650	2000	1900	1900	1900	1900	2000	2000	600	1000	1559	1639
MVI 9503/2/CC	DN 250	DN 250	268	128	1528	500	1695	1300	650	2000	1900	1900	1900	1900	2000	2000	600	1000	1669	1749
MVI 9503/1/CC	DN 250	DN 250	268	128	1608	500	1695	1300	650	2000	1900	1900	1900	1900	2000	2000	800	1200	2044	2147
MVI 9503/CC	DN 250	DN 250	268	128	1608	500	1695	1300	650	2000	1900	1900	1900	1900	2000	2000	800	1200	2044	2147
MVI 9504/2/CC	DN 250	DN 250	268	128	1706	500	1695	1300	650	2000	1900	1900	1900	1900	2000	2000	800	1200	2064	2167
MVI 9504/1/CC	DN 250	DN 250	268	128	1728	500	1695	1300	650	2000	1900	1900	1900	1900	2000	2000	800	1800	2167	2272
MVI 9504/CC	DN 250	DN 250	268	128	1728	500	1695	1300	650	2000	1900	1900	1900	1900	2000	2000	800	1800	2167	2272

Technical data Wilo-Comfort CO-/COR-MVI.../CC

Pump curves

Wilo-Comfort CO(R)-5 MVI 9501-9504/CC

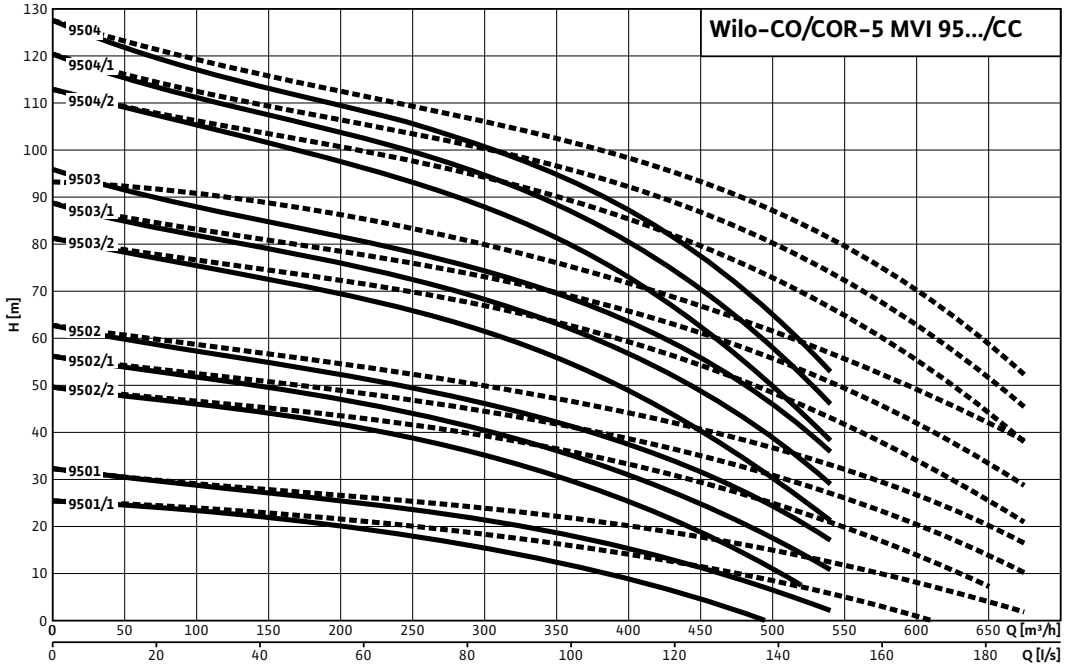

---- including standby pump

Motor data

Wilo-Comfort CO(R)- 5...	Nominal motor power	Nominal current 3~400 V, 50 Hz	Motor efficiency		
	P_2	I_N	$\eta_{m\ 50\%}$	$\eta_{m\ 75\%}$	$\eta_{m\ 100\%}$
	kW	A	%		
MVI 9501/1/CC	7.5	14	88.5	89.9	89.5
MVI 9501/CC	9	16.3	86.6	88.4	88.8
MVI 9501N/CC	9	16.3	86.6	88.4	88.8
MVI 9502/2/CC	15	25.7	88.4	90.2	90.3
MVI 9502/1/CC	15	25.7	88.4	90.2	90.3
MVI 9502/CC	18.5	31.4	89.0	90.8	90.9
MVI 9503/2/CC	22	37.5	89.5	90.9	91.3
MVI 9503/1/CC	30	55.1	90.3	91.8	92.0
MVI 9503/CC	30	55.1	90.3	91.8	92.0
MVI 9504/2/CC	30	55.1	90.3	91.8	92.0
MVI 9504/1/CC	37	70	90.1	91.9	92.5
MVI 9504/CC	37	70	90.1	91.9	92.5

Motor efficiency based on 400 V, 50 Hz

Technical data Wilo-Comfort CO-/COR-MVI.../CC

Dimension drawing

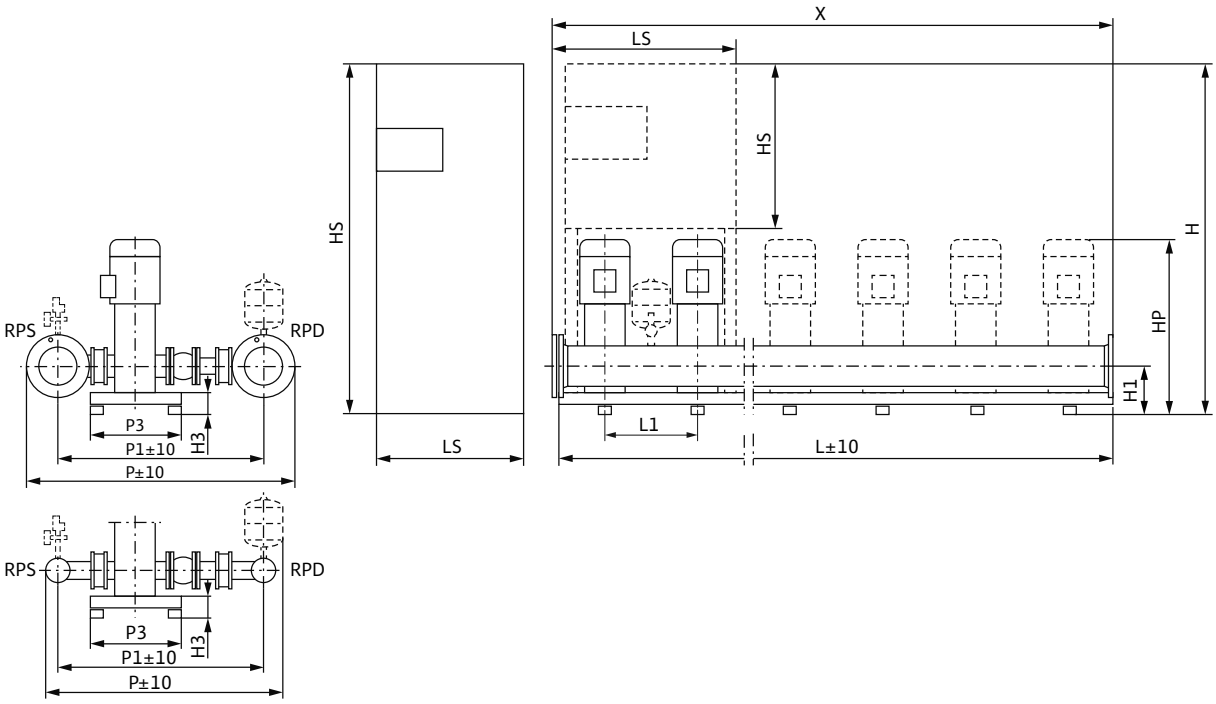

Sample systems are shown. Switchbox position depends on pump height.
Accessories (to be ordered separately): Optional WMS low-water cut-out switchgear kit
Installation surface: flat and horizontal
Installation location: dry, well ventilated and frost-proof

Dimensions, weights

Wilo-Comfort CO(R)- 5...	Nominal diameters of the pipe connections on suction side	Nominal diameters of pipe connections on the pressure side	Dimensions																Weight approx.	
											CO	COR	CO	COR	CO	COR	CO	COR	CO	COR
	RPS	*RPD*	*H1*	*H3*	*HP*	*L1*	*P*	*P1*	*P3*	*X*	*H*		*HS*		*L*		*LS*		*m*	
			mm																kg	
MVI 9501/1/CC	DN 250	DN 250	268	128	1061	500	1695	1300	650	2500	1900	1900	1900	1900	2500	2500	800	1000	1425	1450
MVI 9501/CC	DN 250	DN 250	268	128	1096	500	1695	1300	650	2500	1900	1900	1900	1900	2500	2500	800	1000	1509	1572
MVI 9501N/CC	DN 250	DN 250	268	128	1289	500	1695	1300	650	2500	1900	1900	1900	1900	2500	2500	800	1000	1609	1672
MVI 9502/2/CC	DN 250	DN 250	268	128	1387	500	1695	1300	650	2500	1900	1900	1900	1900	2500	2500	800	1200	1743	1807
MVI 9502/1/CC	DN 250	DN 250	268	128	1387	500	1695	1300	650	2500	1900	1900	1900	1900	2500	2500	800	1200	1743	1807
MVI 9502/CC	DN 250	DN 250	268	128	1406	500	1695	1300	650	2500	1900	1900	1900	1900	2500	2500	800	1800	2022	2102
MVI 9503/2/CC	DN 250	DN 250	268	128	1528	500	1695	1300	650	2500	1900	1900	1900	1900	2500	2500	800	1800	2159	2239
MVI 9503/1/CC	DN 250	DN 250	268	128	1608	500	1695	1300	650	2500	1900	1900	1900	1900	2500	2500	1200	2000	2491	2594
MVI 9503/CC	DN 250	DN 250	268	128	1608	500	1695	1300	650	2500	1900	1900	1900	1900	2500	2500	1200	2000	2491	2594
MVI 9504/2/CC	DN 250	DN 250	268	128	1706	500	1695	1300	650	2500	1900	1900	1900	1900	2500	2500	1200	2000	2516	2619
MVI 9504/1/CC	DN 250	DN 250	268	128	1728	500	1695	1300	650	2500	1900	1900	1900	1900	2500	2500	1200	2000	2639	2744
MVI 9504/CC	DN 250	DN 250	268	128	1728	500	1695	1300	650	2500	1900	1900	1900	1900	2500	2500	1200	2000	2639	2744

Technical data Wilo-Comfort CO-/COR-MVI.../CC

Pump curves

Wilo-Comfort CO(R)-6 MVI 9501-9504/CC

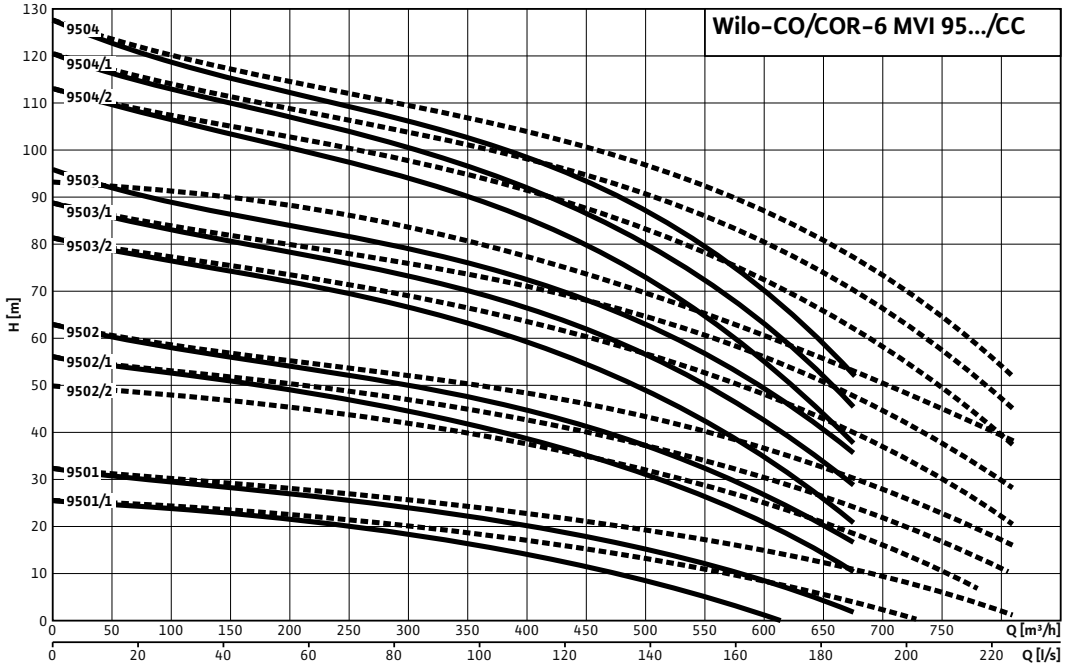

---- including standby pump

Motor data

Wilo-Comfort CO(R)- 6...	Nominal motor power	Nominal current 3~400 V, 50 Hz	Motor efficiency		
	P_2	I_N	$\eta_{m\ 50\%}$	$\eta_{m\ 75\%}$	$\eta_{m\ 100\%}$
	kW	A	%		
MVI 9501/1/CC	7.5	14	88.5	89.9	89.5
MVI 9501/CC	9	16.3	86.6	88.4	88.8
MVI 9501N/CC	9	16.3	86.6	88.4	88.8
MVI 9502/2/CC	15	25.7	88.4	90.2	90.3
MVI 9502/1/CC	15	25.7	88.4	90.2	90.3
MVI 9502/CC	18.5	31.4	89.0	90.8	90.9
MVI 9503/2/CC	22	37.5	89.5	90.9	91.3
MVI 9503/1/CC	30	55.1	90.3	91.8	92.0
MVI 9503/CC	30	55.1	90.3	91.8	92.0
MVI 9504/2/CC	30	55.1	90.3	91.8	92.0
MVI 9504/1/CC	37	70	90.1	91.9	92.5
MVI 9504/CC	37	70	90.1	91.9	92.5

Motor efficiency based on 400 V, 50 Hz

Technical data Wilo-Comfort CO-/COR-MVI.../CC

Dimension drawing

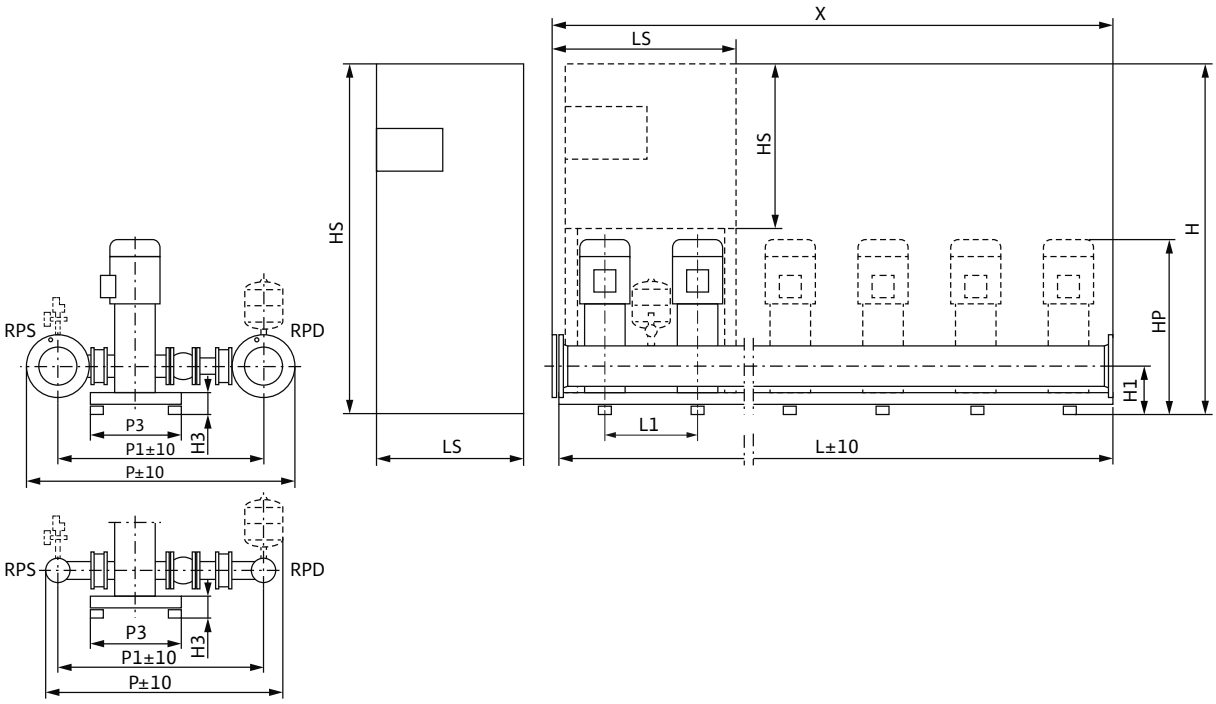

Sample systems are shown. Switchbox position depends on pump height.
Accessories (to be ordered separately): Optional WMS low-water cut-out switchgear kit
Installation surface: flat and horizontal
Installation location: dry, well ventilated and frost-proof

Dimensions, weights

Wilo-Comfort CO(R)- 6...	Nominal diameters of the pipe connections on suction side	Nominal diameters of pipe connections on the pressure side	Dimensions																Weight approx.	
											CO	COR	CO	COR	CO	COR	CO	COR	CO	COR
	RPS	*RPD*	*H1*	*H3*	*HP*	*L1*	*P*	*P1*	*P3*	*X*	*H*		*HS*		*L*		*LS*		*m*	
			mm																kg	
MVI 9501/1/CC	DN 250	DN 250	268	128	1061	500	1695	1300	650	3000	1900	1900	1900	1900	3000	3000	800	1000	1683	1708
MVI 9501/CC	DN 250	DN 250	268	128	1096	500	1695	1300	650	3000	1900	1900	1900	1900	3000	3000	800	1000	1747	1810
MVI 9501N/CC	DN 250	DN 250	268	128	1289	500	1695	1300	650	3000	1900	1900	1900	1900	3000	3000	800	1000	1867	1930
MVI 9502/2/CC	DN 250	DN 250	268	128	1387	500	1695	1300	650	3000	1900	1900	1900	1900	3000	3000	800	1200	2026	2090
MVI 9502/1/CC	DN 250	DN 250	268	128	1387	500	1695	1300	650	3000	1900	1900	1900	1900	3000	3000	800	1200	2026	2090
MVI 9502/CC	DN 250	DN 250	268	128	1406	500	1695	1300	650	3000	1900	1900	1900	1900	3000	3000	800	1800	2315	2395
MVI 9503/2/CC	DN 250	DN 250	268	128	1528	500	1695	1300	650	3000	1900	1900	1900	1900	3000	3000	800	1800	2480	2560
MVI 9503/1/CC	DN 250	DN 250	268	128	1608	500	1695	1300	650	3000	1900	1900	1900	1900	3000	3000	1200	2000	2859	2962
MVI 9503/CC	DN 250	DN 250	268	128	1608	500	1695	1300	650	3000	1900	1900	1900	1900	3000	3000	1200	2000	2859	2962
MVI 9504/2/CC	DN 250	DN 250	268	128	1706	500	1695	1300	650	3000	1900	1900	1900	1900	3000	3000	1200	2000	2889	2992
MVI 9504/1/CC	DN 250	DN 250	268	128	1728	500	1695	1300	650	3000	1900	1900	1900	1900	3000	3000	1200	2000	3036	3141
MVI 9504/CC	DN 250	DN 250	268	128	1728	500	1695	1300	650	3000	1900	1900	1900	1900	3000	3000	1200	2000	3036	3141

Pressure boosting

Multi-pump systems with fixed speed or speed-controlled base-load pump

Series description Wilo-Comfort-N-CO-/COR-MVIS.../CC

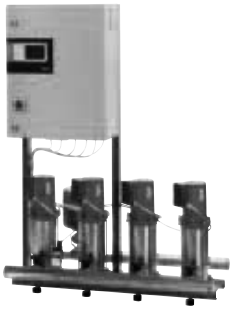

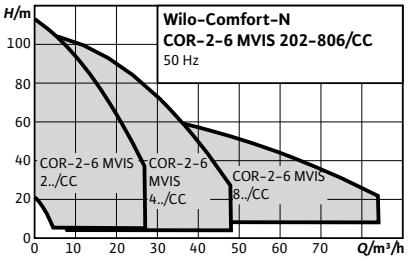

Design

Pressure boosting system with 2 to 6 parallel-switched, non-self-priming stainless steel high-pressure multistage centrifugal pumps with glandless pump motor

Type key

Example:	**Wilo-COR-4 MVIS 804/CC**
CO	Compact pressure boosting system
R	Control of the respective base-load pump via frequency converter
4	Number of pumps
MVIS	Pump series
8	Rated volume flow of the single pump [m^3/h]
04	Number of single-pump stages
CC	Control unit; CC = Comfort-Controller

Application

- Fully automatic water supply and pressure boosting in residential, commercial and public buildings, hotels, hospitals, department stores and for industrial systems.
- Pumping of potable water and process water, cooling water, water for fire-fighting or other water mixtures that do not chemically or mechanically attack the materials used and do not contain abrasive or long-fibre constituents

Special features/product advantages

- Easy-to-use system in compliance with all requirements outlined in DIN 1988
- 2-6 vertical MVIS series full-stainless-steel high-pressure multistage centrifugal pumps switched in parallel
- Virtually noiseless system due to glandless MVIS series stainless-steel high-pressure multistage centrifugal pumps
- Up to 20 dB[A] quieter than conventional systems with comparable hydraulic output
- Customised units on request

Technical data

- Mains connection 3~230/400 V ± 10%, 50 Hz (other versions on request)
- Max. fluid temperature 50 °C
- Max. ambient temperature 40 °C
- Operating pressure 16 bar
- Inlet pressure 6 bar
- Nominal connection diameters on discharge side Rp 2" - Rp 3"
- Nominal connection diameters on inlet side Rp 2" - Rp 3"
- Nominal speed 2750 rpm
- Protection class IP 44
- Fuse protection on mains side [AC 3] according to motor power and EVU regulations
- Approved fluids (other fluids on request):
  - Potable water and secondary hot water
  - Cooling water
  - Fire water
- Note on fluids: Approved fluids are generally waters which do not attack the materials used, neither chemically nor mechanically, and do not contain any abrasive or long-fibre constituents.

Equipment/function

- 2-6 pumps per system
- Automatic pump control via CC Controller
- Components that come in contact with fluid are corrosion-resistant
- Galvanised base frame with height-adjustable vibration absorber for insulation against structure-borne noise
- Gear-operated shut-off ball cock/annular shut-off valve on every pump, on the suction and pressure side
- Non-return valve, pressure side
- Diaphragm pressure vessel 8 l, PN16, pressure side
- Pressure sensor, discharge side
- Optional pressure gauge (suction side)
- Pressure gauge (discharge side)
- Optional low-water cut-out switchgear

Materials

- Impellers 1.4301 stainless steel
- Stage chambers 1.4301 stainless steel
- Pump housing 1.4301 stainless steel
- Shaft 1.4122 stainless steel
- Seal EPDM (EP 851)
- Lower housing section stainless steel 1.4301
- Pressure shroud 1.4301 stainless steel
- Bearing carbon, synthetic resin impregnated
- Pump base EN-GJL-250
- Pipework made of 1.4571 stainless steel

Series description Wilo-Comfort-N-CO-/COR-MVIS.../CC

Description/design

- Base frame: galvanised and provided with height-adjustable vibration absorbers for comprehensive insulation against structure-borne noise; other versions on request
- Pipework: complete pipework made of stainless steel, suitable for the connection of all piping materials used in building services; the pipework is dimensioned according to the overall hydraulic performance of the pressure boosting system
- Pumps: 2 to 6 parallel-switched pumps from the MVIS 2.., MVIS 4.. and MVIS 8.. series are used; all pump components in contact with fluid are made of stainless steel
- Valves: each pump is fitted on the suction and pressure side with a check valve with DVGW approval mark and a pressure-side DVGW-approved non-return valve
- Diaphragm pressure vessel: 8 l/PN 16 located on the discharge side with a butyl rubber diaphragm, completely safe in accordance with food safety laws, for testing and inspection purposes, with shut-off ball cock, with drain and throughflow fitting according to DIN 4807
- Pressure sensor: 4 to 20 mA, located on the discharge side for activating the central Comfort-Controller
- Pressure display: suction- and discharge-side pressure gauge (ø 63 mm); additional digital display of discharge pressure in the touchscreen of the Comfort-Controller
- Switchgear/controller: the system is equipped with a Comfort-Controller CC as standard; on COR systems, it is fitted with a frequency converter for speed control of the base-load pump

Scope of delivery

- Factory-mounted, connection-ready pressure boosting system checked for functionality and impermeability
- Packaging
- Installation and operating instructions

Terminal diagram

CC system, direct starting

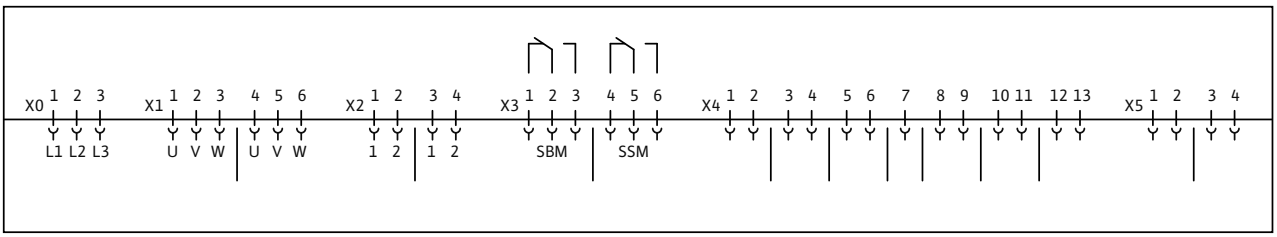

x0: Mains connection
x1: Power supply, pumps
- 1-3, pump 1
- 4-6, pump 2

x2: Thermal winding contact/PTC connection
- 1-2. pump 1
- 3-4, pump 2
- etc.

x3: Potential-free contacts
- 1-3, SBM (collective run signal)
- 4-6, SSM (collective fault signal)

x4: Sensor connections
- 1-2. external On/Off
- 3-4, dry-running protection
- 5, sensor (+); 6, sensor (In)
- 7, GND
- 8, analogue In (+); 9, analogue In (In)
- 10-11, setpoint 2
- 12-13, setpoint 3

x5: Analogue outputs
- 1-2. actual pressure (0...10 V)
- 3-4, actual frequency (0...10 V)

Technical data Wilo-Comfort-N-CO-/COR-MVIS.../CC

Pump curves

Wilo-Comfort-N-CO(R)-2 MVIS 202-210/CC

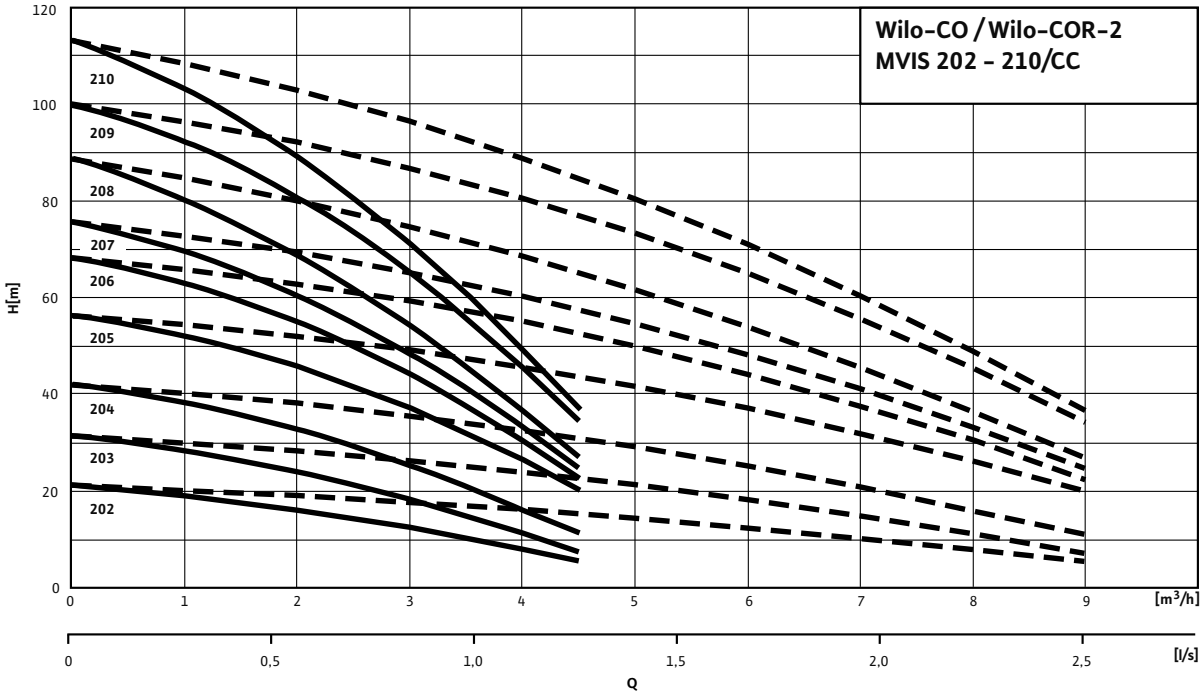

---- including standby pump

Motor data				
Wilo-Comfort-N-CO(R)- 2 MVIS...	**Power consumption**	**Nominal motor power**	**Nominal current 3~230 V, 50 Hz**	**Nominal current 3~400 V, 50 Hz**
	P_1	P_2	I_N	
	kW		A	
202/CC	0.51	0.35	2.1	1.2
203/CC	0.72	0.45	2.6	1.5
204/CC	0.88	0.45	3	1.7
205/CC	1.2	1.1	4.5	2.6
206/CC	1.38	1.1	4.9	2.8
207/CC	1.53	1.1	5.2	3
208/CC	1.69	1.1	5.6	3.2
209/CC	2.14	2.2	8	4.6
210/CC	2.33	2.2	8.5	4.9

Technical data Wilo-Comfort-N-CO-/COR-MVIS.../CC

Dimension drawing

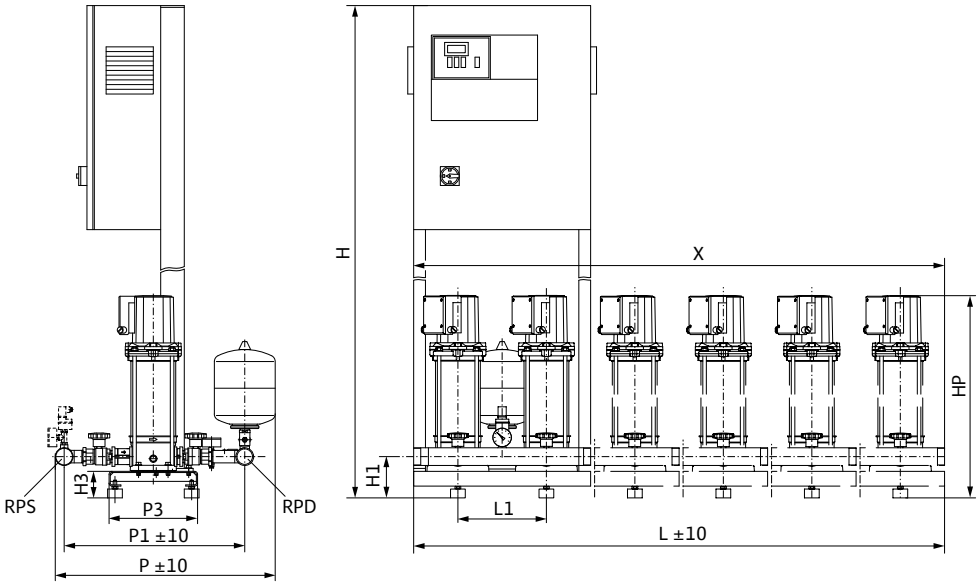

Sample systems are shown. Switchbox position depends on pump height.
Accessories (to be ordered separately): Optional WMS low-water cut-out switchgear kit
Installation surface: flat and horizontal
Installation location: dry, well ventilated and frost-proof

Dimensions, weights

Wilo-Comfort-N-CO(R)- 2 MVIS...	Nominal diameters of the pipe connections on suction side	Nominal diameters of pipe connections on the pressure side	Dimensions										Weight approx.	
													CO	COR
	RPS	*RPD*	*H*	*H1*	*H3*	*HP*	*L*	*L1*	*P*	*P1*	*P3*	*X*	*m*	
			mm										kg	
MVIS 202/CC	R 2	R 2	1670	140	90	444	600	300	750	613	300	600	110	118
MVIS 203/CC	R 2	R 2	1670	140	90	468	600	300	750	613	300	600	112	120
MVIS 204/CC	R 2	R 2	1670	140	90	492	600	300	750	613	300	600	113	121
MVIS 205/CC	R 2	R 2	1670	140	90	536	600	300	750	613	300	600	124	131
MVIS 206/CC	R 2	R 2	1670	140	90	560	600	300	750	613	300	600	125	132
MVIS 207/CC	R 2	R 2	1670	140	90	584	600	300	750	613	300	600	126	133
MVIS 208/CC	R 2	R 2	1670	140	90	608	600	300	750	613	300	600	128	135
MVIS 209/CC	R 2	R 2	1670	140	90	662	600	300	750	613	300	600	133	140
MVIS 210/CC	R 2	R 2	1670	140	90	686	600	300	750	613	300	600	138	145

Technical data Wilo-Comfort-N-CO-/COR-MVIS.../CC

Pump curves

Wilo-Comfort-N-CO(R)-2 MVIS 402-410/CC

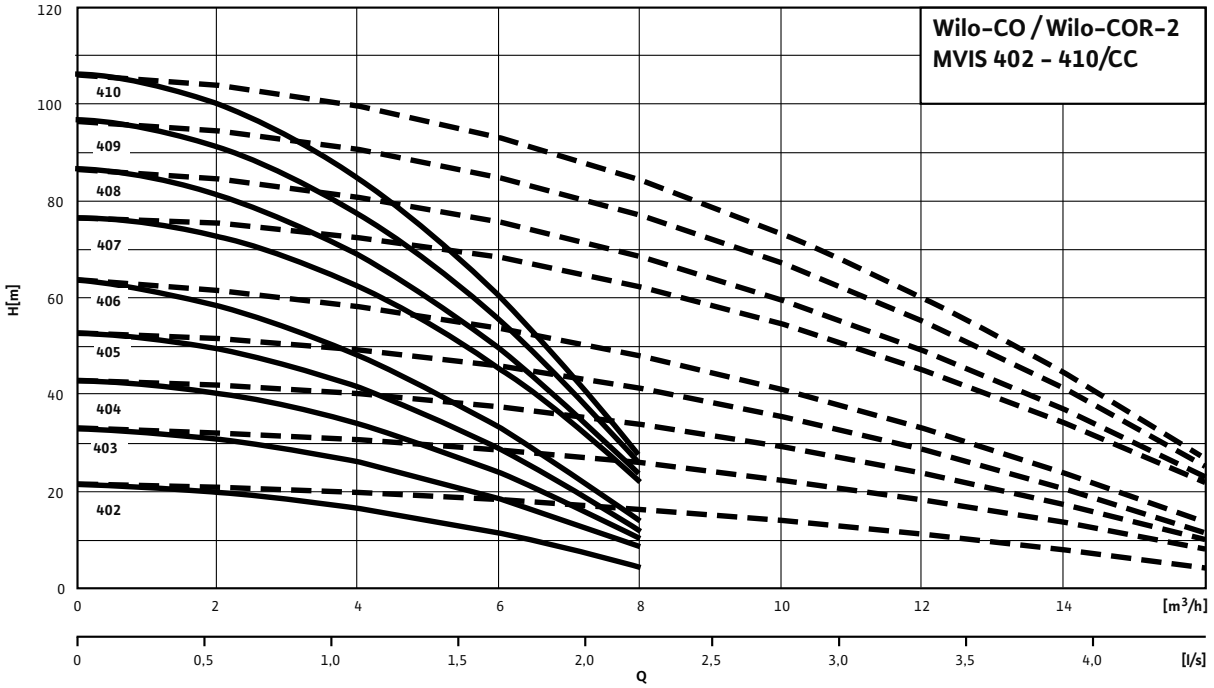

---- including standby pump

Motor data

Wilo-Comfort-N-CO(R)- 2 MVIS...	Power consumption	Nominal motor power	Nominal current 3~230 V, 50 Hz	Nominal current 3~400 V, 50 Hz
	P_1	P_2	I_N	
	kW		A	
402/CC	0.69	0.45	2.6	1.5
403/CC	1.02	1.1	4.2	2.4
404/CC	1.26	1.1	4.5	2.6
405/CC	1.48	1.1	5.2	3
406/CC	1.7	1.1	5.6	3.2
407/CC	2.2	2.2	8	4.6
408/CC	2.4	2.2	8.5	4.9
409/CC	2.69	2.2	9.2	5.3
410/CC	2.94	2.2	9.7	5.6

Technical data Wilo-Comfort-N-CO-/COR-MVIS.../CC

Dimension drawing

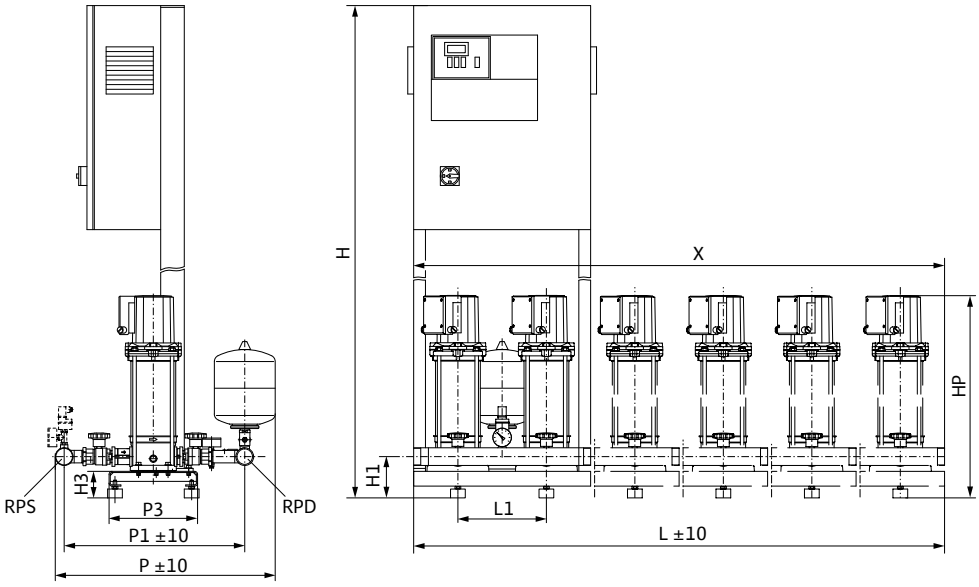

Sample systems are shown. Switchbox position depends on pump height.
Accessories (to be ordered separately): Optional WMS low-water cut-out switchgear kit
Installation surface: flat and horizontal
Installation location: dry, well ventilated and frost-proof

Dimensions, weights

Wilo-Comfort-N-CO(R)- 2 MVIS...	Nominal diameters of the pipe connections on suction side	Nominal diameters of the pipe connections on the pressure side	Dimensions										Weight approx.	
													CO	COR
	RPS	*RPD*	*H*	*H1*	*H3*	*HP*	*L*	*L1*	*P*	*P1*	*P3*	*X*	*m*	
			mm										kg	
MVIS 402/CC	Rp 2	Rp 2	1670	140	90	444	600	300	750	613	300	600	113	121
MVIS 403/CC	Rp 2	Rp 2	1670	140	90	488	600	300	750	613	300	600	123	130
MVIS 404/CC	Rp 2	Rp 2	1670	140	90	512	600	300	750	613	300	600	124	131
MVIS 405/CC	Rp 2	Rp 2	1670	140	90	536	600	300	750	613	300	600	125	132
MVIS 406/CC	Rp 2	Rp 2	1670	140	90	560	600	300	750	613	300	600	126	133
MVIS 407/CC	Rp 2	Rp 2	1670	140	90	614	600	300	750	613	300	600	136	143
MVIS 408/CC	Rp 2	Rp 2	1670	140	90	638	600	300	750	613	300	600	137	144
MVIS 409/CC	Rp 2	Rp 2	1670	140	90	662	600	300	750	613	300	600	138	145
MVIS 410/CC	Rp 2	Rp 2	1670	140	90	686	600	300	750	613	300	600	139	146

Technical data Wilo-Comfort-N-CO-/COR-MVIS.../CC

Pump curves

Wilo-Comfort-N-CO(R)-2 MVIS 802-806/CC

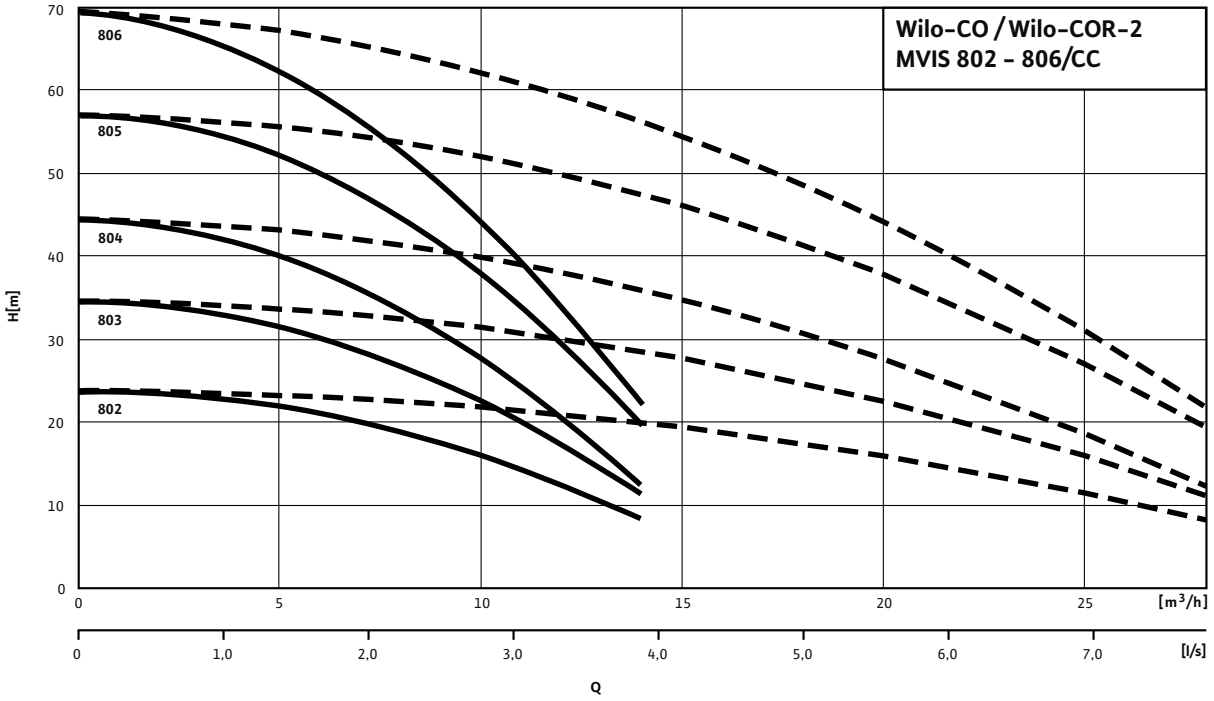

---- including standby pump

Motor data				
Wilo-Comfort-N-CO(R)- 2 MVIS...	**Power consumption**	**Nominal motor power**	**Nominal current 3~230 V, 50 Hz**	**Nominal current 3~400 V, 50 Hz**
	P_1	P_2	I_N	
	kW		A	
802/CC	1.25	1.1	4.5	2.6
803/CC	1.6	1.1	5.4	3.1
804/CC	1.95	1.1	6.3	3.6
805/CC	2.67	2.2	9.2	5.3
806/CC	2.98	2.2	9.7	5.6

Technical data Wilo-Comfort-N-CO-/COR-MVIS.../CC

Dimension drawing

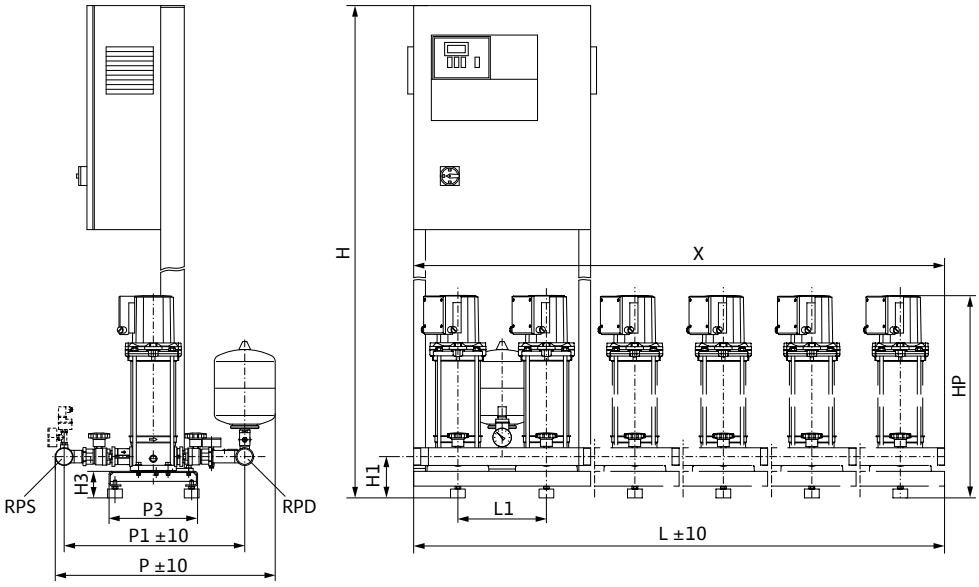

Sample systems are shown. Switchbox position depends on pump height.
Accessories (to be ordered separately): Optional WMS low-water cut-out switchgear kit
Installation surface: flat and horizontal
Installation location: dry, well ventilated and frost-proof

Dimensions, weights

Wilo-Comfort-N-CO(R)- 2 MVIS...	Nominal diameters of the pipe connections on suction side	Nominal diameters of pipe connections on the pressure side	Dimensions										Weight approx.	
													CO	COR
	RPS	*RPD*	*H*	*H1*	*H3*	*HP*	*L*	*L1*	*P*	*P1*	*P3*	*X*	*m*	
			mm										kg	
MVIS 802/CC	Rp 2½	Rp 2½	1670	170	90	515	600	300	825	684	450	600	144	151
MVIS 803/CC	Rp 2½	Rp 2½	1670	170	90	545	600	300	825	684	450	600	145	152
MVIS 804/CC	Rp 2½	Rp 2½	1670	170	90	575	600	300	825	684	450	600	154	161
MVIS 805/CC	Rp 2½	Rp 2½	1670	170	90	635	600	300	825	684	450	600	165	172
MVIS 806/CC	Rp 2½	Rp 2½	1670	170	90	665	600	300	825	684	450	600	166	173

Technical data Wilo-Comfort-N-CO-/COR-MVIS.../CC

Pump curves

Wilo-Comfort-N-CO(R)-3 MVIS 202-210/CC

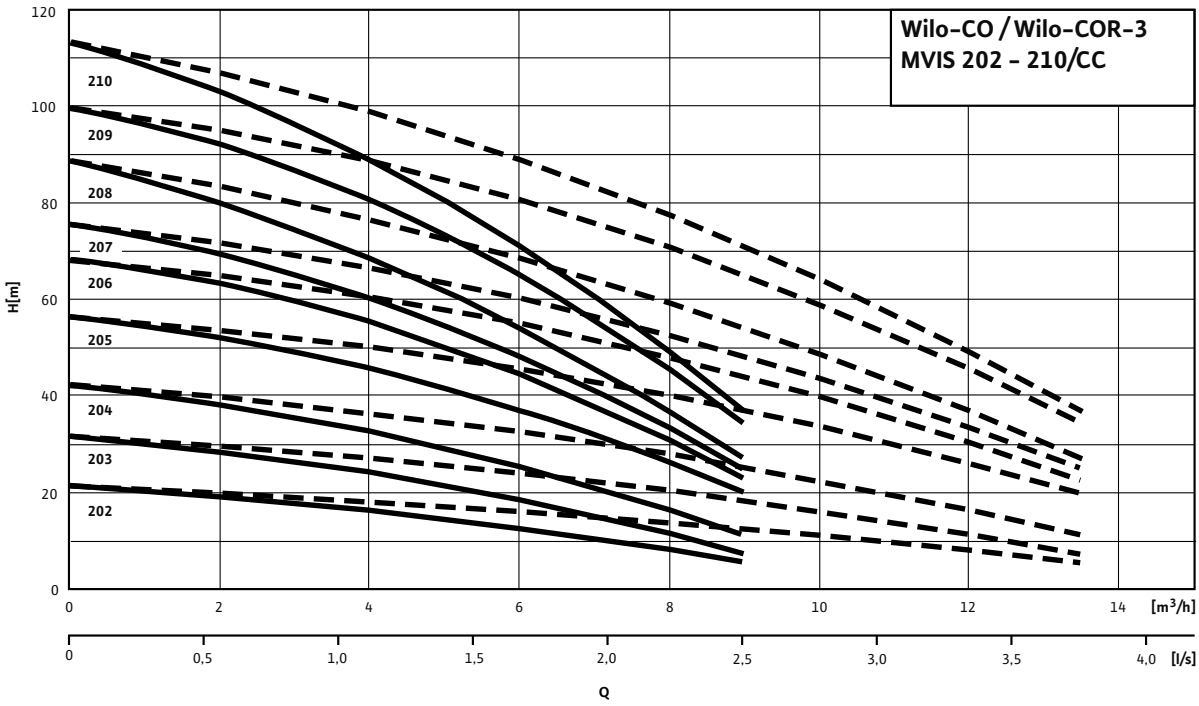

---- including standby pump

Motor data

Wilo-Comfort-N-CO(R)- 3 MVIS...	Power consumption	Nominal motor power	Nominal current 3~230 V, 50 Hz	Nominal current 3~400 V, 50 Hz
	P_1	P_2	I_N	
	kW		A	
202/CC	0.51	0.35	2.1	1.2
203/CC	0.72	0.45	2.6	1.5
204/CC	0.88	0.45	3	1.7
205/CC	1.2	1.1	4.5	2.6
206/CC	1.38	1.1	4.9	2.8
207/CC	1.53	1.1	5.2	3
208/CC	1.69	1.1	5.6	3.2
209/CC	2.14	2.2	8	4.6
210/CC	2.33	2.2	8.5	4.9

Technical data Wilo-Comfort-N-CO-/COR-MVIS.../CC

Dimension drawing

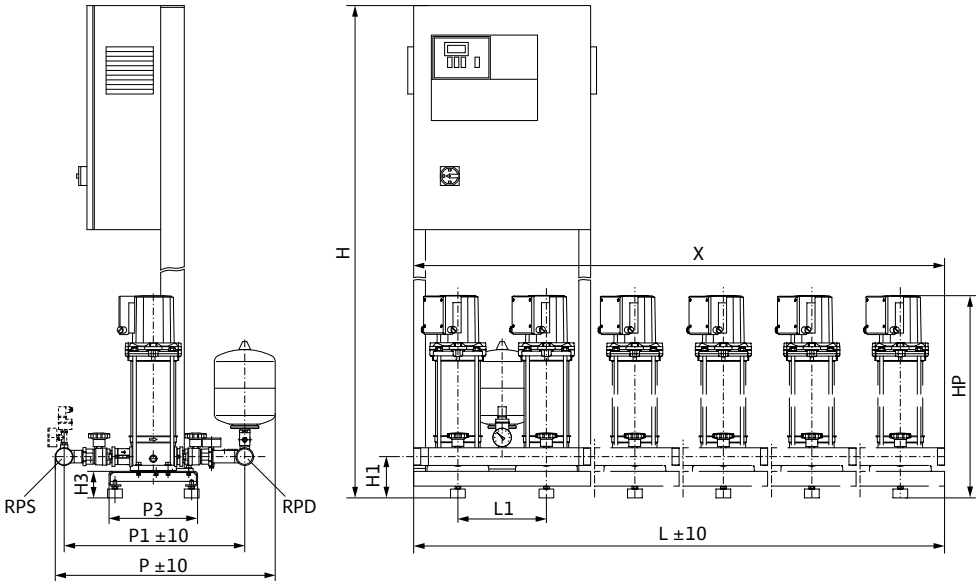

Sample systems are shown. Switchbox position depends on pump height.
Accessories (to be ordered separately): Optional WMS low-water cut-out switchgear kit
Installation surface: flat and horizontal
Installation location: dry, well ventilated and frost-proof

Dimensions, weights

Wilo-Comfort-N-CO(R)- 3 MVIS...	Nominal diameters of the pipe connections on suction side	Nominal diameters of the pipe connections on the pressure side	Dimensions										Weight approx.	
													CO	COR
	RPS	*RPD*	*H*	*H1*	*H3*	*HP*	*L*	*L1*	*P*	*P1*	*P3*	*X*	*m*	
			mm										kg	
MVIS 202/CC	R 2	R 2	1670	140	90	444	900	300	750	613	300	900	138	145
MVIS 203/CC	R 2	R 2	1670	140	90	468	900	300	750	613	300	900	141	148
MVIS 204/CC	R 2	R 2	1670	140	90	492	900	300	750	613	300	900	143	150
MVIS 205/CC	R 2	R 2	1670	140	90	536	900	300	750	613	300	900	158	165
MVIS 206/CC	R 2	R 2	1670	140	90	560	900	300	750	613	300	900	159	166
MVIS 207/CC	R 2	R 2	1670	140	90	584	900	300	750	613	300	900	161	168
MVIS 208/CC	R 2	R 2	1670	140	90	608	900	300	750	613	300	900	163	170
MVIS 209/CC	R 2	R 2	1670	140	90	662	900	300	750	613	300	900	165	172
MVIS 210/CC	R 2	R 2	1670	140	90	686	900	300	750	613	300	900	170	177

Technical data Wilo-Comfort-N-CO-/COR-MVIS.../CC

Pump curves

Wilo-Comfort-N-CO(R)-3 MVIS 402-410/CC

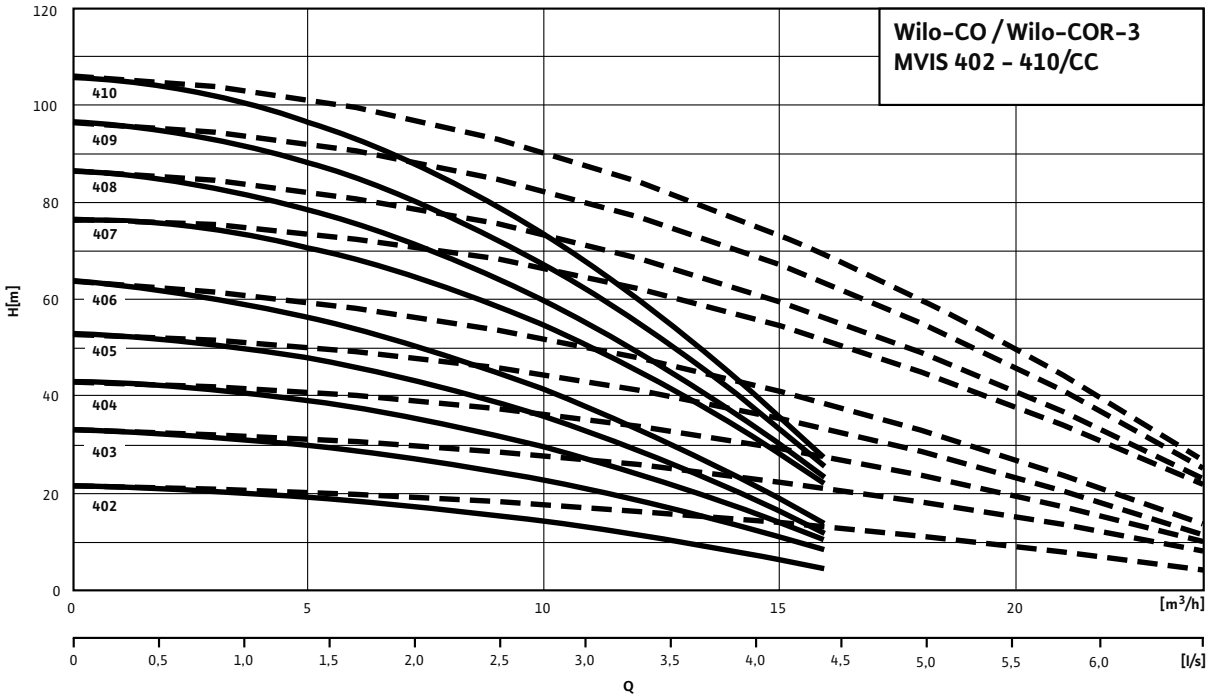

---- including standby pump

Motor data				
Wilo-Comfort-N-CO(R)- 3 MVIS...	**Power consumption**	**Nominal motor power**	**Nominal current 3~230 V, 50 Hz**	**Nominal current 3~400 V, 50 Hz**
	P_1	P_2	I_N	
	kW		A	
402/CC	0.69	0.45	2.6	1.5
403/CC	1.02	1.1	4.2	2.4
404/CC	1.26	1.1	4.5	2.6
405/CC	1.48	1.1	5.2	3
406/CC	1.7	1.1	5.6	3.2
407/CC	2.2	2.2	8	4.6
408/CC	2.4	2.2	8.5	4.9
409/CC	2.69	2.2	9.2	5.3
410/CC	2.94	2.2	9.7	5.6

Technical data Wilo-Comfort-N-CO-/COR-MVIS.../CC

Dimension drawing

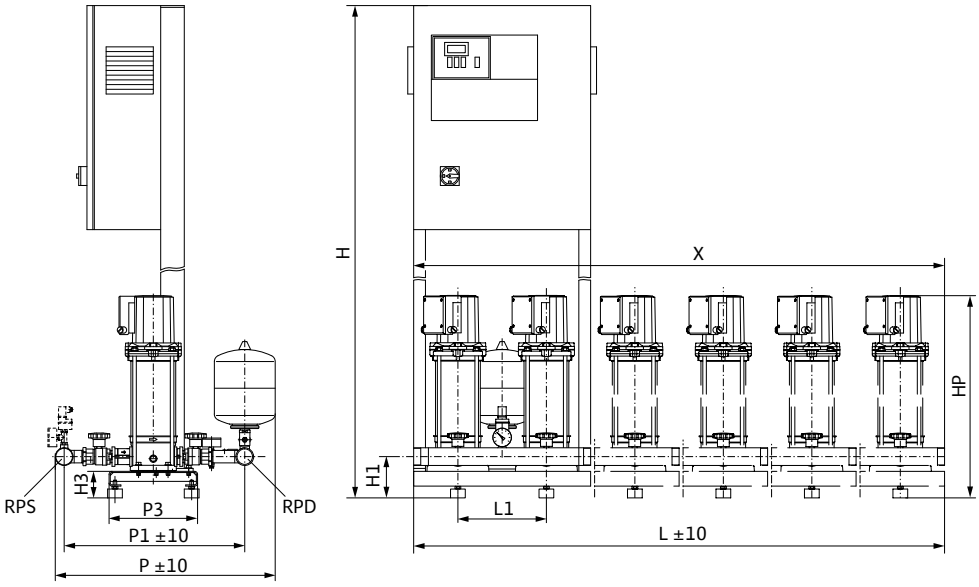

Sample systems are shown. Switchbox position depends on pump height.
Accessories (to be ordered separately): Optional WMS low-water cut-out switchgear kit
Installation surface: flat and horizontal
Installation location: dry, well ventilated and frost-proof

Dimensions, weights

Wilo-Comfort-N-CO(R)- 3 MVIS...	Nominal diameters of the pipe connections on suction side	Nominal diameters of pipe connections on the pressure side	Dimensions										Weight approx.	
													CO	COR
	RPS	*RPD*	*H*	*H1*	*H3*	*HP*	*L*	*L1*	*P*	*P1*	*P3*	*X*	*m*	
			mm										kg	
MVIS 402/CC	Rp 2	Rp 2	1670	140	90	444	900	300	750	613	300	900	148	155
MVIS 403/CC	Rp 2	Rp 2	1670	140	90	488	900	300	750	613	300	900	163	170
MVIS 404/CC	Rp 2	Rp 2	1670	140	90	512	900	300	750	613	300	900	164	171
MVIS 405/CC	Rp 2	Rp 2	1670	140	90	536	900	300	750	613	300	900	166	173
MVIS 406/CC	Rp 2	Rp 2	1670	140	90	560	900	300	750	613	300	900	167	174
MVIS 407/CC	Rp 2	Rp 2	1670	140	90	614	900	300	750	613	300	900	183	190
MVIS 408/CC	Rp 2	Rp 2	1670	140	90	638	900	300	750	613	300	900	186	193
MVIS 409/CC	Rp 2	Rp 2	1670	140	90	662	900	300	750	613	300	900	188	194
MVIS 410/CC	Rp 2	Rp 2	1670	140	90	686	900	300	750	613	300	900	189	196

Technical data Wilo-Comfort-N-CO-/COR-MVIS.../CC

Pump curves

Wilo-Comfort-N-CO(R)-3 MVIS 802-806/CC

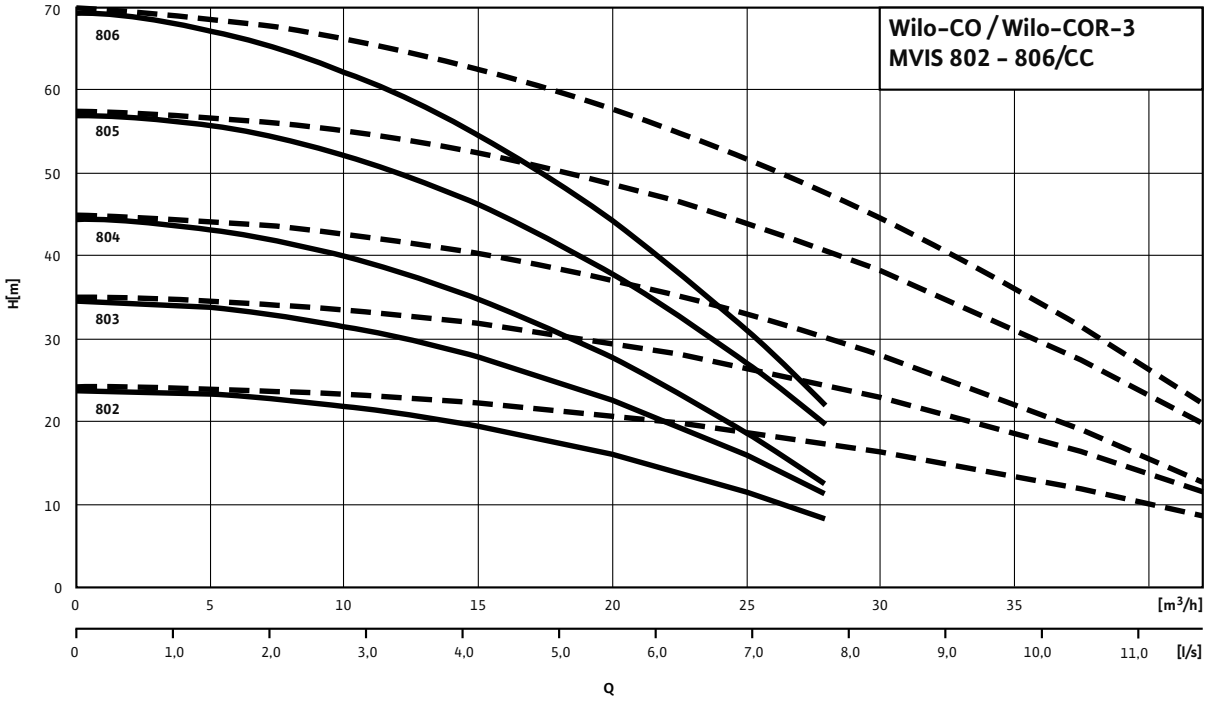

---- including standby pump

Motor data				
Wilo-Comfort-N-CO(R)- 3 MVIS...	**Power consumption**	**Nominal motor power**	**Nominal current 3~230 V, 50 Hz**	**Nominal current 3~400 V, 50 Hz**
	P_1	P_2	I_N	
	kW		A	
802/CC	1.25	1.1	4.5	2.6
803/CC	1.6	1.1	5.4	3.1
804/CC	1.95	1.1	6.3	3.6
805/CC	2.67	2.2	9.2	5.3
806/CC	2.98	2.2	9.7	5.6

Technical data Wilo-Comfort-N-CO-/COR-MVIS.../CC

Dimension drawing

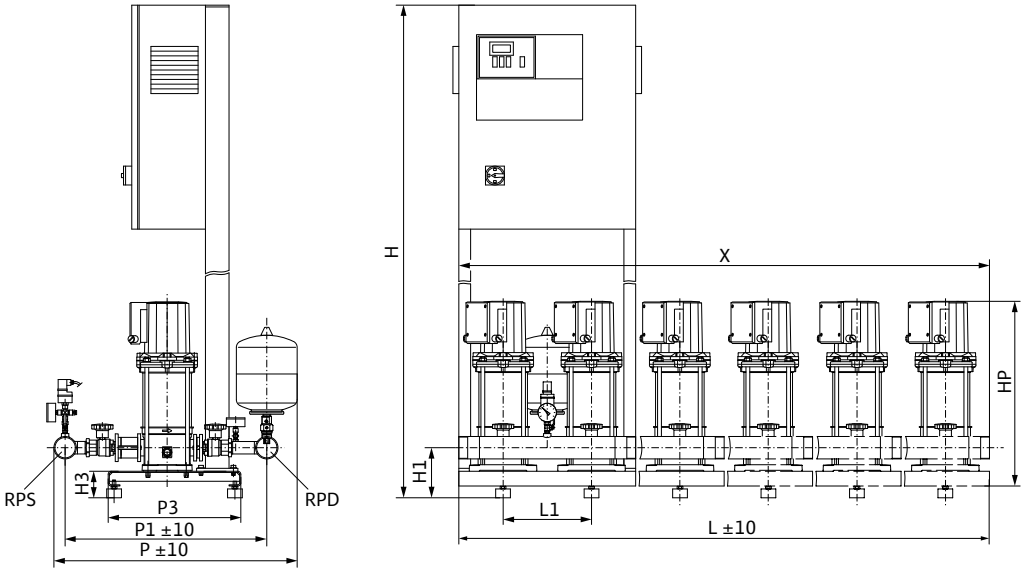

Sample systems are shown. Switchbox position depends on pump height.
Accessories (to be ordered separately): Optional WMS low-water cut-out switchgear kit
Installation surface: flat and horizontal
Installation location: dry, well ventilated and frost-proof

Dimensions, weights

Wilo-Comfort-N-CO(R)- 3 MVIS...	Nominal diameters of the pipe connections on suction side	Nominal diameters of pipe connections on the pressure side	Dimensions										Weight approx.	
													CO	COR
	RPS	*RPD*	*H*	*H1*	*H3*	*HP*	*L*	*L1*	*P*	*P1*	*P3*	*X*	*m*	
			mm										kg	
MVIS 802/CC	Rp 2½	Rp 2½	1670	170	90	515	900	300	825	684	450	900	200	208
MVIS 803/CC	Rp 2½	Rp 2½	1670	170	90	545	900	300	825	684	450	900	202	210
MVIS 804/CC	Rp 2½	Rp 2½	1670	170	90	575	900	300	825	684	450	900	204	214
MVIS 805/CC	Rp 2½	Rp 2½	1670	170	90	635	900	300	825	684	450	900	215	226
MVIS 806/CC	Rp 2½	Rp 2½	1670	170	90	665	900	300	825	684	450	900	216	228

Technical data Wilo-Comfort-N-CO-/COR-MVIS.../CC

Pump curves

Wilo-Comfort-N-CO(R)-4 MVIS 202-210/CC

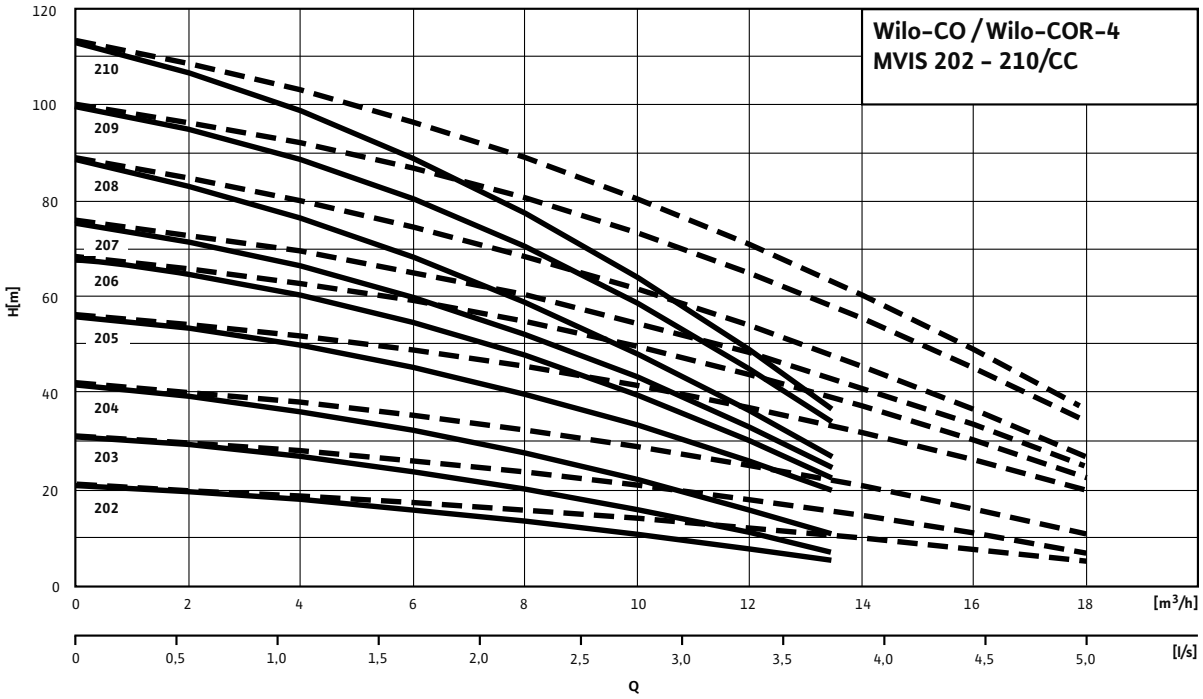

---- including standby pump

Motor data

Wilo-Comfort-N-CO(R)- 4 MVIS...	Power consumption	Nominal motor power	Nominal current 3~230 V, 50 Hz	Nominal current 3~400 V, 50 Hz
	P_1	P_2	I_N	
	kW		A	
202/CC	0.51	0.35	2.1	1.2
203/CC	0.72	0.45	2.6	1.5
204/CC	0.88	0.45	3	1.7
205/CC	1.2	1.1	4.5	2.6
206/CC	1.38	1.1	4.9	2.8
207/CC	1.53	1.1	5.2	3
208/CC	1.69	1.1	5.6	3.2
209/CC	2.14	2.2	8	4.6
210/CC	2.33	2.2	8.5	4.9

Technical data Wilo-Comfort-N-CO-/COR-MVIS.../CC

Dimension drawing

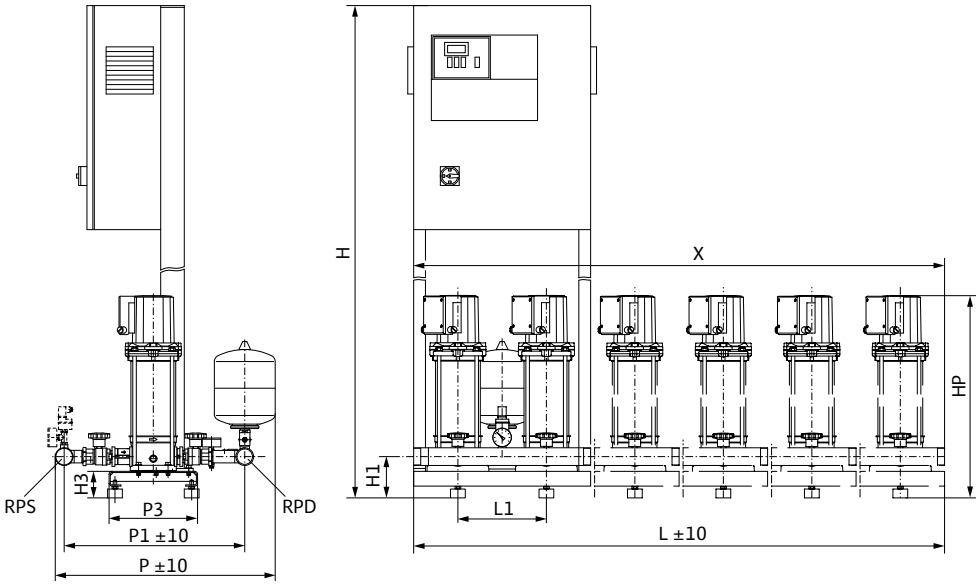

Sample systems are shown. Switchbox position depends on pump height.
Accessories (to be ordered separately): Optional WMS low-water cut-out switchgear kit
Installation surface: flat and horizontal
Installation location: dry, well ventilated and frost-proof

Dimensions, weights

Wilo-Comfort-N-CO(R)- 4 MVIS...	Nominal diameters of the pipe connections on suction side	Nominal diameters of pipe connections on the pressure side	Dimensions										Weight approx.	
													CO	COR
	RPS	*RPD*	*H*	*H1*	*H3*	*HP*	*L*	*L1*	*P*	*P1*	*P3*	*X*	*m*	
			mm										kg	
MVIS 202/CC	R 2	R 2	1670	140	90	444	1200	300	750	613	300	1200	156	164
MVIS 203/CC	R 2	R 2	1670	140	90	468	1200	300	750	613	300	1200	160	168
MVIS 204/CC	R 2	R 2	1670	140	90	492	1200	300	750	613	300	1200	162	170
MVIS 205/CC	R 2	R 2	1670	140	90	536	1200	300	750	613	300	1200	182	190
MVIS 206/CC	R 2	R 2	1670	140	90	560	1200	300	750	613	300	1200	184	192
MVIS 207/CC	R 2	R 2	1670	140	90	584	1200	300	750	613	300	1200	186	194
MVIS 208/CC	R 2	R 2	1670	140	90	608	1200	300	750	613	300	1200	187	199
MVIS 209/CC	R 2	R 2	1670	140	90	662	1200	300	750	613	300	1200	202	241
MVIS 210/CC	R 2	R 2	1670	140	90	686	1200	300	750	613	300	1200	211	253

Technical data Wilo-Comfort-N-CO-/COR-MVIS.../CC

Pump curves

Wilo-Comfort-N-CO(R)-4 MVIS 402-410/CC

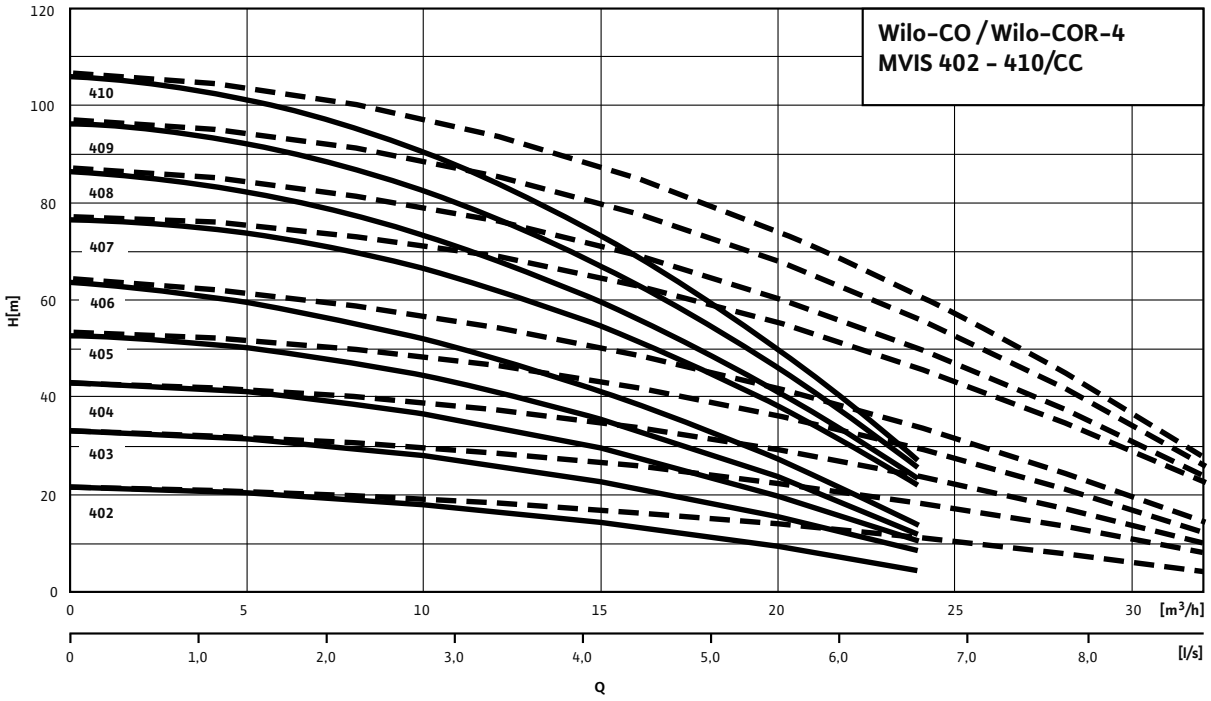

---- including standby pump

Motor data

Wilo-Comfort-N-CO(R)- 4 MVIS...	Power consumption	Nominal motor power	Nominal current 3~230 V, 50 Hz	Nominal current 3~400 V, 50 Hz
	P_1	P_2	I_N	
	kW		A	
402/CC	0.69	0.45	2.6	1.5
403/CC	1.02	1.1	4.2	2.4
404/CC	1.26	1.1	4.5	2.6
405/CC	1.48	1.1	5.2	3
406/CC	1.7	1.1	5.6	3.2
407/CC	2.2	2.2	8	4.6
408/CC	2.4	2.2	8.5	4.9
409/CC	2.69	2.2	9.2	5.3
410/CC	2.94	2.2	9.7	5.6

Technical data Wilo-Comfort-N-CO-/COR-MVIS.../CC

Dimension drawing

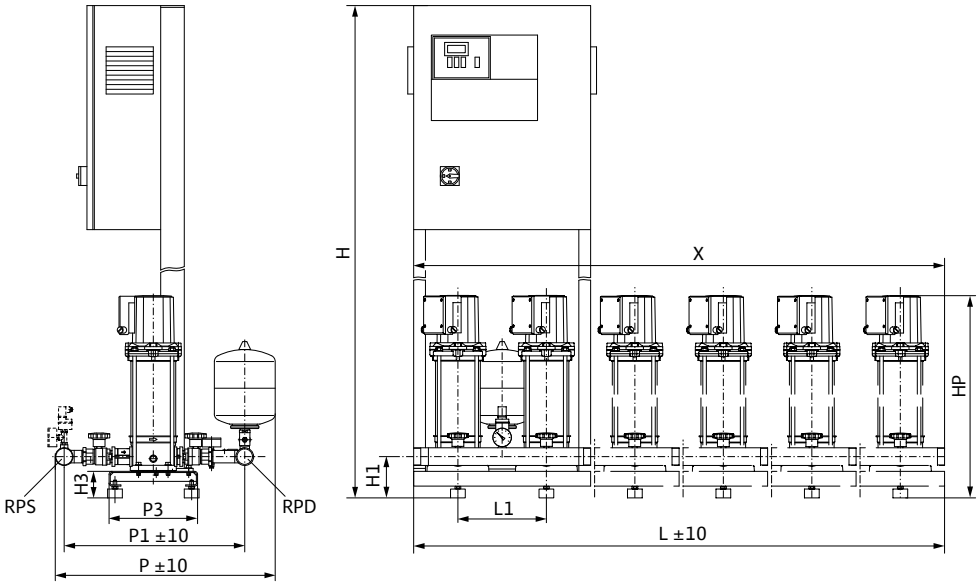

Sample systems are shown. Switchbox position depends on pump height.
Accessories (to be ordered separately): Optional WMS low-water cut-out switchgear kit
Installation surface: flat and horizontal
Installation location: dry, well ventilated and frost-proof

Dimensions, weights

Wilo-Comfort-N-CO(R)- 4 MVIS...	Nominal diameters of the pipe connections on suction side	Nominal diameters of pipe connections on the pressure side	Dimensions										Weight approx.	
													CO	COR
	RPS	*RPD*	*H*	*H1*	*H3*	*HP*	*L*	*L1*	*P*	*P1*	*P3*	*X*	*m*	
			mm										kg	
MVIS 402/CC	Rp 2½	Rp 2½	1670	140	90	444	1200	300	782	629	300	1200	173	188
MVIS 403/CC	Rp 2½	Rp 2½	1670	140	90	488	1200	300	782	629	300	1200	174	199
MVIS 404/CC	Rp 2½	Rp 2½	1670	140	90	512	1200	300	782	629	300	1200	186	201
MVIS 405/CC	Rp 2½	Rp 2½	1670	140	90	536	1200	300	782	629	300	1200	192	207
MVIS 406/CC	Rp 2½	Rp 2½	1670	140	90	560	1200	300	782	629	300	1200	194	209
MVIS 407/CC	Rp 2½	Rp 2½	1670	140	90	614	1200	300	782	629	300	1200	217	232
MVIS 408/CC	Rp 2½	Rp 2½	1670	140	90	638	1200	300	782	629	300	1200	222	236
MVIS 409/CC	Rp 2½	Rp 2½	1670	140	90	662	1200	300	782	629	300	1200	225	238
MVIS 410/CC	Rp 2½	Rp 2½	1670	140	90	686	1200	300	782	629	300	1200	242	256

Technical data Wilo-Comfort-N-CO-/COR-MVIS.../CC

Pump curves

Wilo-Comfort-N-CO(R)-4 MVIS 802-806/CC

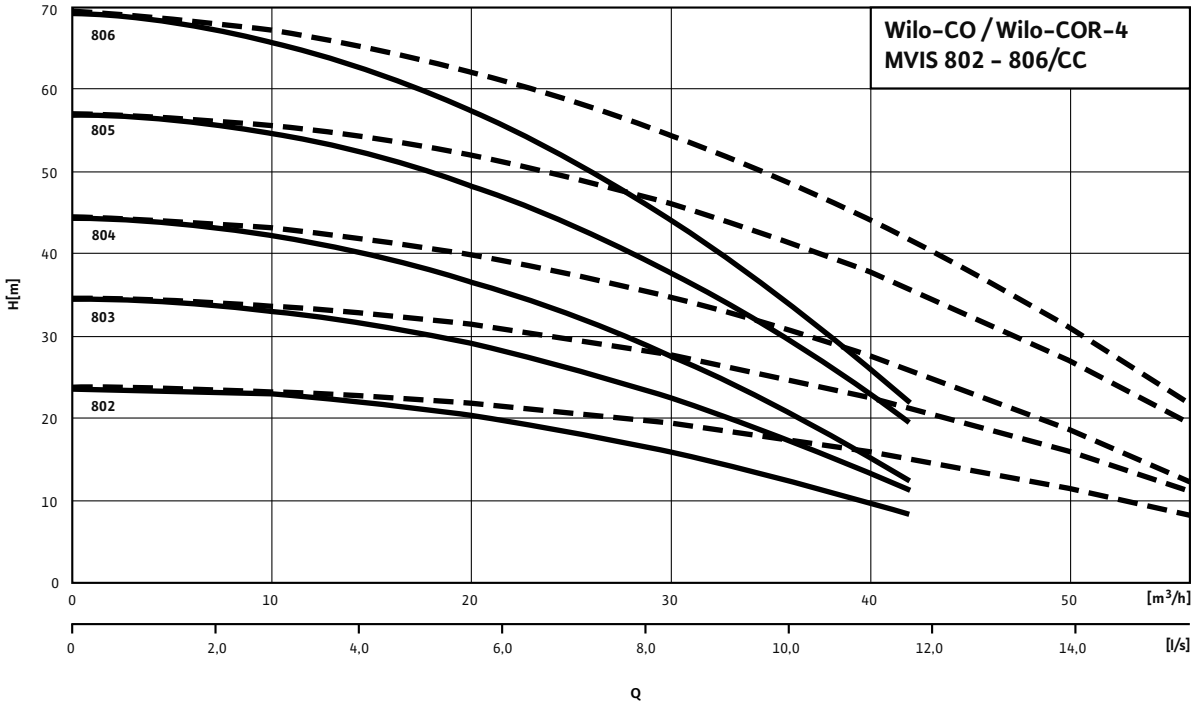

---- including standby pump

Motor data				
Wilo-Comfort-N-CO(R)- 4 MVIS...	**Power consumption**	**Nominal motor power**	**Nominal current 3~230 V, 50 Hz**	**Nominal current 3~400 V, 50 Hz**
	P_1	P_2	I_N	
	kW		A	
802/CC	1.25	1.1	4.5	2.6
803/CC	1.6	1.1	5.4	3.1
804/CC	1.95	1.1	6.3	3.6
805/CC	2.67	2.2	9.2	5.3
806/CC	2.98	2.2	9.7	5.6

Technical data Wilo-Comfort-N-CO-/COR-MVIS.../CC

Dimension drawing

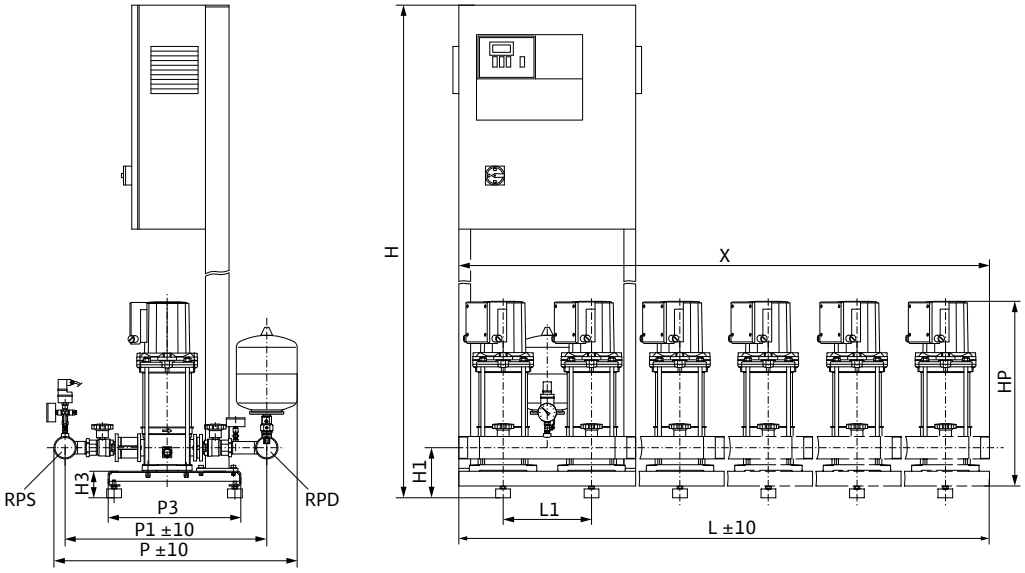

Sample systems are shown. Switchbox position depends on pump height.
Accessories (to be ordered separately): Optional WMS low-water cut-out switchgear kit
Installation surface: flat and horizontal
Installation location: dry, well ventilated and frost-proof

Dimensions, weights

Wilo-Comfort-N-CO(R)- 4 MVIS...	Nominal diameters of the pipe connections on suction side	Nominal diameters of pipe connections on the pressure side	Dimensions										Weight approx.	
													CO	COR
	RPS	*RPD*	*H*	*H1*	*H3*	*HP*	*L*	*L1*	*P*	*P1*	*P3*	*X*	*m*	
			mm										kg	
MVIS 802/CC	Rp 2½	Rp 2½	1670	170	90	515	1200	300	825	684	450	1200	229	245
MVIS 803/CC	Rp 2½	Rp 2½	1670	170	90	545	1200	300	825	684	450	1200	231	247
MVIS 804/CC	Rp 2½	Rp 2½	1670	170	90	575	1200	300	825	684	450	1200	234	250
MVIS 805/CC	Rp 2½	Rp 2½	1670	170	90	635	1200	300	825	684	450	1200	246	260
MVIS 806/CC	Rp 2½	Rp 2½	1670	170	90	665	1200	300	825	698	450	1200	263	277

Technical data Wilo-Comfort-N-CO-/COR-MVIS.../CC

Pump curves

Wilo-Comfort-N-CO(R)-5 MVIS 202-210/CC

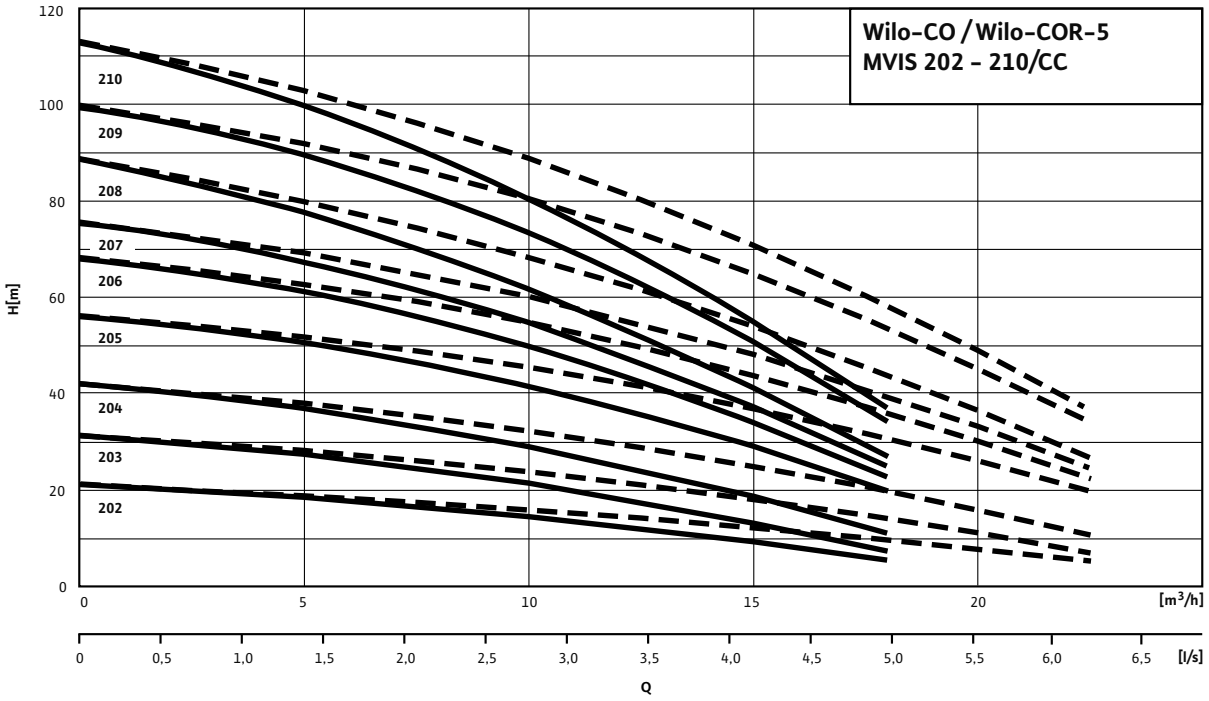

---- including standby pump

Motor data

Wilo-Comfort-N-CO(R)- 5 MVIS...	Power consumption	Nominal motor power	Nominal current 3~230 V, 50 Hz	Nominal current 3~400 V, 50 Hz
	P_1	P_2	I_N	
	kW		A	
202/CC	0.51	0.35	2.1	1.2
203/CC	0.72	0.45	2.6	1.5
204/CC	0.88	0.45	3	1.7
205/CC	1.2	1.1	4.5	2.6
206/CC	1.38	1.1	4.9	2.8
207/CC	1.53	1.1	5.2	3
208/CC	1.69	1.1	5.6	3.2
209/CC	2.14	2.2	8	4.6
210/CC	2.33	2.2	8.5	4.9

Technical data Wilo-Comfort-N-CO-/COR-MVIS.../CC

Dimension drawing

Wilo-Comfort-N-CO(R)-2...6 MVIS 202...410/CC

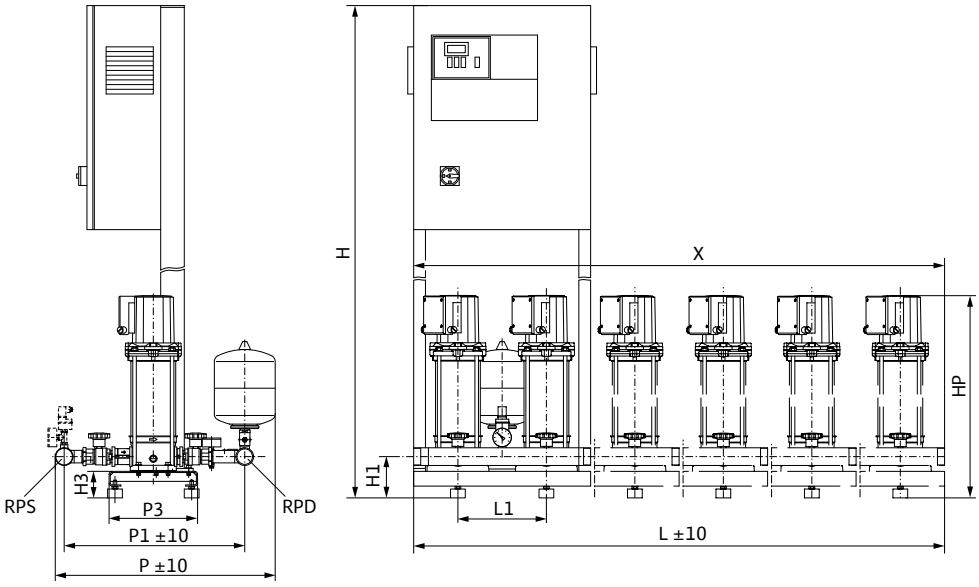

Sample systems are shown. Switchbox position depends on pump height.
Accessories (to be ordered separately): Optional WMS low-water cut-out switchgear kit
Installation surface: flat and horizontal
Installation location: dry, well ventilated and frost-proof

Dimensions, weights

Wilo-Comfort-N-CO(R)- 5 MVIS...	Nominal diameters of the pipe connections on suction side	Nominal diameters of pipe connections on the pressure side	Dimensions										Weight approx.	
													CO	COR
	RPS	*RPD*	*H*	*H1*	*H3*	*HP*	*L*	*L1*	*P*	*P1*	*P3*	*X*	*m*	
			mm										kg	
MVIS 202/CC	R 2	R 2	1670	140	90	444	1500	300	750	613	300	1500	173	183
MVIS 203/CC	R 2	R 2	1670	140	90	468	1500	300	750	613	300	1500	178	188
MVIS 204/CC	R 2	R 2	1670	140	90	492	1500	300	750	613	300	1500	181	191
MVIS 205/CC	R 2	R 2	1670	140	90	536	1500	300	750	613	300	1500	206	216
MVIS 206/CC	R 2	R 2	1670	140	90	560	1500	300	750	613	300	1500	208	218
MVIS 207/CC	R 2	R 2	1670	140	90	584	1500	300	750	613	300	1500	211	221
MVIS 208/CC	R 2	R 2	1670	140	90	608	1500	300	750	613	300	1500	215	225
MVIS 209/CC	R 2	R 2	1670	140	90	662	1500	300	750	613	300	1500	229	239
MVIS 210/CC	R 2	R 2	1670	140	90	686	1500	300	750	613	300	1500	241	251

Pressure boosting

Multi-pump systems with fixed speed or speed-controlled base-load pump

Technical data Wilo-Comfort-N-CO-/COR-MVIS.../CC

Pump curves

Wilo-Comfort-N-CO(R)-5 MVIS 402-410/CC

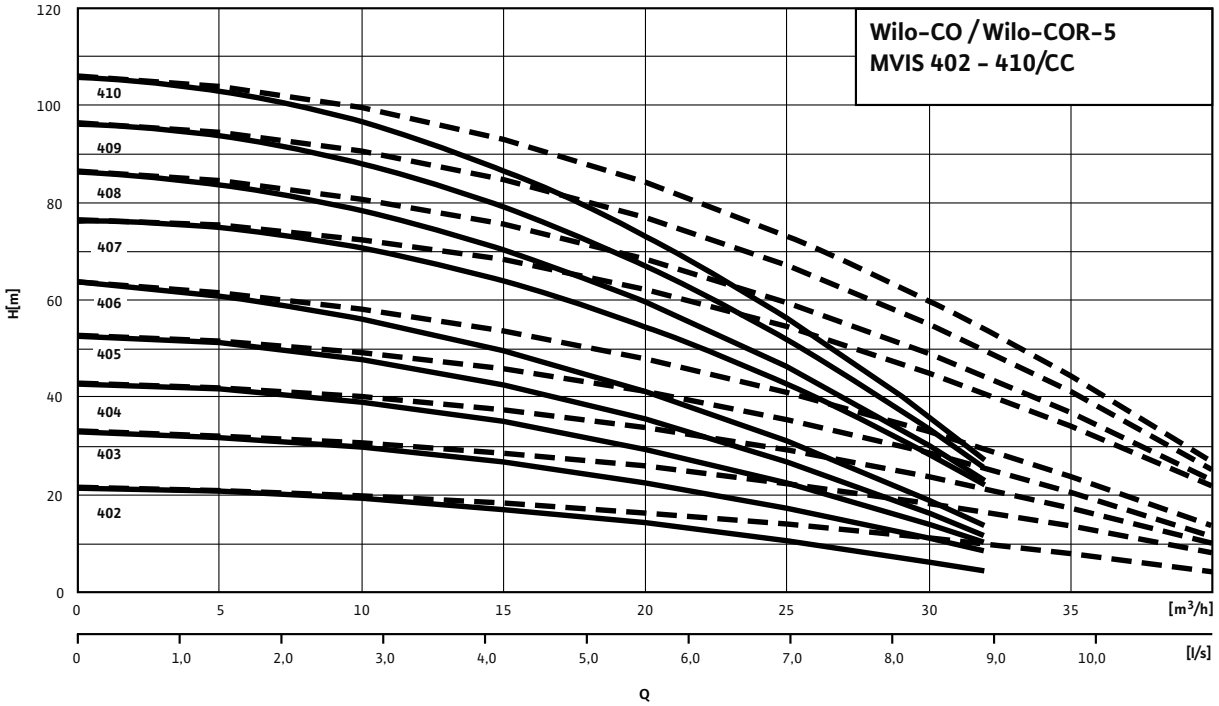

---- including standby pump

Motor data				
Wilo-Comfort-N-CO(R)- 5 MVIS...	**Power consumption**	**Nominal motor power**	**Nominal current 3~230 V, 50 Hz**	**Nominal current 3~400 V, 50 Hz**
	P_1	P_2	I_N	
	kW		A	
402/CC	0.69	0.45	2.6	1.5
403/CC	1.02	1.1	4.2	2.4
404/CC	1.26	1.1	4.5	2.6
405/CC	1.48	1.1	5.2	3
406/CC	1.7	1.1	5.6	3.2
407/CC	2.2	2.2	8	4.6
408/CC	2.4	2.2	8.5	4.9
409/CC	2.69	2.2	9.2	5.3
410/CC	2.94	2.2	9.7	5.6

Technical data Wilo-Comfort-N-CO-/COR-MVIS.../CC

Dimension drawing

Wilo-Comfort-N-CO(R)-2...6 MVIS 202...410/CC

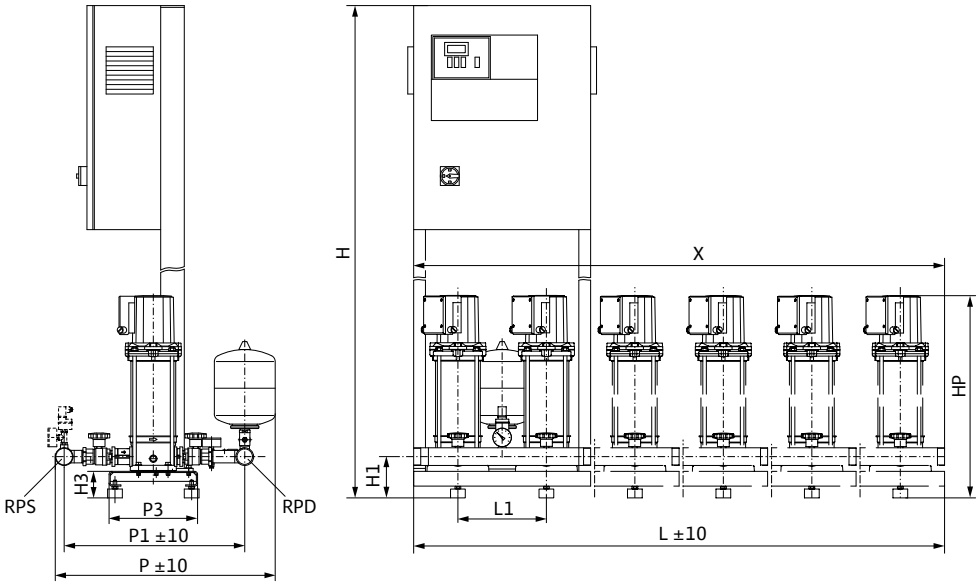

Sample systems are shown. Switchbox position depends on pump height.
Accessories (to be ordered separately): Optional WMS low-water cut-out switchgear kit
Installation surface: flat and horizontal
Installation location: dry, well ventilated and frost-proof

Dimensions, weights

Wilo-Comfort-N-CO(R)- 5 MVIS...	Nominal diameters of the pipe connections on suction side	Nominal diameters of pipe connections on the pressure side	Dimensions										Weight approx.	
													CO	COR
	RPS	*RPD*	*H*	*H1*	*H3*	*HP*	*L*	*L1*	*P*	*P1*	*P3*	*X*	*m*	
			mm										kg	
MVIS 402/CC	Rp 2½	Rp 2½	1670	140	90	444	1500	300	782	629	300	1500	184	202
MVIS 403/CC	Rp 2½	Rp 2½	1670	140	90	488	1500	300	782	629	300	1500	209	227
MVIS 404/CC	Rp 2½	Rp 2½	1670	140	90	512	1500	300	782	629	300	1500	211	230
MVIS 405/CC	Rp 2½	Rp 2½	1670	140	90	536	1500	300	782	629	300	1500	214	232
MVIS 406/CC	Rp 2½	Rp 2½	1670	140	90	560	1500	300	782	629	300	1500	216	235
MVIS 407/CC	Rp 2½	Rp 2½	1670	140	90	614	1500	300	782	629	300	1500	241	260
MVIS 408/CC	Rp 2½	Rp 2½	1670	140	90	638	1500	300	782	629	300	1500	243	262
MVIS 409/CC	Rp 2½	Rp 2½	1670	140	90	662	1500	300	782	629	300	1500	244	265
MVIS 410/CC	Rp 2½	Rp 2½	1670	140	90	686	1500	300	782	629	300	1500	249	267

Technical data Wilo-Comfort-N-CO-/COR-MVIS.../CC

Pump curves

Wilo-Comfort-N-CO(R)-5 MVIS 802-806/CC

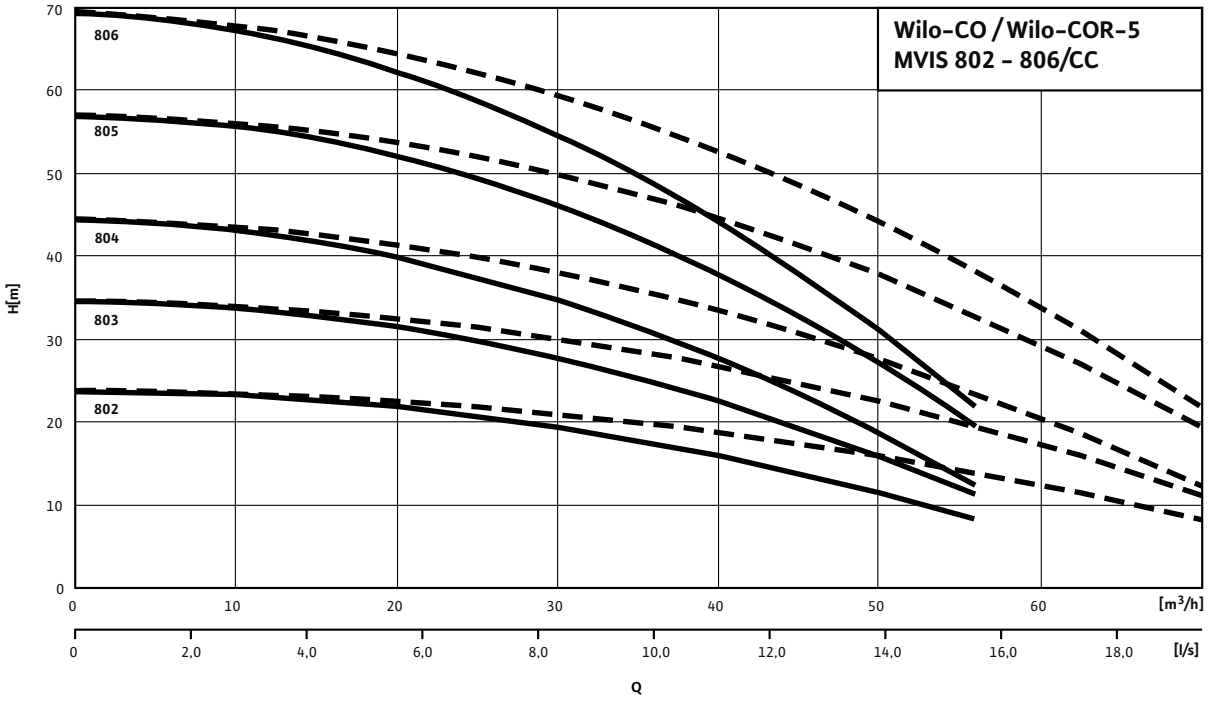

---- including standby pump

Motor data				
Wilo-Comfort-N-CO(R)- 5 MVIS...	**Power consumption**	**Nominal motor power**	**Nominal current 3~230 V, 50 Hz**	**Nominal current 3~400 V, 50 Hz**
	P_1	P_2	I_N	
	kW		A	
802/CC	1.25	1.1	4.5	2.6
803/CC	1.6	1.1	5.4	3.1
804/CC	1.95	1.1	6.3	3.6
805/CC	2.67	2.2	9.2	5.3
806/CC	2.98	2.2	9.7	5.6

Technical data Wilo-Comfort-N-CO-/COR-MVIS.../CC

Dimension drawing

Wilo-Comfort-N-CO(R)-2...6 MVIS 802...806/CC

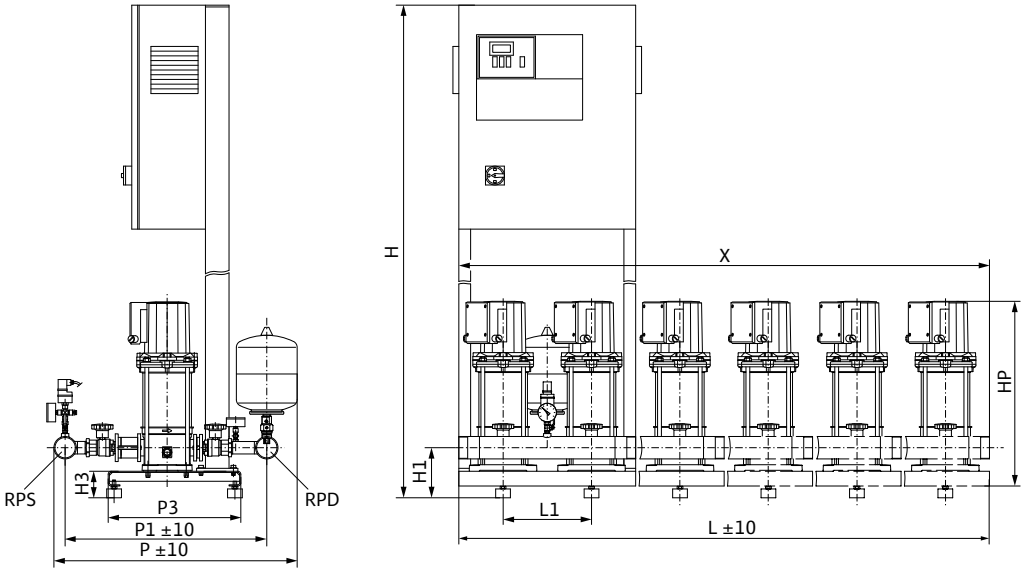

Sample systems are shown. Switchbox position depends on pump height.
Accessories (to be ordered separately): Optional WMS low-water cut-out switchgear kit
Installation surface: flat and horizontal
Installation location: dry, well ventilated and frost-proof

Dimensions, weights

Wilo-Comfort-N-CO(R)- 5 MVIS...	Nominal diameters of the pipe connections on suction side	Nominal diameters of pipe connections on the pressure side	Dimensions										Weight approx.	
													CO	COR
	RPS	*RPD*	*H*	*H1*	*H3*	*HP*	*L*	*L1*	*P*	*P1*	*P3*	*X*	*m*	
			mm										kg	
MVIS 802/CC	Rp 3	Rp 3	1670	170	90	515	1500	300	839	698	470	1500	255	274
MVIS 803/CC	Rp 3	Rp 3	1670	170	90	545	1500	300	839	698	470	1500	257	276
MVIS 804/CC	Rp 3	Rp 3	1670	170	90	575	1500	300	839	698	470	1500	261	278
MVIS 805/CC	Rp 3	Rp 3	1670	170	90	635	1500	300	839	698	470	1500	271	288
MVIS 806/CC	Rp 3	Rp 3	1670	170	90	665	1500	300	839	698	470	1500	285	303

Technical data Wilo-Comfort-N-CO-/COR-MVIS.../CC

Pump curves

Wilo-Comfort-N-CO(R)-6 MVIS 202-210/CC

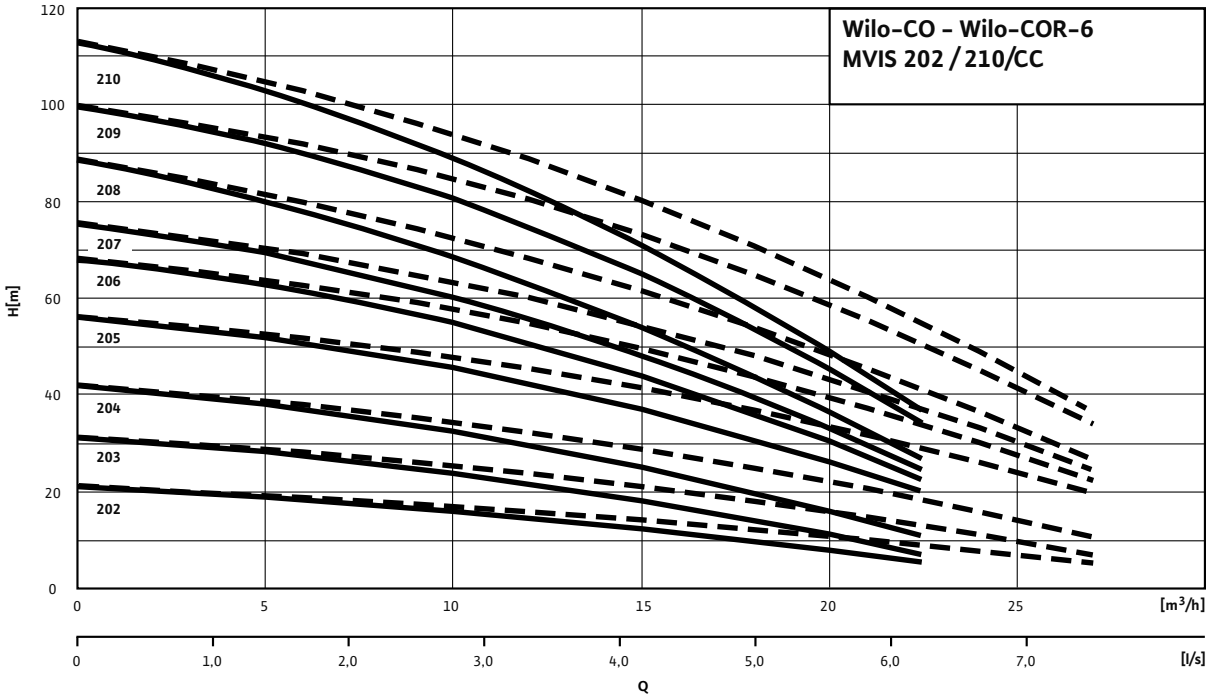

---- including standby pump

Motor data

Wilo-Comfort-N-CO(R)- 6 MVIS...	Power consumption	Nominal motor power	Nominal current 3~230 V, 50 Hz	Nominal current 3~400 V, 50 Hz
	P_1	P_2	I_N	
	kW		A	
202/CC	0.51	0.35	2.1	1.2
203/CC	0.72	0.45	2.6	1.5
204/CC	0.88	0.45	3	1.7
205/CC	1.2	1.1	4.5	2.6
206/CC	1.38	1.1	4.9	2.8
207/CC	1.53	1.1	5.2	3
208/CC	1.69	1.1	5.6	3.2
209/CC	2.14	2.2	8	4.6
210/CC	2.33	2.2	8.5	4.9

Technical data Wilo-Comfort-N-CO-/COR-MVIS.../CC

Dimension drawing

Wilo-Comfort-N-CO(R)-2...6 MVIS 202...410/CC

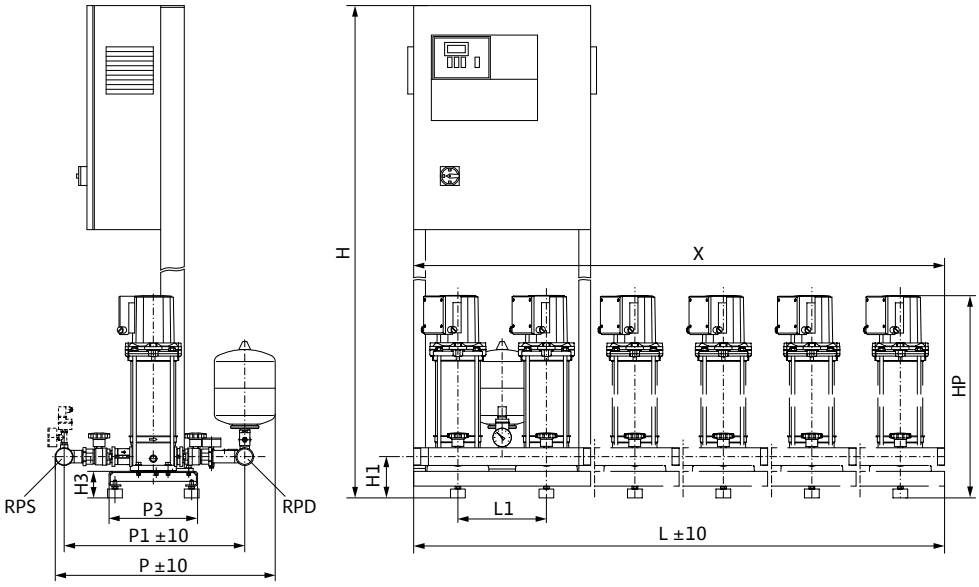

Sample systems are shown. Switchbox position depends on pump height.
Accessories (to be ordered separately): Optional WMS low-water cut-out switchgear kit
Installation surface: flat and horizontal
Installation location: dry, well ventilated and frost-proof

Dimensions, weights

Wilo-Comfort-N-CO(R)- 6 MVIS...	Nominal diameters of the pipe connections on suction side	Nominal diameters of the pipe connections on the pressure side	Dimensions										Weight approx.	
													CO	COR
	RPS	*RPD*	*H*	*H1*	*H3*	*HP*	*L*	*L1*	*P*	*P1*	*P3*	*X*	*m*	
			mm										kg	
MVIS 202/CC	R 2	R 2	1670	140	90	444	1800	300	750	613	300	1800	211	221
MVIS 203/CC	R 2	R 2	1670	140	90	468	1800	300	750	613	300	1800	230	241
MVIS 204/CC	R 2	R 2	1670	140	90	492	1800	300	750	613	300	1800	233	244
MVIS 205/CC	R 2	R 2	1670	140	90	536	1800	300	750	613	300	1800	263	274
MVIS 206/CC	R 2	R 2	1670	140	90	560	1800	300	750	613	300	1800	266	277
MVIS 207/CC	R 2	R 2	1670	140	90	584	1800	300	750	613	300	1800	269	280
MVIS 208/CC	R 2	R 2	1670	140	90	608	1800	300	750	613	300	1800	275	286
MVIS 209/CC	R 2	R 2	1670	140	90	662	1800	300	750	613	300	1800	291	302
MVIS 210/CC	R 2	R 2	1670	140	90	686	1800	300	750	613	300	1800	305	316

Technical data Wilo-Comfort-N-CO-/COR-MVIS.../CC

Pump curves

Wilo-Comfort-N-CO(R)-6 MVIS 402-410/CC

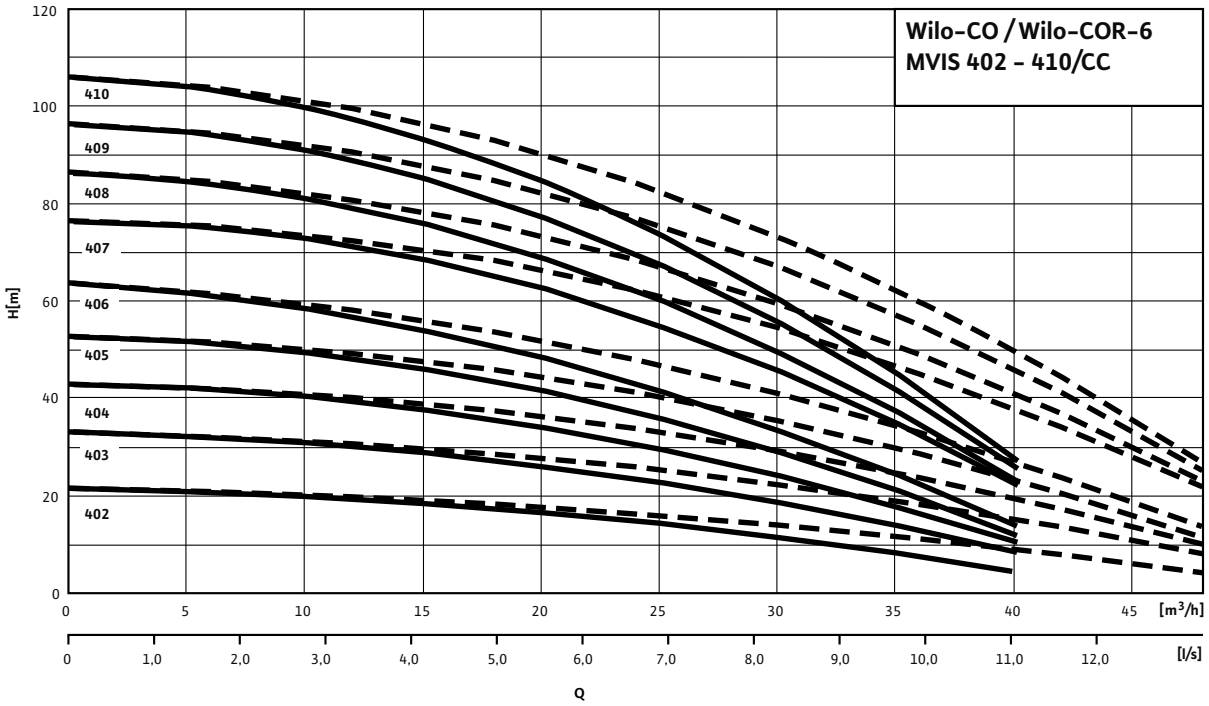

---- including standby pump

Motor data				
Wilo-Comfort-N-CO(R)- 6 MVIS...	**Power consumption**	**Nominal motor power**	**Nominal current 3~230 V, 50 Hz**	**Nominal current 3~400 V, 50 Hz**
	P_1	P_2	I_N	
	kW		A	
402/CC	0.69	0.45	2.6	1.5
403/CC	1.02	1.1	4.2	2.4
404/CC	1.26	1.1	4.5	2.6
405/CC	1.48	1.1	5.2	3
406/CC	1.7	1.1	5.6	3.2
407/CC	2.2	2.2	8	4.6
408/CC	2.4	2.2	8.5	4.9
409/CC	2.69	2.2	9.2	5.3
410/CC	2.94	2.2	9.7	5.6

Technical data Wilo-Comfort-N-CO-/COR-MVIS.../CC

Dimension drawing

Wilo-Comfort-N-CO(R)-2...6 MVIS 202...410/CC

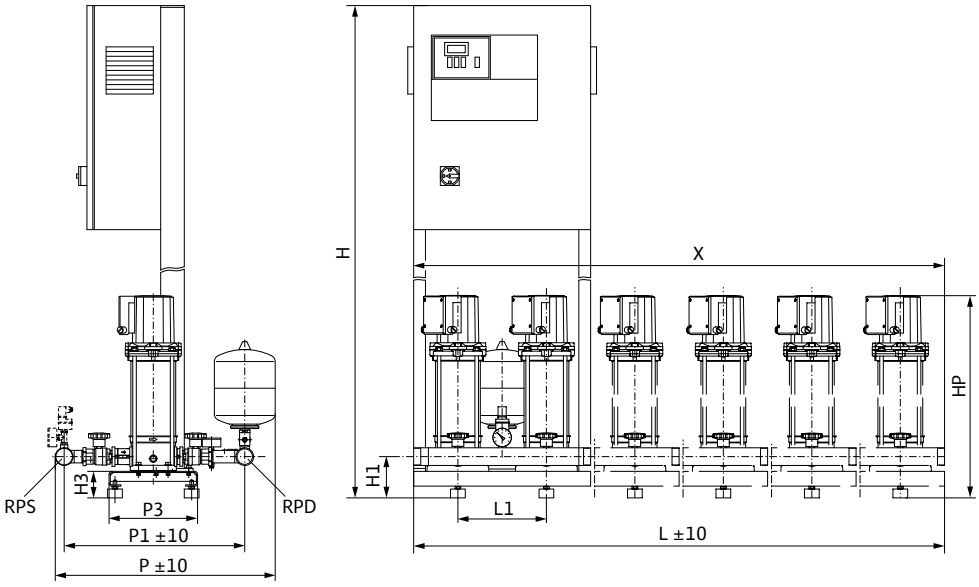

Sample systems are shown. Switchbox position depends on pump height.
Accessories (to be ordered separately): Optional WMS low-water cut-out switchgear kit
Installation surface: flat and horizontal
Installation location: dry, well ventilated and frost-proof

Dimensions, weights

Wilo-Comfort-N-CO(R)- 6 MVIS...	Nominal diameters of the pipe connections on suction side	Nominal diameters of pipe connections on the pressure side	Dimensions										Weight approx.	
													CO	COR
	RPS	*RPD*	*H*	*H1*	*H3*	*HP*	*L*	*L1*	*P*	*P1*	*P3*	*X*	*m*	
			mm										kg	
MVIS 402/CC	Rp 2½	Rp 2½	1670	140	90	444	1800	300	782	629	300	1800	225	240
MVIS 403/CC	Rp 2½	Rp 2½	1670	140	90	488	1800	300	782	629	300	1800	252	267
MVIS 404/CC	Rp 2½	Rp 2½	1670	140	90	512	1800	300	782	629	300	1800	253	268
MVIS 405/CC	Rp 2½	Rp 2½	1670	140	90	536	1800	300	782	629	300	1800	255	270
MVIS 406/CC	Rp 2½	Rp 2½	1670	140	90	560	1800	300	782	629	300	1800	260	275
MVIS 407/CC	Rp 2½	Rp 2½	1670	140	90	614	1800	300	782	629	300	1800	283	298
MVIS 408/CC	Rp 2½	Rp 2½	1670	140	90	638	1800	300	782	629	300	1800	286	300
MVIS 409/CC	Rp 2½	Rp 2½	1670	140	90	662	1800	300	782	629	300	1800	289	303
MVIS 410/CC	Rp 2½	Rp 2½	1670	140	90	686	1800	300	782	629	300	1800	290	305

Technical data Wilo-Comfort-N-CO-/COR-MVIS.../CC

Pump curves

Wilo-Comfort-N-CO(R)-6 MVIS 802-806/CC

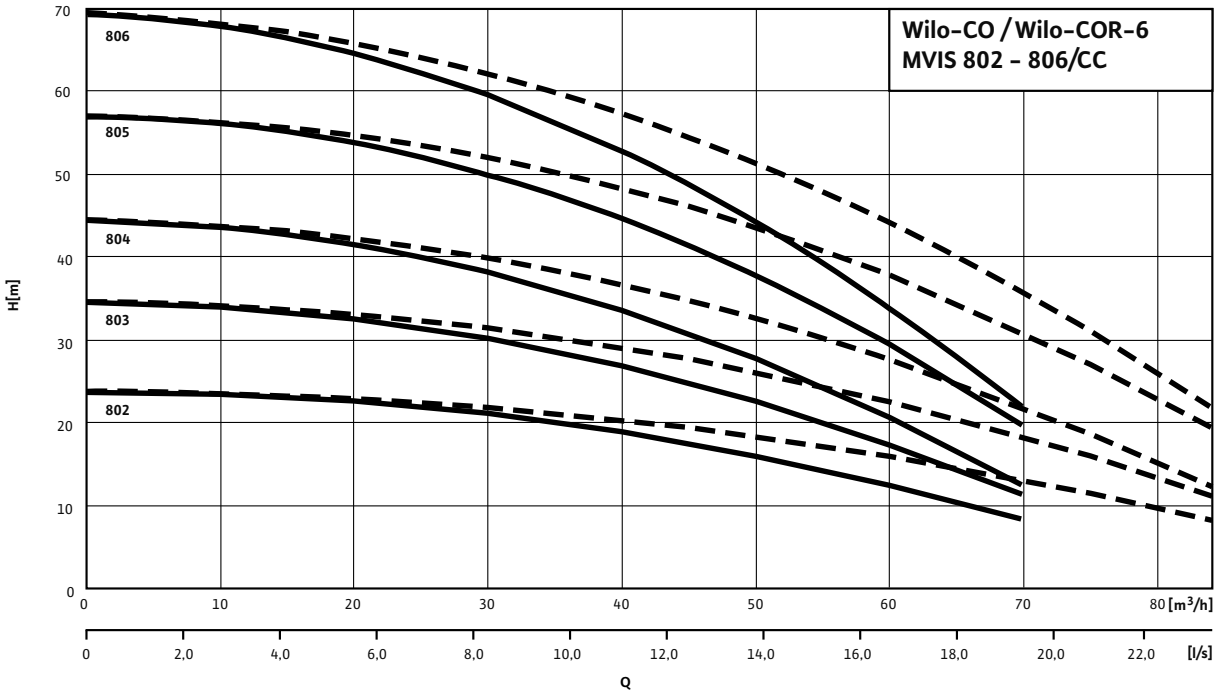

---- including standby pump

Motor data				
Wilo-Comfort-N-CO(R)- 6 MVIS...	**Power consumption**	**Nominal motor power**	**Nominal current 3~230 V, 50 Hz**	**Nominal current 3~400 V, 50 Hz**
	P_1	P_2	I_N	
	kW		A	
802/CC	1.25	1.1	4.5	2.6
803/CC	1.6	1.1	5.4	3.1
804/CC	1.95	1.1	6.3	3.6
805/CC	2.67	2.2	9.2	5.3
806/CC	2.98	2.2	9.7	5.6

Technical data Wilo-Comfort-N-CO-/COR-MVIS.../CC

Dimension drawing

Wilo-Comfort-N-CO(R)-2...6 MVIS 802...806/CC

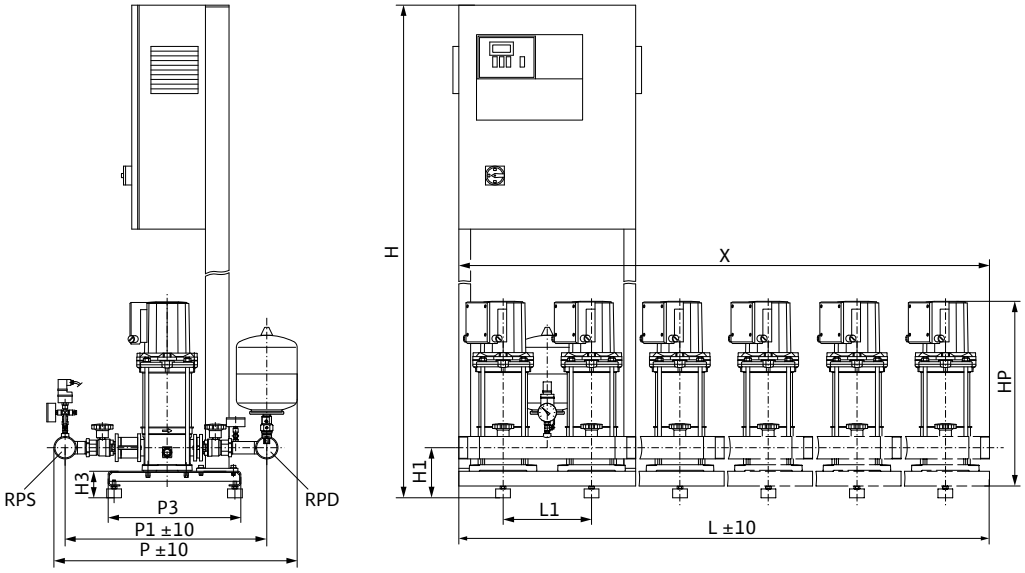

Sample systems are shown. Switchbox position depends on pump height.
Accessories (to be ordered separately): Optional WMS low-water cut-out switchgear kit
Installation surface: flat and horizontal
Installation location: dry, well ventilated and frost-proof

Dimensions, weights

Wilo-Comfort-N-CO(R)- 6 MVIS...	Nominal diameters of the pipe connections on suction side	Nominal diameters of pipe connections on the pressure side	Dimensions										Weight approx.	
													CO	COR
	RPS	*RPD*	*H*	*H1*	*H3*	*HP*	*L*	*L1*	*P*	*P1*	*P3*	*X*	*m*	
			mm										kg	
MVIS 802/CC	Rp 3	Rp 3	1670	170	90	515	1800	300	839	698	470	1800	283	307
MVIS 803/CC	Rp 3	Rp 3	1670	170	90	545	1800	300	839	698	470	1800	285	309
MVIS 804/CC	Rp 3	Rp 3	1670	170	90	575	1800	300	839	698	470	1800	289	312
MVIS 805/CC	Rp 3	Rp 3	1670	170	90	635	1800	300	839	698	470	1800	298	320
MVIS 806/CC	Rp 3	Rp 3	1670	170	90	665	1800	300	839	698	470	1800	310	332

Pressure boosting

Multi-pump system with fixed speed

Series description Wilo-Economy CO-MHI.../ER

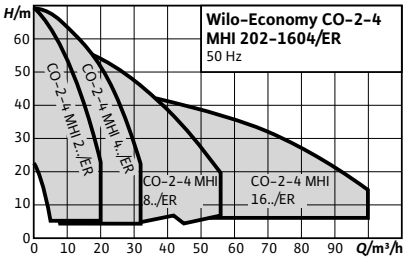

Design

Pressure boosting system with 2 to 4 parallel-switched, non-self-priming, horizontal high-pressure multistage centrifugal pumps made of stainless steel

Type key

Example:	**Wilo-CO-2 MHI 405/ER**
CO	Compact pressure boosting system
2	Number of pumps
MHI	Pump series
4	Rated volume flow of the single pump [m^3/h]
05	Number of single-pump stages
ER	Control unit; ER = Economy-Controller

Application

- For fully automatic water supply and pressure boosting in residential, commercial and public buildings, hotels, hospitals, department stores and for industrial systems.
- Pumping of potable water and process water, cooling water, water for fire-fighting or other water mixtures that do not chemically or mechanically attack the materials used and do not contain abrasive or long-fibre constituents

Special features/product advantages

- Compact system with outstanding price/performance ratio in compliance with the requirements of DIN 1988
- 2 - 4 fully stainless steel horizontal MHI high-pressure multistage centrifugal pumps switched in parallel (IE2 motors)
- Easily adjustable and operationally reliable thanks to integrated ER 2 to ER 4 switchgears

Technical data

- Mains connection 3~230 V ±10%, 50 Hz (other versions on request)
- Fluid temperature max. 50°C (70°C optional)
- Ambient temperature max. 40 °C
- Operating pressure 16 bar
- Inlet pressure 6 bar
- Nominal connection diameter on the discharge side Rp 1¼ - DN 100
- Nominal connection diameters on intake side Rp 1¼ - DN 100
- Nominal speed 2850 rpm
- Protection class IP 41 / IP 54 optional
- Fuse A, AC 3 on mains side according to motor power and EVU regulations
- Approved fluids (other fluids on request):
  - Cooling water
  - Potable and process water
  - Fire water (wet line; for dry lines on request - comply with separate specifications of DIN 1988 (EN 806) and of fire-protection authorities.
- Note on fluids: Approved fluids are generally water mixtures which do not chemically or mechanically attack the materials used and do not contain either abrasive or fibrous matter

Equipment/function

- 2-4 pumps per system
- Components in contact with the fluid are corrosion-resistant
- Galvanised base frame with height-adjustable vibration damper for insulation against structure-borne noise
- Pipework made of stainless steel 1.4571
- Gear-operated shut-off ball cock/annular shut-off valve on suction and pressure side of every pump
- Non-return valve, on pressure side
- Diaphragm pressure vessel 8 l, PN 16, on pressure side
- Pressure sensor, on discharge side
- Optional pressure gauge (suction side)
- Pressure gauge (discharge side)
- Optional low-water cut-out switchgear

Materials

- Impellers: 1.4301/1.4404 stainless steel
- Stage chambers: 1.4301/1.4404 stainless steel
- Pump housing: 1.4301/1.4404 stainless steel
- Shaft: 1.4404 stainless steel
- Gasket: EPDM (EP 851)/FKM (Viton)
- Housing cover: 1.4301/1.4404
- Mechanical seal: B-carbon/tungsten carbide
- Pressure shroud: 1.4301/1.4404
- Bearing: Tungsten carbide
- Pump foot: Aluminium

Description/design

- Base frame: galvanised and provided with height-adjustable vibration absorbers for comprehensive insulation against structure-borne noise; other versions on request
- Pipework: complete pipework made of stainless steel, suitable for the connection of all piping materials used in building services; pipework is dimensioned according to the overall hydraulic performance of the pressure boosting system

Series description Wilo-Economy CO-MHI.../ER

- Pumps: 2 to 4 parallel pumps from the series MHI 2, MHI 4, MHI 8 and MHI 16; all pump components in contact with fluid are made of stainless steel
- Valves: each pump is fitted on the suction and pressure side with a check valve with DVGW approval mark and a pressure-side DVGW-approved non-return valve
- Diaphragm pressure vessel: 8 l/PN 16 on the discharge side, with a butyl rubber diaphragm, completely safe in accordance with food safety laws; for testing and inspection purposes, with shut-off ball cock, with drain and throughflow fitting according to DIN 4807
- Pressure sensor: 4 to 20 mA, located on the discharge side for activating the central Economy-Controller
- Pressure display: by means of ø 63 mm pressure gauge on the discharge side
- Switchgear: System is standard-equipped with ER 2-4 Economy-Controller

Scope of delivery

- Factory-mounted, connection-ready pressure boosting system checked for functionality and impermeability
- Packaging
- Installation and operating instructions

Electrical connection

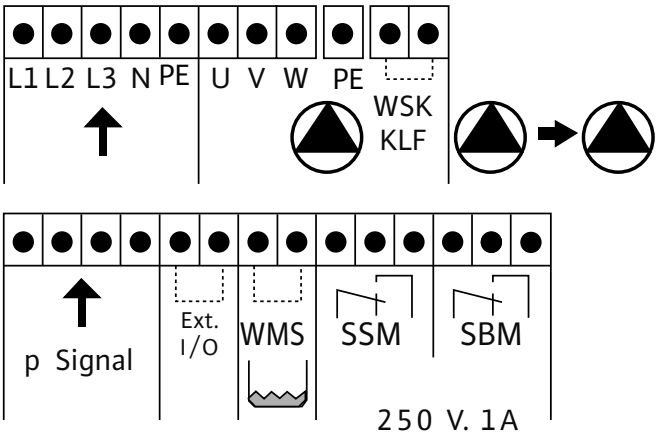

Technical data Wilo-Economy CO-MHI.../ER

Pump curves

Wilo-Economy CO-2 MHI 202-206/ER

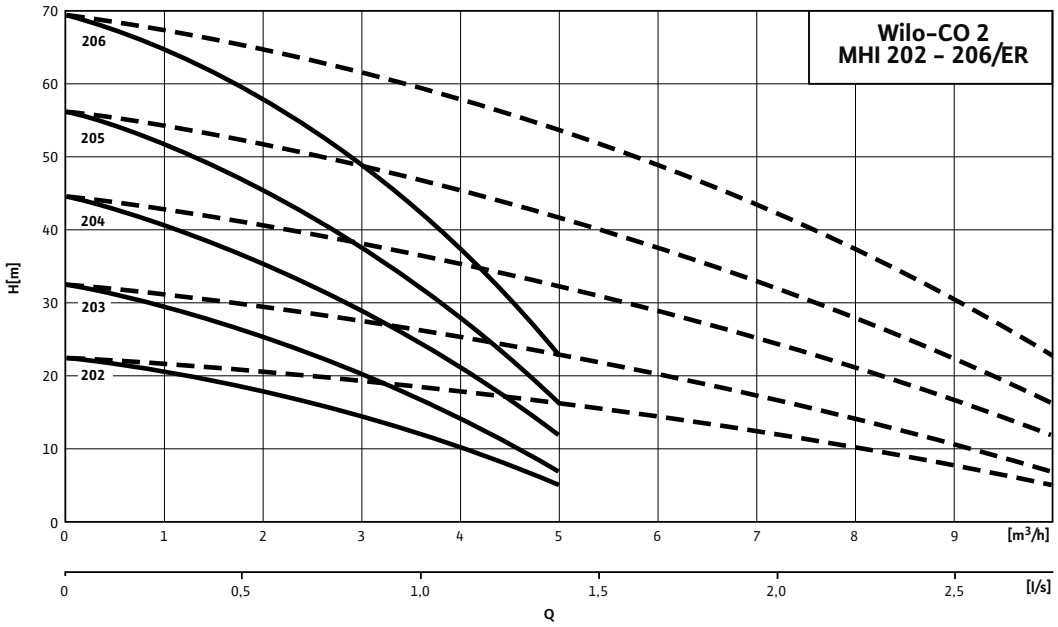

---- including standby pump

Motor data							
Wilo-Economy CO-2...	**Power consumption**	**Nominal motor power**	**Nominal current 3~230 V, 50 Hz**	**Nominal current 3~400 V, 50 Hz**	**Motor efficiency**		
	P_1	P_2	I_N		$\eta_{m\,50\%}$	$\eta_{m\,75\%}$	$\eta_{m\,100\%}$
	kW		A		%		
MHI 202/ER	0.83	0.55	3	1.7	–	–	–
MHI 203/ER	0.83	0.55	3	1.7	–	–	–
MHI 204/ER	0.83	0.55	3	1.7	–	–	–
MHI 205/ER	1.11	0.75	3.3	1.91	76.0	77.4	77.4
MHI 206/ER	1.57	1.1	4.8	2.8	78.0	79.6	79.6

Motor efficiency based on 400 V, 50 Hz

Technical data Wilo-Economy CO-MHI.../ER

Dimension drawing

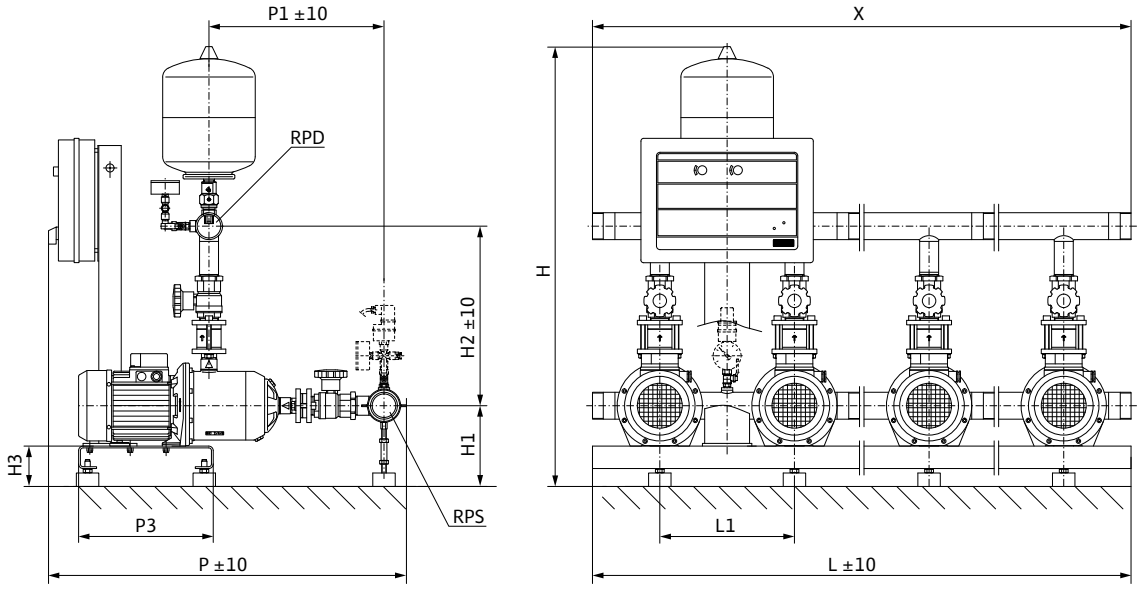

Sample systems are shown. Switchbox position depends on pump height.
Accessories (to be ordered separately): Optional WMS low-water cut-out switchgear kit
Installation surface: flat and horizontal
Installation location: dry, well ventilated and frost-proof

Dimensions, weights

Wilo-Economy CO-2...	Nominal diameters of the pipe connections on suction side	Nominal diameters of pipe connections on the pressure side	Dimensions										Weight approx.
	RPS	*RPD*	*L*	*L1*	*H*	*H1*	*H2*	*H3*	*P*	*P1*	*P3*	*X*	*m*
			mm										kg
MHI 202/ER	R 2	R 2	600	300	980	180	400	90	725	318	300	600	50
MHI 203/ER	R 2	R 2	600	300	980	180	400	90	725	318	300	600	50
MHI 204/ER	R 2	R 2	600	300	980	180	400	90	775	366	300	600	52
MHI 205/ER	R 2	R 2	600	300	980	180	400	90	775	366	300	600	56
MHI 206/ER	R 2	R 2	600	300	980	180	400	90	800	390	300	600	66

Technical data Wilo-Economy CO-MHI.../ER

Pump curves

Wilo-Economy CO-3 MHI 202-206/ER

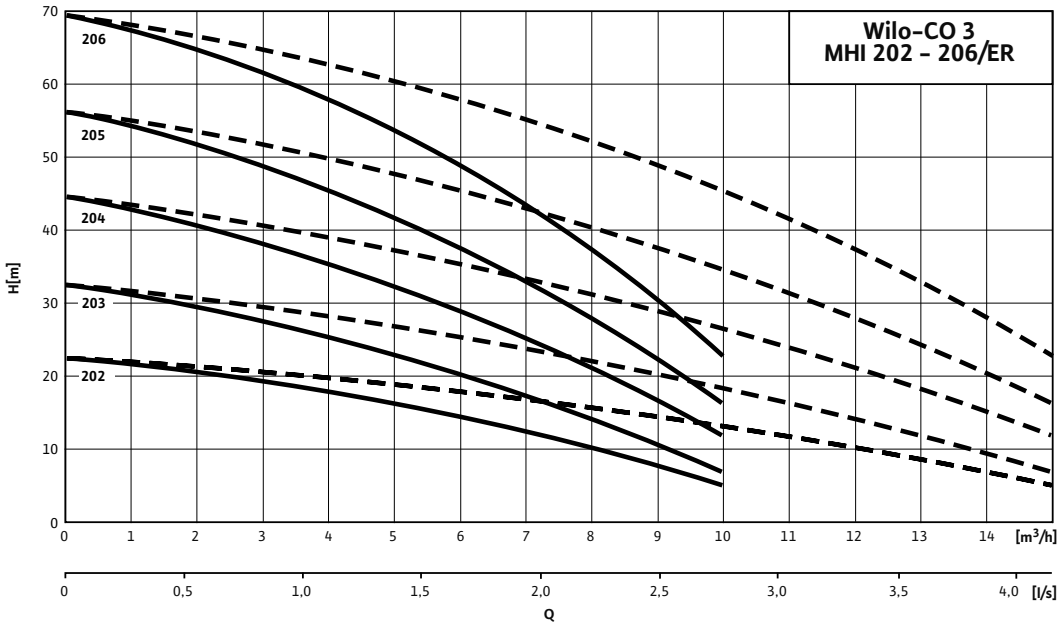

---- including standby pump

Motor data

Wilo-Economy CO-3...	Power consumption	Nominal motor power	Nominal current 3~230 V, 50 Hz	Nominal current 3~400 V, 50 Hz	Motor efficiency		
	P_1	P_2	I_N		$\eta_{m\,50\%}$	$\eta_{m\,75\%}$	$\eta_{m\,100\%}$
	kW		A		%		
MHI 202/ER	0.83	0.55	3	1.7	–	–	–
MHI 203/ER	0.83	0.55	3	1.7	–	–	–
MHI 204/ER	0.83	0.55	3	1.7	–	–	–
MHI 205/ER	1.11	0.75	3.3	1.91	76.0	77.4	77.4
MHI 206/ER	1.57	1.1	4.8	2.8	78.0	79.6	79.6

Motor efficiency based on 400 V, 50 Hz

Technical data Wilo-Economy CO-MHI.../ER

Dimension drawing

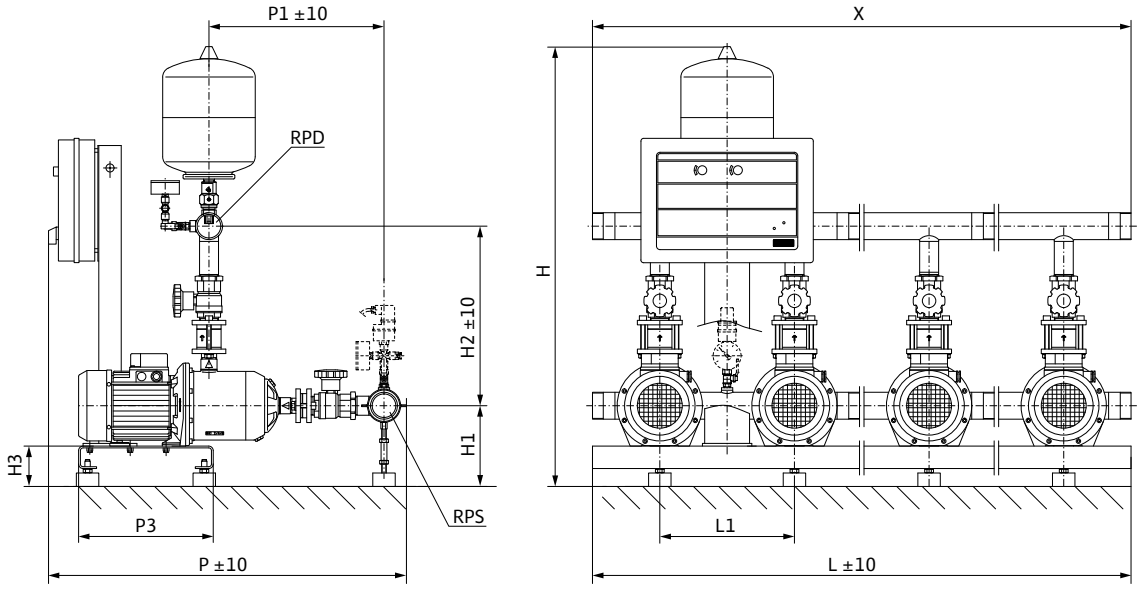

Sample systems are shown. Switchbox position depends on pump height.
Accessories (to be ordered separately): Optional WMS low-water cut-out switchgear kit
Installation surface: flat and horizontal
Installation location: dry, well ventilated and frost-proof

Dimensions, weights

Wilo-Economy CO-3...	Nominal diameters of the pipe connections on suction side	Nominal diameters of pipe connections on the pressure side	Dimensions										Weight approx.
	RPS	*RPD*	*L*	*L1*	*H*	*H1*	*H2*	*H3*	*P*	*P1*	*P3*	*X*	*m*
			mm										kg
MHI 202/ER	R 2	R 2	900	300	980	180	400	90	725	318	300	900	71
MHI 203/ER	R 2	R 2	900	300	980	180	400	90	725	318	300	900	71
MHI 204/ER	R 2	R 2	900	300	980	180	400	90	775	366	300	900	74
MHI 205/ER	R 2	R 2	900	300	980	180	400	90	775	366	300	900	80
MHI 206/ER	R 2	R 2	900	300	980	180	400	90	800	390	300	900	95

Technical data Wilo-Economy CO-MHI.../ER

Pump curves

Wilo-Economy CO-4 MHI 202-206/ER

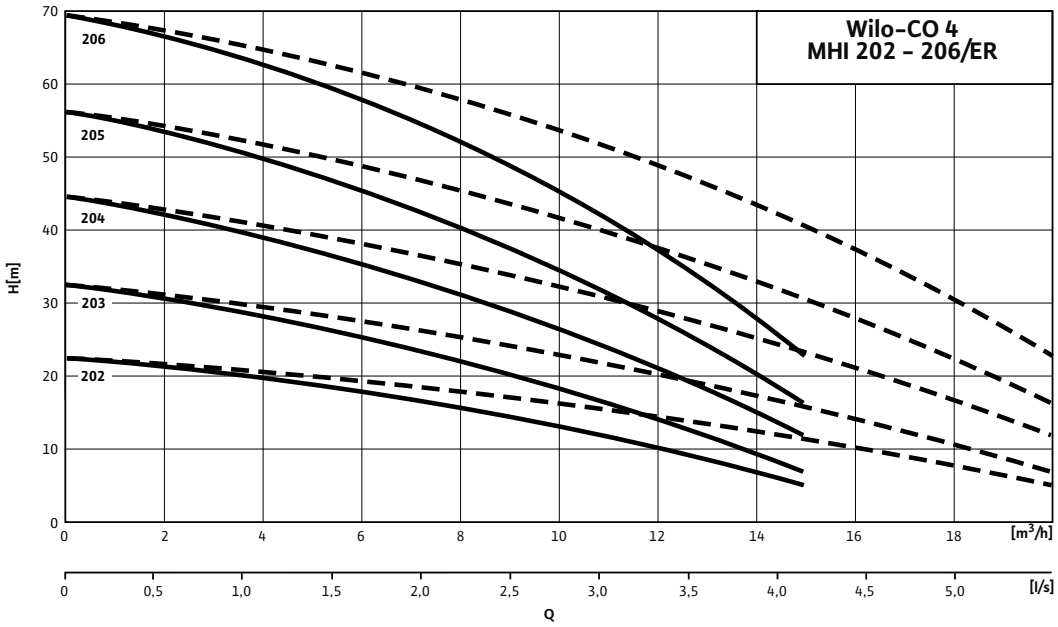

---- including standby pump

Motor data

Wilo-Economy CO-4...	Power consumption	Nominal motor power	Nominal current 3~230 V, 50 Hz	Nominal current 3~400 V, 50 Hz	Motor efficiency		
	P_1	P_2	I_N		$\eta_{m\,50\%}$	$\eta_{m\,75\%}$	$\eta_{m\,100\%}$
	kW		A		%		
MHI 202/ER	0.83	0.55	3	1.7	–	–	–
MHI 203/ER	0.83	0.55	3	1.7	–	–	–
MHI 204/ER	0.83	0.55	3	1.7	–	–	–
MHI 205/ER	1.11	0.75	3.3	1.91	76.0	77.4	77.4
MHI 206/ER	1.57	1.1	4.8	2.8	78.0	79.6	79.6

Motor efficiency based on 400 V, 50 Hz

Technical data Wilo-Economy CO-MHI.../ER

Dimension drawing

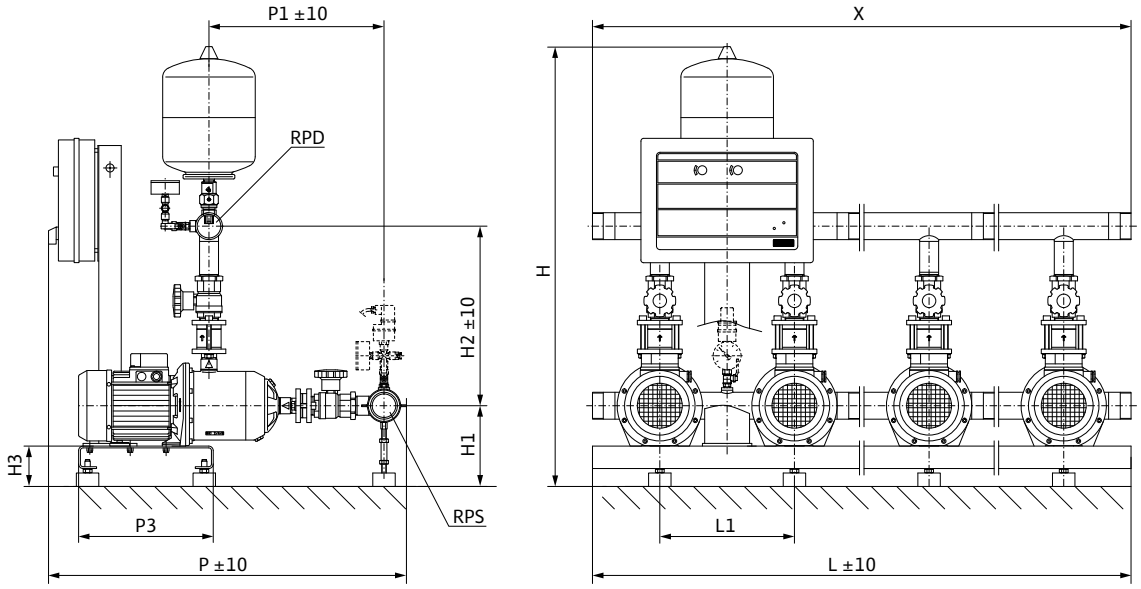

Sample systems are shown. Switchbox position depends on pump height.
Accessories (to be ordered separately): Optional WMS low-water cut-out switchgear kit
Installation surface: flat and horizontal
Installation location: dry, well ventilated and frost-proof

Dimensions, weights

Wilo-Economy CO-4...	Nominal diameters of the pipe connections on suction side	Nominal diameters of pipe connections on the pressure side	Dimensions										Weight approx.
	RPS	*RPD*	*L*	*L1*	*H*	*H1*	*H2*	*H3*	*P*	*P1*	*P3*	*X*	*m*
			mm										kg
MHI 202/ER	R 2	R 2	1200	300	980	180	400	90	725	318	300	1200	82
MHI 203/ER	R 2	R 2	1200	300	980	180	400	90	725	318	300	1200	82
MHI 204/ER	R 2	R 2	1200	300	980	180	400	90	775	366	300	1200	86
MHI 205/ER	R 2	R 2	1200	300	980	180	400	90	775	366	300	1200	94
MHI 206/ER	R 2	R 2	1200	300	980	180	400	90	800	390	300	1200	114

Technical data Wilo-Economy CO-MHI.../ER

Pump curves

Wilo-Economy CO-2 MHI 402-406/ER

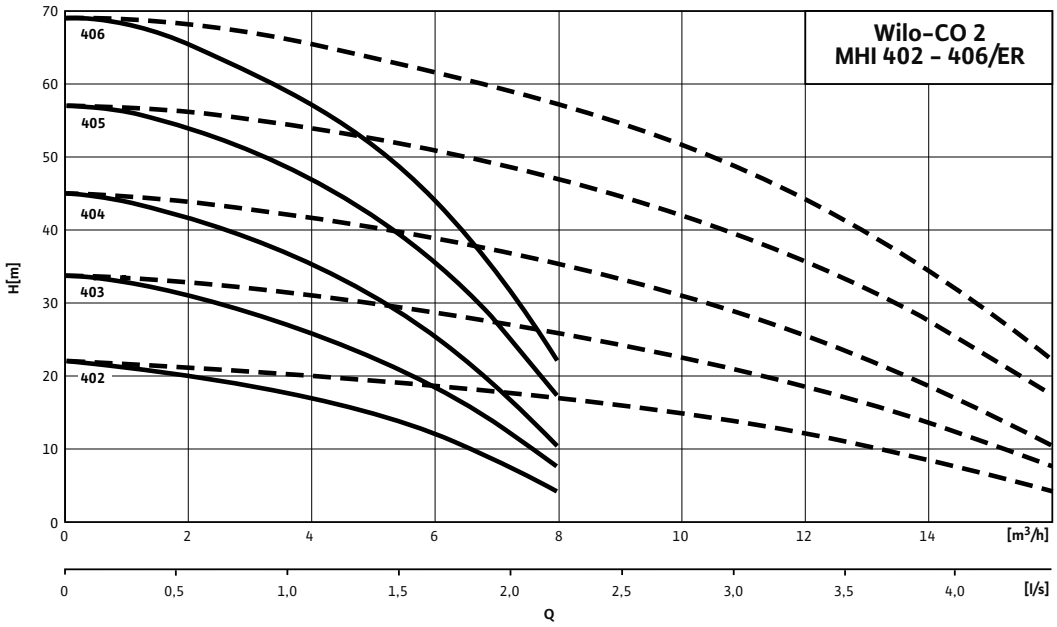

---- including standby pump

Motor data

Wilo-Economy CO-2...	Power consumption	Nominal motor power	Nominal current 3~230 V, 50 Hz	Nominal current 3~400 V, 50 Hz	Motor efficiency		
	P_1	P_2	I_N		$\eta_{m\,50\%}$	$\eta_{m\,75\%}$	$\eta_{m\,100\%}$
	kW		A		%		
MHI 402/ER	0.83	0.55	3	1.7	–	–	–
MHI 403/ER	0.83	0.55	3	1.7	–	–	–
MHI 404/ER	1.11	0.75	3.3	1.91	76.0	77.4	77.4
MHI 405/ER	1.57	1.1	4.8	2.8	78.0	79.6	79.6
MHI 406/ER	1.57	1.1	4.8	2.8	78.0	79.6	79.6

Motor efficiency based on 400 V, 50 Hz

Technical data Wilo-Economy CO-MHI.../ER

Dimension drawing

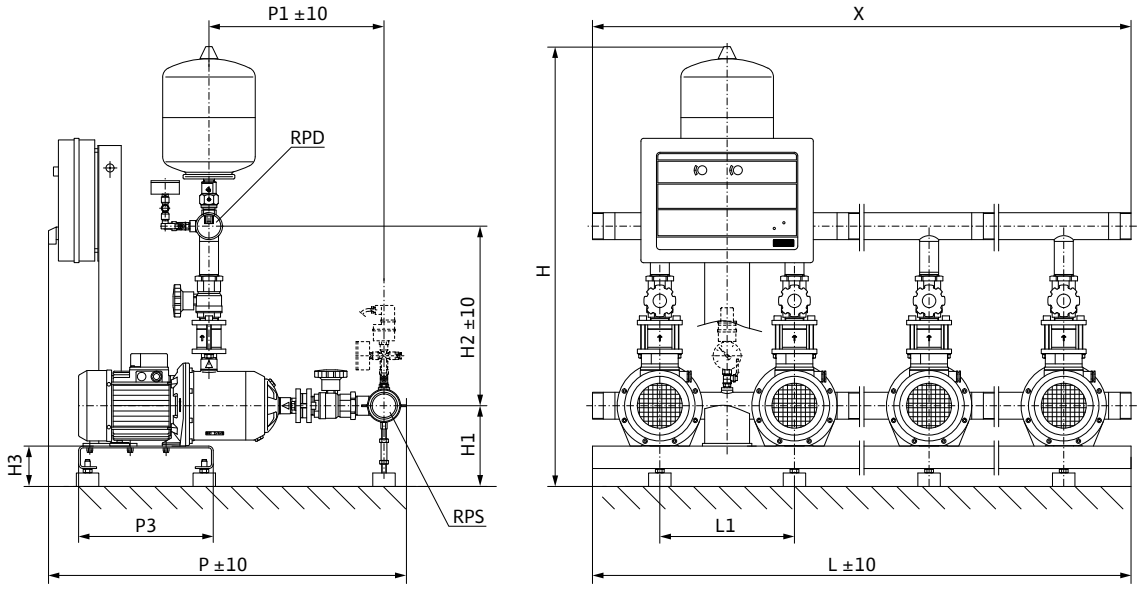

Sample systems are shown. Switchbox position depends on pump height.
Accessories (to be ordered separately): Optional WMS low-water cut-out switchgear kit
Installation surface: flat and horizontal
Installation location: dry, well ventilated and frost-proof

Dimensions, weights

Wilo-Economy CO-2...	Nominal diameters of the pipe connections on suction side	Nominal diameters of pipe connections on the pressure side	Dimensions										Weight approx.
	RPS	*RPD*	*L*	*L1*	*H*	*H1*	*H2*	*H3*	*P*	*P1*	*P3*	*X*	*m*
			mm										kg
MHI 402/ER	R 2	R 2	600	300	980	180	400	90	725	318	300	600	54
MHI 403/ER	R 2	R 2	600	300	980	180	400	90	725	318	300	600	58
MHI 404/ER	R 2½	R 2½	600	300	980	180	400	90	775	366	300	600	64
MHI 405/ER	R 2	R 2	600	300	980	180	400	90	775	366	300	600	68
MHI 406/ER	R 2	R 2	600	300	980	180	400	90	800	390	300	600	72

Technical data Wilo-Economy CO-MHI.../ER

Pump curves

Wilo-Economy CO-3 MHI 402-406/ER

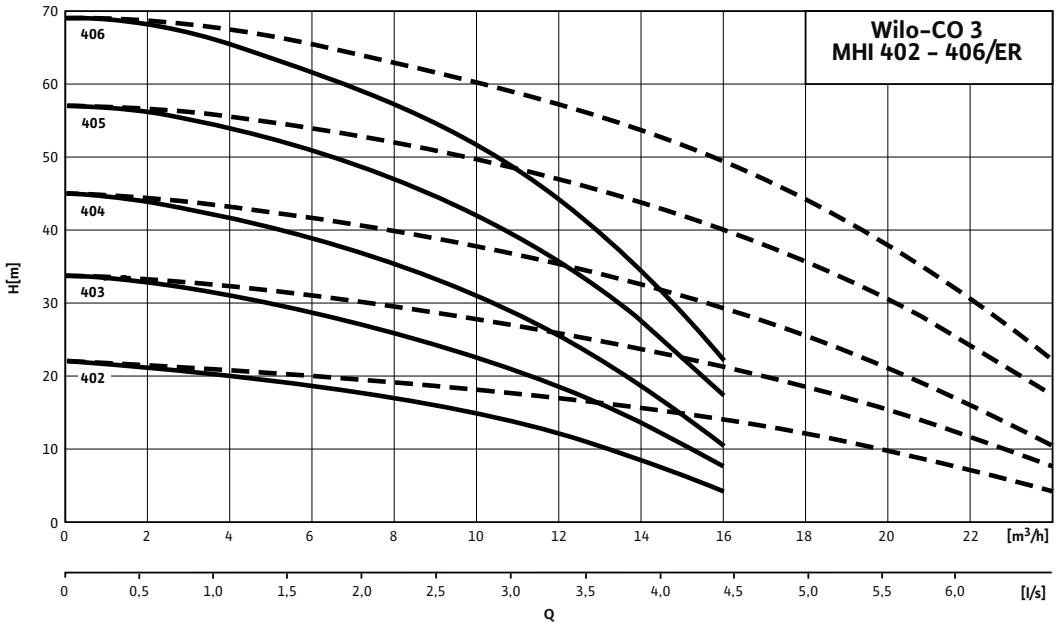

---- including standby pump

Motor data

Wilo-Economy CO-3...	Power consumption	Nominal motor power	Nominal current 3~230 V, 50 Hz	Nominal current 3~400 V, 50 Hz	Motor efficiency		
	P_1	P_2	I_N		$\eta_{m\,50\%}$	$\eta_{m\,75\%}$	$\eta_{m\,100\%}$
	kW		A		%		
MHI 402/ER	0.83	0.55	3	1.7	–	–	–
MHI 403/ER	0.83	0.55	3	1.7	–	–	–
MHI 404/ER	1.11	0.75	3.3	1.91	76.0	77.4	77.4
MHI 405/ER	1.57	1.1	4.8	2.8	78.0	79.6	79.6
MHI 406/ER	1.57	1.1	4.8	2.8	78.0	79.6	79.6

Motor efficiency based on 400 V, 50 Hz

Technical data Wilo-Economy CO-MHI.../ER

Dimension drawing

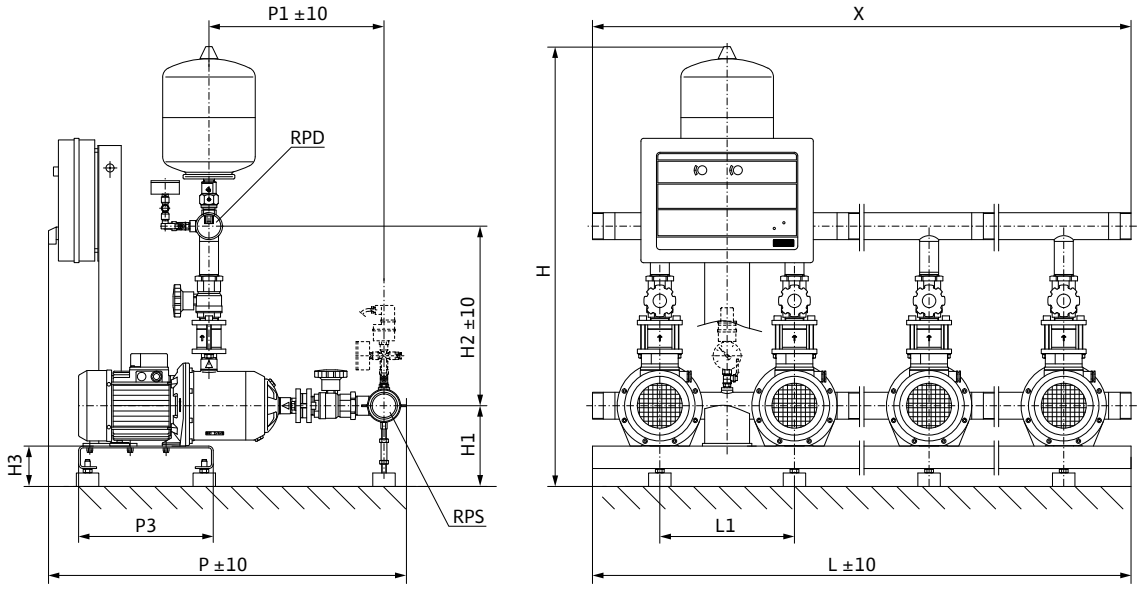

Sample systems are shown. Switchbox position depends on pump height.
Accessories (to be ordered separately): Optional WMS low-water cut-out switchgear kit
Installation surface: flat and horizontal
Installation location: dry, well ventilated and frost-proof

Dimensions, weights

Wilo-Economy CO-3...	Nominal diameters of the pipe connections on suction side	Nominal diameters of pipe connections on the pressure side	Dimensions										Weight approx.
	RPS	*RPD*	*L*	*L1*	*H*	*H1*	*H2*	*H3*	*P*	*P1*	*P3*	*X*	*m*
			mm										kg
MHI 402/ER	R 2	R 2	900	300	980	180	400	90	725	318	300	900	77
MHI 403/ER	R 2	R 2	900	300	980	180	400	90	725	318	300	900	83
MHI 404/ER	R 2½	R 2½	900	300	980	180	400	90	775	366	300	900	91
MHI 405/ER	R 2	R 2	900	300	980	180	400	90	775	366	300	900	98
MHI 406/ER	R 2	R 2	900	300	980	180	400	90	800	390	300	900	104

Technical data Wilo-Economy CO-MHI.../ER

Pump curves

Wilo-Economy CO-4 MHI 402-406/ER

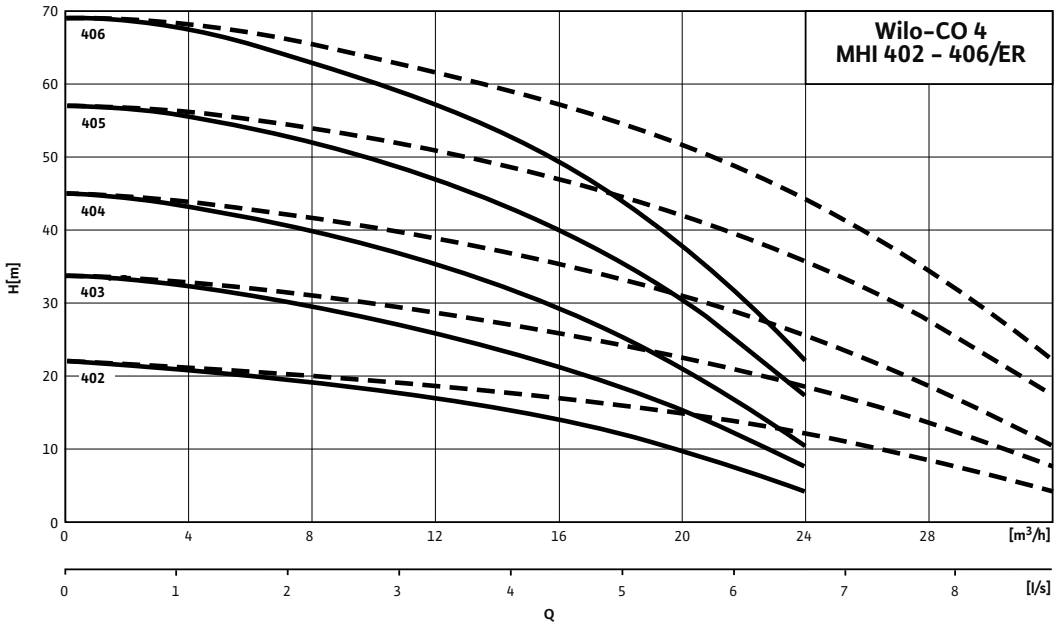

---- including standby pump

Motor data							
Wilo-Economy CO-4...	**Power consumption**	**Nominal motor power**	**Nominal current 3~230 V, 50 Hz**	**Nominal current 3~400 V, 50 Hz**	**Motor efficiency**		
	P_1	P_2	I_N		$\eta_{m\,50\%}$	$\eta_{m\,75\%}$	$\eta_{m\,100\%}$
	kW		A		%		
MHI 402/ER	0.83	0.55	3	1.7	–	–	–
MHI 403/ER	0.83	0.55	3	1.7	–	–	–
MHI 404/ER	1.11	0.75	3.3	1.91	76.0	77.4	77.4
MHI 405/ER	1.57	1.1	4.8	2.8	78.0	79.6	79.6
MHI 406/ER	1.57	1.1	4.8	2.8	78.0	79.6	79.6

Motor efficiency based on 400 V, 50 Hz

Technical data Wilo-Economy CO-MHI.../ER

Dimension drawing

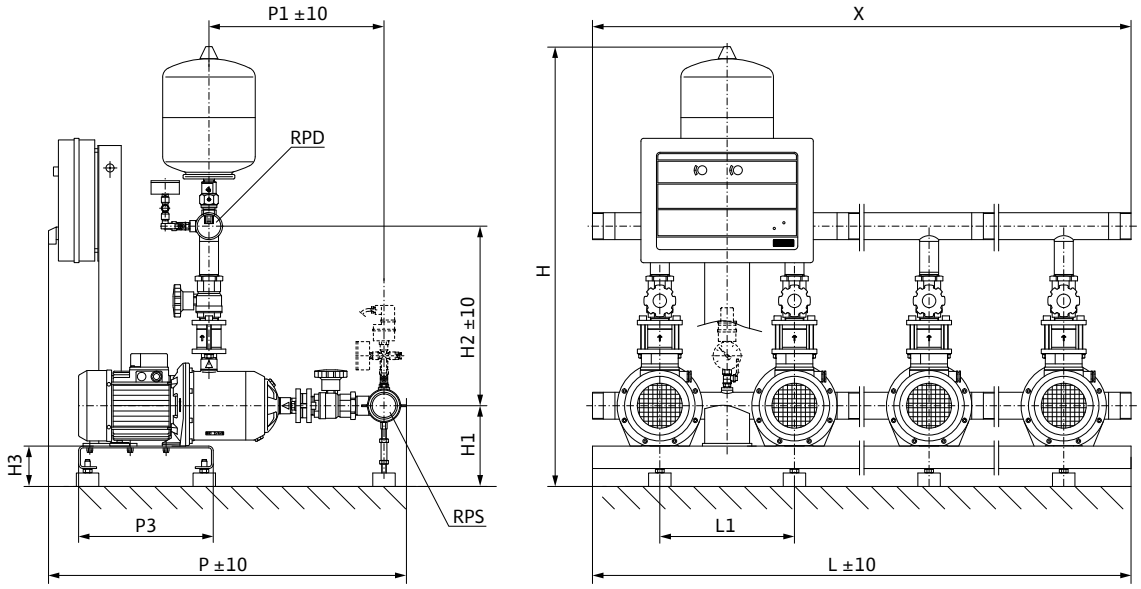

Sample systems are shown. Switchbox position depends on pump height.
Accessories (to be ordered separately): Optional WMS low-water cut-out switchgear kit
Installation surface: flat and horizontal
Installation location: dry, well ventilated and frost-proof

Dimensions, weights

Wilo-Economy CO-4...	Nominal diameters of the pipe connections on suction side	Nominal diameters of pipe connections on the pressure side	Dimensions										Weight approx.
	RPS	*RPD*	*L*	*L1*	*H*	*H1*	*H2*	*H3*	*P*	*P1*	*P3*	*X*	*m*
			mm										kg
MHI 402/ER	R 2½	R 2½	1200	300	1000	180	410	90	745	328	300	1200	90
MHI 403/ER	R 2½	R 2½	1200	300	1000	180	410	90	745	328	300	1200	98
MHI 404/ER	R 2½	R 2½	1200	300	1000	180	410	90	795	376	300	1200	109
MHI 405/ER	R 2½	R 2½	1200	300	1000	180	410	90	795	376	300	1200	118
MHI 406/ER	R 2½	R 2½	1200	300	1000	180	410	90	820	400	300	1200	125

Technical data Wilo-Economy CO-MHI.../ER

Pump curves

Wilo-Economy CO-2 MHI 802-805/ER

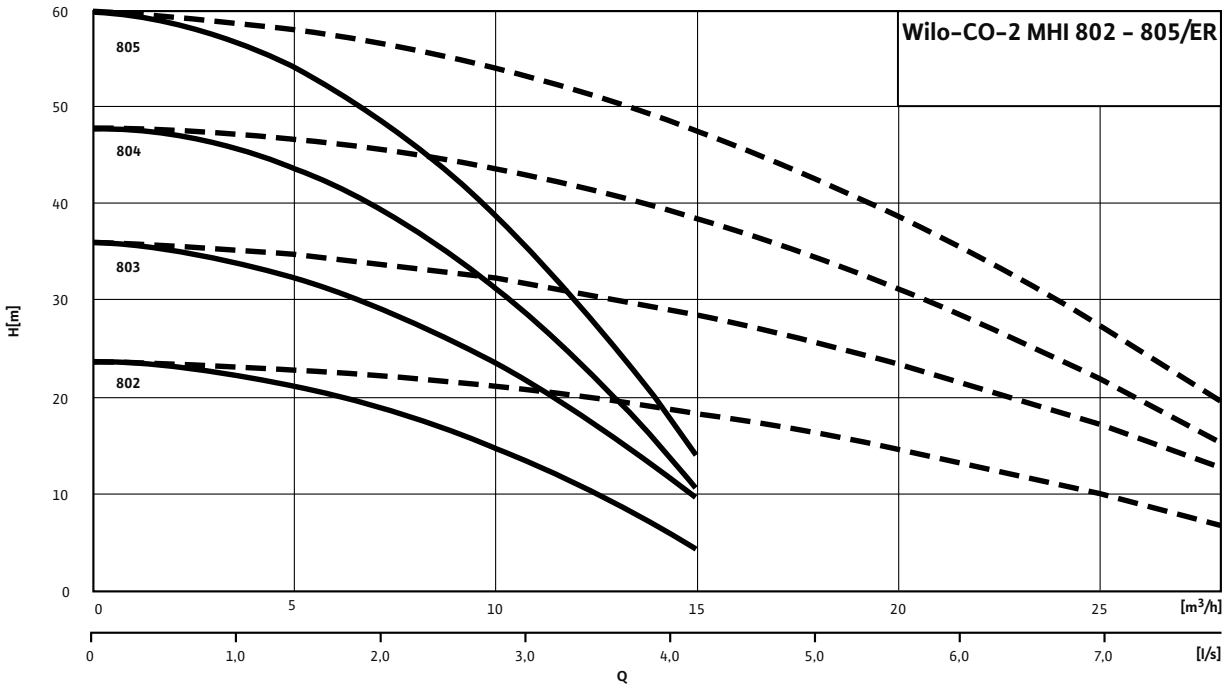

---- including standby pump

Motor data

Wilo-Economy CO-2...	Power consumption	Nominal motor power	Nominal current 3~230 V, 50 Hz	Nominal current 3~400 V, 50 Hz	Motor efficiency		
	P_1	P_2	I_N		$\eta_{m\,50\%}$	$\eta_{m\,75\%}$	$\eta_{m\,100\%}$
	kW		A		%		
MHI 802/ER	1.11	0.75	3.3	1.91	76.0	77.4	77.4
MHI 803/ER	1.57	1.1	4.8	2.8	78.0	79.6	79.6
MHI 804/ER	2.07	1.5	6.4	3.7	80.0	81.3	81.3
MHI 805/ER	2.97	2.2	9	5.2	82.0	83.2	83.2

Motor efficiency based on 400 V, 50 Hz

Technical data Wilo-Economy CO-MHI.../ER

Dimension drawing

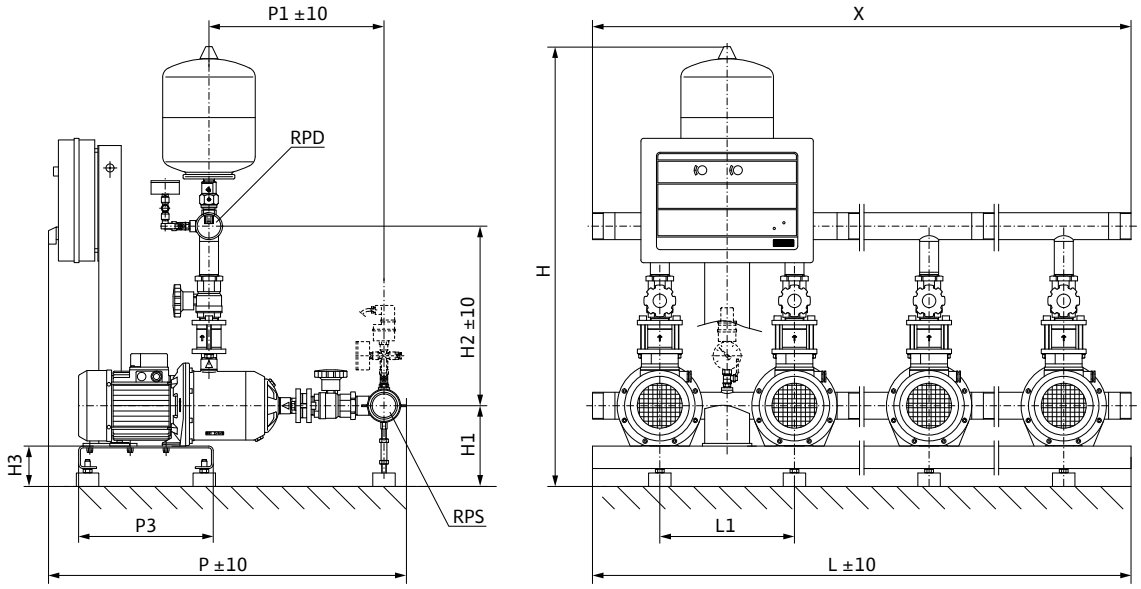

Sample systems are shown. Switchbox position depends on pump height.
Accessories (to be ordered separately): Optional WMS low-water cut-out switchgear kit
Installation surface: flat and horizontal
Installation location: dry, well ventilated and frost-proof

Dimensions, weights

Wilo-Economy CO-2...	Nominal diameters of the pipe connections on suction side	Nominal diameters of pipe connections on the pressure side	Dimensions										Weight approx.
	RPS	*RPD*	*L*	*L1*	*H*	*H1*	*H2*	*H3*	*P*	*P1*	*P3*	*X*	*m*
			mm										kg
MHI 802/ER	R 2½	R 2½	600	300	1000	180	410	90	760	360	300	600	65
MHI 803/ER	R 2½	R 2½	600	300	1000	180	410	90	760	360	300	600	73
MHI 804/ER	R 2½	R 2½	600	300	1000	180	410	90	820	400	300	600	75
MHI 805/ER	R 2½	R 2½	600	300	1000	180	410	90	820	400	300	600	136

Technical data Wilo-Economy CO-MHI.../ER

Pump curves

Wilo-Economy CO-3 MHI 802-805/ER

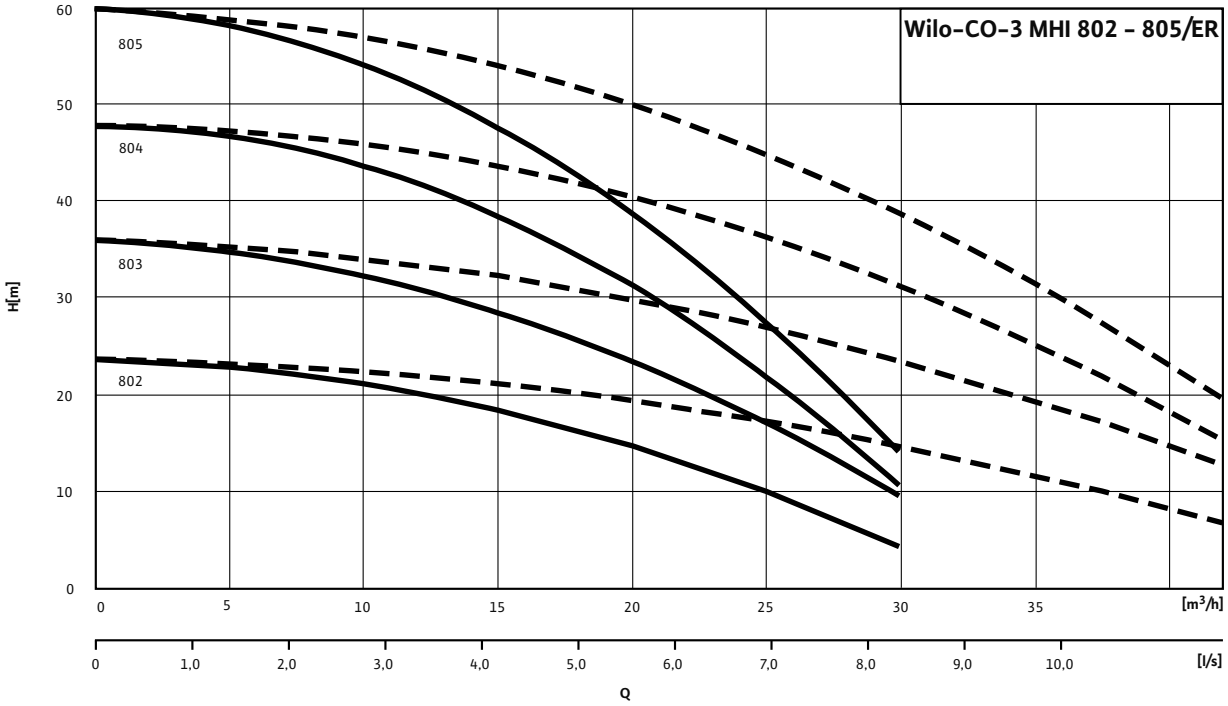

---- including standby pump

Motor data

Wilo-Economy CO-3...	Power consumption	Nominal motor power	Nominal current 3~230 V, 50 Hz	Nominal current 3~400 V, 50 Hz	Motor efficiency		
	P_1	P_2	I_N		$\eta_{m\,50\%}$	$\eta_{m\,75\%}$	$\eta_{m\,100\%}$
	kW		A		%		
MHI 802/ER	1.11	0.75	3.3	1.91	76.0	77.4	77.4
MHI 803/ER	1.57	1.1	4.8	2.8	78.0	79.6	79.6
MHI 804/ER	2.07	1.5	6.4	3.7	80.0	81.3	81.3
MHI 805/ER	2.97	2.2	9	5.2	82.0	83.2	83.2

Motor efficiency based on 400 V, 50 Hz

Technical data Wilo-Economy CO-MHI.../ER

Dimension drawing

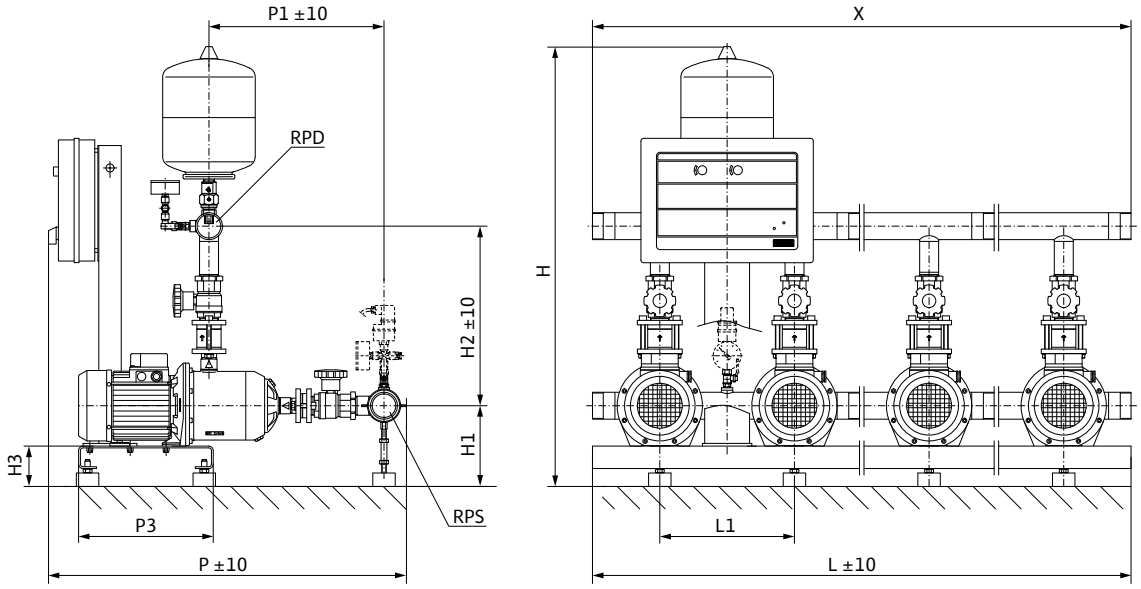

Sample systems are shown. Switchbox position depends on pump height.
Accessories (to be ordered separately): Optional WMS low-water cut-out switchgear kit
Installation surface: flat and horizontal
Installation location: dry, well ventilated and frost-proof

Dimensions, weights

Wilo-Economy CO-3...	Nominal diameters of the pipe connections on suction side	Nominal diameters of pipe connections on the pressure side	Dimensions										Weight approx.
	RPS	*RPD*	*L*	*L1*	*H*	*H1*	*H2*	*H3*	*P*	*P1*	*P3*	*X*	*m*
			mm										kg
MHI 802/ER	R 2½	R 2½	900	300	1000	180	410	90	760	360	300	900	94
MHI 803/ER	R 2½	R 2½	900	300	1000	180	410	90	760	360	300	900	106
MHI 804/ER	R 2½	R 2½	900	300	1000	180	410	90	820	400	300	900	109
MHI 805/ER	R 2½	R 2½	900	300	1000	180	410	90	820	400	300	900	144

Technical data Wilo-Economy CO-MHI.../ER

Pump curves

Wilo-Economy CO-4 MHI 802-805/ER

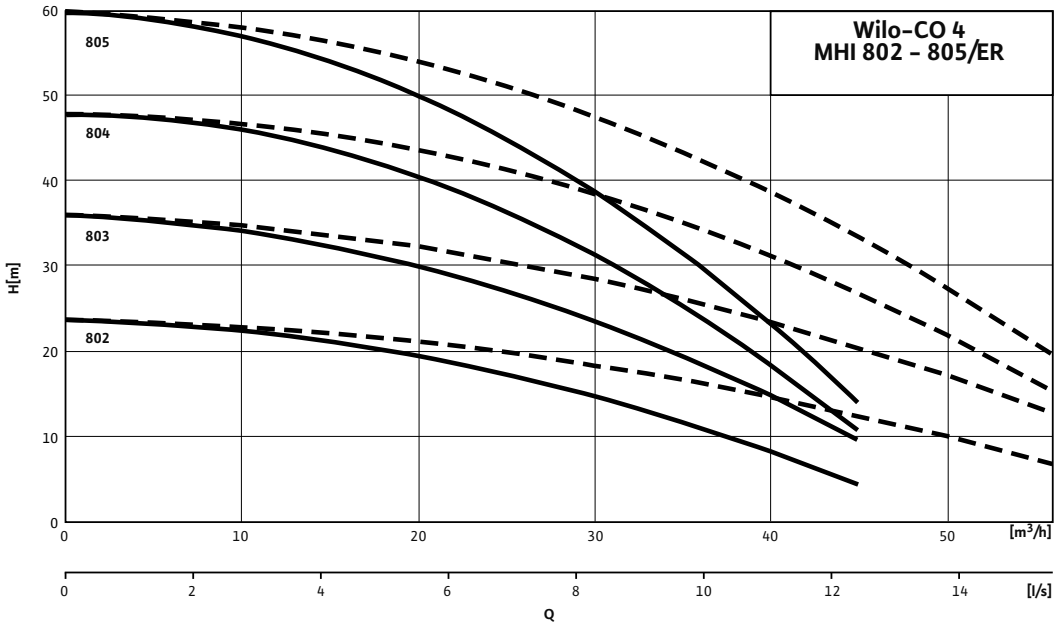

---- including standby pump

Motor data

Wilo-Economy CO-4...	Power consumption	Nominal motor power	Nominal current 3~230 V, 50 Hz	Nominal current 3~400 V, 50 Hz	Motor efficiency		
	P_1	P_2	I_N		$\eta_{m\,50\%}$	$\eta_{m\,75\%}$	$\eta_{m\,100\%}$
	kW		A		%		
MHI 802/ER	1.11	0.75	3.3	1.91	76.0	77.4	77.4
MHI 803/ER	1.57	1.1	4.8	2.8	78.0	79.6	79.6
MHI 804/ER	2.07	1.5	6.4	3.7	80.0	81.3	81.3
MHI 805/ER	2.97	2.2	9	5.2	82.0	83.2	83.2

Motor efficiency based on 400 V, 50 Hz

Technical data Wilo-Economy CO-MHI.../ER

Dimension drawing

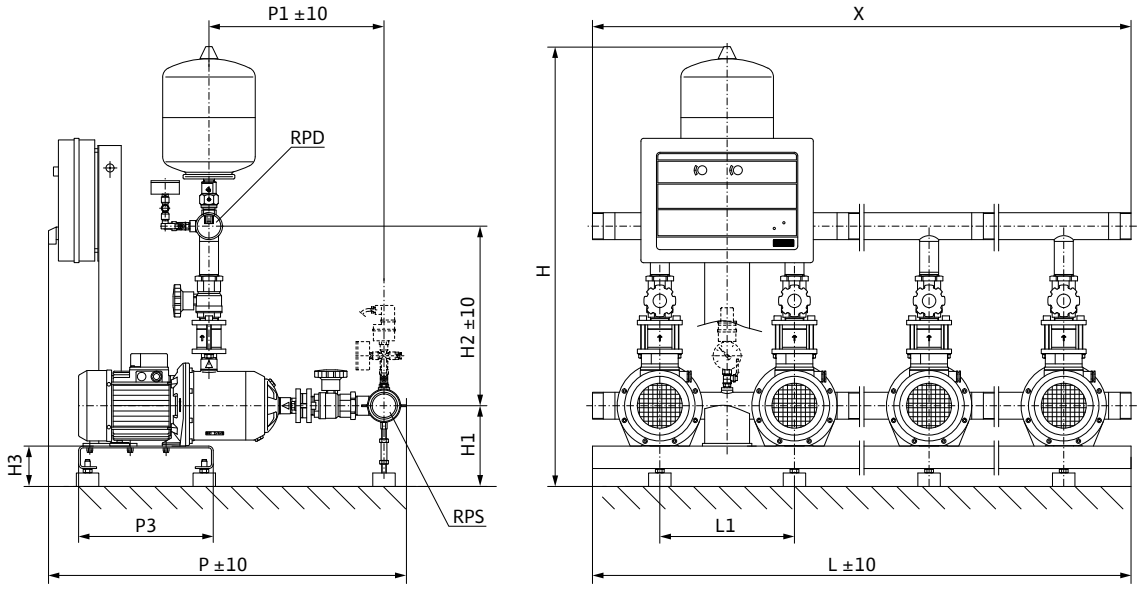

Sample systems are shown. Switchbox position depends on pump height.
Accessories (to be ordered separately): Optional WMS low-water cut-out switchgear kit
Installation surface: flat and horizontal
Installation location: dry, well ventilated and frost-proof

Dimensions, weights

Wilo-Economy CO-4...	Nominal diameters of the pipe connections on suction side	Nominal diameters of pipe connections on the pressure side	Dimensions										Weight approx.
	RPS	*RPD*	*L*	*L1*	*H*	*H1*	*H2*	*H3*	*P*	*P1*	*P3*	*X*	*m*
			mm										kg
MHI 802/ER	R 2½	R 2½	1200	300	1000	180	410	90	760	360	300	1200	113
MHI 803/ER	R 2½	R 2½	1200	300	1000	180	410	90	760	360	300	1200	129
MHI 804/ER	R 2½	R 2½	1200	300	1000	180	410	90	820	400	300	1200	133
MHI 805/ER	R 2½	R 2½	1200	300	1000	180	410	90	820	400	300	1200	164

Technical data Wilo-Economy CO-MHI.../ER

Pump curves

Wilo-Economy CO-2 MHI 1602-1604/ER

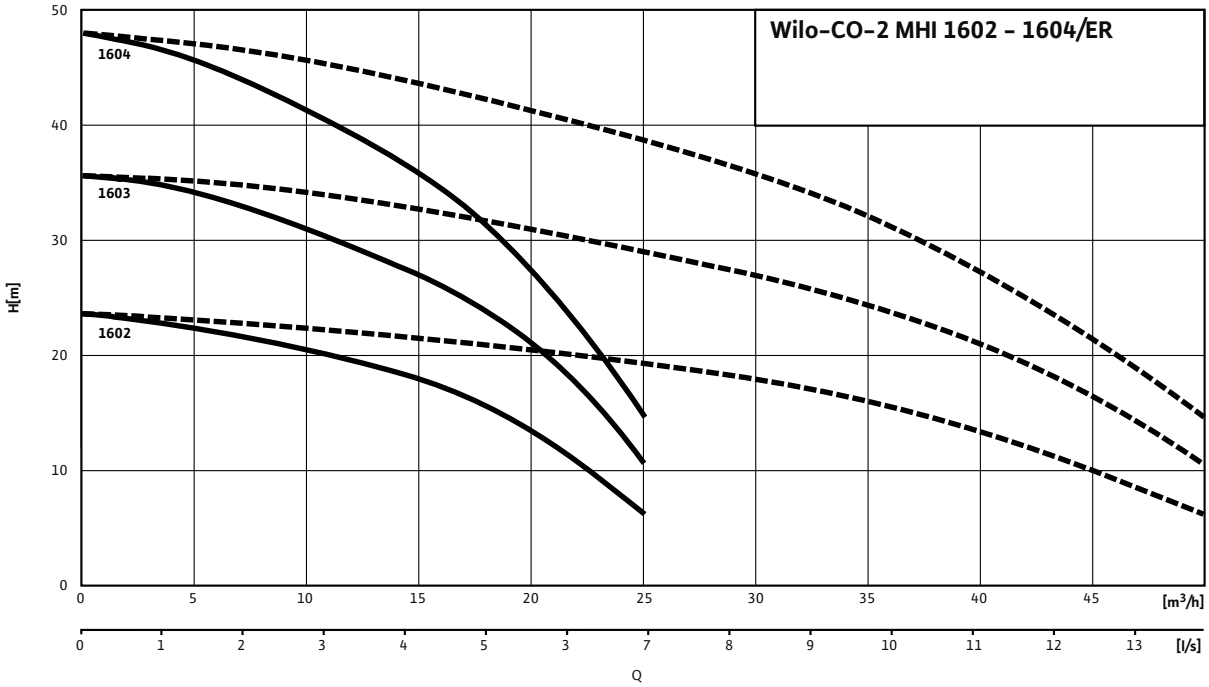

---- including standby pump

Motor data

Wilo-Economy CO-2...	Power consumption	Nominal motor power	Nominal current 3~230 V, 50 Hz	Nominal current 3~400 V, 50 Hz	Motor efficiency		
	P_1	P_2	I_N		$\eta_{m\,50\%}$	$\eta_{m\,75\%}$	$\eta_{m\,100\%}$
	kW		A		%		
MHI 1602/ER	2.07	1.5	6.4	3.7	80.0	81.3	81.3
MHI 1603/ER	2.97	2.2	9	5.2	82.0	83.2	83.2
MHI 1604/ER	2.97	2.2	9	5.2	82.0	83.2	83.2

Motor efficiency based on 400 V, 50 Hz

Technical data Wilo-Economy CO-MHI.../ER

Dimension drawing

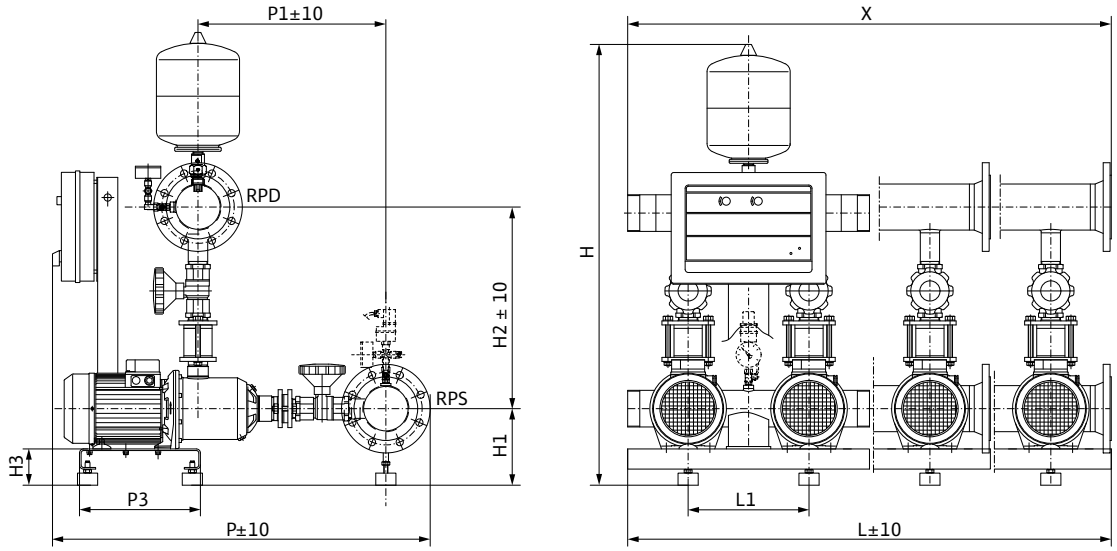

Sample systems are shown. Switchbox position depends on pump height.
Accessories (to be ordered separately): Optional WMS low-water cut-out switchgear kit
Installation surface: flat and horizontal
Installation location: dry, well ventilated and frost-proof

Dimensions, weights

Wilo-Economy CO-2...	Nominal diameters of the pipe connections on suction side	Nominal diameters of pipe connections on the pressure side	Dimensions										Weight approx.
	RPS	*RPD*	*L*	*L1*	*H*	*H1*	*H2*	*H3*	*P*	*P1*	*P3*	*X*	*m*
			mm										kg
MHI 1602/ER	R 3	R 3	600	300	1085	180	485	90	815	410	300	600	114
MHI 1603/ER	R 3	R 3	600	300	1085	180	485	90	815	410	300	600	119
MHI 1604/ER	R 3	R 3	600	300	1085	180	485	90	860	455	300	600	126

Technical data Wilo-Economy CO-MHI.../ER

Pump curves

Wilo-Economy CO-3 MHI 1602-1604/ER

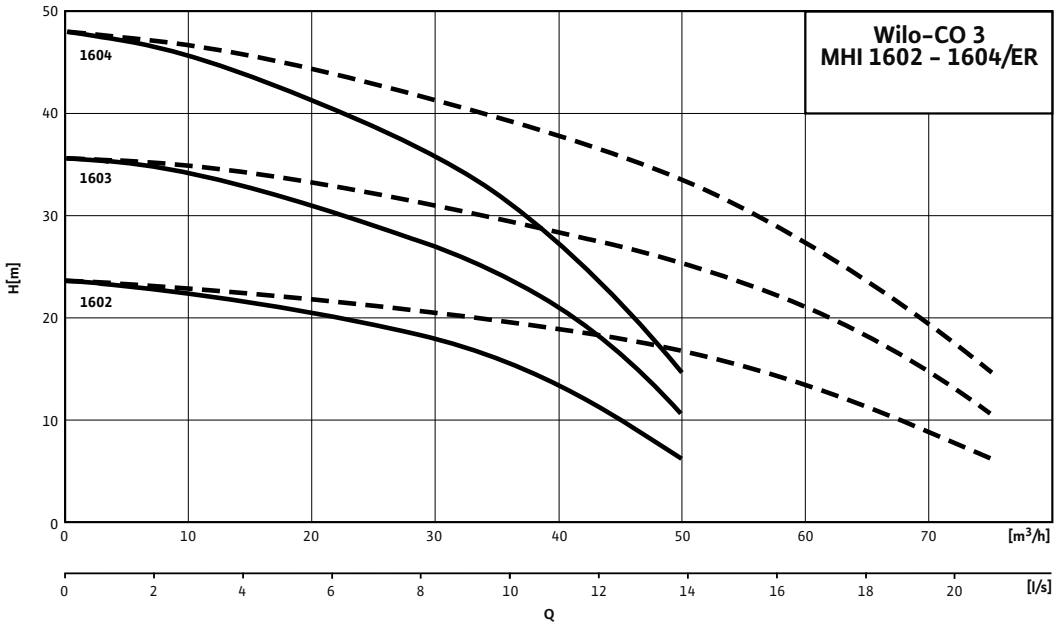

---- including standby pump

Motor data							
Wilo-Economy CO-3...	**Power consumption**	**Nominal motor power**	**Nominal current 3~230 V, 50 Hz**	**Nominal current 3~400 V, 50 Hz**	**Motor efficiency**		
	P_1	P_2	I_N		$\eta_{m\,50\%}$	$\eta_{m\,75\%}$	$\eta_{m\,100\%}$
	kW		A		%		
MHI 1602/ER	2.07	1.5	6.4	3.7	80.0	81.3	81.3
MHI 1603/ER	2.97	2.2	9	5.2	82.0	83.2	83.2
MHI 1604/ER	2.97	2.2	9	5.2	82.0	83.2	83.2

Motor efficiency based on 400 V, 50 Hz

Technical data Wilo-Economy CO-MHI.../ER

Dimension drawing

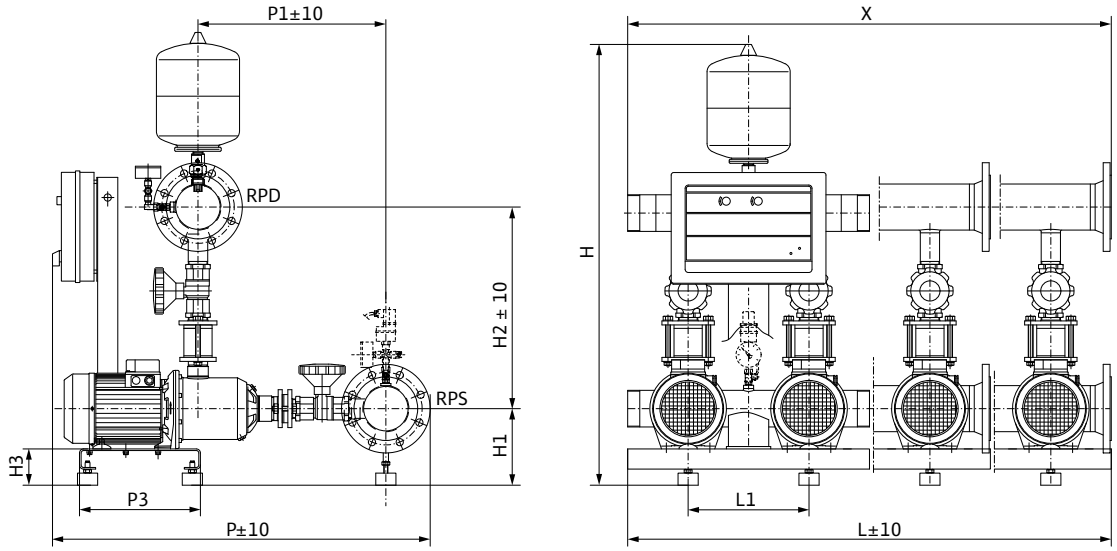

Sample systems are shown. Switchbox position depends on pump height.
Accessories (to be ordered separately): Optional WMS low-water cut-out switchgear kit
Installation surface: flat and horizontal
Installation location: dry, well ventilated and frost-proof

Dimensions, weights

Wilo-Economy CO-3...	Nominal diameters of the pipe connections on suction side	Nominal diameters of pipe connections on the pressure side	Dimensions										Weight approx.
	RPS	*RPD*	*L*	*L1*	*H*	*H1*	*H2*	*H3*	*P*	*P1*	*P3*	*X*	*m*
			mm										kg
MHI 1602/ER	DN 100	DN 100	900	300	1115	180	500	90	895	425	300	900	152
MHI 1603/ER	DN 100	DN 100	900	300	1115	180	500	90	895	425	300	900	158
MHI 1604/ER	DN 100	DN 100	900	300	1115	180	500	90	940	470	300	900	169

Technical data Wilo-Economy CO-MHI.../ER

Pump curves

Wilo-Economy CO-4 MHI 1602-1604/ER

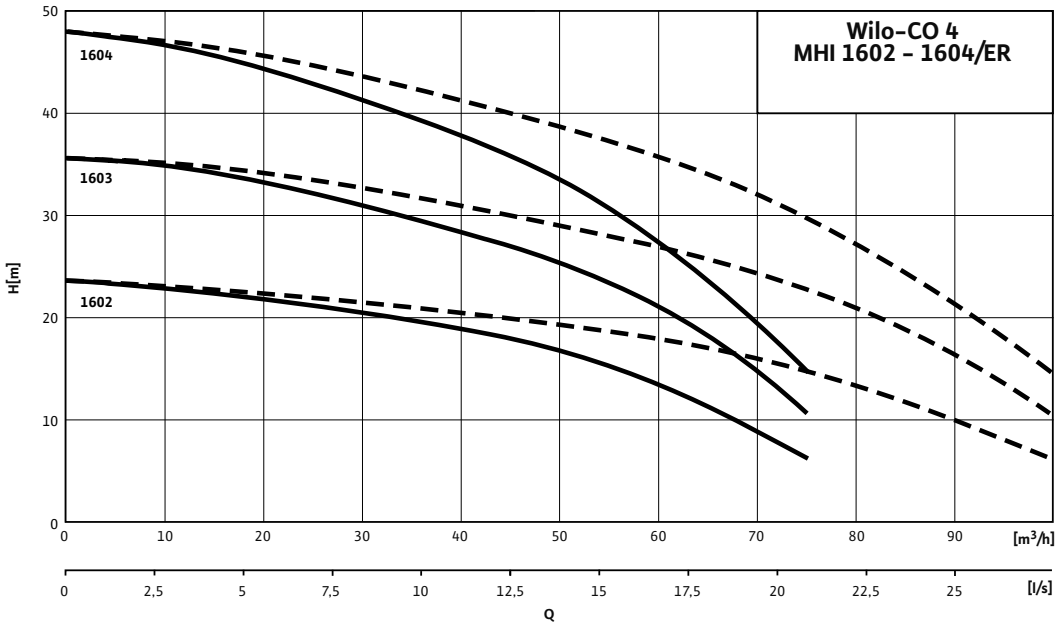

---- including standby pump

Motor data

Wilo-Economy CO-4...	Power consumption	Nominal motor power	Nominal current 3~230 V, 50 Hz	Nominal current 3~400 V, 50 Hz	Motor efficiency		
	P_1	P_2	I_N		$\eta_{m\,50\%}$	$\eta_{m\,75\%}$	$\eta_{m\,100\%}$
	kW		A		%		
MHI 1602/ER	2.07	1.5	6.4	3.7	80.0	81.3	81.3
MHI 1603/ER	2.97	2.2	9	5.2	82.0	83.2	83.2
MHI 1604/ER	2.97	2.2	9	5.2	82.0	83.2	83.2

Motor efficiency based on 400 V, 50 Hz

Technical data Wilo-Economy CO-MHI.../ER

Dimension drawing

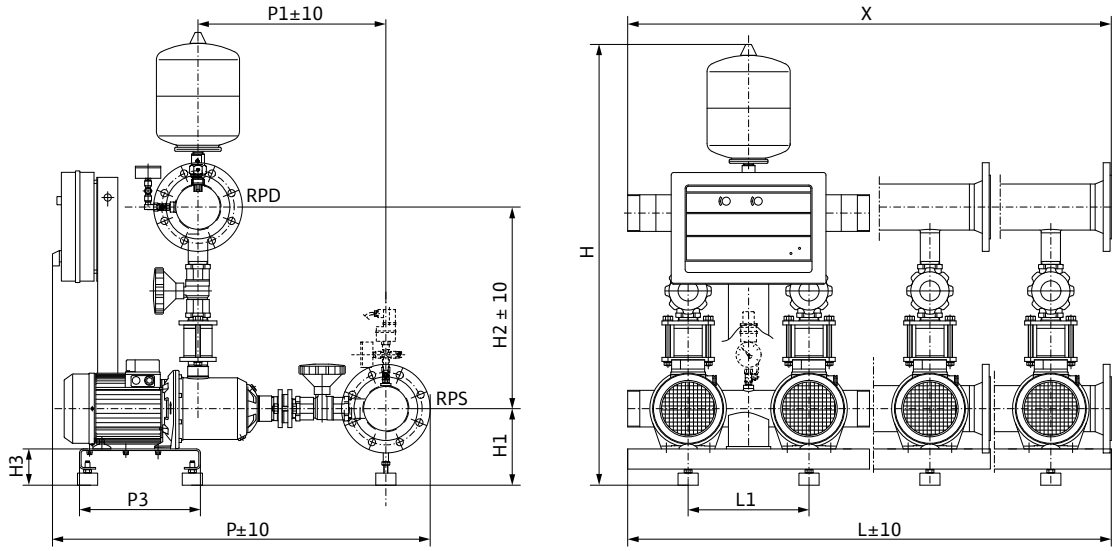

Sample systems are shown. Switchbox position depends on pump height.
Accessories (to be ordered separately): Optional WMS low-water cut-out switchgear kit
Installation surface: flat and horizontal
Installation location: dry, well ventilated and frost-proof

Dimensions, weights

Wilo-Economy CO-4...	Nominal diameters of the pipe connections on suction side	Nominal diameters of pipe connections on the pressure side	Dimensions										Weight approx.
	RPS	*RPD*	*L*	*L1*	*H*	*H1*	*H2*	*H3*	*P*	*P1*	*P3*	*X*	*m*
			mm										kg
MHI 1602/ER	DN 100	DN 100	1200	300	1115	180	500	90	895	425	300	1200	189
MHI 1603/ER	DN 100	DN 100	1200	300	1115	180	500	90	895	425	300	1200	198
MHI 1604/ER	DN 100	DN 100	1200	300	1115	180	500	90	940	470	300	1200	212

Structure and function description Wilo-Economy-Controller CE+

Wilo-Economy-Controller CE+

Electronic central control unit, protection class IP 54, fitted with main switch and pump control switch with the functions [Manual (time-sensitive resetting)] - [0] - [Automatic] as well as display/monitoring LEDs for the low-water function and running/fault for each pump and setpoint display on the alphanumeric screen.

Equipment/function

- Electronic control, main switch, pump selection switch with the functions [Manual (time-sensitive resetting)]- [0] - [Automatic].
- Depending on the motor power to be connected, direct starting or Y/Δ starting
- Control via electronic pressure sensor 4 – 20 mA. Pressure adjustment by means of 2 potentiometers.
- Switch-off delay for pump can be adjusted between 5 and 180 using potentiometer. Setting display on the screen during the adjustment process.
- Low-water cut-out:
  control by means of pressure switch or float switch with potential-free contacts.
- Low-water cut-out follow-up time:
  fixed value ~20 s; Pump reactivation follow-up time: ~6 s fixed value
- Motor protection:
  via built-in motor protection switch
- Test run:
  After 6 h for 15 s. Function can be switched on and off using DIP switches.
- Pipe burst monitoring:
  automatic deactivation of the system after 60 s if the switch-on pressure does not reach at least 20% of the set level.
- External On/Off:
  via separate input on line-up terminals by means of BMS, for example
- Phase failure protection:
  automatic monitoring of the phases. If one or more phases in the power supply are missing, the system is automatically deactivated.
- Electronics:
  emitted interference EN 61000-6-2
  interference resistance EN 61000-6-3
- Pressure sensor:
  necessary control signal 4-20 mA, can be connected via line-up terminals.
  Following sensor pressure ranges can be used:
  0-6 bar; 0-10 bar; 0-16 bar; 0-25 bar;
  0-40 bar. Selection is possible via potentiometer.
- Control voltage 24 V via transformer
  power supply 230 V/400 V selectable via voltage selection switch.
- Supply voltage:
  power supply via line-up terminals
  3 ~ 230 V / 400 V +/- 10% 50 Hz
  3 ~ 220 V / 380 V +/- 10% 60 Hz
- Protection class: IP 54
- Housing:
  either plastic housing or steel sheet housing, depending on output.

Signals:

- Direct on the switchgear via LEDs and display screen
- Power supply on
- Low water
- Pump running/fault
- Phase failure
- Pipe burst
- Pressure sensor cable break
- Test run fault
- Permanent set pressure display on screen

Remote signal: collective fault signal (SSM) via potential-free contacts

Functional description

The pressure boosting system Wilo-Economy CO-1 Helix V 22.. / CE+ is controlled and monitored by means of the Economy-Controller CE+ in conjunction with the pressure and level sensors. The system is switched on and off according to pressure fluctuations within the selected pressure level in order to meet water requirements. The pump is switched on without a delay if the pressure falls below the switch-on level p ON (Plo). Once the switch-off pressure level p OFF (phi) has been reached and the switch-off time delay has expired (this can be adjusted between 5 and 180 s by potentiometer), the system switches off with almost Q = 0 m³/h. As a result, pressure surges or unnecessary switching on and off of the system for minimal extraction amounts are reduced to the greatest extent possible. If at least 20 % of the set switch-on pressure is not reached during system operation (pipe burst) then the system is switched off automatically after the time delay of 60 s has expired.

td=	Switch-off time delay
p_{OFF}=	Switch-off pressure level
p_{ON}=	Switch-on pressure level
p_{Burst}=	Pressure level Pipe break monitoring

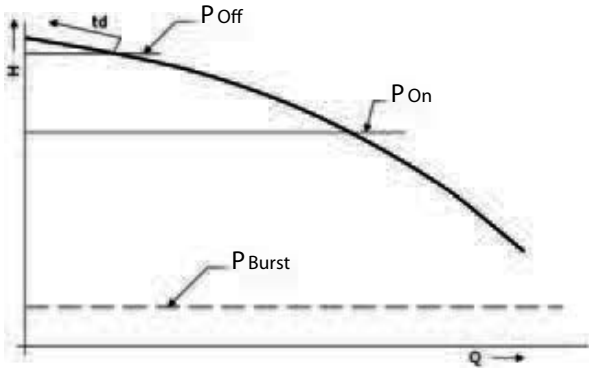

Structure and function description Wilo-Economy-Controller ER1

Wilo-Economy-Controller ER1
Fully electronic central control unit, protection class IP41, fitted with main switch and pump control switch with the functions [Manual (time-sensitive resetting)] – [0] – [Automatic] and display/monitoring LEDs for the low-water function and running/fault for each pump, direct-on-line starting up to and including 4 kW motor power (at 400 V/50 Hz). From 5.5 kW Y/Δ start.

Equipment/function
Fully electronic control, main switch, selector switch with [Manual (time-sensitive resetting)] – [0] – [Automatic] functions.
Control via external pressure switch:
Switch-on level p_{On}
Switch-off pressure level p_{Off}

Run-on time/ switch-off delay time for the pump:
By potentiometer, can be set between 8 and 120 s if the switch-off pressure level is reached on the external pressure switch.

Low-water cut-out:
Control either by pressure switch on the suction side, immersion electrodes or float switches

Run-on time for low-water cut-out:
By potentiometer 2 – 120 s

Motor protection:
By built-in electronic motor protection or tripping unit for external motor protection via WSK (thermal winding contact) or PTC.

Test run:
With pumps at standstill: after 10 h for 10 s

Electronics:
- Emitted interference EN 61000-6-3
- Interference resistance EN 61000-6-1

Signals:
Directly on the switchgear, by means of LED for running/fault, low water

Remote signalling:
Via potential-free contacts for collective run/fault signals

Control circuit voltage: 24 V DC/AC
Voltage feed via line-up terminals:
3~ 400 V ± 10%; 50/60 Hz
3~ 230 V ± 10%; 50/60 Hz
1~ 230 V ± 10%; 50/60 Hz

Options
- Digital pressure display on controller
- Operating hours counter
- Individual running and fault signals
- Protection class: IP 41
- Low-water protection on inlet or pressure side
- Time switch
- with 24 h programme
- With week programme
- External On/Off; via separate input to line-up terminals by GLT/DDC (on request)

Pump cycling
During normal operating cycles of the pressure boosting system, there is a continuous changeover between all the pumps after each ON/OFF switching operation so as to ensure uniform utilisation of all the pumps. The system automatic switches over to the next pump that is ready for operation in the event of a pump malfunction.

Test runs
If no water is drawn off within a period of 10 h, a test run of 10 s is automatically performed.

Low-water cut-out switchgear
The Economy-Controller is designed for connecting all conventional low-water cut-out sensors such as pressure switches, immersion probes or float switches. As well as being combined with the above sensors usually located on the inlet side, it can also be used on the pressure side. The contacts of the required sensors must be wired to line-up terminals in the control device.

Function description
The Wilo Economy pressure boosting system is controlled and monitored by the Economy-Controller ER in conjunction with various pressure and level sensors or switches (see figure 1). The pump in the system is switched on and off according to pressure fluctuations within the selected pressure level in order to meet water requirements. The system's operating range is between the switch-on level p_{ON} applicable to the pump and the switch-off level p_{OFF}

After the switch-off pressure level (p_{OFF}) has been reached and a minimum running time of 1–120 s has elapsed, the system is switched off at virtually Q = 0 m^3/h. As a result, pressure surges and unnecessary switching on and off of the system for minimal extraction amounts are reduced as far as possible. The pump is switched on when the set pressure level p_{ON} is reached.

td= Switch-off time delay

p_{OFF}= Switch-off pressure level

p_{ON}= Switch-on pressure level

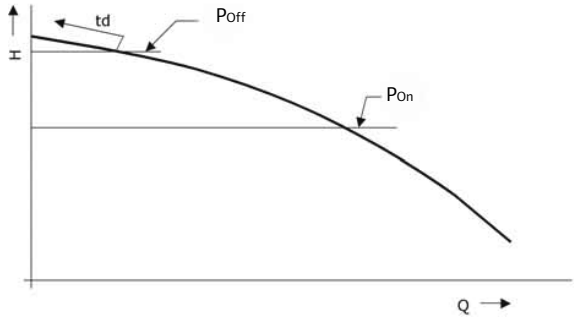

Structure and function description of the Wilo-Smart-Controller SC

Wilo-Smart-Controller SC

Hardware
Fully electronic central control unit, protection class IP 54, with main switch, in modular design.
Version with and without frequency converter.

Set-up of the control device
The construction of the control device depends on the type, number and capacity of the pumps to be connected. Three basic variants are offered:
- **SC**: Control of fixed speed pumps via contactors (cascade activation)
- **SC-FC:** As before, but control of a pump via frequency converter as base-load pump
  Control of the peak-load pump in cascade activation
- **SCe**: Control of electronic pumps or pumps with built-in frequency converter

The device consists of several components:
Main switch: For switching the switchgear On/Off.

Display: Display built into the switch cabinet door for operating and display purposes. Displays the operating data and the receptive current operating statuses of pumps, the controller and the frequency converter (only for SC-FC) by the combination of symbol and number codes. The menu selection as well as the parameter input are done by the "red button".

Microprocessor with "SoftSPS": Microprocessor PLC ("Soft PLC") realised by programming, power supply unit and I/O wiring. The respective programming configuration is dependent on system and application.

Fuse protection of drives and the frequency converter: Series for devices for electric motor powers with P2 4.0 kW via motor protection switches, for drives with P2 5.5 kW via contactor / contactor combinations including thermal actuator and the time relay for star-delta switching.
In the SCe version, the fuse protection of the pumps is done by the pump electronics.

Motor with thermal winding contacts (WSK): Connection possible as per wiring diagram

Motor with PTC: Connection possible via evaluation relay (optionally available)

Frequency converter (only SC-FC version): Frequency converter with PWM technology and mains-side RFI filter for low radiated noise

External On/Off: Line-up terminals for switching the device on/off externally by a higher-level BMS or manual remote control.

Collective run/collective fault signals SBM/SSM: Possible by means of potential-free contacts according to the wiring diagram, maximum contact load of 250 V~ / 2 A

Individual run/fault signal and low water level signal: Potential-free contacts (changeover contacts) are optionally available via the respective terminals.
Max. contact load: 250 V~ / 2 A

Actual pressure display for external measurement / display options: Terminals are available for tapping signals between 0-10 V. 10 V corresponds to the full range final sensor value, i.e. for instance for a 16 bar sensor, 10 V = 16 bar.

Fault display and acknowledgement: Should a fault occur, it is indicated by the error code on the display. The collective fault signal is activated. The "red button" can be used for the acknowledgement.

Standards followed:
- Electronic Equipment for Use in Power Installations (EN 50178)
- Electrical Equipment of Machines (EN 60204-1)
- Household and Similar Electrical Appliances – Safety (EN 60335-1)
- Low-Voltage Switchgear and Controlgear Assemblies (EN 60439-1)
- EMC – Immunity for Industrial Environments (EN 61000-6-2)
- EMC – Emission Standard for Residential, Commercial and Light-Industrial Environments
- EN 61000-6-3

Software
- Fully automatic control of 1 to 4 pumps with or without frequency converter via 4 - 20 mA sensor with open-circuit detection.
- Low-water cut-out via float switch, pressure switch (optionally: electrodes), adjustable follow-up time in event of low water (only in the pressure boosting application).
- Menu navigation with symbol representation.
- Selectable with and without standby pump.
- Test run can be switched on/off, times freely programmable.
- Pump cycling by means of service life optimisation over operating hours.
- alternatively, cyclical pump cycling after a set time period, regardless of the operating hours
- alternately, via impulse – the base-load pump is replaced with each new demand, regardless of operating hours
- Operating hours counter for each pump
- Operating hours counter for each system
- Automatic changeover to the standby pump in the event of a duty pump fault
- Deactivation of base-load pump via pressure and time during operation without frequency converter
- Fault register for the last 9 faults
- Daily clock timer, e.g. for 2nd pressure level.
- Factory-preset parameters for easy commissioning/start-up.
- Deactivation of base-load pump for frequency converter operation by means of zero-flow test (adjustable increasing of the setpoint in adjustable intervals for adjustable duration, pressure and speed checks); if the actual value does not fall, deactivation after the adjustable follow-up time. (only in the pressure boosting application).
  - Pipe filling function
  - for pipe burst monitoring

Structure and function description of the Wilo-Smart-Controller SC

- Overpressure monitoring
- Adjustable logic reversal SSM

Accessories for the SC controller

PTC evaluation relay: Over-temperature monitoring for pumps with PTC resistors.

Individual run and fault signal: Potential-free contacts for remote signalling of the pump status.

Electrical connection

See the “Electrical connection” chapter of the respective device.

Function description

With the Wilo-Control SC control devices, both electronically controlled pumps (SCe version) and pumps without speed control (SC and SC-FC versions) or the Helix and Helix VE product families, can be controlled. The SC, which is controlled by means of a microprocessor with "Soft-SPS", is used to control and regulate centrifugal pumps. For this, various control modes can be selected. The respective control variables of a system are monitored by means of the corresponding signal transmitters and kept within the configured setpoints by the "soft PLC".
In the case of a SC system without a frequency converter, the pumps belonging to the system are switched on and off in load-dependent fashion within the specified control variables according to setpoint. When equipped with a frequency converter, the "soft PLC" influences the frequency converter, which influences in turn the speed of the base-load pump. The frequency converter affects only the base-load pump.
For the control of electronic pumps by the "SCe", the corresponding pump electronics are controlled via 0-10 volt signals.
The control systems are designed differently, depending on the number of pumps and the control requirements. Constant adaptation to the respective consumption/loads within the specified setpoints is ensured by splitting up the total system capacity between a number of small pumps.

Additional information

Significant advantages of the Smart Controller SC are the easier operability using the familiar Wilo "red-button technology", optimal communications with other systems (see section on accessories/optionally available modules) and the low price. All components used with the exception of the print boards meet industrial standards, which means they are available worldwide. The core of the SC is the "Soft SPS" programmable logic controller, which is based exclusively on WILO expertise. All programming is performed internally. This allows the new generation of control devices to be used in a flexible manner and meet customer-specific requirements in all markets.

Structure and function description of Wilo-Comfort-Controller CC

Wilo-Comfort-Controller CC

Hardware
Fully electronic central control unit, protection class IP 54, with main switch, in modular design.
Available with and without frequency converter.

Set-up of the control device
The construction of the control device is dependent on the performance of the pumps that are to be connected (direct starting or star/delta start-up). It is made up of several components:

Main switch: For switching the switchgear On/Off.

Touchscreen: Completely graphics-ready touchscreen built into the switch cabinet door for operating and display purposes. Displays the operating data and the current operating status of each pump, the controller and the frequency converter by means of the combination of symbols, diagrams and a multi-language plain text display. Up to 15 different languages are stored and/or programmable. Operating statuses are also displayed by means of alternating backlighting colours on the touchscreen. The touch-sensitive surface is used to select menus and menu items and to enter parameters.

Programmable logic controller: Modular PLC with 24 V power supply unit. The actual configuration in each case depends on the system. The central unit (CPU), an analogue module and the 24 V power supply unit are always present. A variety of digital modules and a COM interface are also used when the CC Controller is equipped with a frequency converter.

Fuse protection of drives and the frequency converter: Series for devices for electric motor powers with P2 4.0 kW via motor protection switches, for drives with P2 5.5 kW via contactor / contactor combinations including thermal actuator and the time relay for star-delta switching.

Motor with thermal winding contacts (WSK): Connection is possible in accordance with the wiring diagram. Construction and function description of Economy-Controller CC multi-pump systems

Manual-O-Automatic switch: Switch present for every pump for the pump operating modes "Manual" (emergency/test operation on the mains, motor protection available), "O" (pump switched off - no actuation possible via PLC) and "Auto" (pump enabled for automatic operation via PLC).

Frequency converter: PWM frequency converter with mains-side RFI filter for low radiated noise and motor-side sine-wave filter for minimising motor noises and for suppressing voltage peaks in connection with all "COR" systems.

External On/Off: Line-up terminals for switching the device on/off externally by a higher-level BMS or manual remote control.

Collective run/collective fault signals SBM/SSM: Possible by means of potential-free contacts according to the wiring diagram, maximum contact load of 250 V~ / 2 A

Individual run/fault signal and low water level signal: Potential-free contacts (changeover contacts) are optionally available via the respective terminals.
Max. contact load: 250 V~ / 2 A.

Actual pressure display for external measurement / display options: Terminals are available for tapping a signal of 0-10 V. 10 V corresponds to the full range pressure sensor value, i.e. for instance for a 16 bar sensor, 10 V = 16 bar.

Actual frequency display: With control devices with frequency converters, the frequency signal can be tapped via corresponding terminals in the form of a 0 - 10 V signal for external measurement /display options. In this case, 0 -10 V corresponds to a measurement range of 0 - 50 Hz.

Fault display and acknowledgement: In the event of a fault, the colour of the backlighting will switch from its normal GREEN to RED. The collective fault signal is activated and displayed on the screen with fault code number and alarm text. A signal is sent to the defined recipient(s) in the event of systems equipped with remote diagnostics. An acknowledgement can be issued using the RESET switch on the screen or by a remote signal. The backlighting of the display then switches from RED to ORANGE. The backlighting of the display does not switch back to GREEN until the fault has been remedied.

Time display: All of the displayed/recorded times are recorded on the display in real time. This applies as well with power failure, for example, because the real time clock continues to be operated with a backup battery. The charge status of the real time clock - backup battery - is monitored by the system and displayed on the screen as needed.

Electronics
- Emitted interference EN 61000-6-3
- Interference resistance EN 61000-6-1

Software
- Fully automatic control of 1 to 6 pumps with or without frequency controller via 4 - 20 mA sensor with open-circuit detection.
- Low-water cut-out via float switch, pressure switch (optionally: immersion probes), adjustable run-on time in event of low water.
- Menu navigation with plain text in up to 15 languages and/or additional symbol display.
- Selectable with and without standby pump.
- Test run can be switched on/off, times freely programmable.
- Pump cycling by means of service life optimisation via operating hours.
- Alternately: cyclical pump cycling after an adjustable time period regardless of operating hours
- Alternately: via impulse - the base-load pump is replaced with each new demand, regardless of operating hours

Structure and function description of Wilo-Comfort-Controller CC

- Alternately: with pump preselection: one pump can be permanently defined as the base-load pump. All peak-load pumps are replaced on a service life optimisation basis
- Operating hours counter for each pump.
- Operating hours counter for each system.
- Automatic changeover in the event of a fault from duty pump to standby pump.
- Deactivation of base-load pump via pressure and time during operation without frequency converter.
- Low-water cut-out via signals from a suction-side pressure switch or float switch after an adjustable run-on time. Also possible by means of immersion probes and level relays (optionally available).
- Monitoring of maximum and minimum system pressure with adjustable prominent time display
- Safety system for different user groups. Password entry protection in 3 stages.
- Fault register for the most recent faults.
- Weekly clock timer, e.g. for 2nd pressure level.
- Two parameter sets can be selected.
- Factory-preset parameters for easy commissioning/start-up.
- Deactivation of the base-load pump in frequency converter operation by means of zero-flow test (adjustable increasing of the setpoint every 60 s for 5 s.monitoring of pressure and speed), if the actual value does not fall, then deactivation after adjustable run-on time.

Accessories for the CC controller

Optionally available modules
Battery-backed power supply unit: The power supply of the PLC remains in effect, even in the event of mains voltage failure

PTC evaluation relay: Over-temperature monitoring for pumps with PTC resistors.

Remote setpoint adjustment or manual control mode: The setpoint can be modified by means of an external analogue signal (0-10 V, 4-20 mA) or the control device runs in manual control mode by means of external an analogue signal.

Individual run and fault signal: Potential-free contacts for remote signalling of the pump status.

Low-water signal: Potential-free contact for remote signalling of low water level.

Setpoint changeover: Switchover between setpoint 1 and setpoint 2 via external signal

Bus modules: Modules for linkage to different bus systems, e.g. LON, CAN-Bus, Profibus, Modbus RTU, Ethernet.

Communication modules: Modules for remote diagnostics / maintenance, analogue modem, ISDN terminal, GSM modem, web server.

Electrical connection
See chapter "Electrical connection" for the respective system.

Functional description
The Wilo Comfort-N and Wilo Comfort pressure boosting systems are controlled and monitored by means of the CC Comfort-Controller in conjunction with various pressure and level sensors. The Comfort control system, controlled by a programmable logic controller (PLC), is used to control and regulate pressure boosting systems with up to 6 individual pumps, with the system pressure being monitored through corresponding signal transmitters and kept within the parameterised pressure values by the PLC. In the case of a CC system without a frequency converter, the pumps belonging to the system are switched on and off in cascading fashion in load-dependent fashion within the specified level(s), according to water demand. The CC controller is capable of operating with or without frequency converter. When equipped with a frequency converter, the PLC influences the frequency converter, which influences in turn the speed of the base-load pump. The frequency converter affects only the base-load pump. A modification of the speed changes the volume flow and thus the power output of the pressure boosting system. Non-regulated peak-load pumps are switched on and off automatically according to changes in the load, while the base-load pump handles fine-tuning to the preset setpoint. The control systems are designed differently depending on the number of pumps and the control requirements. Splitting the total system capacity between a number of small pumps ensures constant adaptation to the current consumption/load within the specified pressure limits.

System functions without frequency converter
During operation without frequency converter, the system's operating range is between the switch-on level p_{On} applicable to all the pumps and the switch-off pressure level p_{Off2} for
a) the base-load pump and
b) the switch-off level p_{Off1} for the peak-load pumps.

After the 2nd switch-off pressure level (p_{Off2}) has been reached and a minimum running time of 0–180 s has elapsed, the system is switched off at virtually Q = 0 m^3/h. As a result, pressure surges and unnecessary switching on and off of the system for minimal extraction amounts are reduced as far as possible.

The switching on of the base-load and peak-load pumps occurs when the pressure level falls below the specified setpoint p_{On} (see also Figure 1 below) .

Structure and function description of Wilo-Comfort-Controller CC

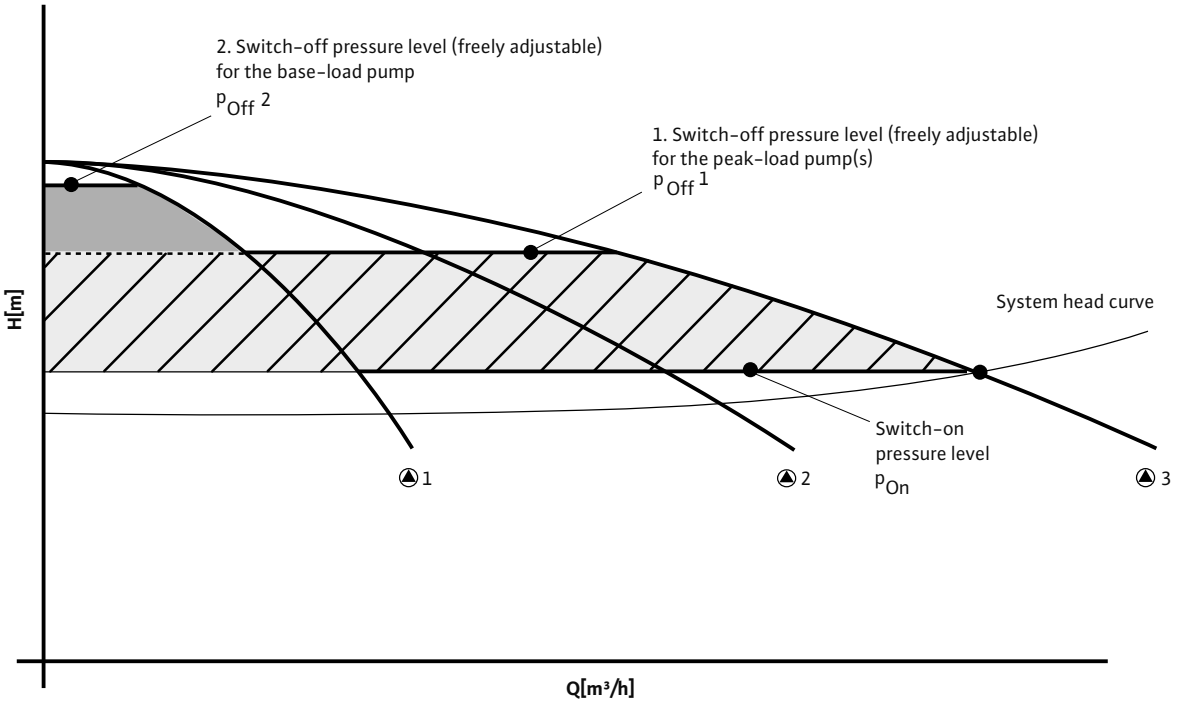

System functions with frequency converter

When used with the frequency converter, the operating range will remain at setpoint value. Only in the region of the 100% speed limit for each duty pump, before the respective peak-load pump is switched on, does the pressure fall to the switch-on pressure level p_{On} or before the respective peak-load pump is switched off does the pressure rise to the switch-on pressure level p_{Off}. Any excessive pressure surges due to switching the peak-load pumps on or off will be mainly compensated for by the frequency converter lowering or raising the speed of the base-load pump, thus ensuring a soft transition in line with load variations commonly encountered in building services.
The pressure boosting system switches on without delay when the system pressure drops to the switch-on pressure level p_{On}, with the base-load pump starting softly under control of the frequency converter.
The pressure boosting system is switched off by means of the processor at Q = 0. Fluid hammer caused by immediate switch-on following premature switch-off is thereby fully eliminated.

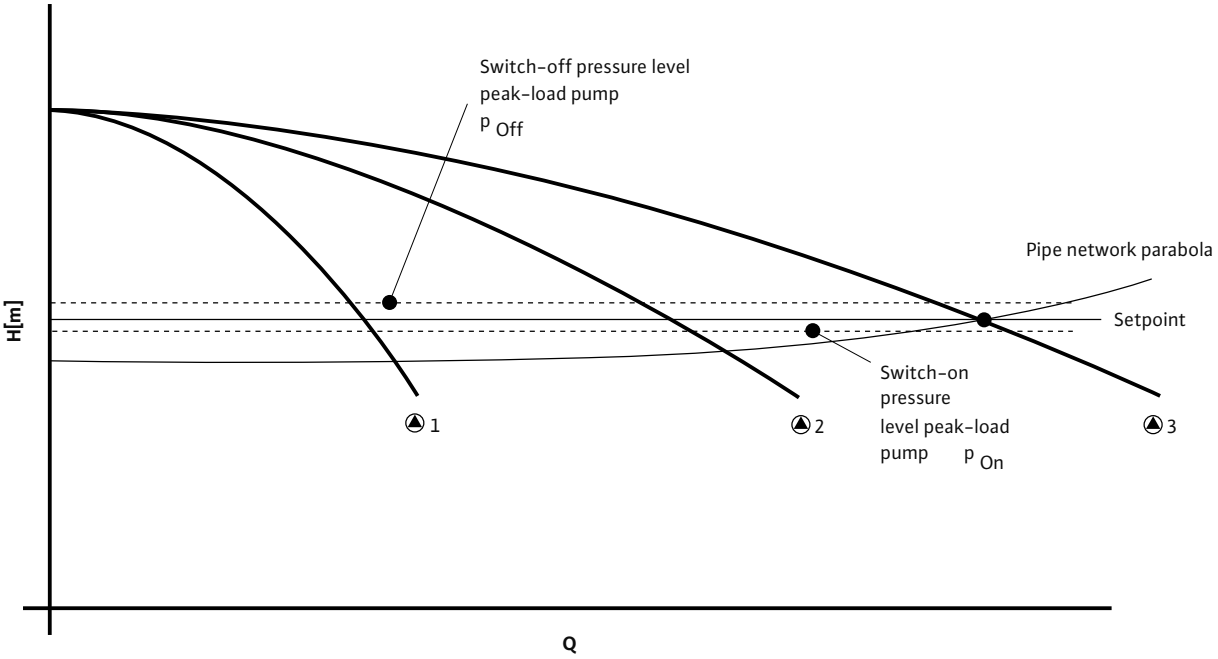

Structure and function description of Wilo-Comfort-Vario-Controller

Wilo-Comfort-Vario-Controller

Hardware
Central control unit of fully electronic modular design for automatic control of a maximum of 4 pumps in parallel containing an integrated/adapted frequency converter for variable speed control. Sheet steel casing of protection class IP 54 with main switch, LC display screen and dial pushbutton.

Modules
Operating and display module: for the communication between system and operator, built into the switchgear door, comprising:

LCD display screen (alphanumeric, backlit) for the display of setpoint and actual pressure levels and all control parameters including all adjustable time settings as well as operating statuses of the pumps (Manual/Zero/Automatic), display of fault signals and history log.

Dial pushbutton (single-button operation) for retrieval, modification and acknowledgement of setpoints, control parameters and **LEDs** to indicate system statuses such as:
Power on – System running – Pump fault – Low water – Overpressure.

Base board module with power supply unit, for supply of all required voltages, signal adaptation and filtration, connection to the controller board and to the operating and display module, connection to the optionally available individual run and fault signal boards. Terminals for wiring to the actual value sensor, low-water signal contacts, control terminals. Internal interfaces RS 232/RS 485. GLT connections for collective run signals, collective fault signals (potential-free contacts), external ON/OFF.

4 change-over switches for selecting an adjustable DC voltage for all pumps. (Emergency function in the event of controller board failure)

Controller board module for execution of all control features.

Software/automatic control
Fully automatic, infinitely variable control of 1 to 4 pumps in parallel with integrated/adapted frequency converter in function p = constant via 4 – 20 mA sensor with wire break/sensor-fault detection.
- Low-water detection via float switch or pressure switch (optionally via immersion probes). Adjustable run-on time in event of low water.
- Menu navigation via symbols and numerical values
- Manual-0-Automatic operation
- Optionally with or without standby pump.
- Test run can be switched On/Off
- Service life optimisation by means of operating hours
- Operating-hours counter, system/pumps
- Automatic changeover in the event of a fault from duty pump to standby pump.
- Time-sensitive changeover/rotation of all pumps.
- Fault event memory for most recently occurring faults.
- Overpressure cut-out via pressure sensor signal 3 seconds after exceeding the freely adjustable overpressure level.
- Consumption-dependent activation/cut-in of the base-load/peak-load pumps.
- Deactivation of peak-load pumps as a function of load demand. For base-load pump via 0-quantity flow test.

Standards/guidelines:
The overall system conforms with the requirements of DIN 1988 parts 5/6.
Regarding the electrical components, the system conforms with the requirements of
VDE 0100 Part 430/Part 540
VDE 0110 Part 1/Part 2
VDE 0660 part 101/part 107 and also
DIN 40719/IEC 754

Electronics/EMC details
Multi-pump systems up to and including 7.5 kW motor power:
- Emitted interference in compliance with EN 61000-6-3
- Interference resistance in compliance with EN 6100-6-1

Multipump systems with 11-22 kW motor power:
The product meets the specifications of EN 61800-3 and fulfils the requirements of residential areas in terms of emitted interference and the requirements of industrial areas in terms of interference resistance. For applications in residential areas, an EMC radio interference filter is also to be provided for interference suppression on the mains side in accordance with EN 61800-3, class B1.
Note: Systems to be used in residential buildings must be installed by personnel who have completed EMC training.

Electrical connection
See chapter "Electrical connection" for the respective system.

Attention!
When installing residual-current-operated protection switches in conjunction with frequency converters, bear in mind that only universal-current-sensitive residual-current-operated protection switches as per DIN/VDE 0664 are to be provided.

Structure and function description of Wilo-Comfort-Vario-Controller

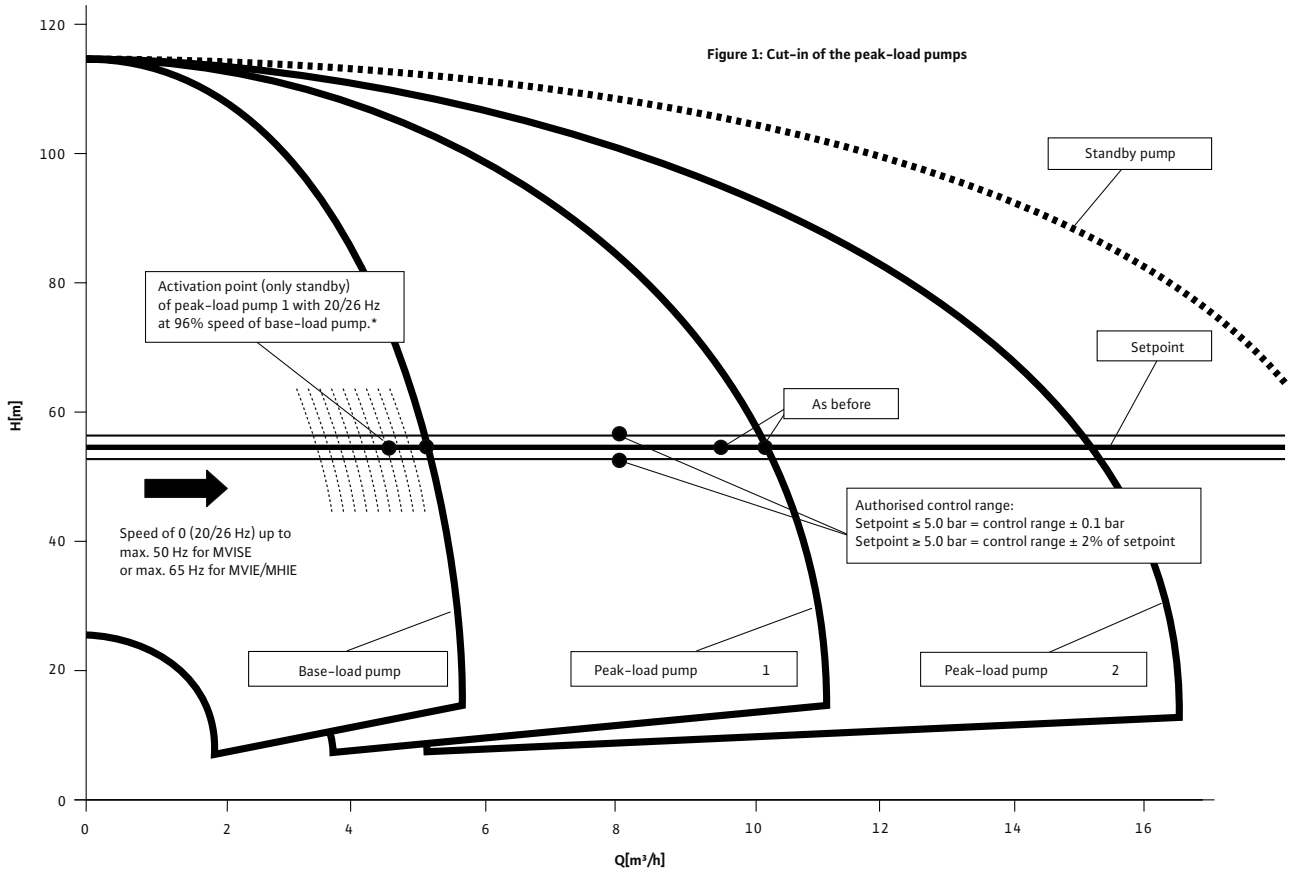

* if the base-load pump remains at its present speed = the peak-load pump switches off after 15 seconds

Function description

The Wilo Comfort Vario pressure boosting system is controlled and monitored by the Comfort Vario controller in conjunction with various pressure and level sensors. The system's pumps start and stop in a cascade, pressure-sensitive within the limits of the control range, in response to water demand. Splitting the total duty over a number of pumps, each of which featuring variable speed control by integrated/adapted frequency converters, will ensure a continual duty adaptation to the ever-changing consumption/load statuses within the specified pressure control range.
The authorised control range is up to a setpoint of 5.0 bar ±0.1 bar. For setpoints greater than 5.0 bar, the authorised control range amounts to ±2% of the preset setpoint value. A precondition for this is that the rate of change of volume flow on water extraction is not greater than the control reaction speed of a pump, (ramp run-up time of the frequency converter 1 sec), or on overload on a pump = ramp time + time delay on starting the peak-load pump(s).

Activation of the base-load pump

The base-load pump starts without delay under automatic control if the setpoint pressure drops below the programmed setpoint value. The pump is infinitely variable adjusted within its output range (between 0 and maximum volume flow) to the load status of the system by the integrated frequency converter within the control range. Series MVISE pumps allow a speed range in the frequency range from 20 Hz to 50 Hz.

Cut-in of the peak-load pumps (see Figure 1)

In the presence of rising water requirements, the base-load pump will first run up to its maximum speed. Speed control is blocked at this point to allow this pump to operate at optimum efficiency. Peak-load pump 1 now assumes the control function. It had already been started by the Comfort Vario controller at 96% speed of the base-load pump. But this only takes the form of a standby function (20/26 Hz operation) so that the control function can be assumed without delay in the event that the power of the base-load pump is exceeded. This reliably prevents the pressure surge which normally occurs when the peak-load pump cuts in. Should a persistent state occur after the 1st peak-load pump is switched on, e.g. no continuously increasing water requirement can be registered for the system, then the peak-load pump will be taken out of operation again after 15 seconds, thus avoiding unnecessary waste of electric power.
During the period that peak-load pump 1 is on standby it has no influence whatsoever on the hydraulic output of the overall pressure boosting system due to its low speed in 20 Hz operation.
Additional peak-load pumps cut in the same way as in the above description. Previously operating pumps will be locked at maximum speed and the control function is assumed by the newly started pump. Economical operation at nominal speed and therefore optimum efficiency is achieved on the already fully loaded pumps.

Structure and function description of Wilo-Comfort-Vario-Controller

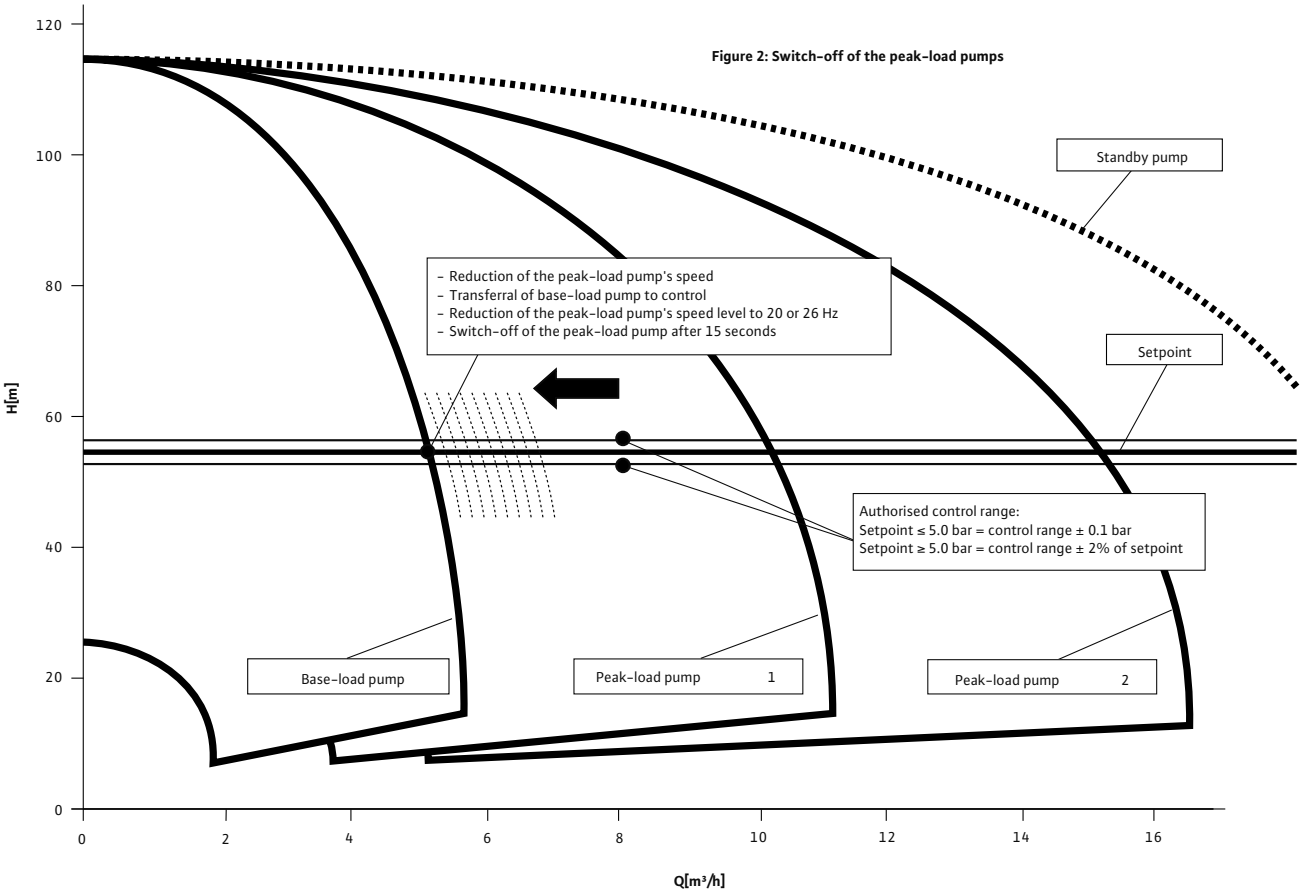

Switch-off of the peak-load pumps (see Figure 2:)

When water requirements drop, the peak-load pump in operation is first run down until it no longer has any influence on the hydraulic performance of the pressure boosting system.

This is the case when, because of the change in speed, its delivery head falls below the setpoint delivery head in the duty point and thus under the power range of the base load or peak-load pump that up to that point was still running with blocked maximum speed.

The Comfort Vario controller will then actuate the transfer of the next peak-load pump or the base-load pump (as applicable) to automatically controlled variable speed operation.
The speed of the already run-down peak-load pump will be reduced to the minimum (20 Hz).

The peak-load pump will be switched off completely after a time delay of 15 seconds.
If water requirements continue to drop, other still running peak-load pumps will be successively switched off in the same way as described above.

Structure and function description of Wilo-Comfort-Vario-Controller

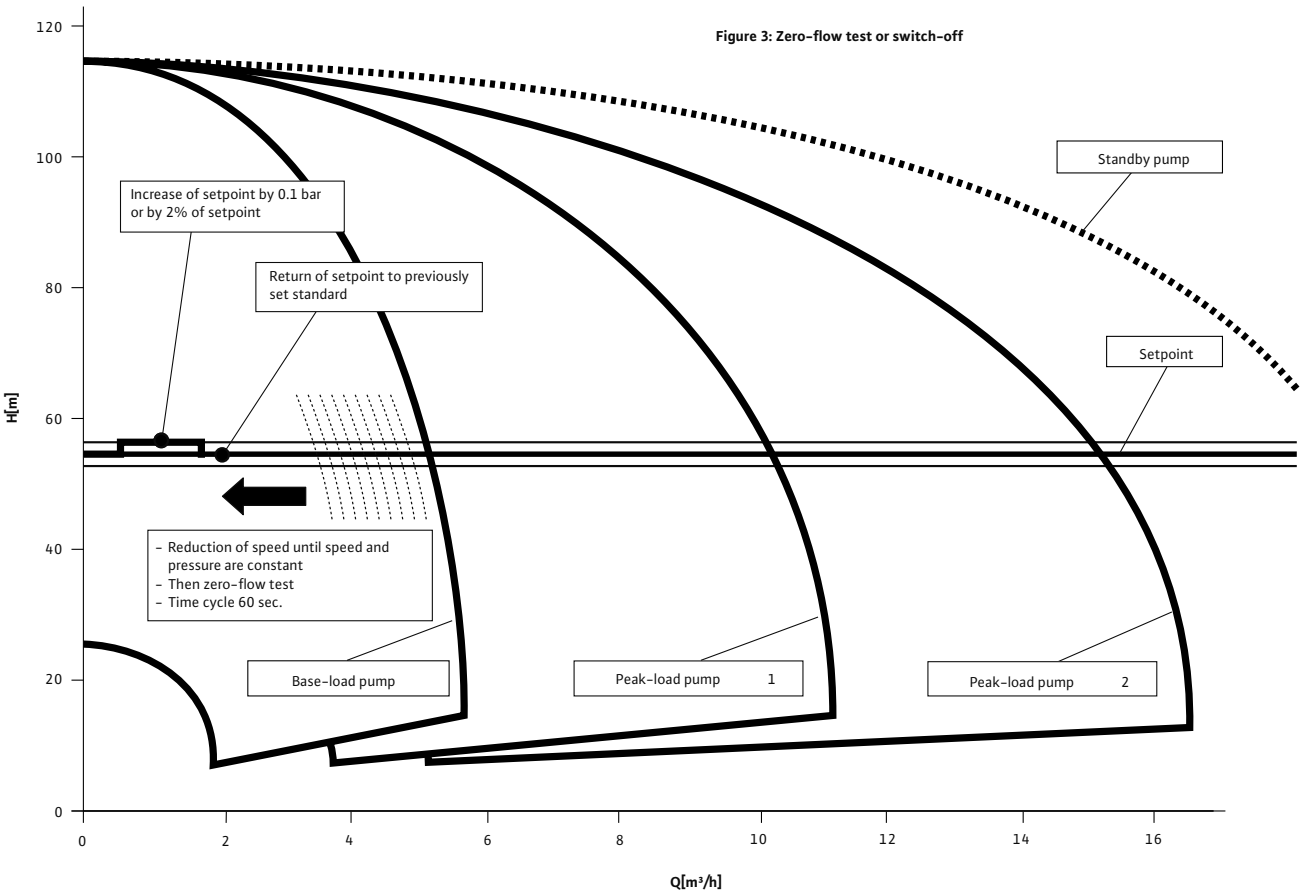

Zero-flow test and deactivation of base-load pump (see Figure 3)

In order to prevent the system from hunting and the pressure fluctuations associated with that, the Comfort-Vario-Controller deactivates the entire pressure boosting system only when there really is no more water being extracted.

The preconditions for this state are established by the zero-flow test as carried out by the Comfort-Vario-Controller.

The minimum requirements are that only the base-load pump is still running and the system pressure and the speed of the base-load pump have remained constant for a specific, parameterisable timeframe.

The zero-flow test is initiated and performed by the Comfort Vario controller if these requirements are satisfied. The test involves increasing the setpoint pressure value by 0.1 bar (with setpoint pressure values ≤ 5.0 bar) for 60 seconds. With setpoint pressure values > 5.0 bar, the increase is 2% of the nominal value. After that the setpoint is set back to its original level.
If, during that time, the actual system pressure remains at the raised setpoint level, the pressure boosting system is deactivated as water is no longer being drawn off. However, if the actual pressure drops by a minimum of 0.1 bar in relation to the raised setpoint level, the base-load pump continues to operate as water is still being drawn off.

Structure and function description Wilo-Economy-Controller ER2 - ER4

Wilo-Economy-Controller ER2 - ER4

Fully electronic central control unit, protection class IP41, fitted with main switch and pump control switch for each pump with the functions [Manual (time-sensitive resetting)] – [0] – [Automatic] and display/monitoring LEDs for the low-water function and running/fault for each pump, direct-on-line starting up to and including 4 kW motor power (at 400 V/50 Hz).

Equipment/function

Fully electronic control, main switch, selection switch for each pump with [Manual (time-sensitive resetting)] – [0] – [Automatic] function. Control via electronic pressure sensor 4 - 20 mA. Setpoint adjustment by means of 3 potentiometers:

a) Setpoint = switch-on level p_{On}
b) 1. Switch-off pressure level peak-load pump p_{Off1}
c) 2. Switch-off pressure level base-load pump p_{Off2}

Run-on time, peak-load pumps: Approx. 8 s

Run-on time, base-load pump:
Overriding via potentiometer for 2nd switch-off pressure level and potentiometer for time 8 – 120 s.

Low-water cut-out:
Activation by means of suction-side pressure switch, immersion probes or float switch

Run-on time for low-water cut-out:
By potentiometer 8 – 120 s

Motor protection:
By integrated electronic motor protection switch for series MHI pumps, trip function for thermal winding contacts and PTC sensor.

Pump cycling:
Rotating base/peak-load changeover at each new start.

Test run:
With pumps at standstill: after 6 h for 15 s

Fault-actuated switchover:
Automatic, in event of malfunction of a duty pump, plus optical "Fault" indication

External On/Off:
Via separate input at the line-up terminals by building management system/DDC
Electronics:
- Emitted interference EN 61000-6-3
- Interference resistance EN 6100-6-1

Signals:
Directly at the control panel, by means of Run/Fault LEDs for each pump, low water

Remote signalling:
Via potential-free contacts for collective run/fault signals

Control circuit voltage: 24 V DC/AC
Voltage feed via line-up terminals:
3~ 400 V ± 10%; 50/60 Hz
3~ 230 V ± 10%; 50/60 Hz
1~ 230 V ± 10%; 50/60 Hz

Options

- Digital pressure display on controller
- Operating hours meter individual operating and fault signals
- Protection class IP 54
- Low-water protection on inlet or pressure side
- Clock timer
- with 24 h programme
- With week programme

Pump cycling

During normal operating cycles of the pressure boosting system, there is a continuous changeover between all the pumps after each ON/OFF switching operation so as to ensure uniform utilisation of all the pumps. The system automatic switches over to the next pump that is ready for operation in the event of a pump malfunction.

Test runs

If no water is drawn off within a period of 6 hrs, a test run is of 15 s is automatically performed at the first pump, and then at the second pump after a further 6 hrs. This ensures that all pumps undergo a test run within a period of 24 hrs.

Low-water cut-out switchgear

The Economy-Controller is designed for connecting all conventional low-water cut-out sensors such as pressure switches, immersion probes or float switches. As well as being combined with the above sensors usually located on the inlet side, it can also be used on the pressure side. The contacts of the required sensors must be wired to line-up terminals in the controller.

Functional description

The Wilo Economy pressure boosting system is controlled and monitored by means of the Economy-Controller ER in conjunction with various pressure and level sensors (see Fig. 1). The system's pumps start and stop in a cascade, pressure-sensitive within the limits of the set pressure level(s), in response to water demand. Splitting the total system capacity between a number of small pumps ensures constant adaptation to the current consumption/load within the specified pressure limits. The system's operating range lies between the switch-on level pOn applicable to all the pumps and the switch-off level p_{Off2} for
a) the base-load pump and b) the switch-off level p_{Off1} for the peak-load pump.

Structure and function description Wilo-Economy-Controller ER2 – ER4

After the 2nd switch-off pressure level (p_{Off2}) has been reached and a minimum running time of 1–120 s has elapsed, the system is switched off at virtually Q = 0 m^3/h. As a result, pressure surges and unnecessary switching on and off of the system for minimal extraction amounts are reduced as far as possible.

The base- and peak-load pumps are activated when the pre-set pressure level p_{On} is reached.

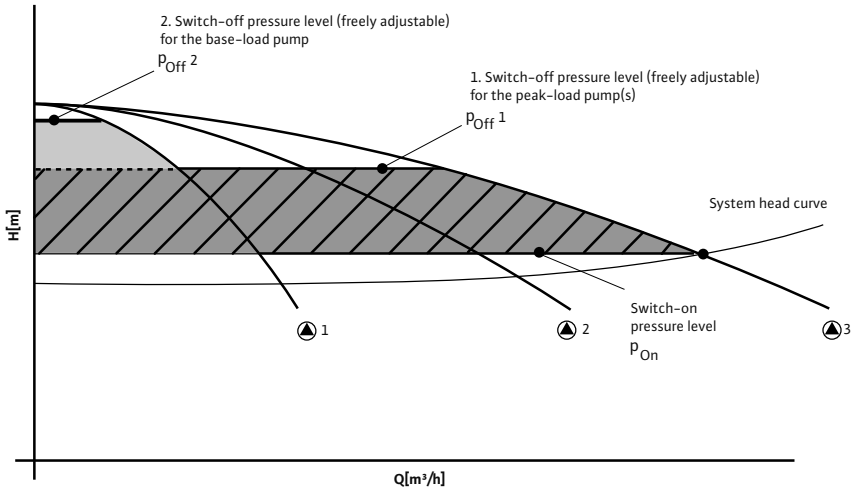

Mechanical accessories: Wilo diaphragm pressure vessel DT5 junior, DT5 Duo

Diaphragm pressure vessel, DT5 Junior type

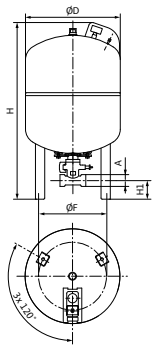

Application:
Type-tested diaphragm pressure vessels for use in conjunction with potable water, water-supply or pressure boosting systems. The vessels are for the purpose of avoiding pressure surges in the system and reduce the switching frequency of the pumps/system.

Important:
Use of the diaphragm pressure vessels on the suction side must comply with the provisions and requirements of the local water-supply companies.

Type key

Example:	**Wilo DT5 junior 500**
DT5	Diaphragm pressure vessel
500	Nominal content in l

Description of DT5 junior
- Diaphragm pressure vessels for potable water, pressure boosting and water-heating systems.
- Throughflow, complete with throughflow fitting including shut-off and drain
- Diaphragm exchangeable in accordance with KTW C and W 270 starting from 60 l
- Built and tested to DIN 4807 T5, DIN DVGW Reg. No.
- NW-9481AU2123 and NW 9481AT2535
- Approved in accordance with Pressure Appliances Directive 97/23/EG
- Green or white, plastic-coated according to KTW A
- Supply pressure 4.0 bar

Diaphragm pressure vessel, DT5 Duo type

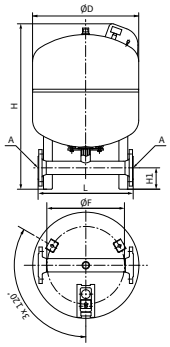

Description of DT5 with Duo connection
Same as DT5 junior, plus:
- Piping with flange DN 50/PN 16
- For particularly high volume flow rates
- Shutoff provided by customer

Permitted fluid: water without abrasive materials
Fluid temperature: max. 70 °C
Tank material: steel
Diaphragm material: elastomer in accordance with DIN 4807 T5/prEN 13831, approved for use with foods

Available versions (other versions on request):
DI/DUO: Diaphragm in conformity with food safety laws, version with internal tank coating
PN 10: Max. operating pressure 10 bar
PN 16: Max. operating pressure 16 bar

Mechanical accessories: Wilo diaphragm pressure vessel DT5 junior, DT5 Duo

Nominal capacity, dimensions, weights (PN10)

Type	Tank volume	Tank connection	Pitch circle of foot	Dimensions				Tilt dimension	Weight approx.
	V	*A*	*F*	*D*	*L*	*H*	*H1*		*m*
	l		mm						kg
DT5 junior 60	60	Rp $1^1/_4$	293	409	112	766	80	868	15
DT5 junior 80	80	Rp $1^1/_4$	351	480	112	750	72	890	17
DT5 junior 100	100	Rp $1^1/_4$	351	480	112	834	72	962	20
DT5 junior 200	200	Rp $1^1/_4$	485	634	112	973	80	1161	47
DT5 junior 300	300	Rp $1^1/_4$	485	634	112	1273	80	1422	53
DT5 junior 400	400	Rp $1^1/_4$	570	740	112	1245	69	1448	70
DT5 junior 500	500	Rp $1^1/_4$	570	740	112	1475	69	1650	79
DT5 Duo 80	80	DN 50/PN 10	351	480	430	750	97	890	22
DT5 Duo 100	100	DN 50/PN 10	351	480	430	834	97	962	27
DT5 Duo 200	200	DN 50/PN 10	485	634	600	980	104	1161	50
DT5 Duo 300	300	DN 50/PN 10	485	634	600	1273	104	1422	52
DT5 Duo 400	400	DN 80/PN 10	570	740	600	1245	110	1448	74
DT5 Duo 500	500	DN 80/PN 10	570	740	600	1475	110	1650	80
DT5 Duo 600	600	DN 80/PN 10	640	740	630	1859	233	2001	159
DT5 Duo 800	800	DN 80/PN 10	640	740	630	2314	233	2439	199
DT5 Duo 1000	1000	DN 80/PN 10	640	740	630	2734	233	2832	232
DT5 Duo 1500	1500	DN 100/PN 10	–	1200	314	2000	141	2325	539
DT5 Duo 2000	2000	DN 100/PN 10	–	1200	314	2450	141	2729	714
DT5 Duo 3000	3000	DN 100/PN 10	–	1500	314	2520	168	2933	1054

Mechanical accessories: Wilo diaphragm pressure vessel DT5 junior, DT5 Duo

Nominal capacity, dimensions, weights (PN16)

Type	Tank volume	Tank connection	Pitch circle of foot	Dimensions				Tilt dimension	Weight approx.
	V	*A*	*F*	*D*	*L*	*H*	*H1*		*m*
	l		mm						kg
DT5 Duo 80	80	DN 50/PN 16	351	480	430	750	97	890	30
DT5 Duo 100	100	DN 50/PN 16	351	480	430	834	97	962	35
DT5 Duo 200	200	DN 50/PN 16	485	634	600	980	104	1161	58
DT5 Duo 300	300	DN 50/PN 16	485	634	600	1273	104	1422	63
DT5 Duo 400	400	DN 80/PN 16	570	740	600	11245	110	1578	113
DT5 Duo 500	500	DN 80/PN 16	570	740	600	1475	110	1776	125
DT5 Duo 600	600	DN 80/PN 16	640	740	630	1859	233	2001	169
DT5 Duo 800	800	DN 80/PN 16	640	740	630	2314	233	2439	219
DT5 Duo 1000	1000	DN 80/PN 16	640	740	630	2734	233	2832	245

The **maintenance** of diaphragm pressurised expansion tanks is governed by DIN 4807 T2. Maintenance must be performed once per year. For the most part, it involves inspecting and adjusting the supply pressure to the tank and the system filling pressure/initial pressure.**Inspection of pressurised tanks according to German Industrial Health and Safety Regulations (BetrSichV), Edition 27/09/2002. when operating them according to the supplied Installation, Operating and maintenance instructions**. Classification in Fluid Group 2 according to DGRL – e.g. water, air, nitrogen = not at risk of explosion, non-poisonous, not easy to ignite.

Assessment/Category as per diagram 2 Appendix II DGRL	**before Commissioning §14**	**recurring inspections, §15**			
			Maximum interval in years		
	Tested by	**Tested by**	**outside 1)**	**inside 2)**	**Strength 2)**
V ≤ 1 litres and PS≤ 1000 bar	no special requirements, regulation under the responsibility of the operator based on the current state of the art and the requirements in the installation and operating instructions				
PSxV≤ 50 bar x litre					
PSxV>50 bar ≤ 200 bar x litre	bP	bP	no maximum intervals specified 3)		
PSxV> 200 bar ≤ 1000 bar x litres	Monitoring body	bP	no maximum intervals specified 3)		
PSxV> 1000 bar x litre	Monitoring body	Monitoring body	–	5 *	10

Recommendation

*	Recommendation: Diaphragm vessel with bladder diaphragm max. 10 years, however at a minimum when opening to perform repair work (e.g. replacing the diaphragm) in accordance with Appendix 5 Sections 2 and 7 of the German Regulations of Industrial Health and Safety (BetrSichV).
PS	Maximum possible overpressure in bar, which may result of the system properties and operating mode
V	Nominal volume in litres
bP	Authorised person according to § 2 (7) German regulations on industrial health and safety (BetrSichV) who has the necessary specialist expertise for checking the operating equipment (pressure devices) by reason of their vocational training, experience and current occupation.
Monitoring body	Approved monitoring authority.according to § 21 German regulations on industrial health and safety (BetrSichV), TÜV until further notice
1)	External inspections can be omitted every 2 years when used in the normal situations. Only necessary if the pressurized device is fire-heated, exhaust-heated or electrically heated.
2)	Inspections and strength tests can be replaced by other suitable test methods if it is not possible to implement them due to the pressure device version or, where its operating mode makes it not useful (e.g. fixed installed diaphragm). For the diaphragm vessel, the strength test can be emitted if the interior inspection did not identify any damage to the diaphragm and coating (Appendix 5, 7.(1) BetrSichV).
3)	Specification based on the manufacturer's information and experience with the operating mode and supply materials. The inspection can be carried out by an authorised person according to § 2 (7) BetrSichV.

Mechanical accessories: Wilo safety valve

Full-stroke safety valve

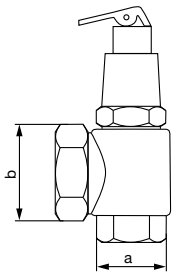

Safety valve for protecting the system against overpressure when water supply and pressure boosting systems are used. Installation according to local building regulations and DIN.

Attention: Safety valves are delivered with factory settings only.
Blow-off pressure 6, 10 or 16 bar. Specify when ordering.

Technical data

Permitted fluids:	water without abrasive materials
Fluid temperature:	Max. 130 °C
Response pressure:	10 % above factory-set pressure
Discharge output:	See table

Materials

Housing:	red brass/brass
Gasket:	Perbunan/EPDM

Overview of sizes

Size (a)	Blow-off connection (b)		Blow-off power at 10 % pressure exceedance		
	6-10 bar	16 bar	6 bar	10 bar	16 bar
	-	-	m^3/h		
Rp ¾	Rp 1¼	Rp 1¼	12.9	16.6	21.0
Rp 1	Rp 1	Rp 1¼	9.0	13.0	37.5
Rp 1¼	Rp 1¼	Rp 2	18.9	24.4	73.5

Mechanical accessories Wilo break tank for potable water applications (VBH)

Wilo break tank for potable water applications (BT), according to DIN 1988 (EN 806)

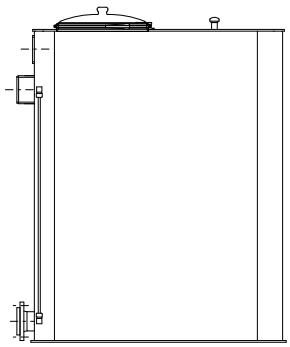

Application:
atmospherically vented break tank in accordance with 1988 (EN 806) for the indirect connection of a pressure boosting system to the public potable water supply

When using, please observe DIN 1988 (EN 806) and the regulations of the local water-supply companies.

Scope of delivery
PE tank, round or rectangular construction, with
- Water level indicator
- Drain
- Float switch as signal transmitter to protect against low water level
- Ventilation and exhaust with strainer insert
- Inspection opening with cover that can be sealed without tools
- Inner wash plates for slowing down the fluid
- Inlet, overflow, draw-off connection

Permitted fluid: pure water
Fluid temperature: max. 40 °C
Tank material: PE, completely safe in compliance with all legislation relating to food safety

Installation location/notes on installation
- Flat, horizontal, frost-resisting
- Provide sufficient space for inspection
- In accordance with DIN 1988 (EN 806)

Important:
Onsite connecting lines must be connected so that they are not weight-loaded and stress-free.

Accessories (to be ordered separately)
Float valve(s) or diaphragm valve (starting with BT 1500l) with pilot valve.

Wilo tank for potable water applications (break tank), rectangular

Dimension drawing

150 to 500 litres, rectangular

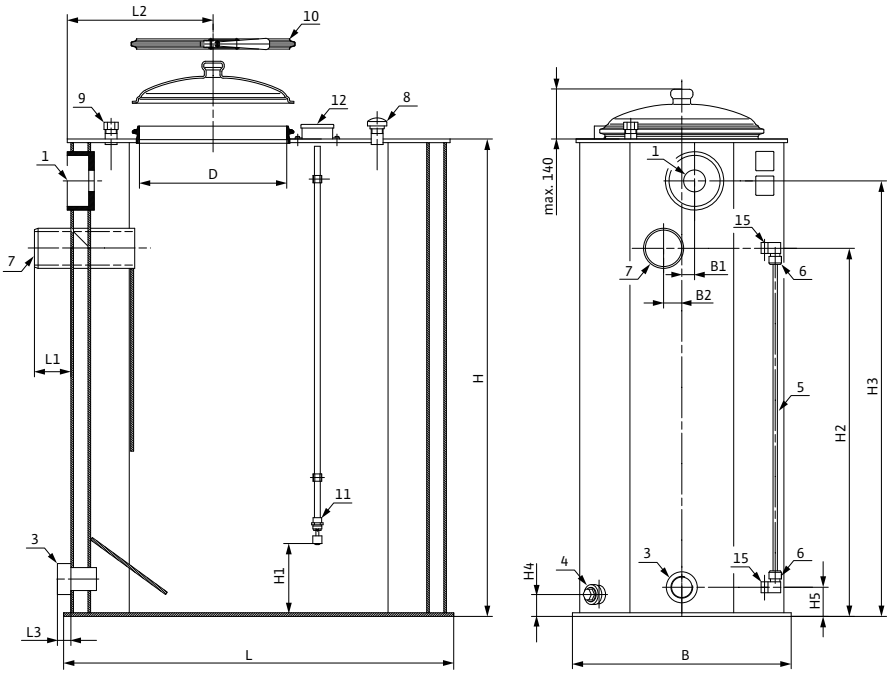

1 Drilled hole for float valve
3 Draw-off connection
4 Evacuation connection
5 Water level indicator clear-view tube
6 Water level indicator screwed connection
7 Overflow
8 Ventilation and exhaust
9 Flush connection
10 Cover with locking ring for inspection opening
11 Low water float switch
12 Connection socket for float switch
15 Moulded part connection water level indicator

Dimension drawing

800 to 1000 litres, rectangular

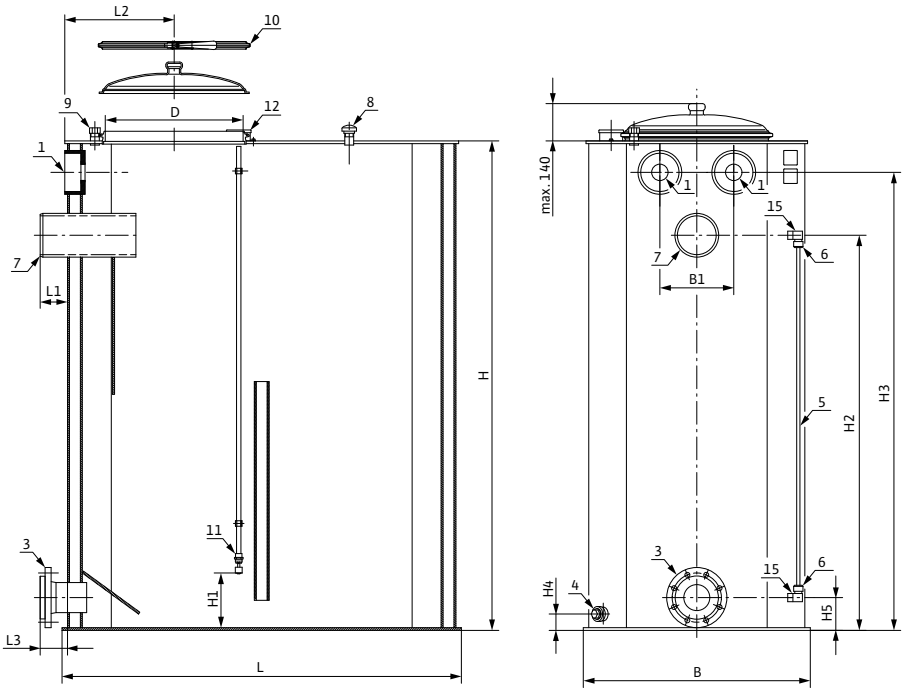

1 Drilled hole for float valve
3 Draw-off connection
4 Evacuation connection
5 Water level indicator clear-view tube
6 Water level indicator screwed connection
7 Overflow
8 Ventilation and exhaust
9 Flush connection
10 Cover with locking ring for inspection opening
11 Low water float switch
12 Connection socket for float switch
15 Moulded part connection water level indicator

Wilo tank for potable water applications (break tank), rectangular

Dimension drawing

1500 to 3000 litres, rectangular

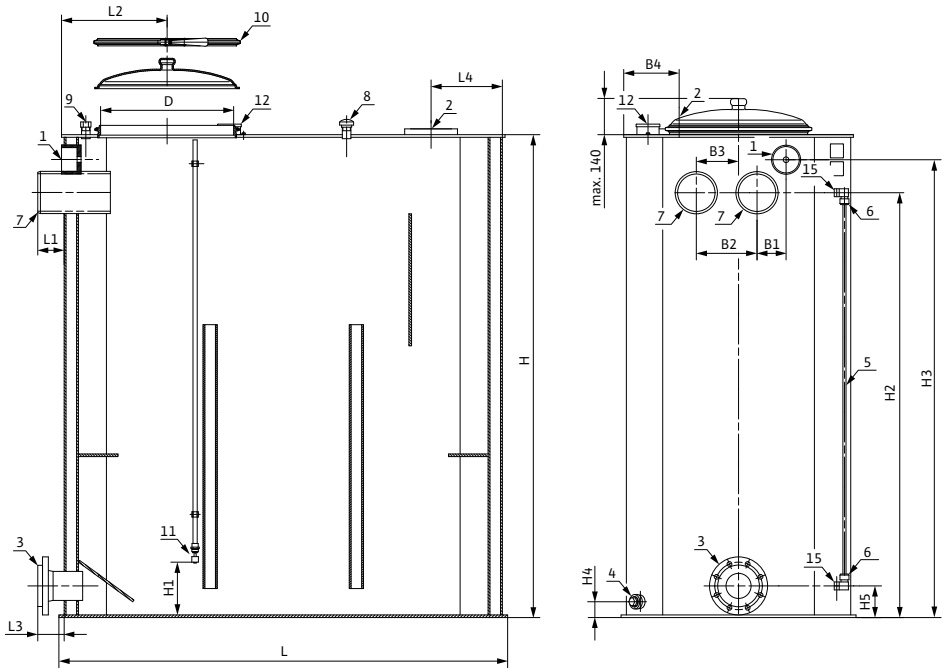

1 Drilled hole for float valve
2 Flange connection for inlet (diaphragm valve)
3 Draw-off connection
4 Evacuation connection
5 Water level indicator clear-view tube
6 Water level indicator screwed connection
7 Overflow
8 Ventilation and exhaust
9 Flush connection
10 Cover with locking ring for inspection opening
11 Low water float switch
12 Connection socket for float switch
15 Moulded part connection water level indicator

Dimensions, weights

Tank contents	Dimensions													
	B	*B1*	*B2*	*D*	*H*	*H1*	*H2*	*H3*	*H4*	*H5*	*L*	*L1*	*L2*	*L3*
	mm													
150	520	10	40	304	1005	190	762	890	60	80	1070	100	300	32
300	600	35	50	404	1310	190	1010	1195	60	80	1070	100	400	37
500	670	50	70	404	1425	190	1125	1310	60	102	1270	100	400	100
800	830	310	–	504	1565	190	1220	1450	60	115	1460	100	400	100
1000	830	310	–	504	1790	200	1445	1675	60	120	1460	100	400	100
1500	890	110	230	504	1830	200	1610	1735	60	120	1700	100	400	100
2000	890	110	230	504	1830	200	1610	1735	60	120	2215	100	400	100
3000	1030	110	230	504	1830	200	1610	1735	60	120	2740	100	400	100

Dimensions, weights

Tank contents	Inlet	Extraction	Flush connection	Overflow	Evacuation connection	Weight approx.
						m
						kg
150	33	Rp 1½	G 1	1 x HT 70	G 1	76
300	60	Rp 2	G 1	1 x HT 100	G 1	92
500	60	DN 65	G 1	1 x HT 100	G 1	112
800	2 x 60	DN 80	G 1	1 X HT 150	G 1	141
1000	2 x 60	DN 100	G $1^1/_4$	1 X HT 150	G 1	156
1500	DN 80	DN 100	G $1^1/_4$	2 x HT 150	G 1	180
2000	DN 80	DN 100	G $1^1/_4$	2 x HT 150	G 1	216
3000	DN 100	DN 100	G $1^1/_4$	2 x HT 150	G 1	267

Wilo break tank for potable water applications, round

Dimension drawing

150 to 600 litres, round

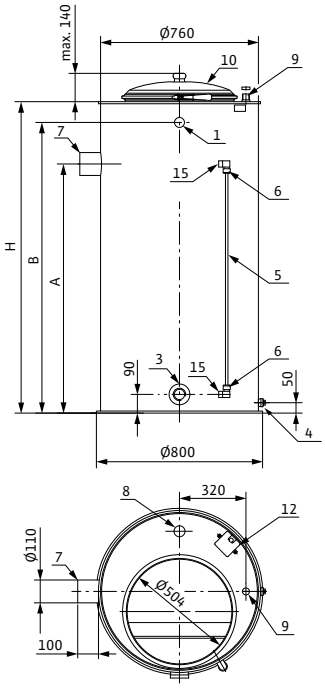

1 Drilled hole for float valve
3 Draw-off connection
4 Evacuation connection
5 Water level indicator clear-view tube
6 Water level indicator screwed connection
7 Overflow
8 Ventilation and exhaust
9 Flush connection
10 Cover with locking ring for inspection opening
12 Connection socket for float switch
15 Moulded part connection water level indicator

Dimension drawing

800 to 1000 litres, round

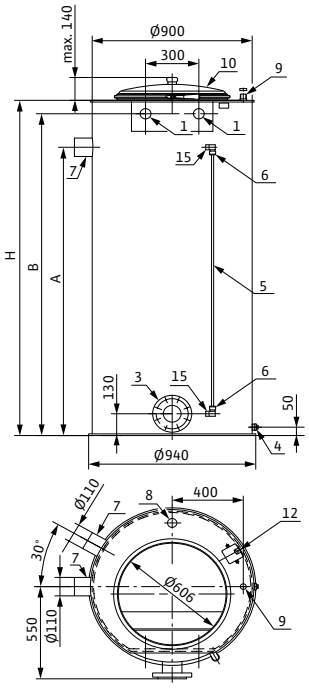

1 Drilled hole for float valve
3 Draw-off connection
4 Evacuation connection
5 Water level indicator clear-view tube
6 Water level indicator screwed connection
7 Overflow
8 Ventilation and exhaust
9 Flush connection
10 Cover with locking ring for inspection opening
12 Connection socket for float switch
15 Moulded part connection water level indicator

Wilo break tank for potable water applications, round

Dimensions, weights									
Tank contents	**Dimensions**			**Inlet**	**Extraction**	**Flush connection**	**Overflow**	**Evacuation connection**	**Weight approx.**
	A	*B*	*H*						*m*
	mm								kg
150	530	680	780	48	Rp 1½	G 1	1 x HT 100	G $^1/_2$	35
300	850	1000	1100	48	Rp 2	G 1	1 x HT 100	G $^1/_2$	42
500	1200	1400	1500	48	Rp 2	G 1	1 x HT 100	G $^1/_2$	48
800	1470	1670	1750	2 x 60	DN 80	G $1^1/_4$	2 x HT 100	G $^1/_2$	75
1000	1720	1920	2000	2 x 60	DN 100	G $1^1/_4$	2 x HT 100	G $^1/_2$	82

Mechanical accessories

Float valve

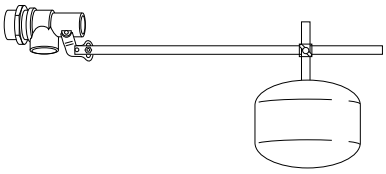

Float valve for use in open tanks with up to 1000 l useable volume for level control. Float valve R ½ as control valve in conjunction with diaphragm valve.

Technical data

Approved medium:	water without abrasive materials
Fluid temperature:	Max. 50 °C
Inlet pressure:	Max. 5 bar

Materials

Housing:	Brass
Control rod:	Stainless steel
Float:	Plastic

Volume flow rates, weights

Nominal diameter	Weight	Supply pressure				
		1 bar	2 bar	3 bar	4 bar	5 bar
	[kg]	[m³/h]				
R ½	1.4	2.1	3.0	3.6	4.2	4.7
R 1½	3.5	13.5	19.0	23.0	27.0	30.0
R 2	4.9	17.4	24.6	30.0	34.8	38.9

Diaphragm valve

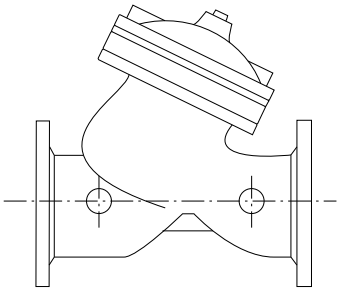

Diaphragm valve for use for level control in open tanks with a useable volume up to 1500 l in conjunction with a float valve R ½ as control valve

Technical data

Approved medium:	Water without abrasive materials
Fluid temperature:	Max. 90 °C
Inlet pressure:	Min. 0.8 bar / max. 16 bar

Materials

Housing:	Grey cast iron, plastic-coated on the outside and inside
Control rod:	Stainless steel

Volume flow rates, weights

Nominal diameter	Weight	Supply pressure				
	–	1 bar	2 bar	3 bar	4 bar	5 bar
	[kg]	[m³/h]				
DN 65	10	55	78	95	110	123
DN 80	24	90	126	154	180	200
DN 100	38	144	200	250	300	320
DN 125	68	250	350	430	500	540

Mechanical accessories

Flexible connection line

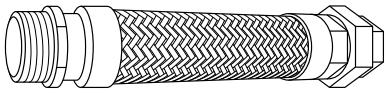

> **Application:**
The flexible connecting line ensures that the systems are connected stress-free.
Materials of hose and screwed connection: 1.4541
Materials, braiding: 1.4301
Connection:

R 1 ½/R_p 1½	Length: 400 mm
R 2/R_p 2	Length: 400 mm
R 2½/R_p 2½	Length: 400 mm

Permissible bend angle: max. 8°
PN 16

Low-water cut-out switchgear

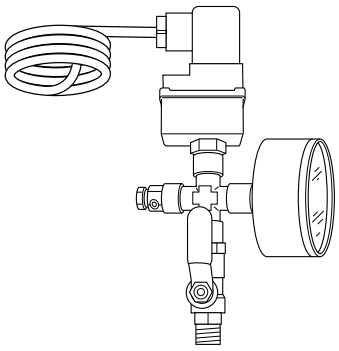

As low-water protection for direct connection.

Principle of operation
Admission pressure switch locks at 1.0 bar and enables at 1.3 bar (factory works setting in accordance with DIN 1988 (EN 806)). The factory settings cannot be modified.

Scope of delivery
- Pressure switch incl. plug and approx. 1.2 m cable
- T-piece R ¼
- Reducer R ¾ – ¼
- Pressure gauge
- Sealing material

Rubber compensator

No illustration available

> **Application:**
For reducing vibrations.

> **Scope of delivery:**
With loose flanges and sound-absorbing bedded external bracing

Working temperature max. 90 °C.
Lateral expansion 15 mm, overall length 130 mm, flange PN 16, sizes DN40-DN250

V4A stainless steel compensator

No illustration available

> **Application:**
For reducing vibrations.

> **Scope of delivery:**
With loose flanges and sound-absorbing bedded external bracing.

Working temperature max. 120 °C.
(with damper discs made of steel: up to 200 °C)
Overall length 130 mm, flange PN 16, sizes DN40-DN250

Mechanical accessories

Threaded cap

No illustration available

> **Application:**
For compensators and distributor/collector pipe.

In accordance with DIN 2566, PN 16, thread in accordance with DIN 2999
- Stainless steel 1.4571 or galvanised steel.
- DN 40, 50, 65, 80

Threaded flange

No illustration available

> **Application:**
For sealing one side of suction and pressure pipes to pressure boosting systems.
Material: Stainless steel 1.4571
- Rp 1½, 2. 2½, 3

Foot valve

No illustration available

Foot valve with integrated non-return valve.

- Red brass
- Strainer made of 1.4301 stainless steel
- Rp 1¼, 1½, 2. 2½, 3

Electrical accessories

Pressure-switch kit for low-water cut-out switchgear

No illustration available

Application:
For direct connection for low-water cut-out protection.

Scope of delivery:
Pressure control kit consisting of:
3-pole pressure switch for switching the pump directly;
includes 1.2 m cable
Intake-side stainless-steel pipework - material quality 1.4571
Gear-operated ball cock Rp ...

Function:
Supply pressure switch which disables at 1.0 bar and enables at 1.3 bar (factory setting in compliance with DIN 1988 (EN 806)).
The factory settings can be modified.

Main switch kit for isolation from the electrical supply network for COR 1 (up to 7.5 kW)

No illustration available

Application:
For direct connection for low-water cut-out protection.

Scope of delivery:
Main switch kit consisting of:
All-pole isolating main switch including 1.2 m cable
Mounting bracket for securing the main switch to the diaphragm pressure vessel
Clamps for securing the mounting bracket to the diaphragm pressure vessel

Option board for VR controller

No illustration available

Application:
For individual run and fault signals.

Signals are provided as floating contacts.

Fire fighting

Fire fighting systems

Series overview

Series	**Wilo-FLA-1**	**Wilo-FLA-2**
Product photo		
Duty chart	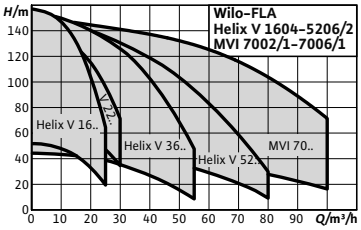	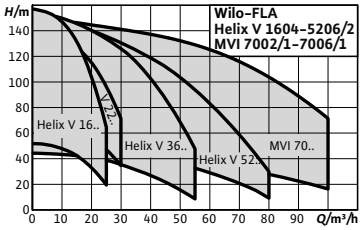
Design	Pressure boosting system for fire extinguishing systems with indirect connection in accordance with DIN 14462. With one vertical stainless steel high-pressure centrifugal pumps in glanded version	Pressure boosting system for fire extinguishing systems with indirect connection in accordance with DIN 14462. With 2 vertical stainless steel high-pressure centrifugal pumps in glanded version
Application	Fully automatic water supply for fire extinguishing systems with wall hydrants of the type "F" in domestic, commercial and public buildings, hotels, hospitals, shopping centres and also offices and industrial buildings	Fully automatic water supply for fire extinguishing systems with wall hydrants of the type "F" in domestic, commercial and public buildings, hotels, hospitals, shopping centres and also offices and industrial buildings
H_{max}	159 m	159 m
Q_{max}	100 m^3/h	100 m^3/h
Special features/ product advantages	• Heavy-duty system with multi-stage high-pressure centrifugal pumps of stainless steel of Helix V or MVI series, which satisfy all the requirements of DIN 1988 and DIN 14462 • one high-pressure multistage centrifugal pumps in combination with IE2 standard motors • Easy adjustment and operational reliability due to the FLA control unit • Pre-set throttle valve on the pressure side to protect the pump at low volume flows	• Heavy-duty system with multi-stage high-pressure centrifugal pumps of stainless steel of Helix V or MVI series, which satisfy all the requirements of DIN 1988 and DIN 14462 • 2 high-pressure multistage centrifugal pumps in combination with IE2 standard motors • Absolute operational reliability with 2-pump systems due to 100 % redundancy (2 pumps independent of each other on a common base frame, each with its own control) • Easy adjustment and operational reliability due to the FLA control unit • Pre-set throttle valve on the pressure side of each pump to protect the pump at low volume flows
Further information	Series information from page 1178 Wilo online catalogue at www.wilo.com	Series information from page 1190 Wilo online catalogue at www.wilo.com

Series overview

Series	**Wilo-EMU sprinkler pumps D..., K... and KM...**
Product photo	
Duty chart	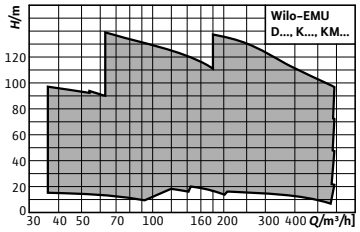
Design	Sprinkler pump with sectional construction
Application	• For pumping water to supply sprinkler systems • For pumping water without long-fibre and abrasive constituents
H_{max}	140 m
Q_{max}	600 m^3/h
Special features/ product advan-tages	• VdS certification • Certified non-return valve available as accessory • Cast material version (also available in bronze) • Pressure shroud installation possible • Vertical and horizontal installation possible (depending on the number of stages)
Further information	Series information from page 1202 Wilo online catalogue at www.wilo.com

Series description Wilo-FLA-1

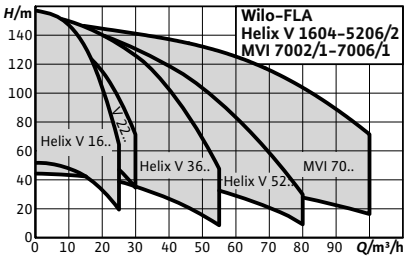

Design
Pressure boosting system for fire extinguishing systems with indirect connection in accordance with DIN 14462.
With one vertical stainless steel high-pressure centrifugal pumps in glanded version

Type key

Example:	**Wilo FLA – 1 Helix V 2204**
FLA	Fire extinguishing system
1	Number of pumps
Helix V	Pump series
22	Nominal volume flow [m^3/h]
04	Number of pump stages
K	With cartridge mechanical seal

Application
Fully automatic water supply for fire extinguishing systems with wall hydrants of the type "F" in domestic, commercial and public buildings, hotels, hospitals, shopping centres and also offices and industrial buildings

Special features/product advantages
- Heavy-duty system with multi-stage high-pressure centrifugal pumps of stainless steel of Helix V or MVI series, which satisfy all the requirements of DIN 1988 and DIN 14462
- One high-pressure multistage centrifugal pump in combination with IE2 standard motors
- Easy adjustment and operational reliability due to the FLA control unit
- Pre-set throttle valve on the pressure side to protect the pump at low volume flows

Technical data
- Mains connection 3~400 V, 50 Hz
- Max. fluid temperature 50 °C
- Operating pressure 10 or 16 bar
- Inlet pressure from break tank < 1 bar
- Nominal connection diameter on pressure side R 2" - DN 125
- Nominal connection diameter on suction side Rp 2"- DN 125
- Operating unit protection class IP 54

Equipment/function
- One pump of the series Helix V 16, 22, 36, 52 or MVI 70, equipped with IE2 motors
- Automatic pump control via FLA control unit
- Parts that come in contact with the fluid are corrosion-resistant
- Base frame made of galvanised steel, with height-adjustable vibration absorbers for insulation against structure-borne noise
- Pipework in stainless steel 1.4301
- Gear-operated shut-off ball cock or annular shut-off valve on the suction and pressure side of every pump
- Non-return valve, on pressure side
- Throttle valve of stainless steel 1.4571 on the suction side of every pump
- Pressure switch, on the pressure side
- Pressure gauge, on the pressure side
- Diaphragm pressure vessel 8 l, PN16, on the pressure side
- Accessories: Atmospherically ventilated break tank in accordance with DIN 14462 with free exhaust in accordance with EN 13077, type AB in accordance with DIN EN 1717

Series description Wilo-FLA-1

Terminal diagram

FLA-System, Direkt-Anlauf

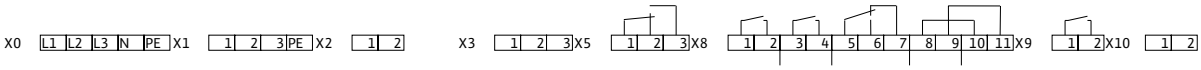

X0: Mains connection
X1: Pump connection
X2: Pressure switch/limit switch loop
X3: Protection against low water level
- 1, 2 float switch, level sensor
- 1, 2. 3 level electrodes
X5: potential-free contact
- 1, 2. 3 pump on (not in test run mode)

X8: potential-free contact
- 1, 2 operational readiness
- 3, 4 pump on
- 5, 6, 7 collective fault signal
- 8, 9 emergency spillway monitoring (float switch)
- 10, 11 emergency spillway monitoring (signal)
X9: potential-free contact
- 1, 2 mains power supply monitoring
X10: Service terminals (attention: 230 VAC at pump start)

Terminal diagram

FLA-System, Y-Δ-Anlauf

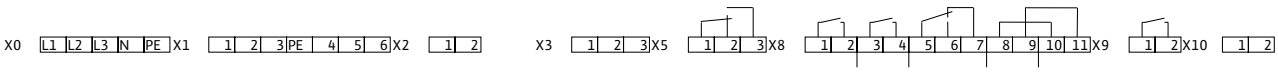

X0: Mains connection
X1: Pump connection
X2: Pressure switch/limit switch loop
X3: Protection against low water level
- 1, 2 float switch, level sensor
- 1, 2. 3 level electrodes
X5: potential-free contact
- 1, 2. 3 pump on (not in test run mode)

X8: potential-free contact
- 1, 2 operational readiness
- 3, 4 pump on
- 5, 6, 7 collective fault signal
- 8, 9 emergency spillway monitoring (float switch)
- 10, 11 emergency spillway monitoring (signal)
X9: potential-free contact
- 1, 2 mains power supply monitoring
X10: Service terminals (attention: 230 VAC at pump start)

Technical data Wilo-FLA-1

Pump curves

Wilo-FLA-1 Helix V 1604-1612

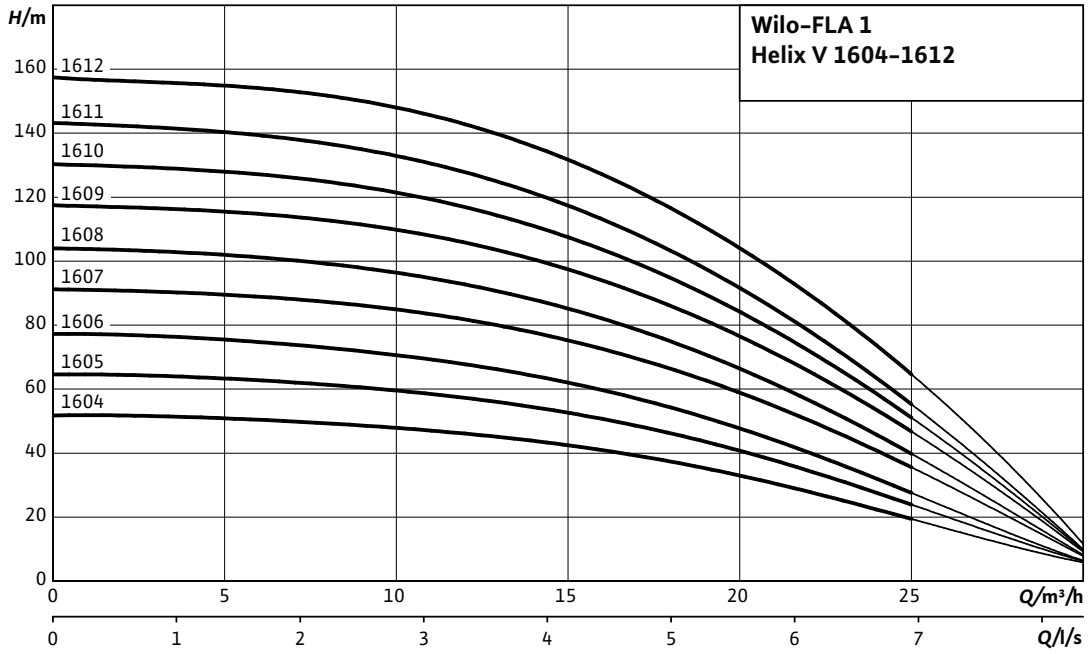

Motor data					
Wilo FLA-1...	**Nominal motor power**	**Nominal current 3~400 V, 50 Hz**	**Motor efficiency**		
	P_2	I_N	$\eta_{m\ 50\%}$	$\eta_{m\ 75\%}$	$\eta_{m\ 100\%}$
	kW	A	%		
Helix V 1604 PN10	3	5.8	82.5	85.0	84.6
Helix V 1605 PN10	4	8.2	85.0	85.8	85.8
Helix V 1606 PN10	4	8.2	85.0	85.8	85.8
Helix V 1607 PN10	5.5	11.2	86.5	88.8	88.6
Helix V 1608 PN16	5.5	11.2	86.5	88.8	88.6
Helix V 1609 PN16	7.5	14.7	88.5	89.9	89.5
Helix V 1610 PN16	7.5	14.7	88.5	89.9	89.5
Helix V 1611 PN16	7.5	14.7	88.5	89.9	89.5
Helix V 1612 PN16	9	17.2	86.6	88.4	88.8

Motor efficiency based on 400 V, 50 Hz

Technical data Wilo-FLA-1

Dimension drawing

FLA-1 Helix V 1604 PN8 - 1606 PN8

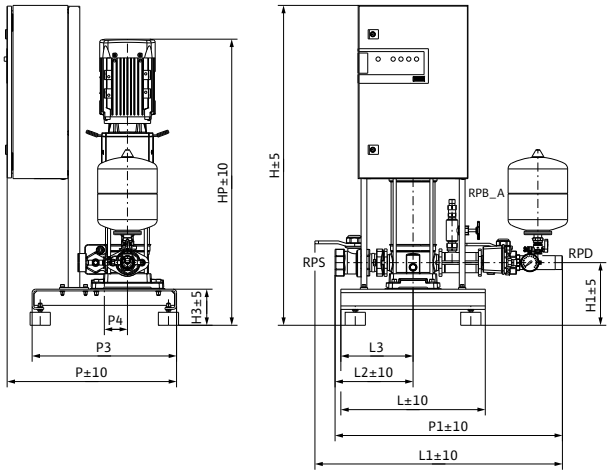

Dimension drawing

FLA-1 Helix V 1607 PN10 - 1611 PN16

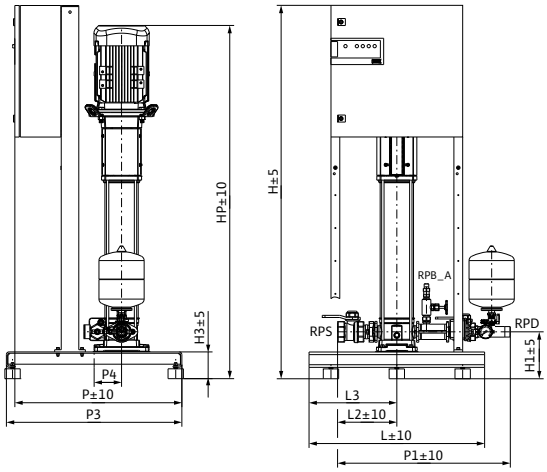

Dimension drawing

FLA-1 Helix V 1612 PN16

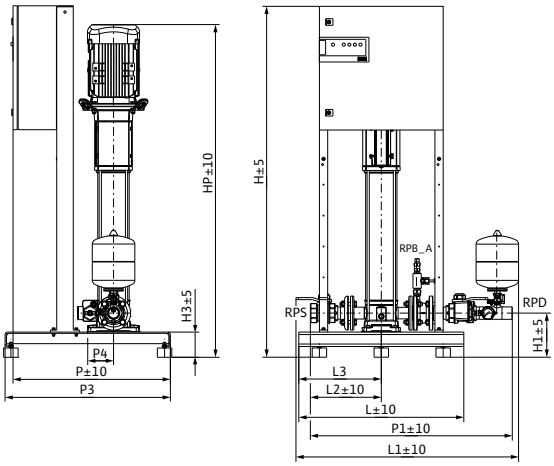

Dimensions, weights

Wilo FLA-1...	Nominal diameters of the pipe connections on suction side	Nominal diameters of pipe connections on the pressure side	Dimensions												Weight approx.
	RPS	*RPD*	*H*	*H1*	*H3*	*HP*	*L*	*L1*	*L2*	*L3*	*P*	*P1*	*P3*	*P4*	*m*
			mm												kg
Helix V 1604 PN10	Rp 2	R 1½	1105	215	125	989	500	862	270	250	585	787	500	80	115
Helix V 1605 PN10	Rp 2	R 1½	1105	215	125	1085	500	862	270	250	585	787	500	80	129
Helix V 1606 PN10	Rp 2	R 1½	1105	215	125	1135	500	862	270	250	585	787	500	80	131
Helix V 1607 PN10	Rp 2	R 1½	1705	215	125	1327	800	–	270	400	760	787	800	125	171
Helix V 1608 PN16	Rp 2	R 1½	1705	215	125	1377	800	–	270	400	760	787	800	125	173
Helix V 1609 PN16	Rp 2	R 1½	1705	215	125	1462	800	–	270	400	760	787	800	125	187
Helix V 1610 PN16	Rp 2	R 1½	1705	215	125	1612	800	–	270	400	760	787	800	125	190
Helix V 1611 PN16	Rp 2	R 1½	1705	215	125	1612	800	–	270	400	760	787	800	125	191
Helix V 1612 PN16	Rp 2	R 2	1705	215	125	1612	800	1067	340	400	760	962	800	125	204

Technical data Wilo-FLA-1

Pump curves

Wilo-FLA-1 Helix V 2204-2208

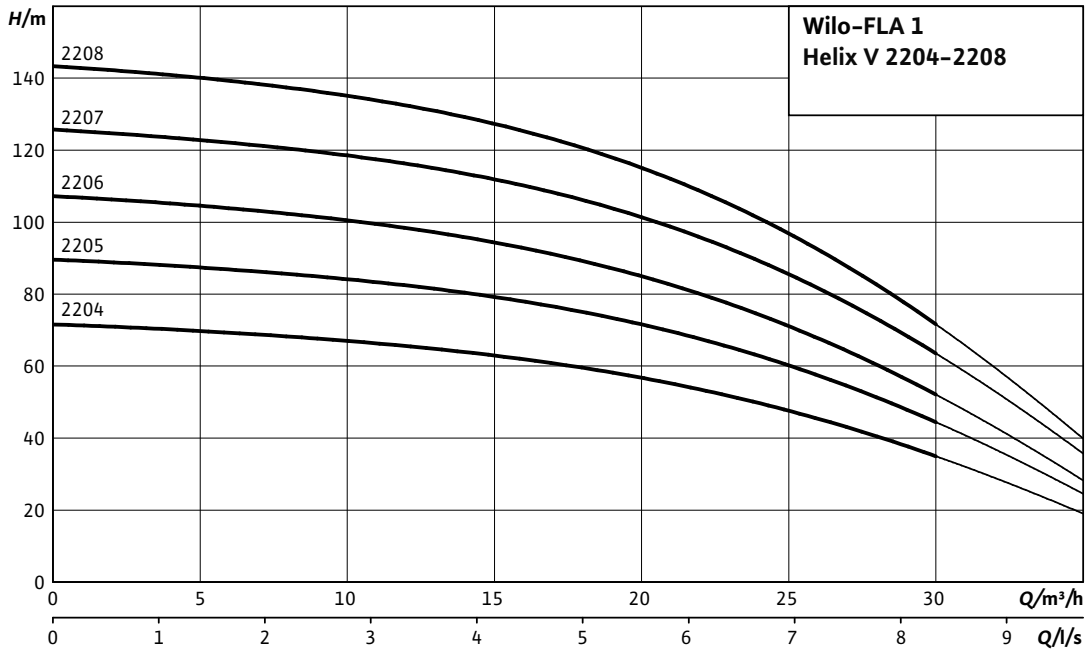

Motor data					
Wilo FLA-1...	**Nominal motor power**	**Nominal current 3~400 V, 50 Hz**	**Motor efficiency**		
	P_2	I_N	$\eta_{m\ 50\%}$	$\eta_{m\ 75\%}$	$\eta_{m\ 100\%}$
	kW	A	%		
Helix V 2204 PN10	5.5	11.2	86.5	88.8	88.6
Helix V 2205 PN10	7.5	14.7	88.5	89.9	89.5
Helix V 2206 PN16	7.5	14.7	88.5	89.9	89.5
Helix V 2207 PN16	9	17.2	86.6	88.4	88.8
Helix V 2208 PN16	11	20.3	87.5	89.3	89.4

Motor efficiency based on 400 V, 50 Hz

Technical data Wilo-FLA-1

Dimension drawing

FLA-1 Helix V 2204 PN8 – 2208 PN16

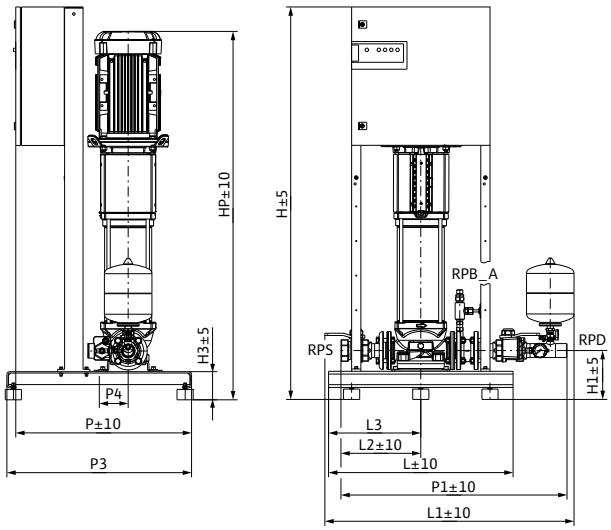

Dimensions, weights															
Wilo FLA-1...	**Nominal diameters of the pipe connec-tions on suction side**	**Nominal diameters of pipe con-nections on the pres-sure side**	**Dimensions**												**Weight approx.**
	RPS	*RPD*	*H*	*H1*	*H3*	*HP*	*L*	*L1*	*L2*	*L3*	*P*	*P1*	*P3*	*P4*	*m*
			mm												kg
Helix V 2204 PN10	Rp 2	R 2	1705	215	125	1252	800	1067	340	400	760	962	800	125	200
Helix V 2205 PN10	Rp 2	R 2	1705	215	125	1337	800	1067	340	400	760	962	800	125	210
Helix V 2206 PN16	Rp 2	R 2	1705	215	125	1387	800	1067	340	400	760	962	800	125	212
Helix V 2207 PN16	Rp 2	R 2	1705	215	125	1437	800	1067	340	400	760	962	800	125	214
Helix V 2208 PN16	Rp 2	R 2	1705	215	125	1598	800	1067	340	400	760	962	800	125	254

Technical data Wilo-FLA-1

Pump curves

Wilo-FLA-1 Helix V 3602/1-3606

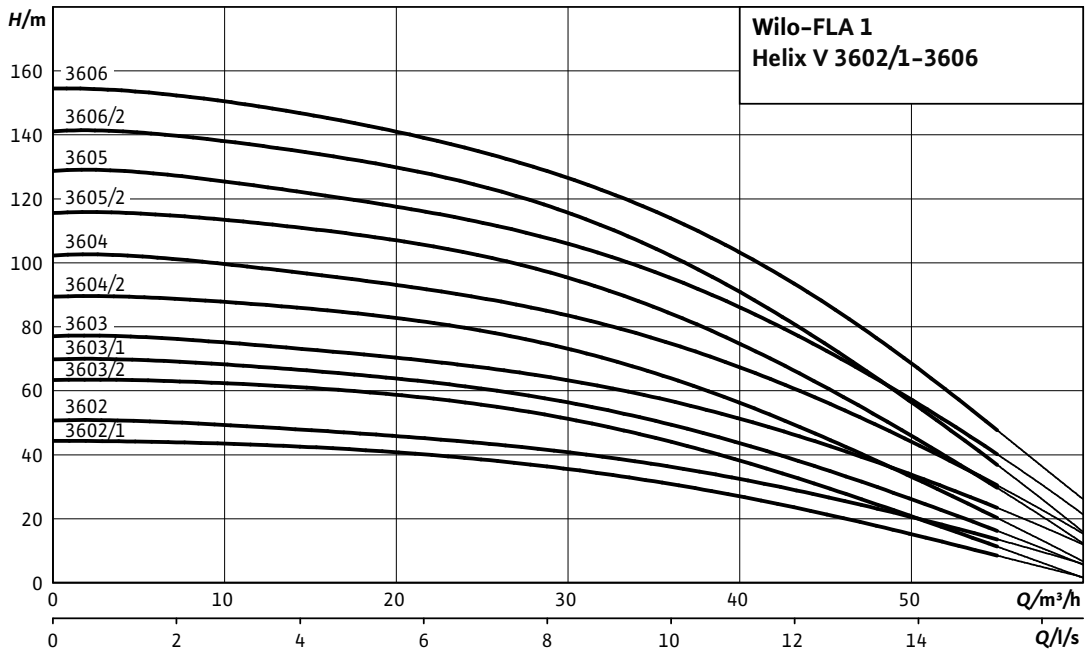

Motor data					
Wilo FLA-1...	**Nominal motor power**	**Nominal current 3~400 V, 50 Hz**	**Motor efficiency**		
	P_2	I_N	$\eta_{m\ 50\%}$	$\eta_{m\ 75\%}$	$\eta_{m\ 100\%}$
	kW	A	%		
Helix V 3602/1 PN10	5.5	11.2	86.5	88.8	88.6
Helix V 3602 PN10	5.5	11.2	86.5	88.8	88.6
Helix V 3603/2 PN10	7.5	14.7	88.5	89.9	89.5
Helix V 3603/1 PN10	7.5	14.7	88.5	89.9	89.5
Helix V 3603 PN10	9	17.2	86.6	88.4	88.8
Helix V 3604/2 PN10	11	20.3	87.5	89.3	89.4
Helix V 3604 PN16	11	20.3	87.5	89.3	89.4
Helix V 3605/2 PN16	15	26.2	88.4	90.2	90.3
Helix V 3605 PN16	15	26.2	88.4	90.2	90.3
Helix V 3606/2 PN16	15	26.2	88.4	90.2	90.3
Helix V 3606 PN16	18.5	30	89.0	90.8	90.9

Motor efficiency based on 400 V, 50 Hz

Technical data Wilo-FLA-1

Dimension drawing

FLA-1 Helix V 3602/1 PN8 - 3606 PN16

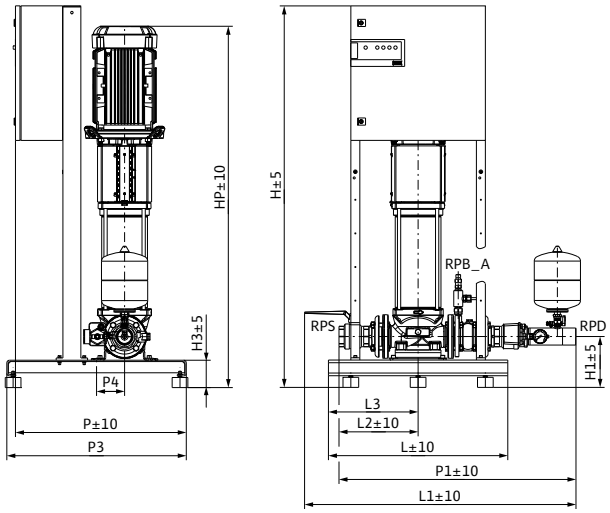

Dimensions, weights															
Wilo FLA-1...	**Nominal diameters of the pipe connec-tions on suction side**	**Nominal diameters of pipe connec-tions on the pres-sure side**	**Dimensions**												**Weight approx.**
	RPS	*RPD*	*H*	*H1*	*H3*	*HP*	*L*	*L1*	*L2*	*L3*	*P*	*P1*	*P3*	*P4*	*m*
			mm												kg
Helix V 3602/1 PN10	Rp 2½	R 2½	1705	230	125	1167	800	1157	354	400	760	1057	800	125	198
Helix V 3602 PN10	Rp 2½	R 2½	1705	230	125	1167	800	1157	354	400	760	1057	800	125	198
Helix V 3603/2 PN10	Rp 2½	R 2½	1705	230	125	1302	800	1157	354	400	760	1057	800	125	208
Helix V 3603/1 PN10	Rp 2½	R 2½	1705	230	125	1302	800	1157	354	400	760	1057	800	125	208
Helix V 3603 PN10	Rp 2½	R 2½	1705	230	125	1302	800	1157	354	400	760	1057	800	125	214
Helix V 3604/2 PN10	Rp 2½	R 2½	1705	230	125	1479	800	1157	354	400	760	1057	800	125	250
Helix V 3604 PN16	Rp 2½	R 2½	1705	230	125	1479	800	1157	354	400	760	1057	800	125	250
Helix V 3605/2 PN16	Rp 2½	R 2½	1705	230	125	1546	800	1157	354	400	760	1057	800	125	266
Helix V 3605 PN16	Rp 2½	R 2½	1705	230	125	1546	800	1157	354	400	760	1057	800	125	266
Helix V 3606/2 PN16	Rp 2½	R 2½	1705	230	125	1613	800	1157	354	400	760	1057	800	125	270
Helix V 3606 PN16	Rp 2½	R 2½	1705	230	125	1613	800	1157	354	400	760	1057	800	125	281

Technical data Wilo-FLA-1

Pump curves

Wilo-FLA-1 Helix V 5202-5206/2

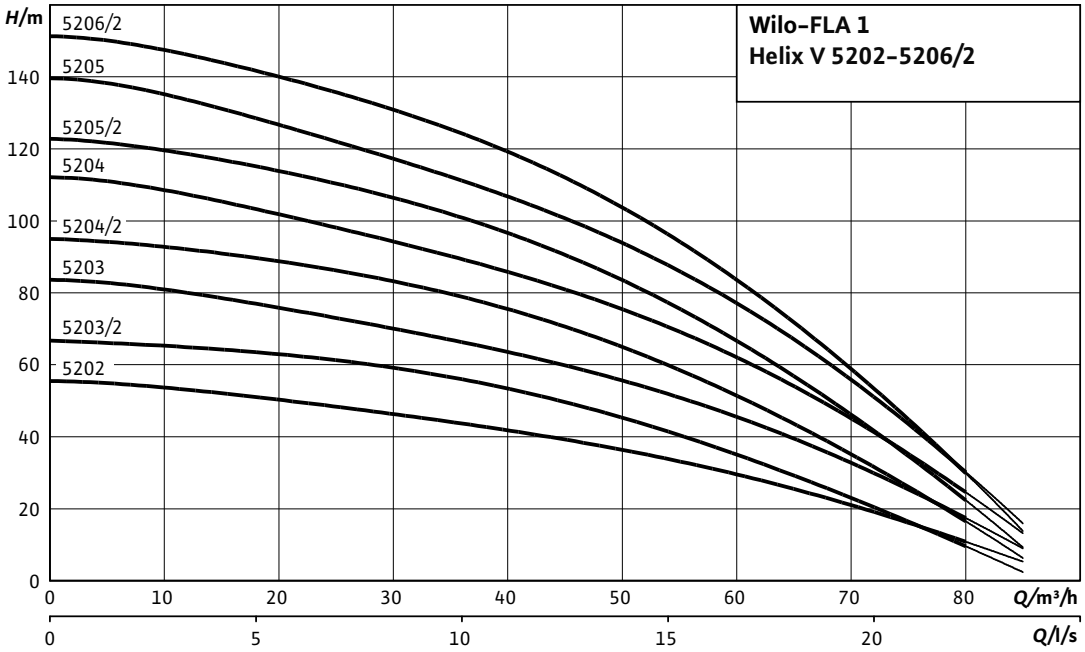

Motor data					
Wilo FLA-1...	**Nominal motor power**	**Nominal current 3~400 V, 50 Hz**	**Motor efficiency**		
	P_2	I_N	$\eta_{m\ 50\%}$	$\eta_{m\ 75\%}$	$\eta_{m\ 100\%}$
	kW	A	%		
Helix V 5202 PN10	7.5	14.7	88.5	89.9	89.5
Helix V 5203/2 PN10	11	20.3	87.5	89.3	89.4
Helix V 5203 PN10	11	20.3	87.5	89.3	89.4
Helix V 5204/2 PN10	15	26.2	88.4	90.2	90.3
Helix V 5204 PN16	15	26.2	88.4	90.2	90.3
Helix V 5205/2 PN16	18.5	32	89.0	90.8	90.9
Helix V 5205 PN16	18.5	32	89.0	90.8	90.9
Helix V 5206/2 PN16	22	38	89.5	90.9	91.3

Motor efficiency based on 400 V, 50 Hz

Technical data Wilo-FLA-1

Dimension drawing

FLA-1 Helix V 5202 PN8 - 5206/2 PN16

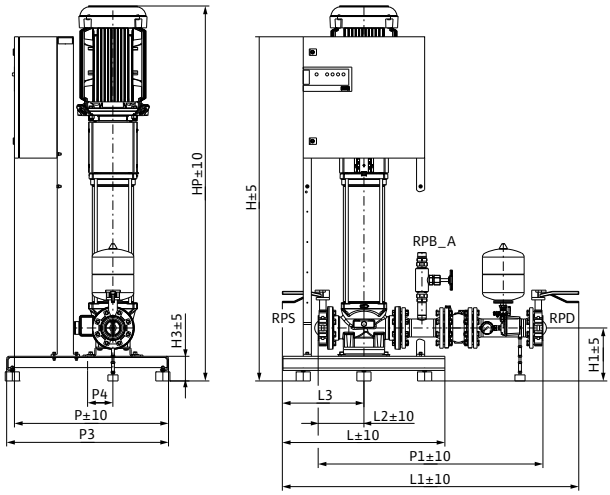

Dimensions, weights

Wilo FLA-1...	Nominal diameters of the pipe connec-tions on suction side	Nominal diameters of pipe connec-tions on the pres-sure side	Dimensions												Weight approx.
	RPS	*RPD*	*H*	*H1*	*H3*	*HP*	*L*	*L1*	*L2*	*L3*	*P*	*P1*	*P3*	*P4*	*m*
			mm												kg
Helix V 5202 PN10	DN 80	DN 80	1705	265	125	1269	800	1472	231	400	760	1118	800	125	219
Helix V 5203/2 PN10	DN 80	DN 80	1705	265	125	1514	800	1472	231	400	760	1118	800	125	258
Helix V 5203 PN10	DN 80	DN 80	1705	265	125	1514	800	1472	231	400	760	1118	800	125	258
Helix V 5204/2 PN10	DN 80	DN 80	1705	265	125	1614	800	1472	231	400	760	1118	800	125	276
Helix V 5204 PN16	DN 80	DN 80	1705	265	125	1614	800	1472	231	400	760	1118	800	125	276
Helix V 5205/2 PN16	DN 80	DN 80	1705	265	125	1714	800	1472	231	400	760	1118	800	125	318
Helix V 5205 PN16	DN 80	DN 80	1705	265	125	1714	800	1472	231	400	760	1118	800	125	318
Helix V 5206/2 PN16	DN 80	DN 80	1705	265	125	1857	800	1472	231	400	760	1118	800	125	346

Technical data Wilo-FLA-1

Pump curves

Wilo-FLA-1 MVI 7002/1-7606/1

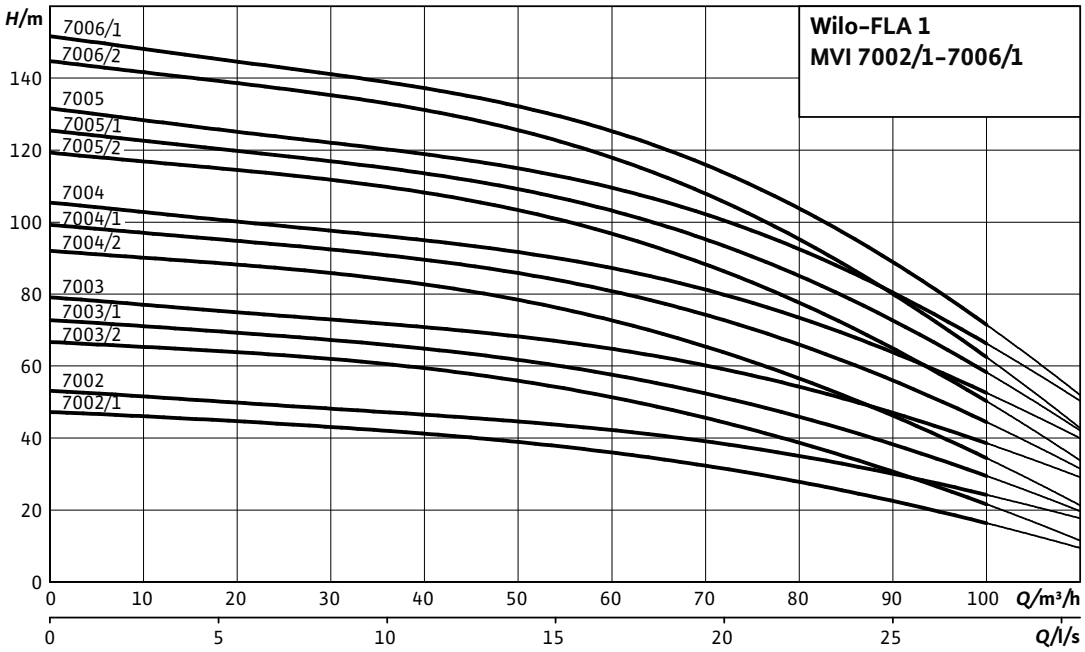

Motor data

Wilo FLA-1...	Nominal motor power	Nominal current 3~400 V, 50 Hz	Motor efficiency		
	P_2	I_N	$\eta_{m\ 50\%}$	$\eta_{m\ 75\%}$	$\eta_{m\ 100\%}$
	kW	A	%		
MVI 7002/1 PN10	9	17	86.6	88.4	88.8
MVI 7002 PN10	11	50	87.5	89.3	89.4
MVI 7003/2 PN10	15	26.5	88.4	90.2	90.3
MVI 7003/1 PN10	15	26.5	88.4	90.2	90.3
MVI 7003 PN10	18.5	32.2	89.0	90.8	90.9
MVI 7004/2 PN10	18.5	32.2	89.0	90.8	90.9
MVI 7004/1 PN16	22	38.1	89.5	90.9	91.3
MVI 7004 PN16	22	38.1	89.5	90.9	91.3
MVI 7005/2 PN16	30	53	90.3	91.8	92.0
MVI 7005/1 PN16	30	53	90.3	91.8	92.0
MVI 7005 PN16	30	53	90.3	91.8	92.0
MVI 7006/2 PN16	30	53	90.3	91.8	92.0
MVI 7006/1 PN16	37	64.5	90.1	91.9	92.5

Motor efficiency based on 400 V, 50 Hz

Technical data Wilo-FLA-1

Dimension drawing

FLA-1 MVI 7002/1 PN8 - 7004 PN16

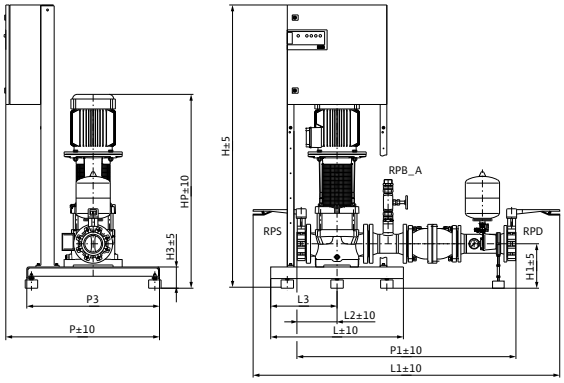

Dimension drawing

FLA-1 MVI 7005/2 PN16 - 7005 PN16

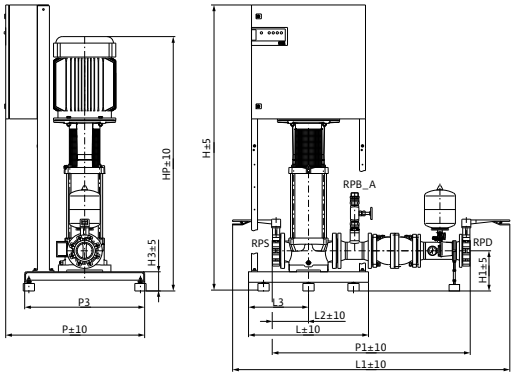

Dimension drawing

FLA-1 MVI 7006/2 PN16 - 7006/1 PN16

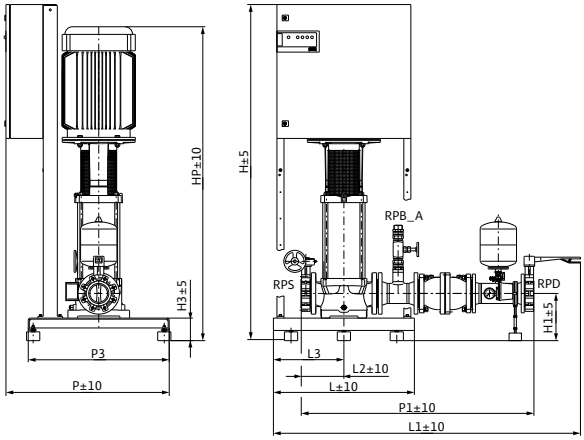

Dimensions, weights

Wilo FLA-1...	Nominal diameters of the pipe connections on suction side	Nominal diameters of pipe connections on the pressure side	Dimensions											Weight approx.
	RPS	*RPD*	*H*	*H1*	*H3*	*HP*	*L*	*L1*	*L2*	*L3*	*P*	*P1*	*P3*	*m*
			mm											kg
MVI 7002/1 PN10	DN 100	DN 100	1705	270	130	1169	800	1852	244	400	925	1324	800	307
MVI 7002 PN10	DN 100	DN 100	1705	270	130	1169	800	1852	244	400	925	1324	800	308
MVI 7003/2 PN10	DN 100	DN 100	1705	270	130	1448	800	1852	244	400	925	1324	800	344
MVI 7003/1 PN10	DN 100	DN 100	1705	270	130	1448	800	1852	244	400	925	1324	800	344
MVI 7003 PN10	DN 100	DN 100	1705	270	130	1448	800	1852	244	400	925	1324	800	361
MVI 7004/2 PN10	DN 100	DN 100	1705	270	130	1533	800	1852	244	400	925	1324	800	365
MVI 7004/1 PN16	DN 100	DN 100	1705	270	130	1576	800	1852	244	400	925	1324	800	391
MVI 7004 PN16	DN 100	DN 100	1705	270	130	1576	800	1852	244	400	925	1324	800	391
MVI 7005/2 PN16	DN 100	DN 100	1905	270	130	1697	800	1852	244	400	925	1324	800	474
MVI 7005/1 PN16	DN 100	DN 100	1905	270	130	1697	800	1852	244	400	925	1324	800	474
MVI 7005 PN16	DN 100	DN 100	1905	270	130	1697	800	1852	244	400	925	1324	800	474
MVI 7006/2 PN16	DN 100	DN 100	1905	270	130	1782	800	1743	244	400	925	1324	800	485
MVI 7006/1 PN16	DN 100	DN 100	1905	270	130	1782	800	1743	244	400	925	1324	800	515

Series description Wilo-FLA-2

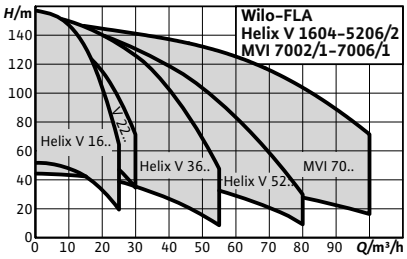

Design
Pressure boosting system for fire extinguishing systems with indirect connection in accordance with DIN 14462.
With 2 vertical stainless steel high-pressure centrifugal pumps in glanded version

Type key

Example:	**Wilo FLA – 2 Helix V 2204**
FLA	Fire extinguishing system
2	Number of pumps
Helix V	Pump series
22	Nominal volume flow [m^3/h]
04	Number of pump stages
K	With cartridge mechanical seal

Application
Fully automatic water supply for fire extinguishing systems with wall hydrants of the type "F" in domestic, commercial and public buildings, hotels, hospitals, shopping centres and also offices and industrial buildings

Special features/product advantages
- Heavy-duty system with multi-stage high-pressure centrifugal pumps of stainless steel of Helix V or MVI series, which satisfy all the requirements of DIN 1988 and DIN 14462
- 2 high-pressure multistage centrifugal pumps in combination with IE2 standard motors
- Absolute operational reliability with 2-pump systems due to 100 % redundancy (2 pumps independent of each other on a common base frame, each with its own control)
- Easy adjustment and operational reliability due to the FLA control unit
- Pre-set throttle valve on the pressure side of each pump to protect the pump at low volume flows

Technical data
- Mains connection 3~400 V, 50 Hz
- Max. fluid temperature 50 °C
- Operating pressure 10 or 16 bar
- Inlet pressure from break tank < 1 bar
- Nominal connection diameter on pressure side R 2" - DN 125
- Nominal connection diameter on suction side Rp 2"- DN 125
- Operating unit protection class IP 54

Equipment/function
- 2 pumps of the series Helix V 16, 22, 36, 52 or MVI 70, equipped with IE2 motors
- Automatic pump control via FLA control unit
- Components that come in contact with the fluid are corrosion-resistant
- Base frame made of galvanised steel, with height-adjustable vibration absorbers for insulation against structure-borne noise
- Pipework in stainless steel 1.4301
- Gear-operated shut-off ball cock or annular shut-off valve on the suction and pressure side of every pump
- Non-return valve, on pressure side
- Throttle valve of stainless steel 1.4571 on the suction side of every pump
- Pressure switch, on the pressure side
- Pressure gauge, on the pressure side
- Diaphragm pressure vessel 8 l, PN16, on the pressure side
- Accessories: Atmospherically ventilated break tank in accordance with DIN 14462 with free exhaust in accordance with EN 13077, type AB in accordance with DIN EN 1717

Series description Wilo-FLA-2

Terminal diagram

FLA-System, Direkt-Anlauf

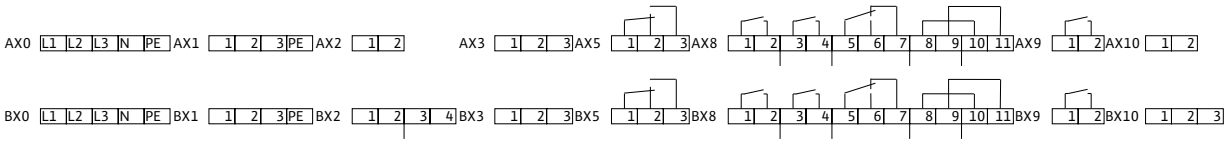

AX0: Mains connection
AX1: Pump connection
AX2: Pressure switch/limit switch loop
AX3: Protection against low water level
- 1, 2 float switch, level sensor
- 1, 2. 3 level electrodes
AX5: potential-free contact
- 1, 2. 3 pump on (not in test run mode)
AX8: potential-free contact
- 1, 2 operational readiness
- 3, 4 pump on
- 5, 6, 7 collective fault signal
- 8, 9 emergency spillway monitoring (float switch)
- 10, 11 emergency spillway monitoring (signal)
AX9: potential-free contact
- 1, 2 mains power supply monitoring
AX10: Service terminals (attention: 230 VAC at pump start)

BX0: Mains connection
BX1: Pump connection
BX2: Pressure switch2/limit switch loop
- 1, 2 pressure switch2
- 3, 4 pressure switch3
BX3: Protection against low water level
- 1, 2 float switch, level sensor
- 1, 2. 3 level electrodes
BX5: potential-free contact
- 1, 2. 3 pump on (not in test run mode)
BX8: potential-free contact
- 1, 2 operational readiness
- 3, 4 pump on
- 5, 6, 7 collective fault signal
- 8, 9 emergency spillway monitoring (float switch)
- 10, 11 emergency spillway monitoring (signal)
BX9: potential-free contact
- 1, 2 mains power supply monitoring
BX10: Service terminals (attention: 230 VAC at pump start)

Terminal diagram

FLA-System, Y-Δ-Anlauf

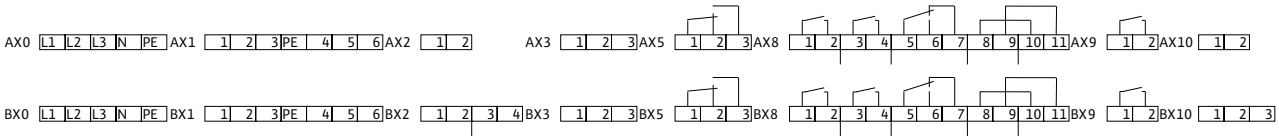

AX0: Mains connection
AX1: Pump connection
AX2: Pressure switch/limit switch loop
AX3: Protection against low water level
- 1, 2 float switch, level sensor
- 1, 2. 3 level electrodes
AX5: potential-free contact
- 1, 2. 3 pump on (not in test run mode)
AX8: potential-free contact
- 1, 2 operational readiness
- 3, 4 pump on
- 5, 6, 7 collective fault signal
- 8, 9 emergency spillway monitoring (float switch)
- 10, 11 emergency spillway monitoring (signal)
AX9: potential-free contact
- 1, 2 mains power supply monitoring
AX10: Service terminals (attention: 230 VAC at pump start)

BX0: Mains connection
BX1: Pump connection
BX2: Pressure switch2/limit switch loop
- 1, 2 pressure switch2
- 3, 4 pressure switch3
BX3: Protection against low water level
- 1, 2 float switch, level sensor
- 1, 2. 3 level electrodes
BX5: potential-free contact
- 1, 2. 3 pump on (not in test run mode)
BX8: potential-free contact
- 1, 2 operational readiness
- 3, 4 pump on
- 5, 6, 7 collective fault signal
- 8, 9 emergency spillway monitoring (float switch)
- 10, 11 emergency spillway monitoring (signal)
BX9: potential-free contact
- 1, 2 mains power supply monitoring
BX10: Service terminals (attention: 230 VAC at pump start)

Technical data Wilo-FLA-2

Pump curves

Wilo-FLA-2 Helix V 1604-1612

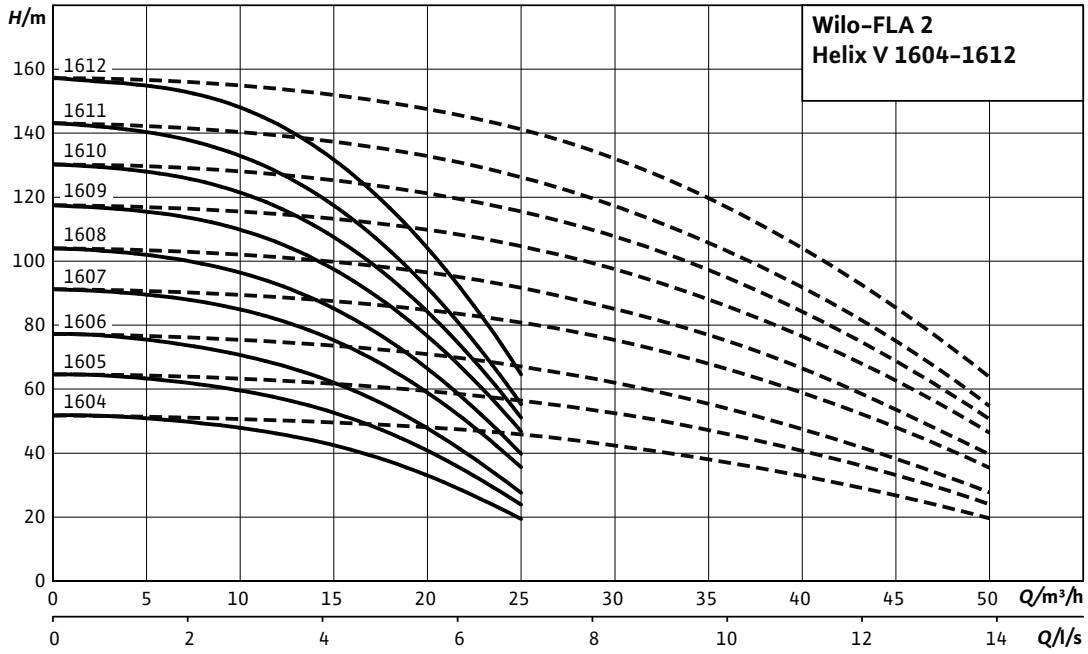

Motor data per pump					
Wilo FLA-2...	**Nominal motor power**	**Nominal current 3~400 V, 50 Hz**	**Motor efficiency**		
	P_2	I_N	$\eta_{m\ 50\%}$	$\eta_{m\ 75\%}$	$\eta_{m\ 100\%}$
	kW	A	%		
Helix V 1604 PN10	3	5.8	82.5	85.0	84.6
Helix V 1605 PN10	4	8.2	85.0	85.8	85.8
Helix V 1606 PN10	4	8.2	85.0	85.8	85.8
Helix V 1607 PN10	5.5	11.2	86.5	88.8	88.6
Helix V 1608 PN16	5.5	11.2	86.5	88.8	88.6
Helix V 1609 PN16	7.5	14.7	88.5	89.9	89.5
Helix V 1610 PN16	7.5	14.7	88.5	89.9	89.5
Helix V 1611 PN16	7.5	14.7	88.5	89.9	89.5
Helix V 1612 PN16	9	17.2	86.6	88.4	88.8

Motor efficiency based on 400 V, 50 Hz

Technical data Wilo-FLA-2

Dimension drawing

FLA-2 Helix V 1604 PN8 - 1606 PN8

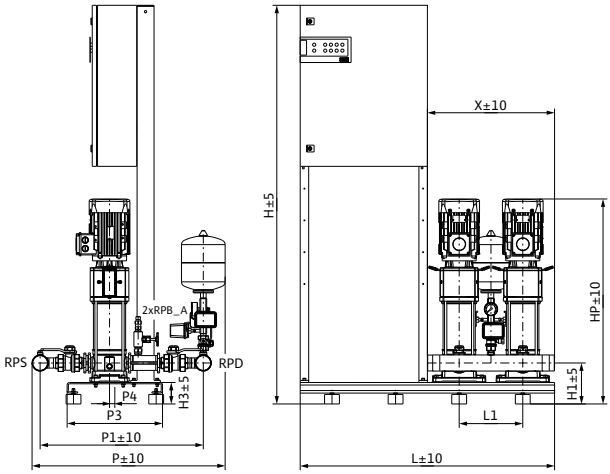

Dimension drawing

FLA-2 Helix V 1607 PN10 - 1608 PN16

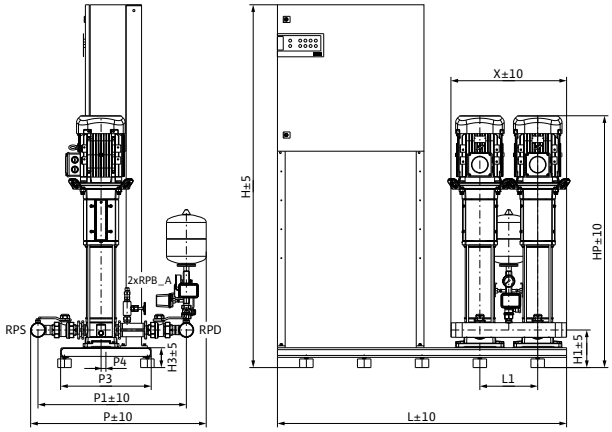

Dimension drawing

FLA-2 Helix V 1609 PN16 - 1611 PN16

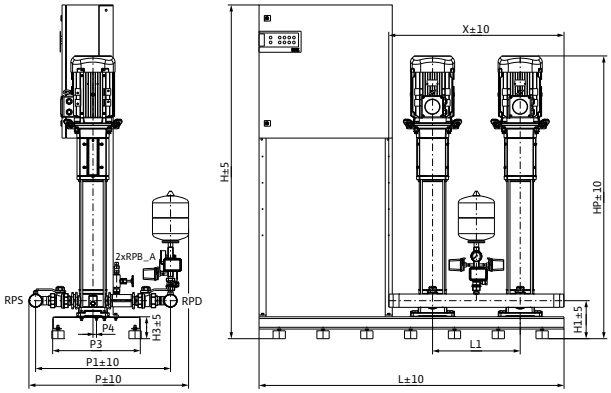

Dimension drawing

FLA-2 Helix V 1612 PN16

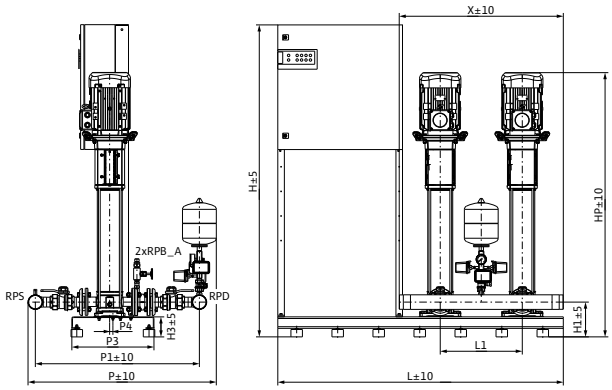

Dimensions, weights

Wilo FLA-2...	Nominal diameters of the pipe connections on suction side	Nominal diameters of pipe connections on the pressure side	Dimensions										Weight approx.
	RPS	*RPD*	*H*	*H1*	*H3*	*HP*	*L*	*L1*	*P*	*P1*	*P3*	*P4*	*m*
			mm										kg
Helix V 1604 PN10	R 2½	R 2½	1885	195	105	969	1200	300	912	770	450	25	221
Helix V 1605 PN10	R 2½	R 2½	1885	195	105	1065	1200	300	912	770	450	25	247
Helix V 1606 PN10	R 2½	R 2½	1885	195	105	1115	1200	300	912	770	450	25	249
Helix V 1607 PN10	R 2½	R 2½	1885	195	105	1307	1500	300	912	770	470	25	335
Helix V 1608 PN16	R 2½	R 2½	1885	195	105	1357	1500	300	912	770	470	25	340
Helix V 1609 PN16	R 2½	R 2½	1905	215	125	1462	1740	500	912	770	500	25	392
Helix V 1610 PN16	R 2½	R 2½	1905	215	125	1612	1740	500	912	770	500	20	396
Helix V 1611 PN16	R 2½	R 2½	1905	215	125	1612	1740	500	912	770	500	20	399
Helix V 1612 PN16	R 3	R 3	1905	215	125	1612	1740	500	1147	1000	500	20	572

Technical data Wilo-FLA-2

Pump curves

Wilo-FLA-2 Helix V 2204-2208

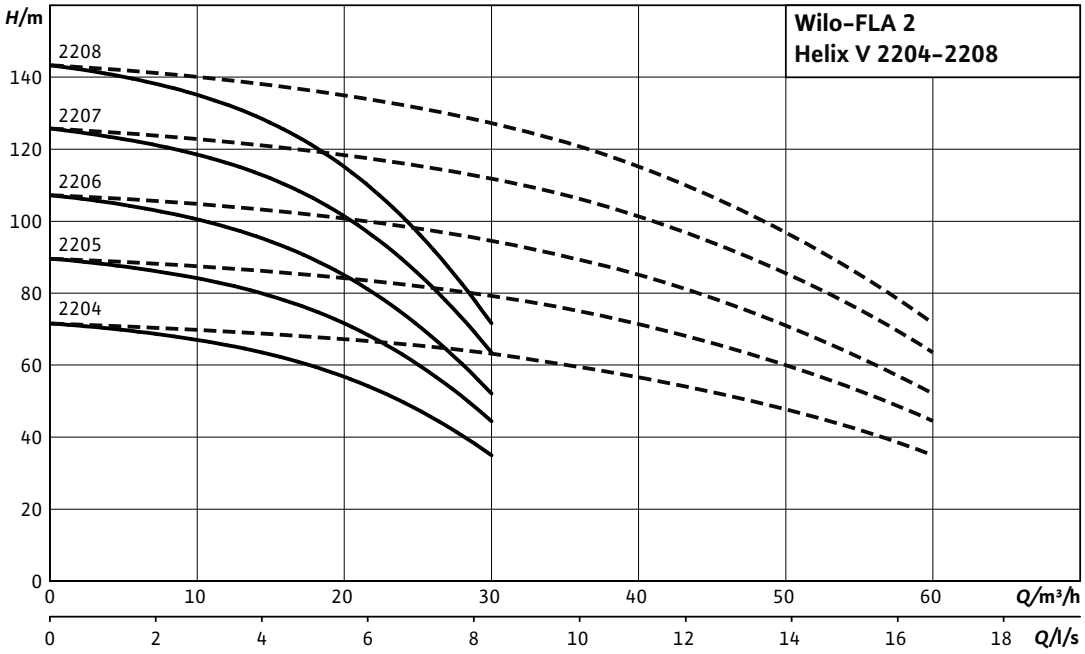

Motor data per pump					
Wilo FLA-2...	**Nominal motor power**	**Nominal current 3~400 V, 50 Hz**	**Motor efficiency**		
	P_2	I_N	$\eta_{m\ 50\%}$	$\eta_{m\ 75\%}$	$\eta_{m\ 100\%}$
	kW	A	%		
Helix V 2204 PN10	5.5	11.2	86.5	88.8	88.6
Helix V 2205 PN10	7.5	14.7	88.5	89.9	89.5
Helix V 2206 PN16	7.5	14.7	88.5	89.9	89.5
Helix V 2207 PN16	9	17.2	86.6	88.4	88.8
Helix V 2208 PN16	11	20.3	87.5	89.3	89.4

Motor efficiency based on 400 V, 50 Hz

Technical data Wilo-FLA-2

Dimension drawing

FLA-2 Helix V 2204 PN8 - 2208 PN16

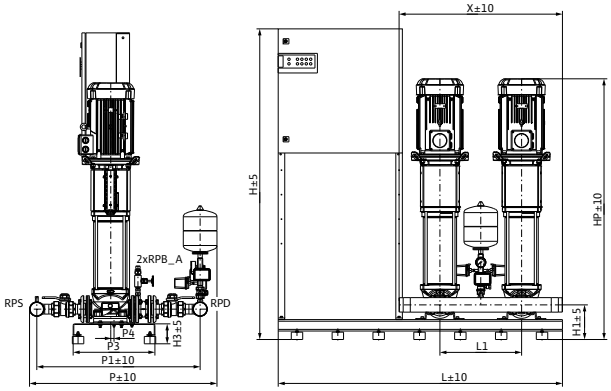

Dimensions, weights

Wilo FLA-2...	Nominal diameters of the pipe connections on suction side	Nominal diameters of pipe connections on the pressure side	Dimensions										Weight approx.
	RPS	*RPD*	*H*	*H1*	*H3*	*HP*	*L*	*L1*	*P*	*P1*	*P3*	*P4*	*m*
			mm										kg
Helix V 2204 PN10	R 3	R 3	1905	215	125	1252	1740	500	1147	1000	500	20	576
Helix V 2205 PN10	R 3	R 3	1905	215	125	1337	1740	500	1147	1000	500	20	598
Helix V 2206 PN16	R 3	R 3	1905	215	125	1387	1740	500	1147	1000	500	20	602
Helix V 2207 PN16	R 3	R 3	1905	215	125	1437	1740	500	1147	1000	500	20	623
Helix V 2208 PN16	R 3	R 3	1905	215	125	1598	1740	500	1147	1000	500	20	703

Technical data Wilo-FLA-2

Pump curves

Wilo-FLA-2 Helix V 3602/1-3606

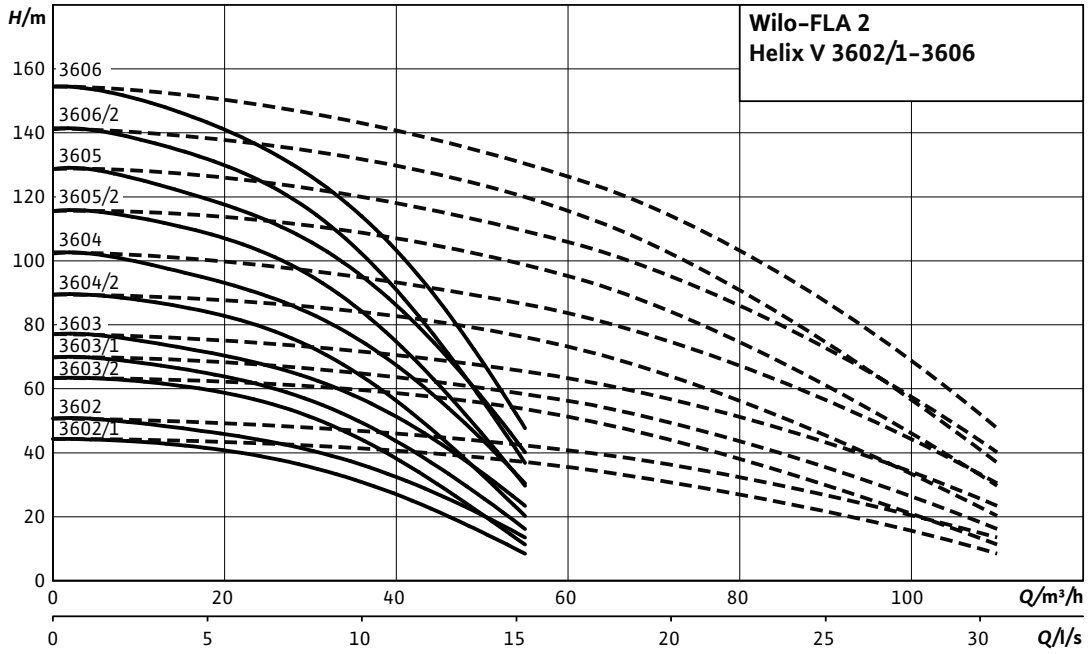

Motor data per pump					
Wilo FLA-2...	**Nominal motor power**	**Nominal current 3~400 V, 50 Hz**	**Motor efficiency**		
	P_2	I_N	$\eta_{m\ 50\%}$	$\eta_{m\ 75\%}$	$\eta_{m\ 100\%}$
	kW	A	%		
Helix V 3602/1 PN10	5.5	11.2	86.5	88.8	88.6
Helix V 3602 PN10	5.5	11.2	86.5	88.8	88.6
Helix V 3603/2 PN10	7.5	14.7	88.5	89.9	89.5
Helix V 3603/1 PN10	7.5	14.7	88.5	89.9	89.5
Helix V 3603 PN10	9	17.2	86.6	88.4	88.8
Helix V 3604/2 PN10	11	20.3	87.5	89.3	89.4
Helix V 3604 PN16	11	20.3	87.5	89.3	89.4
Helix V 3605/2 PN16	15	26.2	88.4	90.2	90.3
Helix V 3605 PN16	15	26.2	88.4	90.2	90.3
Helix V 3606/2 PN16	15	26.2	88.4	90.2	90.3
Helix V 3606 PN16	18.5	30	89.0	90.8	90.9

Motor efficiency based on 400 V, 50 Hz

Technical data Wilo-FLA-2

Dimension drawing

FLA-2 Helix V 3602/1 PN8 - 3606 PN16

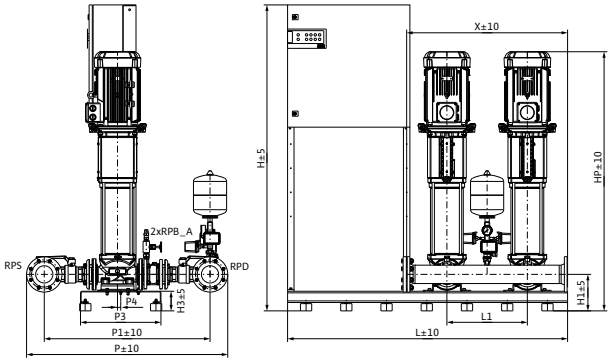

Dimensions, weights													
Wilo FLA-2...	**Nominal diameters of the pipe connections on suction side**	**Nominal diameters of pipe connections on the pressure side**	**Dimensions**										**Weight approx.**
	RPS	*RPD*	*H*	*H1*	*H3*	*HP*	*L*	*L1*	*P*	*P1*	*P3*	*P4*	*m*
			mm										kg
Helix V 3602/1 PN10	DN 100	DN 100	1905	230	125	1167	1740	500	1250	1030	500	20	466
Helix V 3602 PN10	DN 100	DN 100	1905	230	125	1167	1740	500	1250	1030	500	20	466
Helix V 3603/2 PN10	DN 100	DN 100	1905	230	125	1302	1740	500	1250	1030	500	20	486
Helix V 3603/1 PN10	DN 100	DN 100	1905	230	125	1302	1740	500	1250	1030	500	20	486
Helix V 3603 PN10	DN 100	DN 100	1905	230	125	1302	1740	500	1250	1030	500	20	486
Helix V 3604/2 PN10	DN 100	DN 100	1905	230	125	1479	1740	500	1250	1030	500	20	565
Helix V 3604 PN16	DN 100	DN 100	1905	230	125	1479	1740	500	1250	1030	500	20	565
Helix V 3605/2 PN16	DN 100	DN 100	1905	230	125	1546	1740	500	1250	1030	500	20	596
Helix V 3605 PN16	DN 100	DN 100	1905	230	125	1546	1740	500	1250	1030	500	20	596
Helix V 3606/2 PN16	DN 100	DN 100	1905	230	125	1613	1740	500	1250	1030	500	20	603
Helix V 3606 PN16	DN 100	DN 100	1905	230	125	1613	1740	500	1250	1030	500	20	628

Technical data Wilo-FLA-2

Pump curves

Wilo-FLA-2 Helix V 5202-5206/2

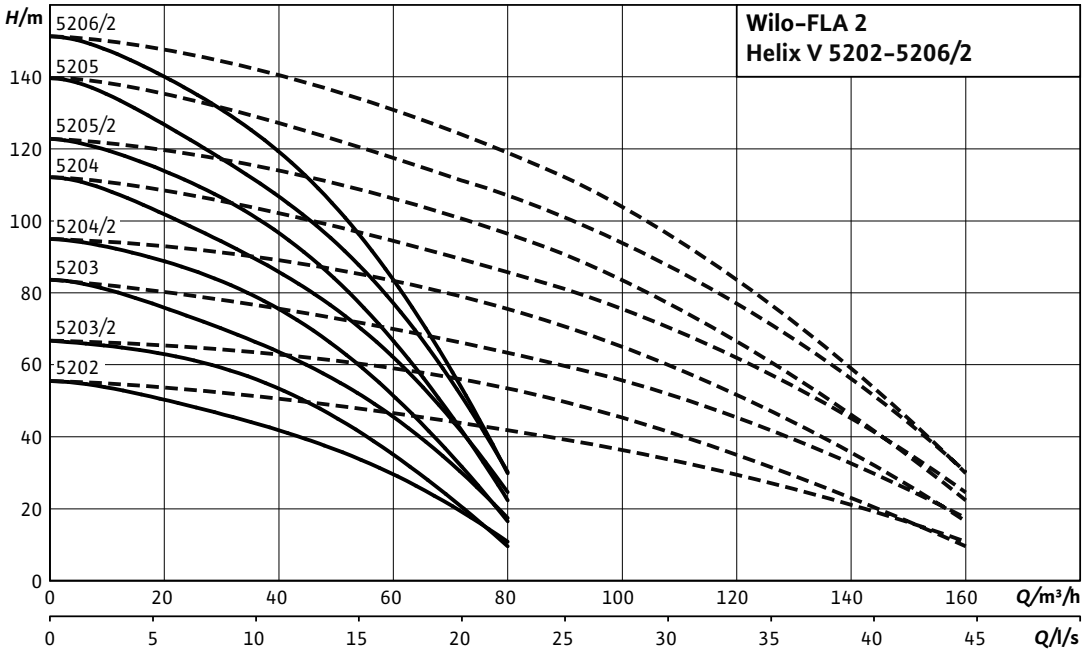

Motor data per pump					
Wilo FLA-2...	**Nominal motor power**	**Nominal current 3~400 V, 50 Hz**	**Motor efficiency**		
	P_2	I_N	$\eta_{m\ 50\%}$	$\eta_{m\ 75\%}$	$\eta_{m\ 100\%}$
	kW	A	%		
Helix V 5202 PN10	7.5	14.7	88.5	89.9	89.5
Helix V 5203/2 PN10	11	20.3	87.5	89.3	89.4
Helix V 5203 PN10	11	20.3	87.5	89.3	89.4
Helix V 5204/2 PN10	15	26.2	88.4	90.2	90.3
Helix V 5204 PN16	15	26.2	88.4	90.2	90.3
Helix V 5205/2 PN16	18.5	32	89.0	90.8	90.9
Helix V 5205 PN16	18.5	32	89.0	90.8	90.9
Helix V 5206/2 PN16	22	38	89.5	90.9	91.3

Motor efficiency based on 400 V, 50 Hz

Technical data Wilo-FLA-2

Dimension drawing

FLA-2 Helix V 5202 PN8 - 5206/2 PN16

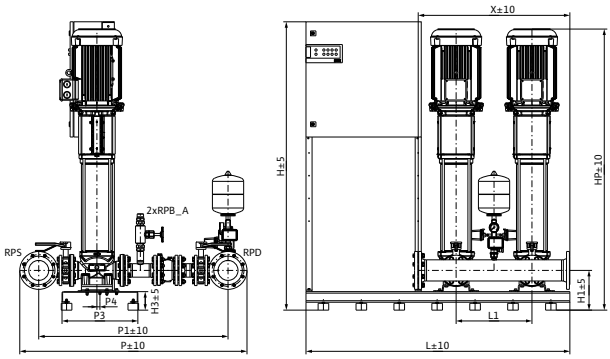

Dimensions, weights

Wilo FLA-2...	Nominal diameters of the pipe connections on suction side	Nominal diameters of pipe connections on the pressure side	Dimensions										Weight approx.
	RPS	*RPD*	*H*	*H1*	*H3*	*HP*	*L*	*L1*	*P*	*P1*	*P3*	*P4*	*m*
			mm										kg
Helix V 5202 PN10	DN 125	DN 125	1905	265	125	1269	1740	500	1498	1248	500	20	587
Helix V 5203/2 PN10	DN 125	DN 125	1905	265	125	1514	1740	500	1498	1248	500	20	670
Helix V 5203 PN10	DN 125	DN 125	1905	265	125	1514	1740	500	1498	1248	500	20	670
Helix V 5204/2 PN10	DN 125	DN 125	1905	265	125	1614	1740	500	1498	1248	500	20	706
Helix V 5204 PN16	DN 125	DN 125	1905	265	125	1614	1740	500	1498	1248	500	20	706
Helix V 5205/2 PN16	DN 125	DN 125	1905	265	125	1714	1740	500	1498	1248	500	20	740
Helix V 5205 PN16	DN 125	DN 125	1905	265	125	1714	1740	500	1498	1248	500	20	740
Helix V 5206/2 PN16	DN 125	DN 125	1905	265	125	1857	1740	500	1498	1248	500	20	799

Technical data Wilo-FLA-2

Pump curves

Wilo-FLA-2 MVI 7002/1-7606/1

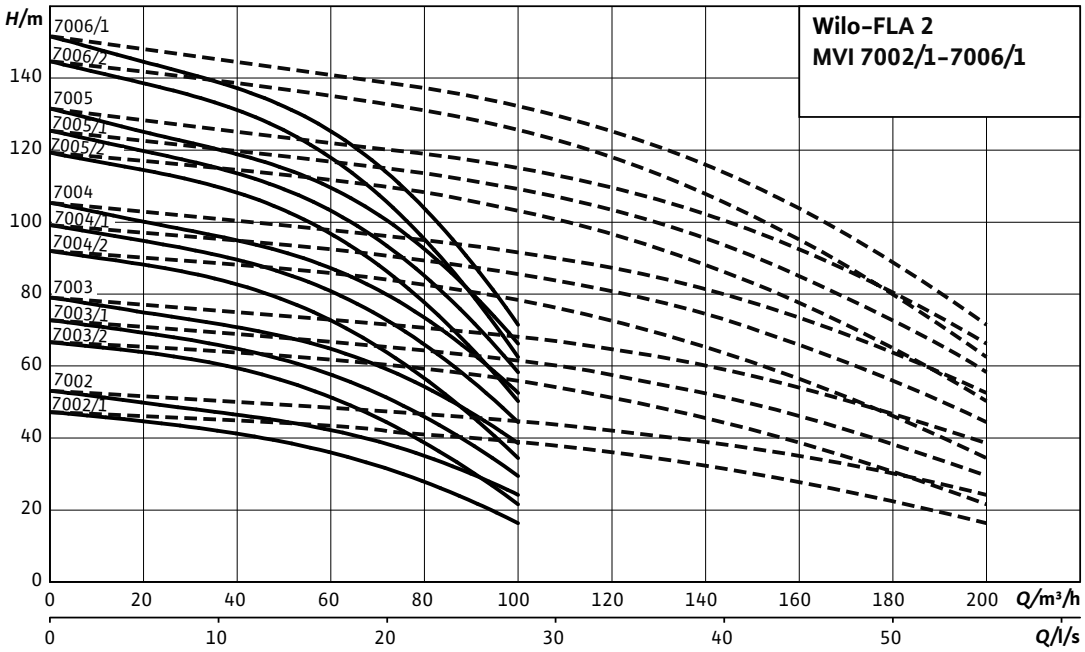

Motor data per pump					
Wilo FLA-2...	**Nominal motor power**	**Nominal current 3~400 V, 50 Hz**	**Motor efficiency**		
	P_2	I_N	$\eta_{m\ 50\%}$	$\eta_{m\ 75\%}$	$\eta_{m\ 100\%}$
	kW	A	%		
MVI 7002/1 PN10	9	17	86.6	88.4	88.8
MVI 7002 PN10	11	20	87.5	89.3	89.4
MVI 7003/2 PN10	15	26.5	88.4	90.2	90.3
MVI 7003/1 PN10	15	26.5	88.4	90.2	90.3
MVI 7003 PN10	18.5	32.2	89.0	90.8	90.9
MVI 7004/2 PN10	18.5	32.2	89.0	90.8	90.9
MVI 7004/1 PN16	22	38.1	89.5	90.9	91.3
MVI 7004 PN16	22	38.1	89.5	90.9	91.3
MVI 7005/2 PN16	30	53	90.3	91.8	92.0
MVI 7005/1 PN16	30	53	90.3	91.8	92.0
MVI 7005 PN16	30	53	90.3	91.8	92.0
MVI 7006/2 PN16	30	53	90.3	91.8	92.0
MVI 7006/1 PN16	37	64.5	90.1	91.9	92.5

Motor efficiency based on 400 V, 50 Hz

Technical data Wilo-FLA-2

Dimension drawing

FLA-2 MVI 7002/1 PN8 - 7004 PN16

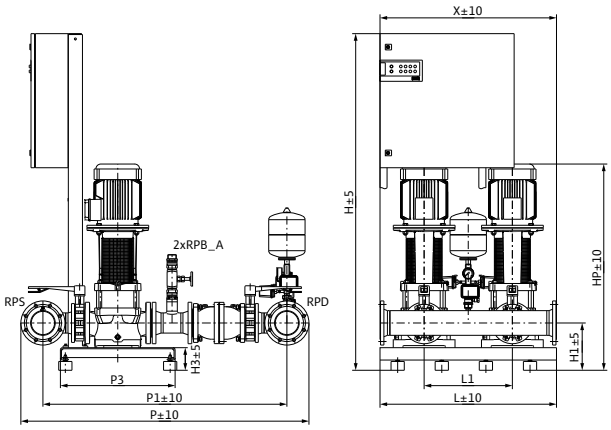

Dimension drawing

FLA-2 MVI 7005/2 PN16 - 7005 PN16

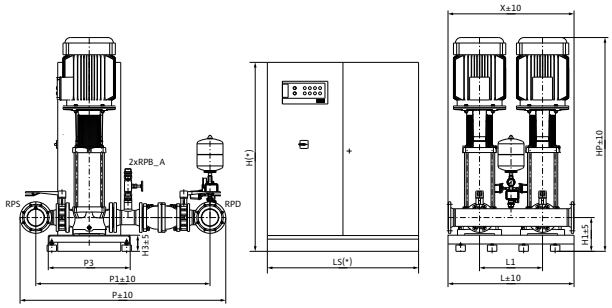

Dimension drawing

FLA-2 MVI 7006/2 PN16 - 7006/1 PN16

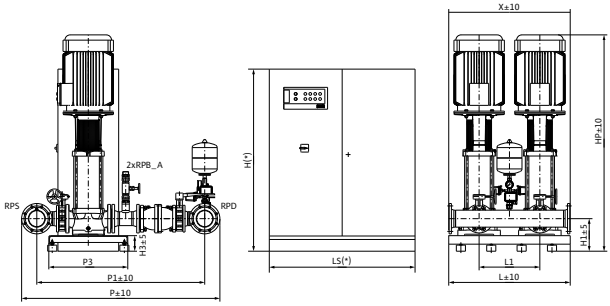

Dimensions, weights

Wilo FLA-2...	Nominal diameters of the pipe connections on suction side	Nominal diameters of pipe connections on the pressure side	Dimensions									Weight approx.
	RPS	*RPD*	*H*	*H1*	*H3*	*HP*	*L*	*L1*	*P*	*P1*	*P3*	*m*
			mm									kg
MVI 7002/1 PN10	DN 125	DN 125	1905	270	130	1169	1000	500	1614	1364	650	816
MVI 7002 PN10	DN 125	DN 125	1905	270	130	1169	1000	500	1614	1364	650	817
MVI 7003/2 PN10	DN 125	DN 125	1905	270	130	1448	1000	500	1614	1364	650	898
MVI 7003/1 PN10	DN 125	DN 125	1905	270	130	1448	1000	500	1614	1364	650	898
MVI 7003 PN10	DN 125	DN 125	1905	270	130	1448	1000	500	1614	1364	650	964
MVI 7004/2 PN10	DN 125	DN 125	1905	270	130	1533	1000	500	1614	1364	650	972
MVI 7004/1 PN16	DN 125	DN 125	1905	270	130	1576	1000	500	1614	1364	650	1047
MVI 7004 PN16	DN 125	DN 125	1905	270	130	1576	1000	500	1614	1364	650	1047
MVI 7005/2 PN16	DN 125	DN 125	1500	270	130	1697	1000	500	1614	1364	650	1278
MVI 7005/1 PN16	DN 125	DN 125	1500	270	130	1697	1000	500	1614	1364	650	1278
MVI 7005 PN16	DN 125	DN 125	1500	270	130	1697	1000	500	1614	1364	650	1278
MVI 7006/2 PN16	DN 125	DN 125	1500	270	130	1782	1000	500	1614	1364	650	1352
MVI 7006/1 PN16	DN 125	DN 125	1500	270	130	1782	1000	500	1614	1364	650	1403

Series description Wilo-EMU sprinkler pumps D..., K... and KM...

Design
Sprinkler pump with sectional construction

Type key

Example:	**Wilo-EMU KM 1300S-2a + NU 801-2/60**
Hydraulics:	**KM 1300S-2a**
KM1300	Basic hydraulics
S	Trimmed impeller
2	Number of hydraulic stages
A	Defined impeller diameter
Motor:	**NU 801-2/60**
NU	Submersible motor (NU..., U...)
801	Size (6... = 6"; 8... = 8"; 9... = 10"; 12... = 12"; 15... = 16")
2	Number of poles
60	Package length (cm)

Application
- For pumping water to supply sprinkler systems
- For pumping water without long-fibre and abrasive constituents

Special features/product advantages
- VdS certification
- Certified non-return valve available as accessory
- Cast material version (also available in bronze)
- Pressure shroud installation possible
- Vertical and horizontal installation possible (depending on the number of stages)

Technical data
- Mains connection: 3~400 V/50 Hz
- Immersed operating mode: S1
- Max. fluid temperature: 25 °C
- Max. sand content: 35 g/m^3
- Max. number of starts: 10/h
- Max. immersion depth: 300 m
- Protection class: IP 68

Equipment/function
- Multistage submersible-motor pump with semi-axial impellers
- NEMA coupling (depending on type)
- Three-phase motor for direct or star-delta starting
- Rewindable motors

Description/design
Sprinkler pump for vertical or horizontal installation in tanks for supplying sprinkler systems.

Hydraulics
Multistage submersible-motor pump with semi-axial hydraulics. Housing parts made of EN-GJL with 2K coating or G-CuSn10, impellers made of G-CuSn10. Stage housing with stationary wear rings made of special bronze. Pressure connection as flange connection.

Motor
Three-phase motor with rewindable PVC-insulated winding for direct and star-delta starting. Motor shroud made of A2/A4-quality stainless steel or steel/G-CuSn10. Pump connection up to 8" overall size as NEMA connection, as standardised connection from 10" and larger. Sealing of motor shaft by the use of a mechanical seal made of solid silicon carbide material.

Thrust bearing with rockers for absorption of high axial thrust. Negative axial thrust is absorbed by the counter-thrust bearing. Self-lubricating bearing. NU... series motors are filled with water-glycol mixture as standard. Alternatively, they can be filled with potable water (T version). U... series motors generally have to be filled with potable water.

Cooling
The motor is cooled by the fluid. The motor must always be operated in submerged state. The limit values for the max. fluid temperature must not be exceeded. Vertical installation is possible optionally with or without cooling jacket. For horizontal installation, bearing brackets must be used for reinforcement of the unit. An anti-vortex plate or cooling jacket may be used to improve the inlet flow.

Pressure shroud
The pressure shroud is used for the direct installation of the unit in the pipe system. Standard models are without mounted non-return valves. The maximum inlet pressure is 10 bar or 5 bar on D 500 unit.

Options
- Standard versions available from stock with 25 m cable (ready for delivery indicated by "L")

Series description Wilo-EMU sprinkler pumps D..., K... and KM...

Scope of delivery
- Hydraulics + motor fully mounted
- Connecting cable in accordance with VDE/KTW, cable cross-section and length per customer request
- Installation and operating instructions

Configuration
It is important to observe VdS regulation VdS CEA 4001:2005-09 when installing sprinkler pumps. Please contact VdS for details.

Accessories
- Pressure shroud
- Bearing brackets and anti-vortex plate
- Non-return valve (certified, depending on type)

Note
Most of these units are configured products. In some cases, however, standard versions can be delivered directly from stock. For more details about delivery times, please see the LB column in the ordering information tables:
- L = in-stock items; available from stock in specified standard configuration
- A = delivery time on request; configured product per customer request

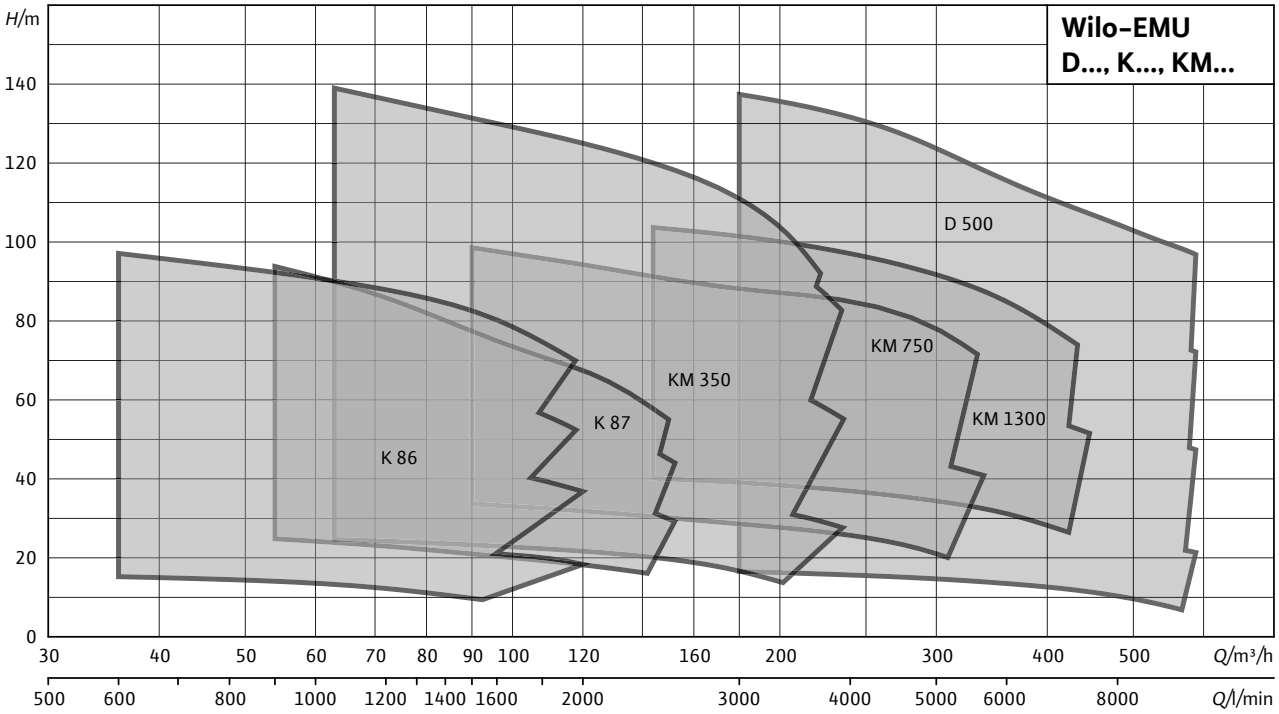

Sprinkler systems

Sprinkler systems are automatic fire extinguishing systems which are used for fire prevention in special building structures such as skyscrapers, commercial buildings, department stores, industrial installations, places of public assembly and underground car parks.

The sprinkler head was invented in 1874 by the American Henry S. Parmalee, a piano manufacturer. The water spraying nozzles were originally sealed with a small metal plate which was held in place by a device connected to a solder. The solder melts with a corresponding rise in temperature and the retaining device releases the small metal plate, which is in turn expelled by the pressure of the water behind it, which then starts spraying.

Several sprinkler heads that are connected to a water pipe system are fitted on the ceiling of the room or on the upper part of the side walls. The sprinkler heads are in turn sealed with glass ampoules that are filled with a special dyed fluid. A constant water pressure prevails inside a sprinkler system that is monitored at the central sprinkler control point. In the event of a fire, the special fluid in the glass ampoules heats up and expands, causing the ampoules to burst. This opens the nozzles and water is released from the sprinkler pipe network. The colour of the special fluid indicates the triggering temperature. This triggering temperature is on average approximately 30 °C above the anticipated room temperature.

The resulting drop in pressure is detected, which leads to the opening of special valves and the starting of our sprinkler pumps. Water is immediately pumped at high pressure out of the tanks provided for this or from a water connection designed for that purpose and into the sprinkler system. The water is expelled from all open water nozzles and extinguishes or minimises the fire.

The dimensions of the pipework and of the water supply are designed in such a way that only enough water for a specific number of water nozzles is available, which is called the effective surface. If more sprinkler heads open than are available on the effective surface, then the amount of water available per sprinkler head drops and the effectiveness of the systems is reduced.

Sprinkler systems are therefore primarily for fighting a fire in its initial stages (incipient fire) and not for fighting a blazing fire. A fireproof partition must be erected between areas that lack a sprinkler system and ones that have one in order to ensure that a blazing fire originating in an unprotected area is not able to cross over into an area of the building that is protected with a sprinkler system.

What are called dry pipe systems are used in areas where there is a risk of frost causing the sprinkler lines to freeze up. The pipe system in these installations is filled with compressed air. The installation is not filled with water until a sprinkler head is triggered.

As is the case with conventional fire detectors, sprinkler control points are generally connected to fire detection systems and trigger a fire alarm when a drop in pressure has been detected. Depending on the programming, this is transmitted to the police, fire department, factory security office or other offices providing aid.

As a rule, the configuration of sprinkler systems in Germany is in accordance with the VdS Regulation CEA 4001 (VdS Damage Prevention, CEA Comité Européen des Assurances). The American Standard of the NFPA (National Fire Protection Association) – also known in modified or further developed form of the directives as FM (Factory Mutual) Standard – is however increasingly enjoying the favour of international building companies and is as a rule also accepted in the meantime by German government authorisation agencies. The system is configured according to the fire hazard level in the area to be protected by determining the water saturation of the fire source between 2.25 mm/min and 30 mm/min (1 mm/min is equivalent to 1 $l/m^2/min$), the effective time between 30 and 90 min and of the distance between the sprinkler heads.

Verband der Sachversicherer e.V. (VdS) – (German association of property insurers)

Formation

The German insurance industry recognised at an early stage that it is absolutely essential to make risks controllable and insurable in active damage prevention. Already around 100 years ago, they founded the "Sprinkler monitoring agency". During the Third Reich, the association of private fire insurers and the association of public fire insurers were closed. Nevertheless, the sprinkler monitoring agency could continue their work to a large extent up until 1944. After an interruption due to the war, in 1947 it was possible to resume work. In June 1948, the inspection authority was integrated into the newly founded Verband der Sachversicherer e.V. (VdS) (German association of property insurers).

In the following years, the technical VdS departments for fire protection and housebreaking/theft protection were continuously expanded. The fusion of the three German insurance associations: Verband der Sachversicherer e.V., HUK-Verband and Deutscher Transportversicherungsverband to form the Verband der Schadenversicherer e.V. (VDS) in 1995 was only an temporary solution before fusion with the Verband der Lebensversicherer and the Gesamtverband der Deutschen Versichersicherungswirtschaft e.V. (GDV) in 1996. The technical departments of the former association were transformed to the VdS Schadenverhütung GmbH on 1997, whose sole shareholder is GDV.

Today, the VdS Schadenverhütung GmbH – or VdS for short – is a modern company, trusted by all groups involved with safety – insurers, manufacturers, service providers, authorities and consumers. The expertise of VdS is documented by numerous accreditations/notifications.

The fire protection department

The fire protection department is an institution that is recognised worldwide. VdS employees are highly qualified experts who work as accident prevention professionals. VdS has been dedicated to fire protection for nearly one hundred years.

This expert knowledge flows into the development of conclusive overall fire protection and safety technology designs. The safety standard defined together with the customer, which is therefore to be aimed at, results in individual protection at the highest level. In a nutshell, the VdS pursues the following objectives: Personal injuries are prevented, and physical damage and financial losses, including downtimes due to failures and possibly the loss of image which results from this, are minimised.

By participating in national and international regulatory committees, but also by means of their own developed guidelines, etc. in the area of fire extinguishing, fire alarm and smoke extraction systems, VdS has a major influence on fire protection and safety technology worldwide. VdS thus has an international knowledge potential at its disposal which can be used for a wide range of applications.

VdS CEA guidelines for sprinkler systems: Planning and installation

These guidelines contain the requirements and provide recommendations for planning, installation and maintenance of stationary sprinkler systems in buildings and industrial plants. They also define special requirements for sprinkler systems, which are essential for personal protection measures. The requirements and recommendations of these guidelines also apply to every addition, extension, repair, maintenance action or other change to the sprinkler system. These guidelines include the classification of dangers, the type of water supply, the components to be used, the installation and testing of the system, as well as the maintenance and extension of existing systems. Demands are placed on the building and partitions, which are required for sprinkler systems to work properly in accordance with these guidelines.

Source: VdS

Installation of sprinkler pumps

General notes

The purpose of the pumps is to deliver the required flow rates and pressures for the sprinkler systems and nozzles. The pumps may not be used for any other purpose than for fighting fires.

The pressure on the pump pressure side must drop continuously with increasing flow rate, i.e. the pump must have a stable pump curve.

The used electric motors must be able to provide sufficient power for all pump loading conditions from a zero flow rate to the end of the pump curve. The end of the pump curve (Qz/Hz), measured at the pump pressure side, is equivalent to 0.83 times the value which is reached at an NPSH value of 9.5 m.

The pump may not be used as a fixed point for the pipes. The pressure/ascending pipe is to be supported directly after the pump – when installed as a pressure shroud pump directly upstream and downstream of the pump – and connected stress-free. The installation instructions are to be observed in particular for compensators.

Arrangements with several pumps

If more than one pump is to be installed for a single water supply source with increased reliability or a double water supply, these pumps must be driven by different power sources.

In all cases, the pumps must have pump curves which are adjusted to each other and must be able to pump simultaneously at all flow rates. If two pumps are installed, every single one must be able to deliver the required flow rate and the required pressure. If three pumps are installed, each pump must be able to deliver at least 50 % of the pumped flow rate and the required pressure.

In the case of several water sources, the sprinkler pumps must be able to be supplied from each individual water tank as desired if they are not separated from one another. In the case of pressure shroud operation, the temperature in the pump compartment must be maintained at a minimum of +4 °C.

Maximum temperature and composition of the pumped fluid

The water temperature of the water supply may not exceed 40 °C. If submersible pumps are used, the water temperature may not exceed 25 °C unless it can be verified that the motor is suitable for temperatures up to 40 °C. The water must be free of fibrous or other suspended matter which could result in the pipes becoming clogged. Salt or brackish water may not constantly be in the sprinkler lines.

Valves and accessories

Check valves are to be installed in the pump lines and a non-return valve in the pressure pipe of the pumps. Water must continuously flow through the pump which ensures that overheating is prevented during operation against closed check valves. If the water is fed back into the tank and if the flow rate is not more than 2 % of the approved flow rate, the flow volume does not have to be taken into account in the hydraulic calculation.

Pumping conditions

General information

The submersible pump must always be covered by water, or the water must be able to flow freely to the pump. Even when using it as a pressure shroud pump, the water must have the appropriate primary pressure.

Installation conditions

The submersible pump is to be placed in the tank according to the figure. The conditions in accordance with Fig. 8.02 in the planning and installation documentation of the VdS [VdS CEA 001:2005-09 (02)] apply to supply lines for dry-installed pressure shroud pumps.

Source: VdS CEA 4001:2005-09 (02) Sprinkler systems, planning and installation

Note: This text is an excerpt from the VdS guideline VdS CEA 4001:2005-09. We would like to thank VdS for being able to publish this part of the guideline. Further information about planning and installing sprinkler pumps can be found in the guideline. It is available from VdS.

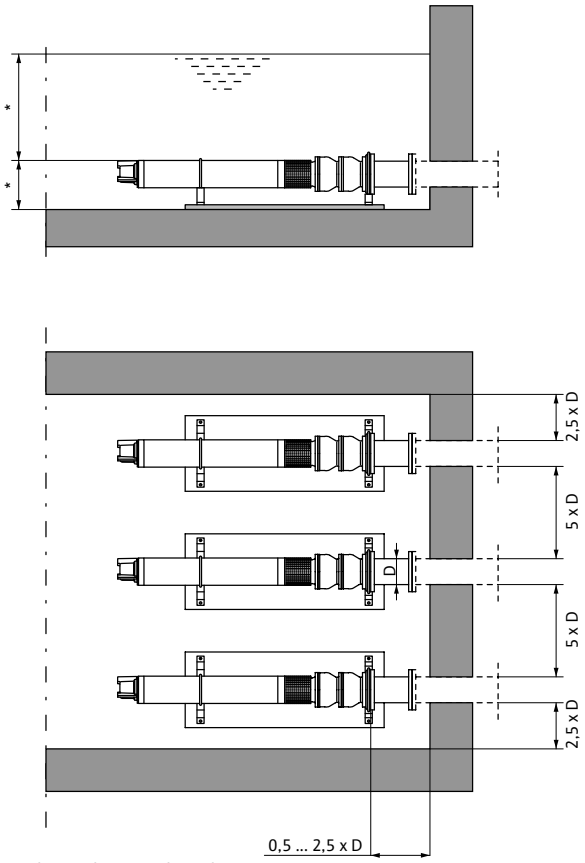

* depending on the relevant pump type

Non-return valves (certified)

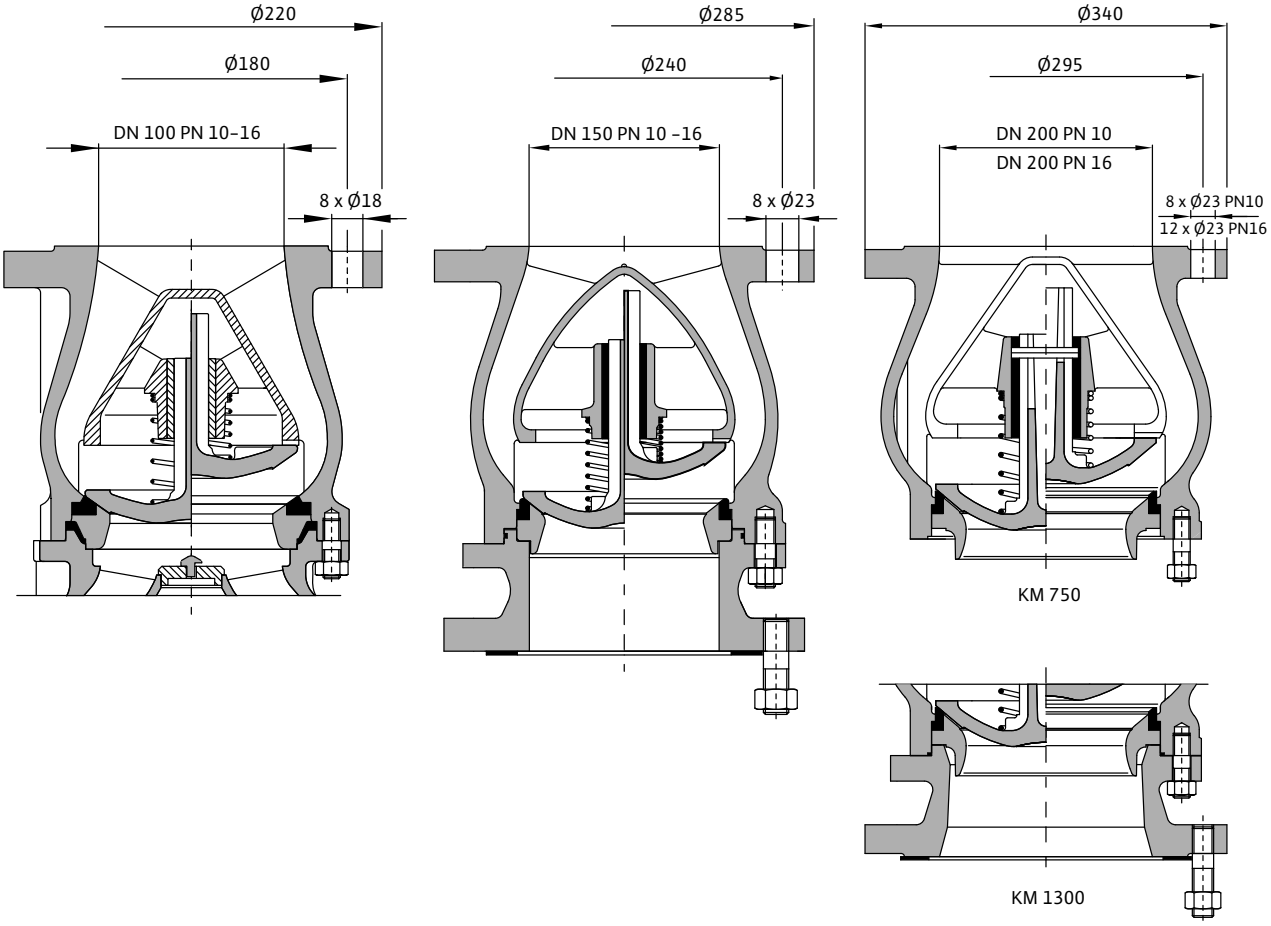

Dimensions, weights

Wilo-EMU...	Length	Weight	Volume flow at 5 m/s	Pressure losses	Friction coefficient	Equivalent pipe length (steel)
			Q		ζ	
	mm	kg	l/min	m		m
K 86...	70	5.3	2370	2.05 (DN 100. 5 m/s)	1,61 (DN 100. 5 m/s)	10 (114x3.2)
K 87...	70	5.3	2370	2.05 (DN 100. 5 m/s)	1,61 (DN 100. 5 m/s)	10 (114x3.2)
KM 350...	320	50.2	5310	2.21 (DN 150. 5 m/s)	1,74 (DN 150. 5 m/s)	16.9 (168.3x4.0)
KM 750...	225	43.3	9420	1.55 (DN 200. 5 m/s)	1,22 (DN 200. 5 m/s)	15.6 (219.1x4.5)
KM 1300...	370	85.6	9420	1.55 (DN 200. 5 m/s)	1,22 (DN 200.5 m/s)	15.6 (219.1x4.5)
D 500...	–	–	–	–	–	–

The pressure losses of the non-return valves are not included in the individual pump curves. They are to be taken into account in the system curve. Final testing at the factory is performed without the non-return valve attached.

Non-return valves (certified)

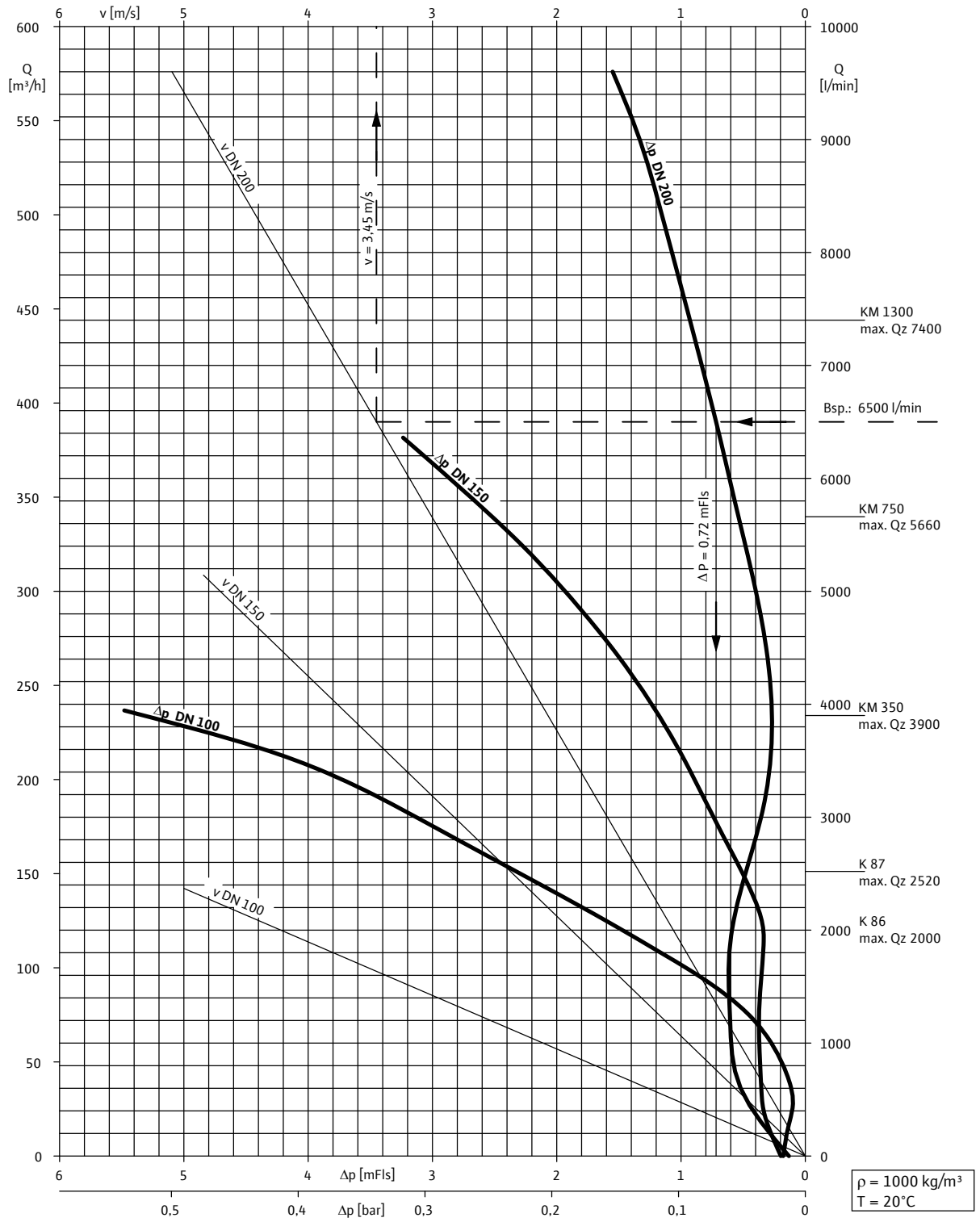

Submersion in water

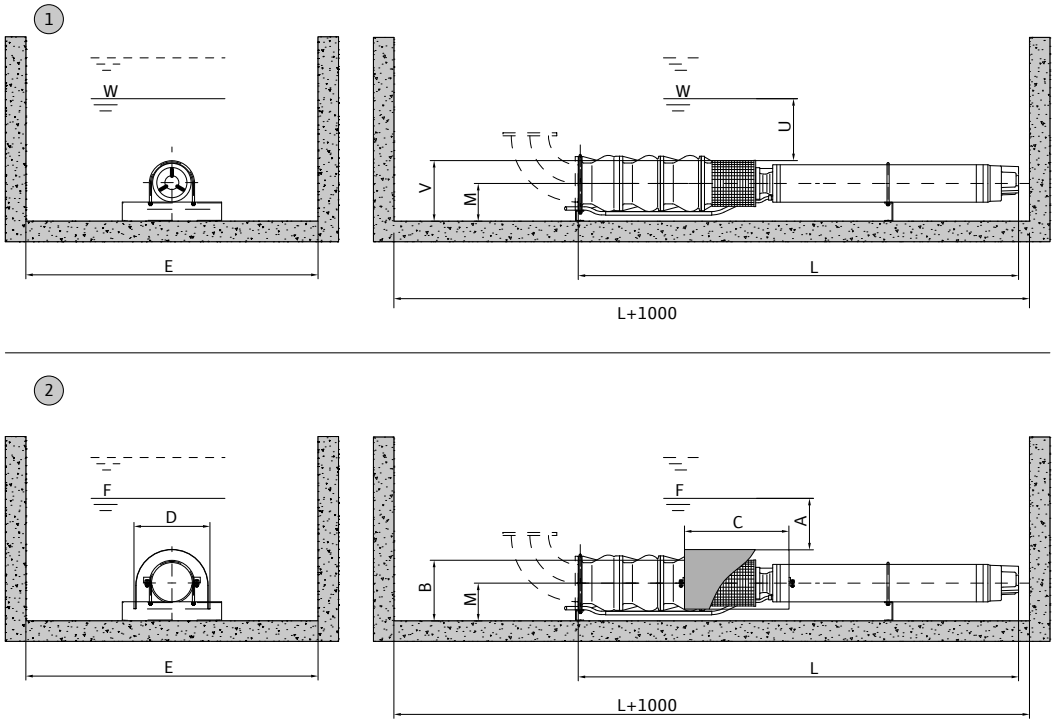

1. – Minimum water submersion without anti-vortex plate
2. – Minimum water submersion with anti-vortex plate

Dimensions, weights

Wilo-EMU...	Type of motor	Dimensions									
		A	*B*	*C*	*D*	*E*	*F*	*M*	*U*	*V*	*W*
		mm									
K 86...	NU 611	150	325	300	370	1000	475	175	400	265	665
	NU 801	150	350	400	416	1000	500	175	400	265	665
K 87...	NU 611	390	325	300	370	1000	715	175	650	265	915
	NU 801	390	350	400	416	1000	740	175	650	265	915
KM 350...	NU 801	490	410	500	416	1200	900	230	800	345	1145
	NU 911	490	410	600	416	1200	900	230	800	345	1145
KM 750...	NU 801	560	450	500	436	1200	1010	259	900	375	1275
	NU 911	560	450	600	436	1200	1010	259	900	375	1275
KM 1300...	NU 801	560	480	600	572	1500	1040	259	1250	395	1645
	NU 911	560	480	800	572	1500	1040	259	1250	395	1645
D 500...	NU 121	1100	545	1000	620	1600	1645	277.5	1300	445	1745
	NU 160	1100	560	1000	620	1600	1660	277.5	1300	445	1745
	NU 801	1100	545	700	620	1600	1645	277.5	1300	445	1745
	NU 911	1100	545	1000	620	1600	1645	277.5	1300	445	1745

The minimum water level depends on the tank design and on the incoming water!
"L" is the length of the unit. See corresponding dimension drawing.

Fire fighting

Sprinkler pumps with VdS approval

Equipment/function

	K 86...	K 87...	KM 350...	KM 750...	KM 1300...	D 500...
Design						
Submersible	•	•	•	•	•	•
NEMA connection	•	•	•	•	•	•
Standardised connection	–	–	•	•	•	•
Integrated non-return valve	–	–	–	–	–	–
Without non-return valve	•	•	•	•	•	•
Single-phase AC motor	–	–	–	–	–	–
Three-phase motor	•	•	•	•	•	•
Direct activation	•	•	•	•	•	•
Star-delta activation	•	•	•	•	•	•
FC operation	–	–	–	–	–	–
Motor with cast stator	–	–	–	–	–	–
Rewindable motor	•	•	•	•	•	•
Oil motor filling	–	–	–	–	–	–
Water-glycol motor filling	•	•	•	•	•	•
Potable water motor filling	optional	optional	optional	optional	optional	optional
Hydraulics/motor preassembled	•	•	•	•	•	•
Application						
Horizontal installation	•	•	•	•	•	•
Vertical installation	•	•	•	•	•	•
Equipment/function						
Motor temperature monitoring, PT100	–	–	–	–	–	–
Motor temperature monitoring, PTC	–	–	–	–	–	–
Dry-running protection system	–	–	–	–	–	–
Accessories						
Bearing brackets for horizontal installation	optional	optional	optional	optional	optional	optional
Cooling jacket	optional	optional	optional	optional	optional	optional
Non-return valve	optional	optional	optional	optional	optional	optional
Pressure shroud	optional	optional	optional	optional	optional	optional

Technical data

Motor data

	Mains connection	Fluid temperature	Operating mode (immersed)	Protection class	Max. immersion depth	Max. switching frequency	Permitted voltage tolerance
		T					
		°C			m	1/h	%
NU 611...	3~400 V, 50 Hz	+3...+25	S1	IP 68	100	20	±10
NU 801...	3~400 V, 50 Hz	+3...+25	S1	IP 68	300	10	±10
NU 911...	3~400 V, 50 Hz	+3...+25	S1	IP 68	300	10	±10
NU 12...	3~400 V, 50 Hz	+3...+25	S1	IP 68	300	10	±10
NU 160...	3~400 V, 50 Hz	+3...+25	S1	IP 68	300	5	±10

Motor materials

	Motor shaft	Motor shaft (special version)	Motor housing	Motor housing (special version)	Motor shroud	Motor shroud (special version)	Screwed connection, motor	Screwed connection, motor (special version)
NU 611...	1.4301	1.4462	1.4301	1.4571	1.4306	1.4541	A2	A4
NU 801...	1.4021	1.4462	EN-GJL	G-CuSn10	1.4301	1.4571	A2	A4
NU 911...	1.4057	1.4462	EN-GJL	G-CuSn10	1.4301	1.4571	A2	A4
NU 12...	1.4462	1.4462	EN-GJL	G-CuSn10	1.0308	G-CuSn10	A2	A4
NU 160...	1.4057	1.4462	EN-GJL	G-CuSn10	1.0553	G-CuSn10	A2	A4

Material, hydraulics

Wilo-EMU...	Impeller	Impeller (special version)	Pump shaft	Pump shaft (special version)	Pump housing	Pump housing (special version)	Screwed connection, pump	Screwed connection, pump (special version)
K 86...	G-CuSn10	G-CuSn10	1.4021	1.4122	EN-GJL	G-CuSn10	A2	A2
K 87...	G-CuSn10	G-CuSn10	1.4021	1.4122	EN-GJL	G-CuSn10	A2	A2
KM 350...	NiAl-Bz	NiAl-Bz	1.4021	1.4122	EN-GJL	G-CuSn10	A2	A2
KM 750...	NiAl-Bz	NiAl-Bz	1.4021	1.4122	EN-GJL	G-CuSn10	A2	A2
KM 1300...	G-CuSn10	–	1.4021	–	EN-GJL	–	A2	–
D 500...	NiAl-Bz	NiAl-Bz	1.4021	1.4122	EN-GJL	G-CuSn10	A2	A2

Certification and emergency operation properties

Wilo-EMU...	Sprinkler approval for				Running time	Emergency flow rate without pressure shroud	Emergency flow rate with pressure shroud
	Germany (VdS)	*Czech Republic*	*Slovakia*	*Hungary*			
					h	%	
K 86...	P 4840420	c.216/C5A/2007/0002	SK03-ZSV-0370	618/4-9/2006	max. 48	min. 2	min. 4
K 87...	P 4840421	c.216/C5A/2007/0002	SK03-ZSV-0370	618/4-10/2006	max. 48	min. 2	min. 4
KM 350...	P 4840422	c.216/C5A/2007/0003	SK03-ZSV-0370	618/4-21/2006	max. 48	min. 2	min. 4
KM 750...	P 4840423	c.216/C5A/2007/0003	SK03-ZSV-0370	618/4-17/2006	max. 48	min. 2	min. 4
KM 1300...	P 4840424	c.216/C5A/2007/0003	SK03-ZSV-0370	618/4-19/2006	max. 48	min. 2	min. 4
D 500...	P 4080003	–	–	–	max. 48	min. 2	min. 4

Overview pump curve Wilo-EMU K 86

Overview pump curve Wilo-EMU K 86

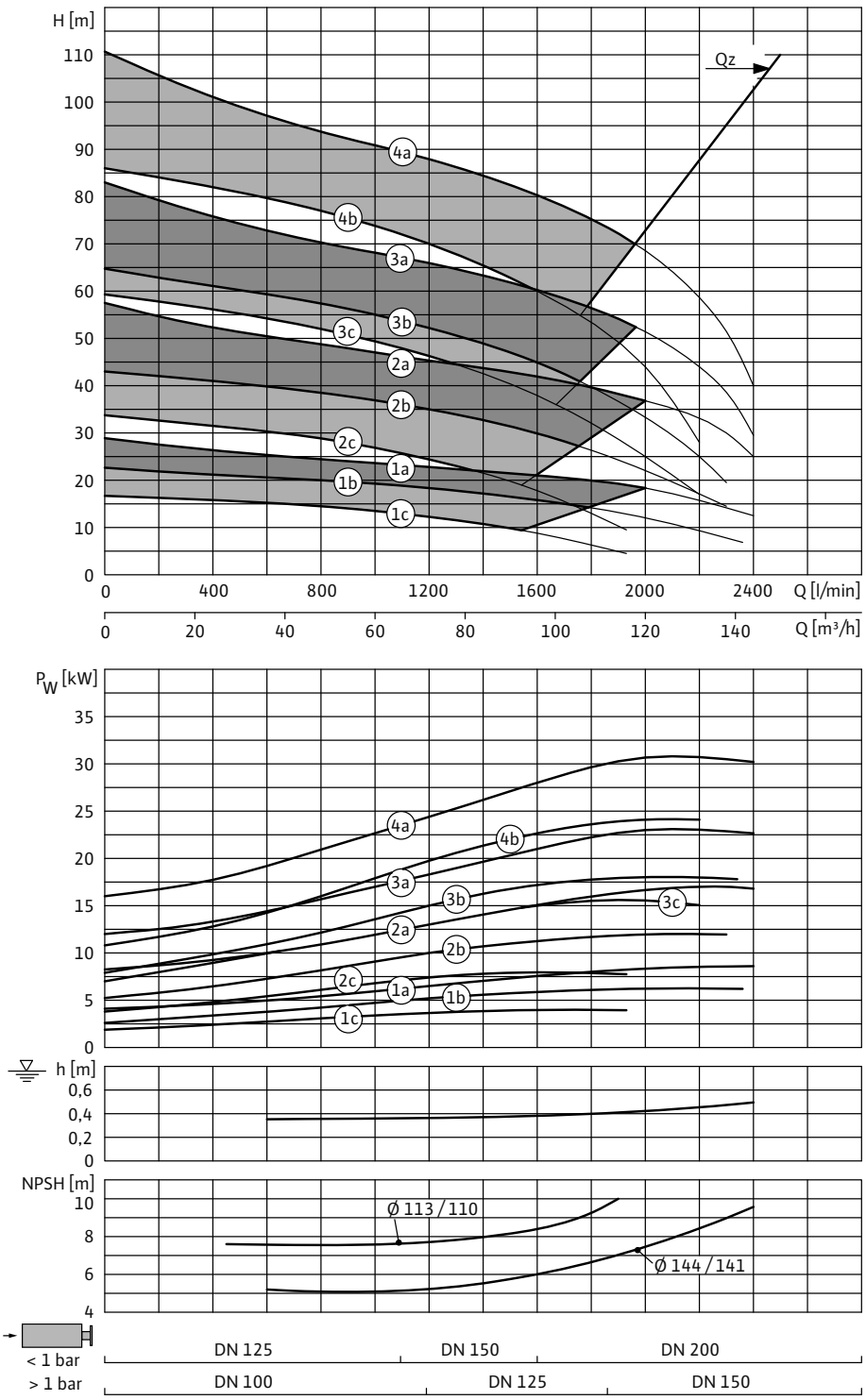

4a = K 86S-4a + NU 801-2/45
4b = K 86S-4b + NU 801-2/40

3a = K 86S-3a + NU 801-2/35
3b = K 86S-3b + NU 801-2/28
3c = K 86S-3c + NU 611-2/18

2a = K 86-2a + NU 611-2/18
2b = K 86S-2b + NU 611-2/15
2c = K 86S-2c + NU 611-2/11

1a = K 86-1a + NU 611-2/11
1b = K 86S-1b + NU 611-2/7
1c = K 86S-1c + NU 611-2/5

3~400 V, 50 Hz, p = 1 kg/dm^3, v = 1x10^{-6} m^2/s, ISO 9906 Annex A

Pump curves, motor data Wilo-EMU K 86-1

Pump curves Wilo-EMU K 86-1

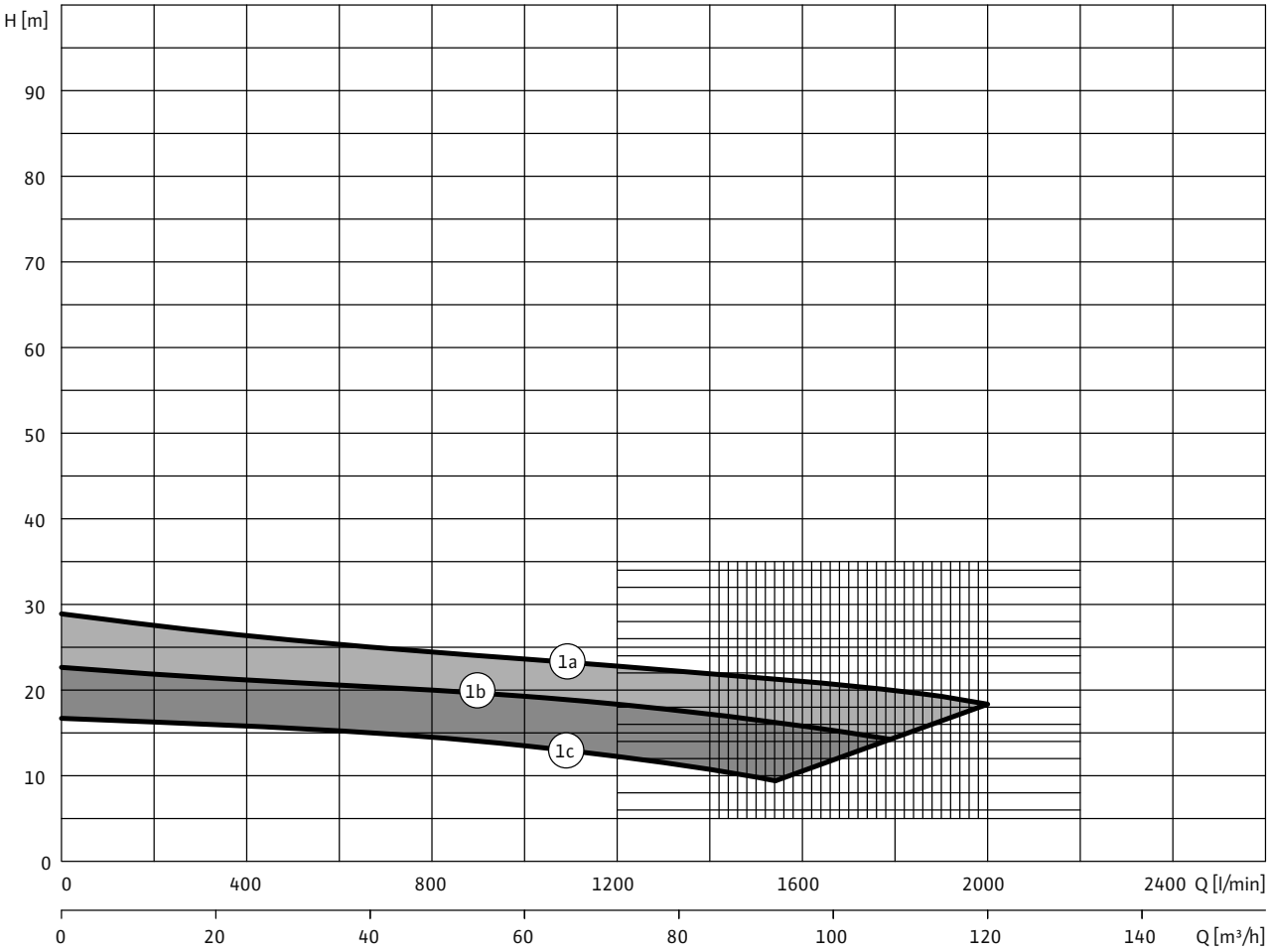

3~400 V, 50 Hz, p = 1 kg/dm^3, v = 1x10^{-6} m^2/s, ISO 9906 Annex A, η = pump efficiency

Motor data

Wilo-EMU...	Type of motor	Nominal motor power	Nominal current	Starting current - direct	Starting current - star-delta	Installation	Material code	
		P_2	I_N	I_A			A	C
		kW	A					
K 86-1a	NU 611-2/11	9	20.5	121	40.5	V+H	•	•
K 86S-1b	NU 611-2/7	7.5	16.8	82	27.5	V+H	•	•
K 86S-1c	NU 611-2/5	5	11.7	57	19	V+H	•	•

For star/delta starting, max. current peak during the switching phase; after reducing the compensatory processes and a switching phase of 80 ms. Please request a starting diagram when configuring power generators!

Pump curves, motor data Wilo-EMU K 86-2

Pump curves Wilo-EMU K 86-2

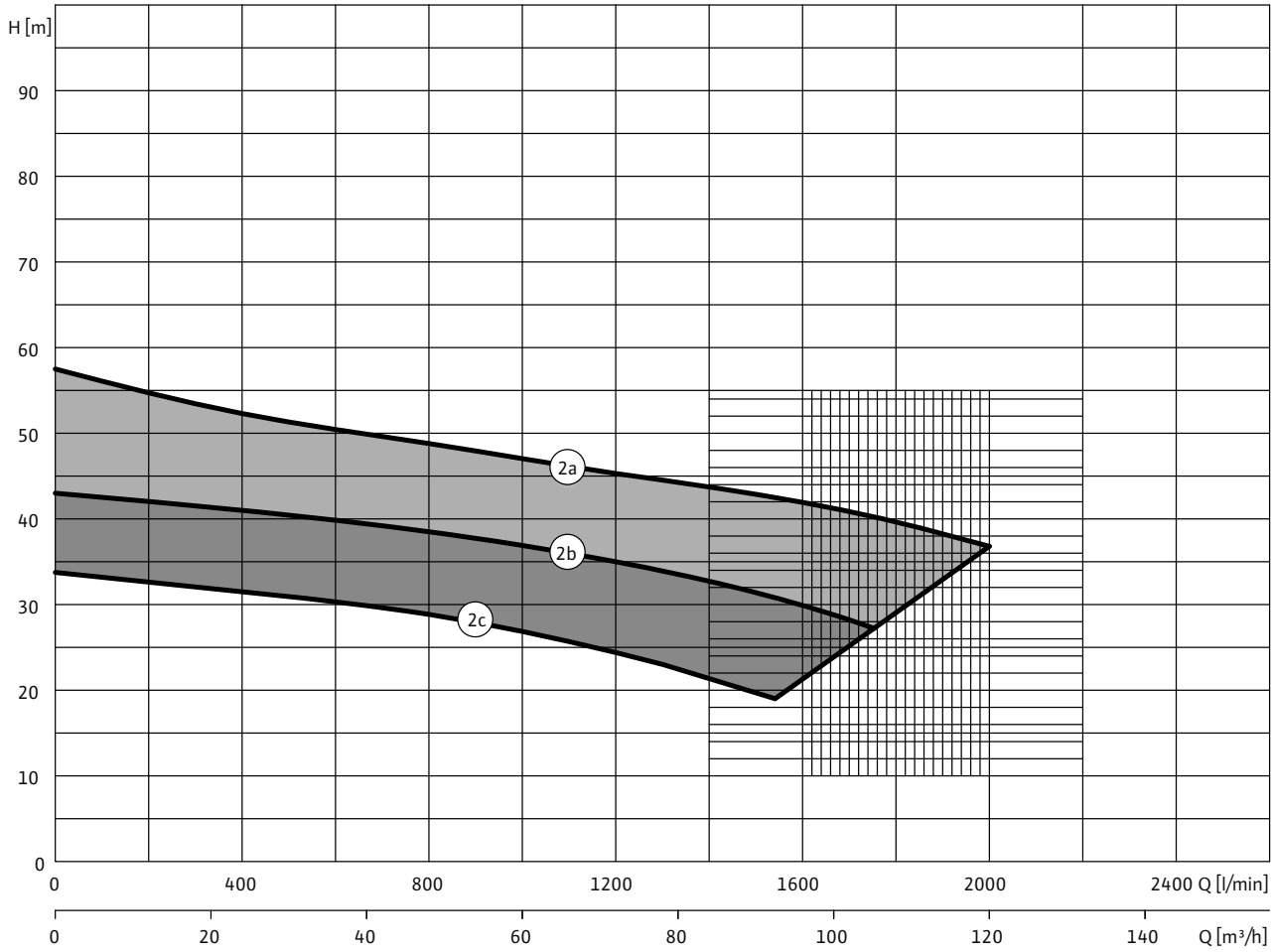

3~400 V, 50 Hz, p = 1 kg/dm^3, v = 1x10^{-6} m^2/s, ISO 9906 Annex A, η = pump efficiency

Motor data

Wilo-EMU...	Type of motor	Nominal motor power	Nominal current	Starting current - direct	Starting current - star-delta	Installation	Material code	
		P_2	I_N	I_A			A	C
		kW	A					
K 86-2a	NU 611-2/18	18	39	205	69	V+H	•	•
K 86S-2b	NU 611-2/15	14	30.5	160	54	V+H	•	•
K 86S-2c	NU 611-2/11	10	22	121	40.5	V+H	•	•

For star/delta starting, max. current peak during the switching phase; after reducing the compensatory processes and a switching phase of 80 ms. Please request a starting diagram when configuring power generators!

Pump curves, motor data Wilo-EMU K 86-3

Pump curves Wilo-EMU K 86-3

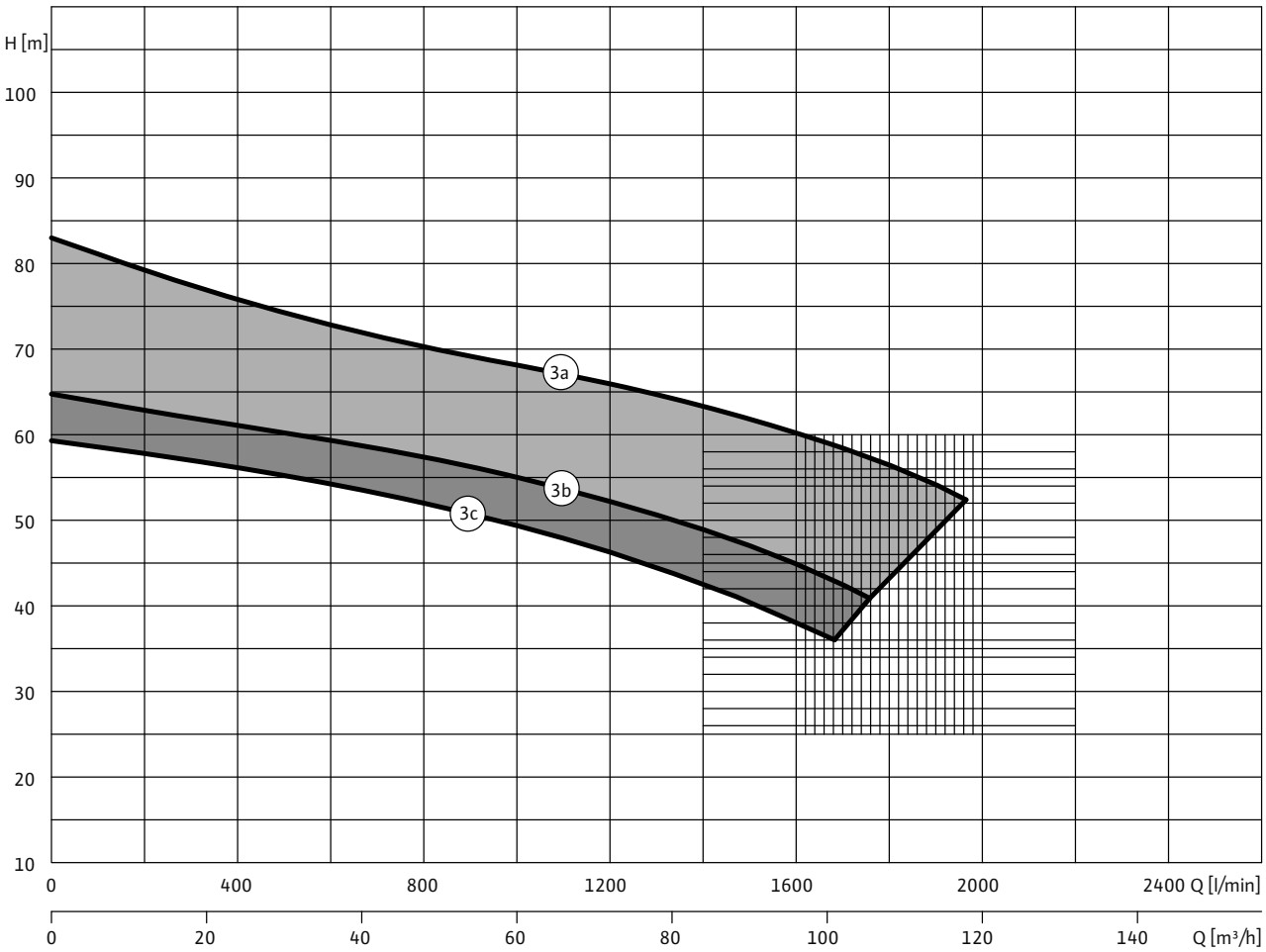

3~400 V, 50 Hz, p = 1 kg/dm^3, v = 1x10^{-6} m^2/s, ISO 9906 Annex A, η = pump efficiency

Motor data

Wilo-EMU...	Type of motor	Nominal motor power	Nominal current	Starting current - direct	Starting current - star-delta	Installation	Material code	
		P_2	I_N	I_A			A	C
		kW	A					
K 86S-3a	NU 801-2/35	26	52	270	90	V+H	•	•
K 86S-3b	NU 801-2/28	21	42.5	186	62	V+H	•	•
K 86S-3c	NU 611-2/18	18	39	205	69	V+H	•	•

For star/delta starting, max. current peak during the switching phase; after reducing the compensatory processes and a switching phase of 80 ms. Please request a starting diagram when configuring power generators!

Pump curves, motor data Wilo-EMU K 86-4

Pump curves Wilo-EMU K 86-4

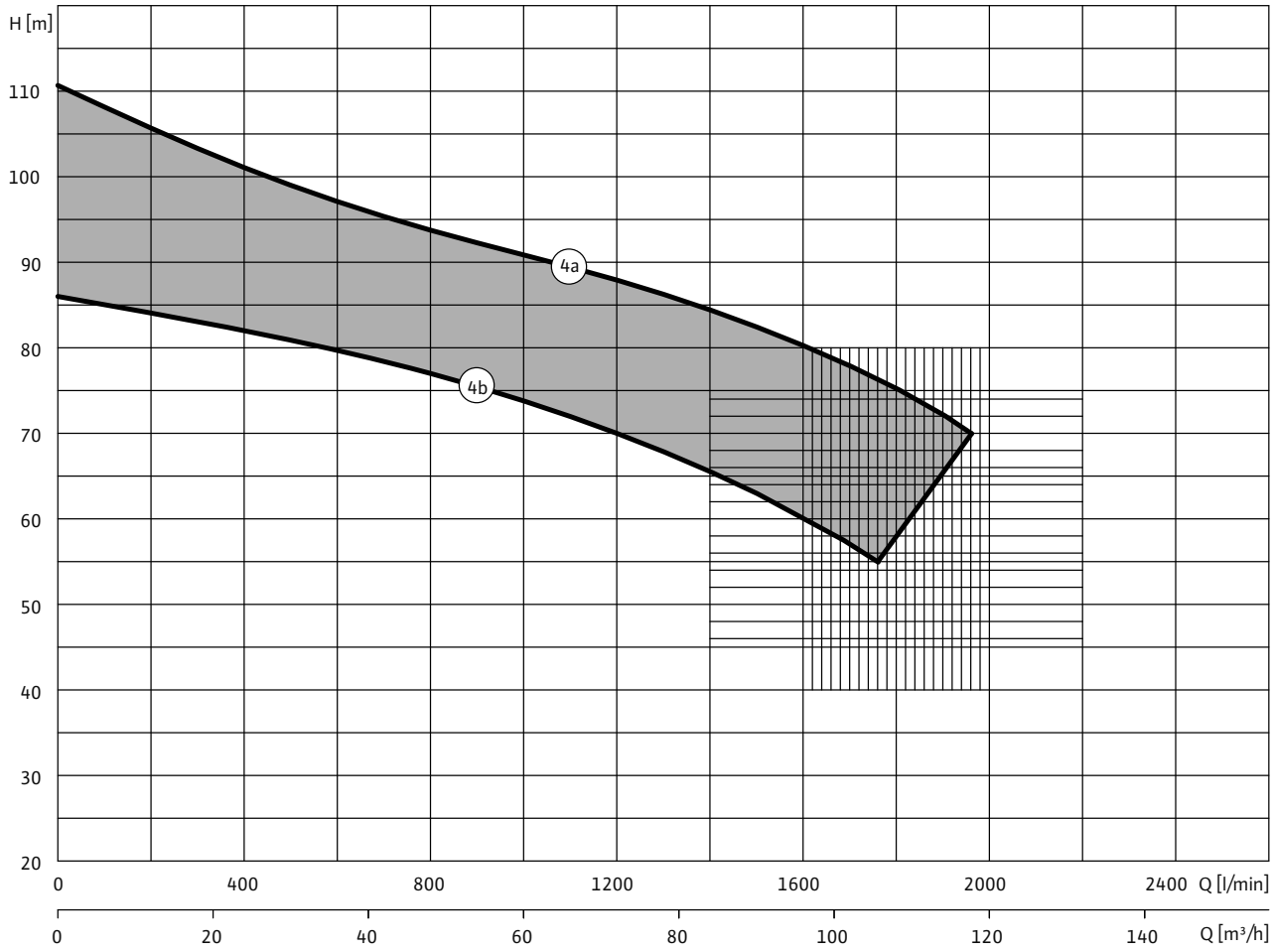

3~400 V, 50 Hz, p = 1 kg/dm^3, v = 1x10^{-6} m^2/s, ISO 9906 Annex A, η = pump efficiency

Motor data

Wilo-EMU...	Type of motor	Nominal motor power	Nominal current	Starting current - direct	Starting current - star-delta	Installation	Material code	
		P_2	I_N	I_A			A	C
		kW	A					
K 86S-4a	NU 801-2/45	35	70	365	122	V+H	•	•
K 86S-4b	NU 801-2/40	28	58	315	105	V+H	•	•

For star/delta starting, max. current peak during the switching phase; after reducing the compensatory processes and a switching phase of 80 ms. Please request a starting diagram when configuring power generators!

Dimensions, weights Wilo-EMU K 86

Dimension drawing

Wilo-EMU K 86

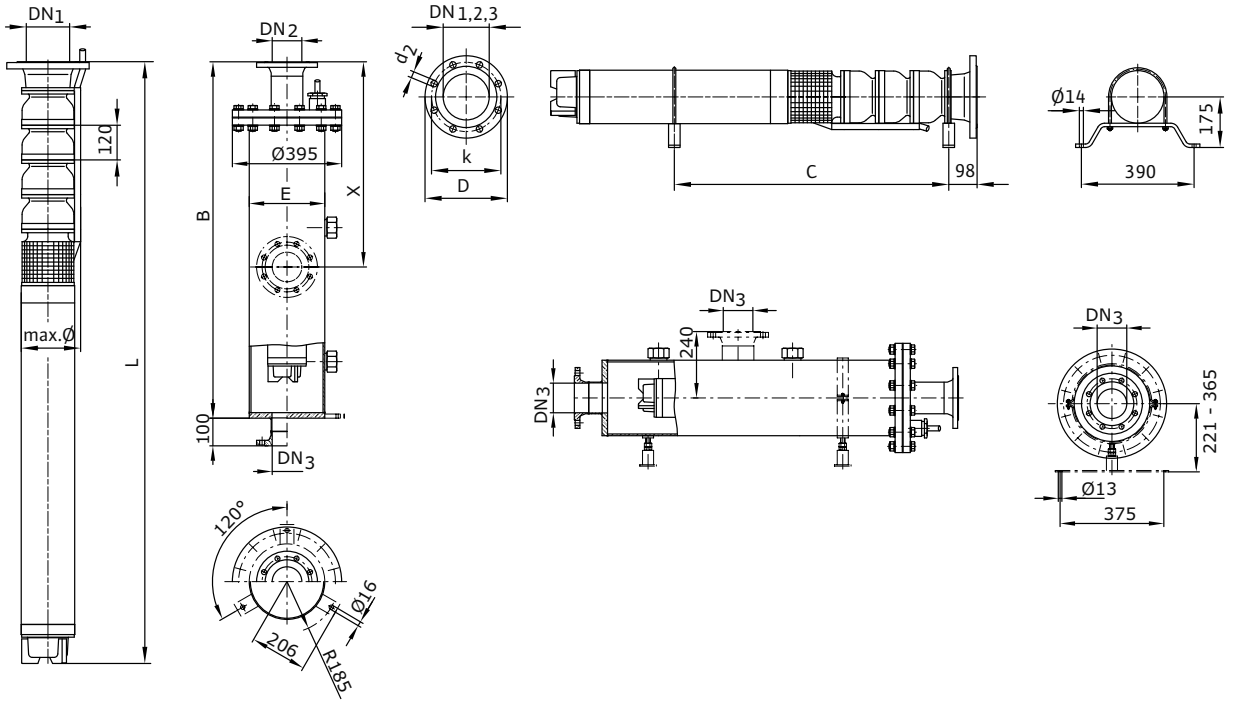

Dimensions, weights									
Wilo-EMU...	**Type of motor**	**Impeller diameter**	**Dimensions**					**Weight**	**Weight of unit**
			B	*C*	*E*	*L*	*ø* [3]	*Jacket*[7]	*m*
			mm					kg	
K 86-1a	NU 611-2/11	144/141	1700	750	273	1269	220	108	92
K 86S-1b	NU 611-2/7	131/128	1400	690	273	1144	220	100	80
K 86S-1c	NU 611-2/5	113/110	1400	670	273	1112	220	100	76
K 86-2a	NU 611-2/18	144/141	2000	940	273	1539	222	116	118
K 86S-2b	NU 611-2/15	128/125	2000	910	273	1474	220	116	111
K 86S-2c	NU 611-2/11	113/110	1700	870	273	1389	220	108	102
K 86S-3a	NU 801-2/35	142/139	2000	1030	273	1603	226	116	164
K 86S-3b	NU 801-2/28	128/125	2000	1000	273	1533	222	116	152
K 86S-3c	NU 611-2/18	123/120	2000	1060	273	1659	220	116	128
K 86S-4a	NU 801-2/45	142/139	2300	1200	273	1823	230	124	191
K 86S-4b	NU 801-2/40	128/125	2300	1180	273	1773	230	124	183

[3] For power cable in accordance with I_N (Y/Δ), max. ø for flange connection DN100
[7] Weight of pressure shroud

Flange dimensions, ordering information Wilo-EMU K 86

Flange dimensions

Wilo-EMU...	Connection			Pressure class			Dimensions		
	DN1	*DN2*	*DN3*	*PN_1*	*PN_2*	*PN_3*	*D2*	*K*	*D*
	mm			bar			mm		
K 86...	DN 100	DN 100	DN 100	10-16	10-16	10	8x18	180	220
K 86...	DN 125	DN 125	DN 125	10-16	10-16	10	8x18	210	250
K 86...	DN 150	DN 150	DN 150	10-16	10-16	10	8x22	240	285
K 86...	–	–	DN 200	–	–	10	8x22	295	340

Information for order placements

Wilo-EMU...	Type of motor	Cable cross-section	Fuse protection
			I
		mm^2	A
K 86-1a	NU 611-2/11	2x 4G4	32
K 86S-1b	NU 611-2/7	2x 4G2.5	20
K 86S-1c	NU 611-2/5	2x 4G2.5	16
K 86-2a	NU 611-2/18	2x 4G6	50
K 86S-2b	NU 611-2/15	2x 4G4	35
K 86S-2c	NU 611-2/11	2x 4G4	32
K 86S-3a	NU 801-2/35	4G10 + 3x10	63
K 86S-3b	NU 801-2/28	4G6 + 3x6	50
K 86S-3c	NU 611-2/18	2x 4G6	50
K 86S-4a	NU 801-2/45	4G16 + 3x16	80
K 86S-4b	NU 801-2/40	4G16 + 3x16	80

[3)] For power cable in accordance with I_N (Y/Δ), max. ø for flange connection DN100
[7)] Weight of pressure shroud

Ordering information for standard pumps

Wilo-EMU...	Type of motor	Activation type	Cable cross-section	Length of connecting cable	Fuse protection	🚚	Art no.
					I		
			mm^2	m	A		
K 86-2a	NU 611-2/18	Star-delta	2x 4G6	25	50	L	**6066610**

Overview pump curve Wilo-EMU K 87

Overview pump curve Wilo-EMU KM 87

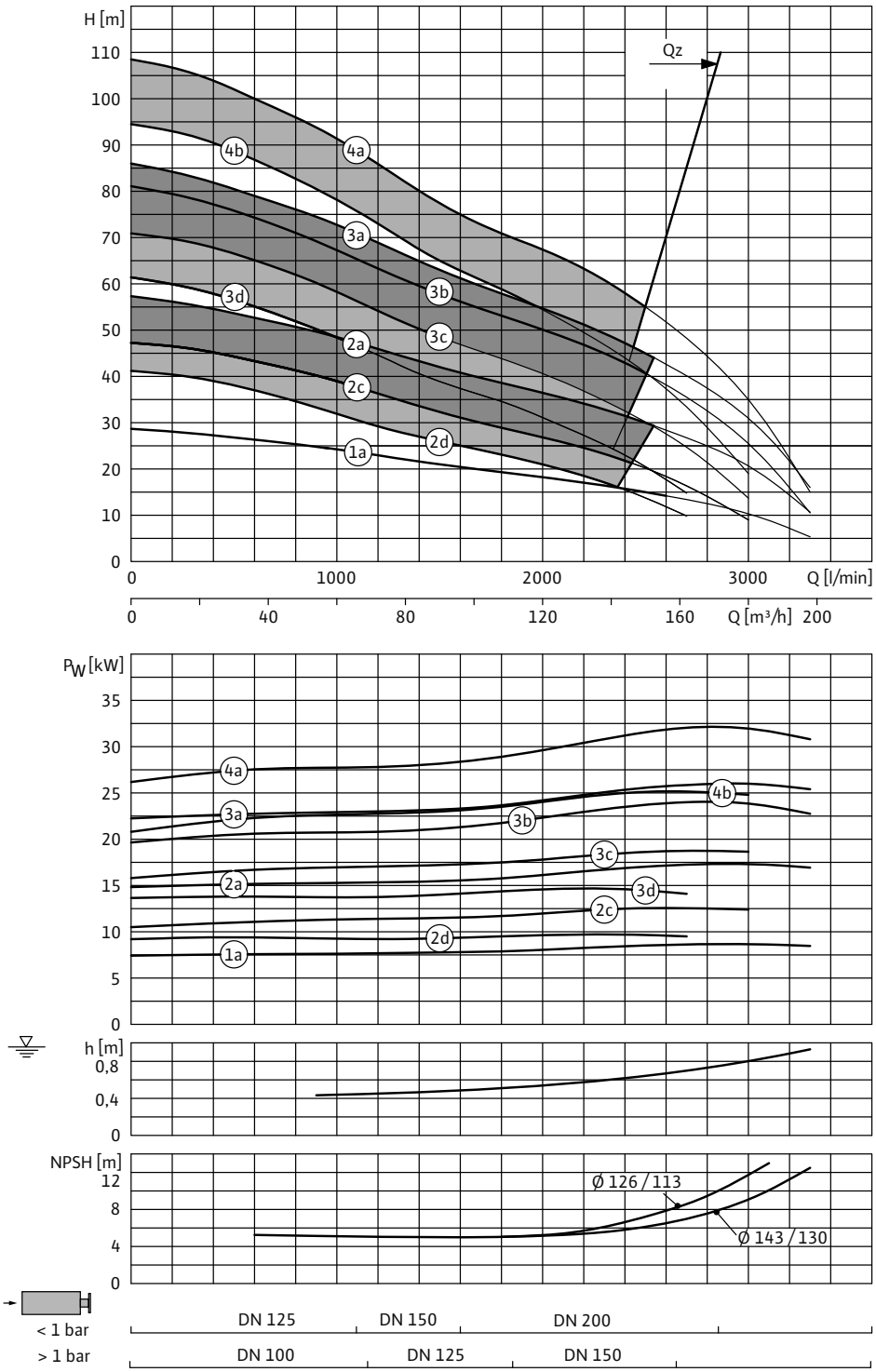

4a = K 87S-4a + NU 801-2/45
4b = K 87S-4b + NU 801-2/40

3a = K 87-3a + NU 801-2/40
3b = K 87S-3b + NU 801-2/35
3c = K 87S-3c + NU 801-2/28
3d = K 87S-3d + NU 611-2/18

2a = K 87-2a + NU 611-2/22
2c = K 87S-2c + NU 611-2/15
2d = K 87S-2d + NU 611-2/11

1a = K 87-1a + NU 611-2/11

3~400 V, 50 Hz, p = 1 kg/dm^3, ν = 1x10^{-6} m^2/s, ISO 9906 Annex A

Pump curves, motor data Wilo-EMU K 87-1

Pump curves Wilo-EMU K 87-1

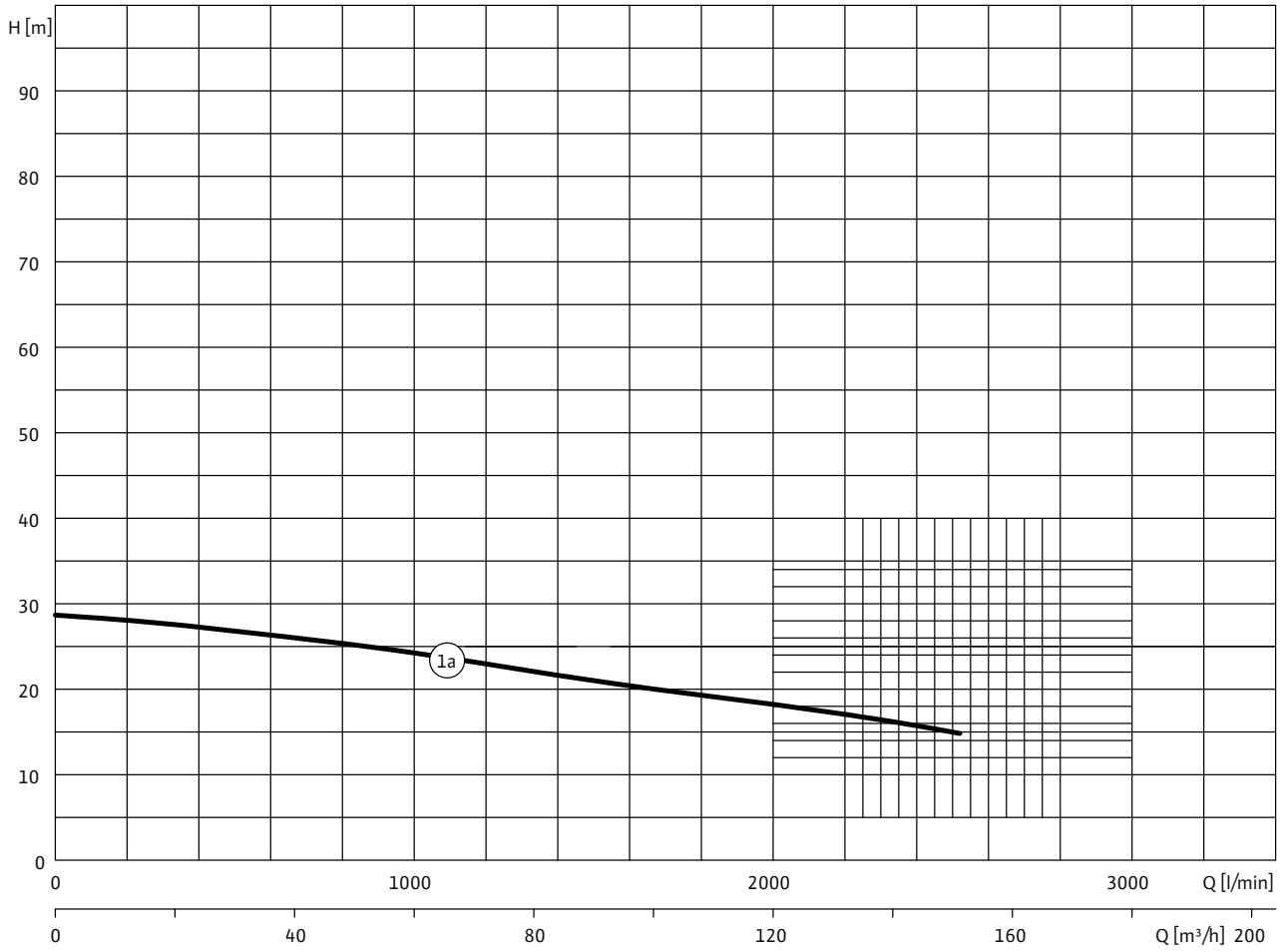

3~400 V, 50 Hz, p = 1 kg/dm^3, v = 1x10^{-6} m^2/s, ISO 9906 Annex A, η = pump efficiency

Motor data

Wilo-EMU...	Type of motor	Nominal motor power	Nominal current	Starting current - direct	Starting current - star-delta	Installation	Material code	
		P_2	I_N	I_A			A	C
		kW	A					
K 87-1a	NU 611-2/11	9.5	21	121	40.5	V+H	•	•

For star/delta starting, max. current peak during the switching phase; after reducing the compensatory processes and a switching phase of 80 ms. Please request a starting diagram when configuring power generators!

Pump curves, motor data Wilo-EMU K 87-2

Pump curves Wilo-EMU K 87-2

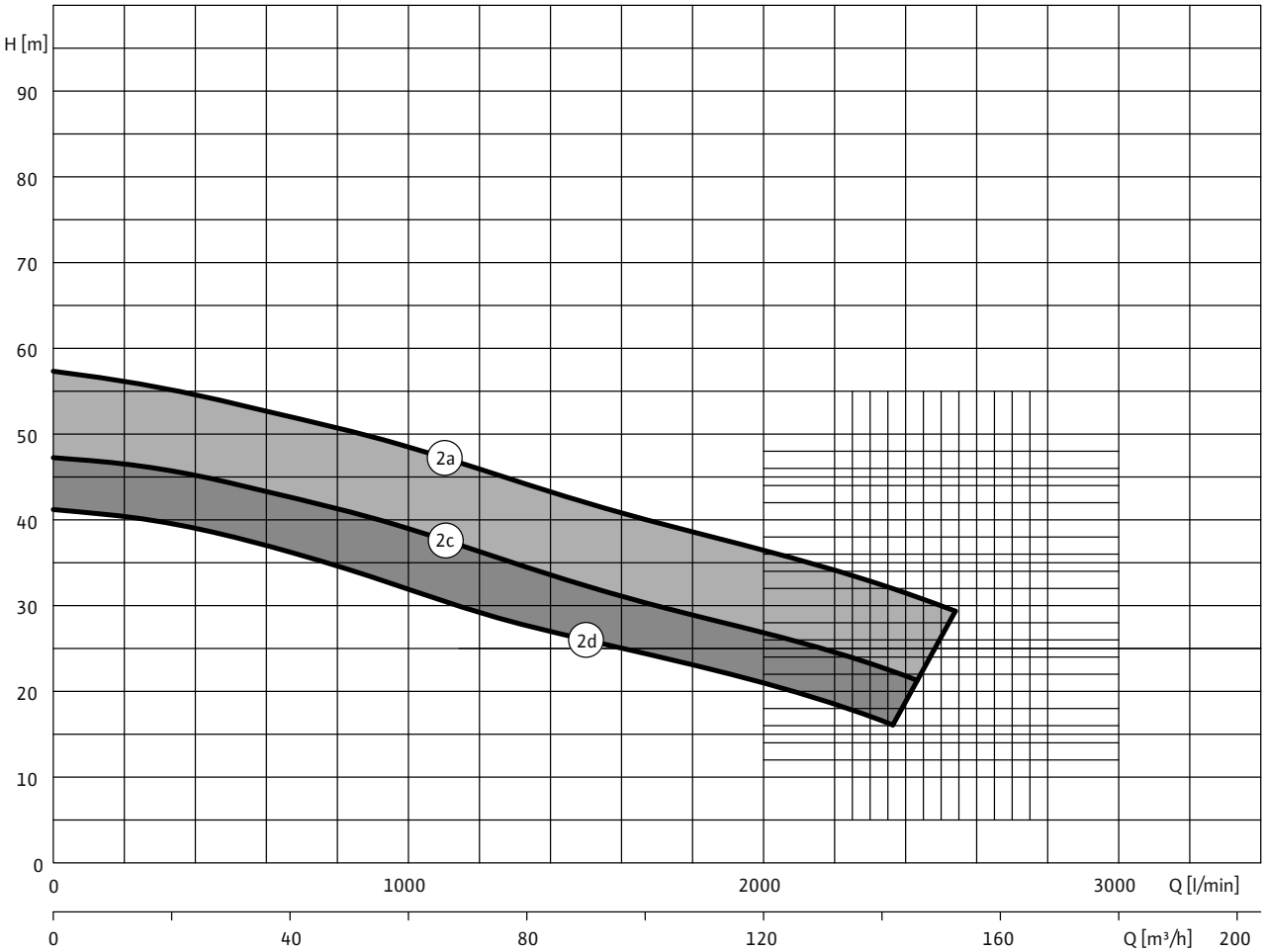

3~400 V, 50 Hz, p = 1 kg/dm^3, v = 1x10^{-6} m^2/s, ISO 9906 Annex A, η = pump efficiency

Motor data

Wilo-EMU...	Type of motor	Nominal motor power	Nominal current	Starting current - direct	Starting current - star-delta	Installation	Material code	
		P_2	I_N	I_A			A	C
		kW	A					
K 87-2a	NU 611-2/22	19	42.5	245	82	V+H	•	•
K 87S-2c	NU 611-2/15	14	30.5	160	54	V+H	•	•
K 87S-2d	NU 611-2/11	11	23.5	121	40.5	V+H	•	•

For star/delta starting, max. current peak during the switching phase; after reducing the compensatory processes and a switching phase of 80 ms. Please request a starting diagram when configuring power generators!

Pump curves, motor data Wilo-EMU K 87-3

Pump curves Wilo-EMU K 87-3

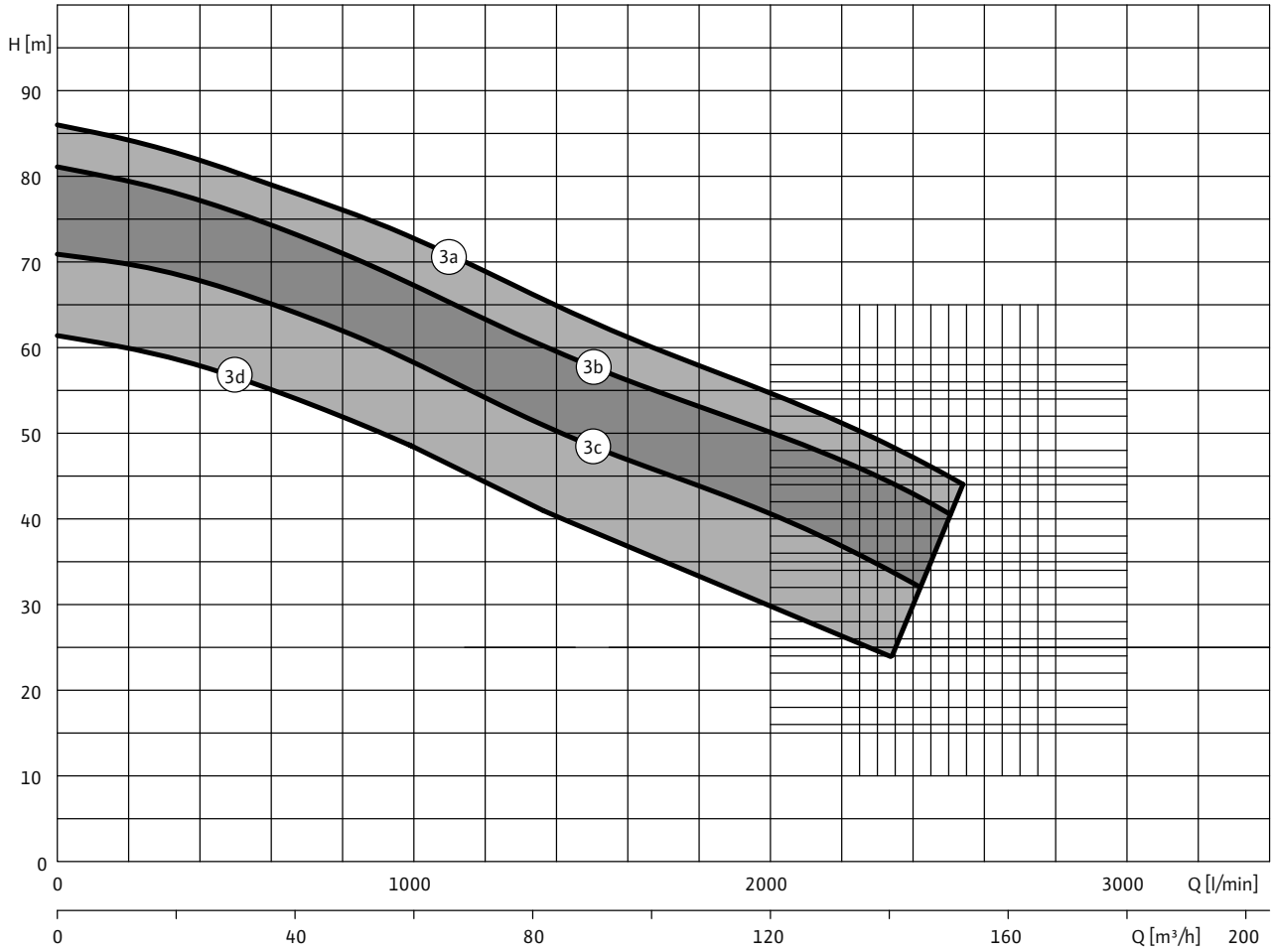

3~400 V, 50 Hz, p = 1 kg/dm^3, v = 1x10^{-6} m^2/s, ISO 9906 Annex A, η = pump efficiency

Motor data

Wilo-EMU...	Type of motor	Nominal motor power	Nominal current	Starting current - direct	Starting current - star-delta	Installation	Material code	
		P_2	I_N	I_A			A	C
		kW	A					
K 87-3a	NU 801-2/40	28	58	315	105	V+H	•	•
K 87-3b	NU 801-2/35	26	52	270	90	V+H	•	•
K 87S-3b	NU 801-2/35	26	52	270	90	V+H	•	•
K 87-3c	NU 801-2/28	21	42.5	186	62	V+H	•	•
K 87S-3c	NU 801-2/28	21	42.5	186	62	V+H	•	•
K 87S-3d	NU 611-2/18	18	39	205	69	V+H	•	•

For star/delta starting, max. current peak during the switching phase; after reducing the compensatory processes and a switching phase of 80 ms. Please request a starting diagram when configuring power generators!

Pump curves, motor data Wilo-EMU K 87-4

Pump curves Wilo-EMU K 87-4

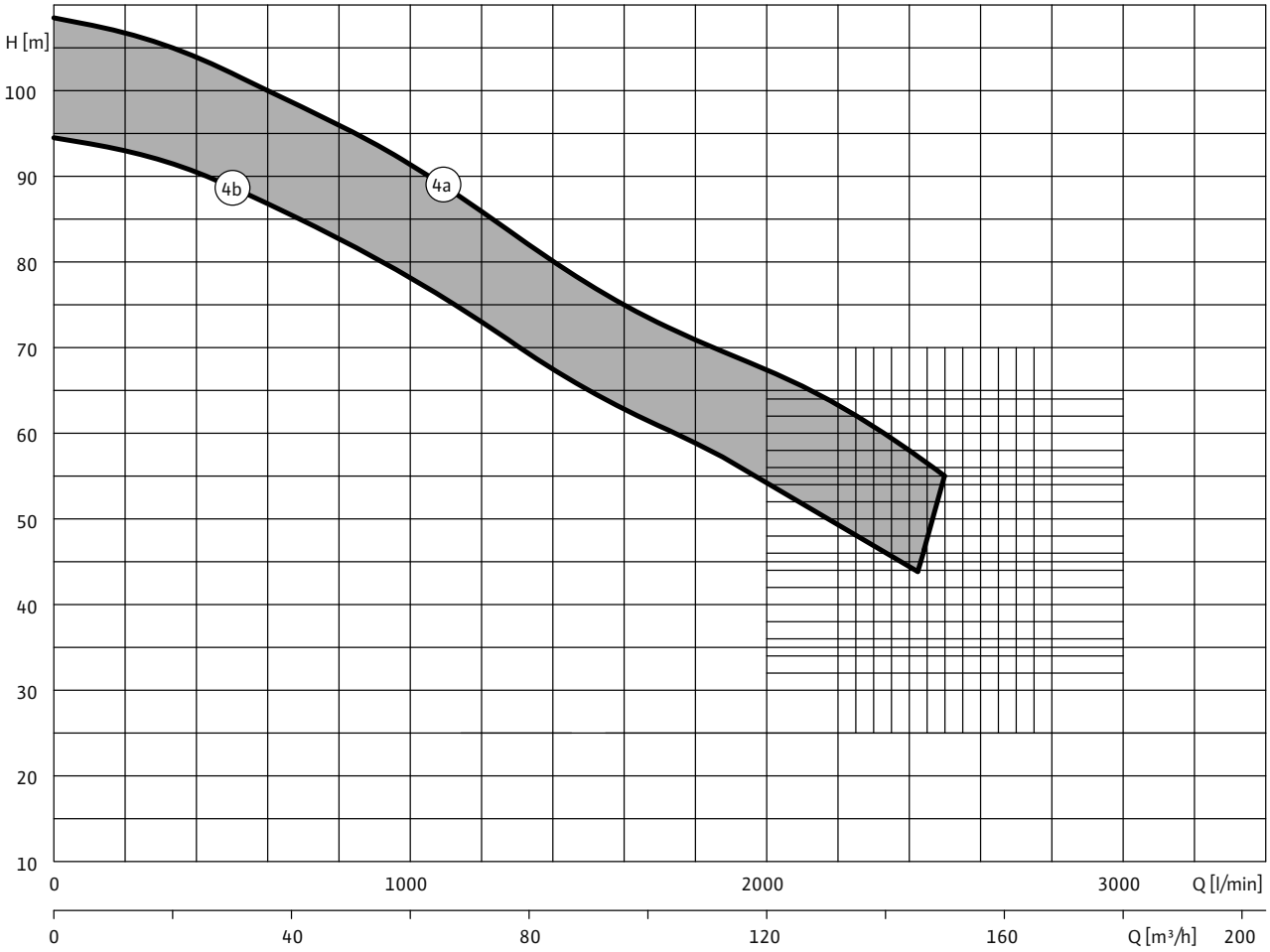

3~400 V, 50 Hz, p = 1 kg/dm^3, v = 1x10^{-6} m^2/s, ISO 9906 Annex A, η = pump efficiency

Motor data

Wilo-EMU...	Type of motor	Nominal motor power	Nominal current	Starting current - direct	Starting current - star-delta	Installation	Material code	
		P_2	I_N	I_A			A	C
		kW	A					
K 87S-4a	NU 801-2/45	34	68	365	122	V+H	•	•
K 87S-4b	NU 801-2/40	28	58	315	105	V+H	•	•

For star/delta starting, max. current peak during the switching phase; after reducing the compensatory processes and a switching phase of 80 ms. Please request a starting diagram when configuring power generators!

Dimensions, weights Wilo-EMU K 87

Dimension drawing

Wilo-EMU K 87

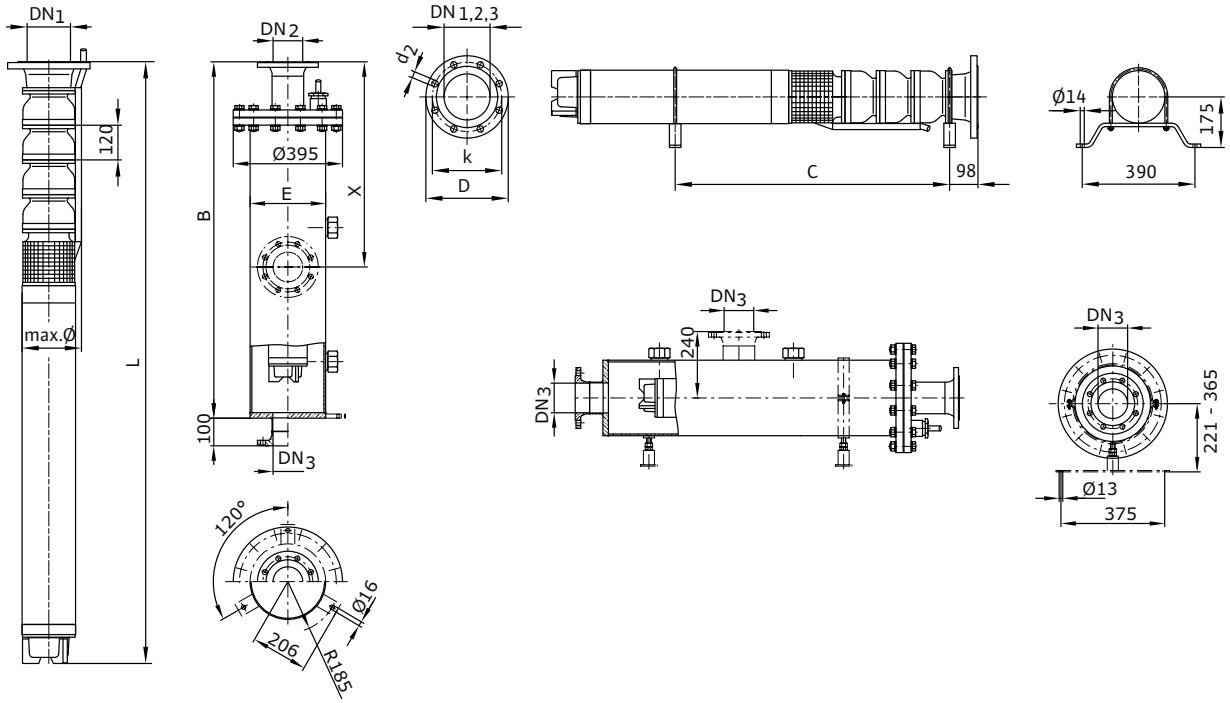

Dimensions, weights									
Wilo-EMU...	**Type of motor**	**Impeller diameter**	**Dimensions**					**Weight**	**Weight of unit**
			B	*C*	*E*	*L*	*ø* [3]	*Jacket*[7]	*m*
			mm					kg	
K 87-1a	NU 611-2/11	143/130	1700	750	273	1269	220	108	92
K 87-2a	NU 611-2/22	143/130	2000	980	273	1614	222	116	125
K 87S-2c	NU 611-2/15	129/116	2000	910	273	1474	220	116	111
K 87S-2d	NU 611-2/11	126/113	1700	870	273	1389	220	108	102
K 87-3a	NU 801-2/40	143/130	2000	1060	273	1653	230	116	173
K 87-3b	NU 801-2/35	137/124	2000	1030	273	1603	226	116	164
K 87S-3b	NU 801-2/35	137/124	2000	1030	273	1603	226	116	164
K 87-3c	NU 801-2/28	129/116	2000	1000	273	1533	222	116	153
K 87S-3c	NU 801-2/28	129/116	2000	1000	273	1533	222	116	152
K 87S-3d	NU 611-2/18	126/113	2000	1060	273	1659	222	116	128
K 87S-4a	NU 801-2/45	137/124	2300	1200	273	1823	230	124	191
K 87S-4b	NU 801-2/40	129/116	2300	1180	273	1773	230	124	183

[3] For power cable in accordance with I_N (Y/Δ), max. ø for flange connection DN100
[7] Weight of pressure shroud

Flange dimensions, ordering information Wilo-EMU K 87

Flange dimensions

Wilo-EMU...	Connection			Pressure class			Dimensions		
	DN1	*DN2*	*DN3*	*PN_1*	*PN_2*	*PN_3*	*D2*	*K*	*D*
	mm			bar			mm		
K 87...	DN 100	DN 100	DN 100	10-16	10-16	10	8x18	180	220
K 87...	DN 125	DN 125	DN 125	10-16	10-16	10	8x18	210	250
K 87...	DN 150	DN 150	DN 150	10-16	10-16	10	8x22	240	285
K 87...	–	–	DN 200	–	–	10	8x22	295	340

Information for order placements

Wilo-EMU...	Type of motor	Cable cross-section	Fuse protection
			I
		mm^2	A
K 87-1a	NU 611-2/11	2x 4G4	40
K 87-2a	NU 611-2/22	2x 4G6	50
K 87S-2c	NU 611-2/15	2x 4G4	35
K 87S-2d	NU 611-2/11	2x 4G4	32
K 87-3a	NU 801-2/40	4G16 + 3x16	80
K 87S-3b	NU 801-2/35	4G10 + 3x10	63
K 87S-3c	NU 801-2/28	4G6 + 3x6	50
K 87S-3d	NU 611-2/18	2x 4G6	50
K 87S-4a	NU 801-2/45	4G16 + 3x16	80
K 87S-4b	NU 801-2/40	4G16 + 3x16	80

3) For power cable in accordance with I_N (Y/Δ), max. ø for flange connection DN100
7) Weight of pressure shroud

Ordering information for standard pumps

Wilo-EMU...	Type of motor	Activation type	Cable cross-section	Length of connecting cable	Fuse protection		Art no.
					I		
			mm^2	m	A		
K 87-3a	NU 801-2/40	Star-delta	4G16 + 3x16	25	80	L	**6066611**
K 87-3b	NU 801-2/35	Star-delta	4G10 + 3x10	25	63	L	**6066612**
K 87-3c	NU 801-2/28	Star-delta	4G6 + 3x6	25	50	L	**6066613**

Overview pump curve Wilo-EMU KM 350

Overview pump curve Wilo-EMU KM 350

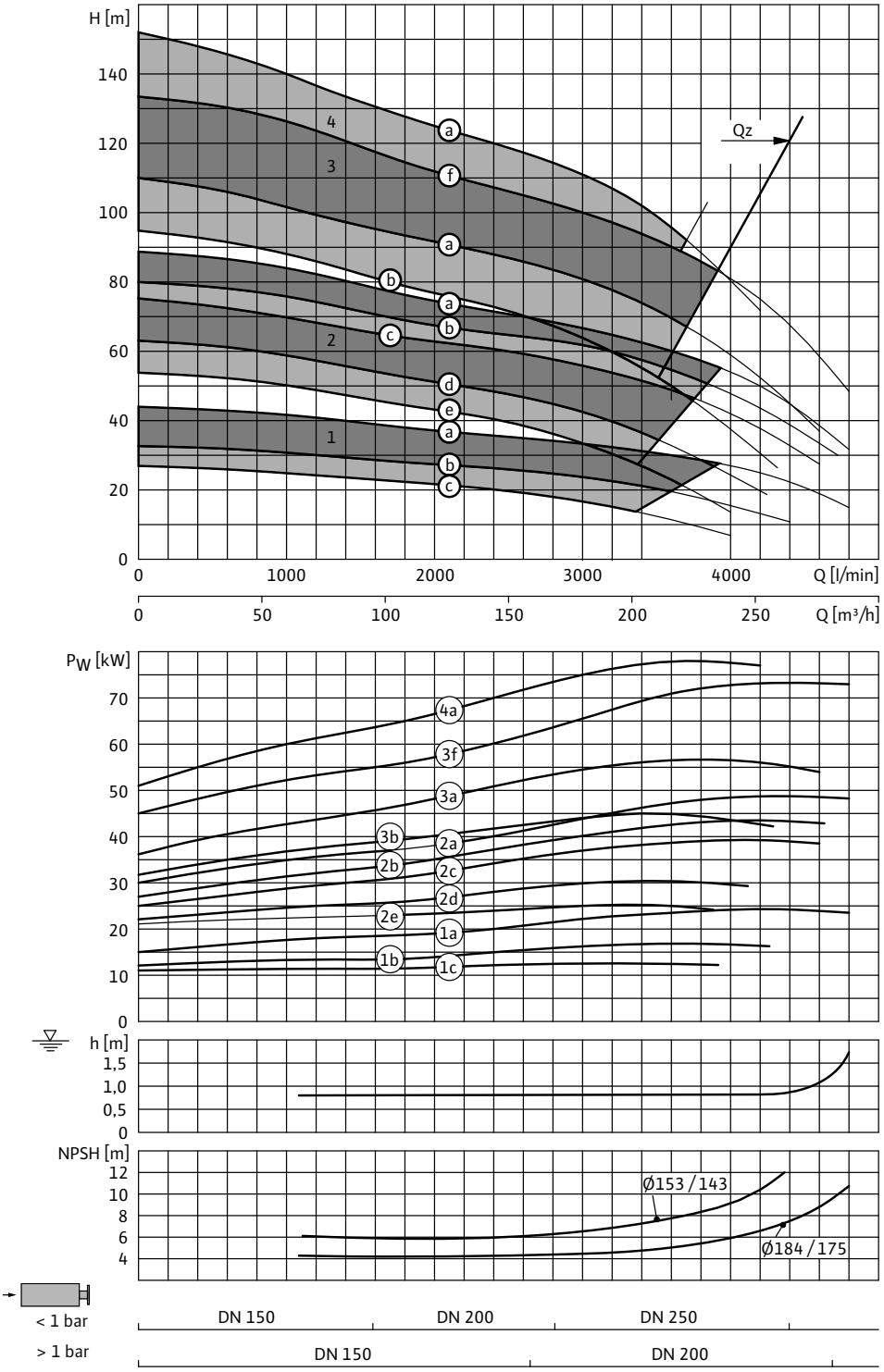

4a = KM 350S-4a + NU 911-2/60

3a = KM 350S-3a + NU 911-2/45
3b = KM 350S-3b + NU 801-2/60
3f = KM 350-3f + NU 911-2/50

2a = KM 350-2a + NU 801-2/68
2a = KM 350-2a + NU 911-2/45
2b = KM 350S-2b + NU 801-2/60
2c = KM 350S-2c + NU 801-2/55
2d = KM 350S-2d + NU 801-2/45
2e = KM 350S-2e + NU 801-2/40

1a = KM 350-1a + NU 801-2/35
1b = KM 350S-1b + NU 801-2/28
1c = KM 350S-1c + NU 801-2/28

3~400 V, 50 Hz, p = 1 kg/dm^3, v = 1x10^{-6} m^2/s, ISO 9906 Annex A

Pump curves, motor data Wilo-EMU KM 350-1

Pump curves Wilo-EMU KM 350-1

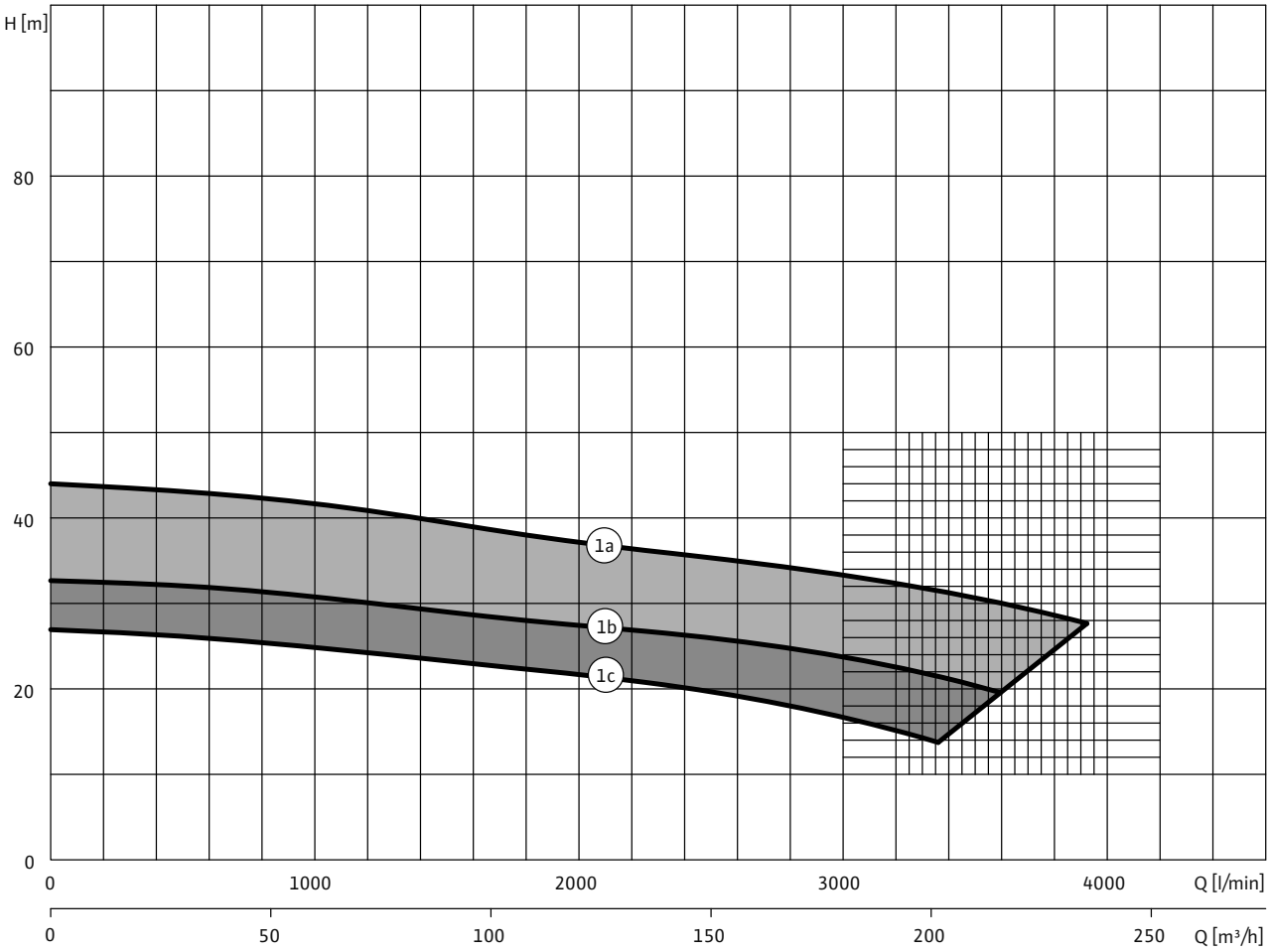

3~400 V, 50 Hz, p = 1 kg/dm^3, v = 1x10^{-6} m^2/s, ISO 9906 Annex A, η = pump efficiency

Motor data

Wilo-EMU...	Type of motor	Nominal motor power	Nominal current	Starting current - direct	Starting current - star-delta	Installation	Material code	
		P_2	I_N	I_A			A	C
		kW	A					
KM 350-1a	NU 801-2/35	27.5	55	270	90	V+H	•	•
KM 350S-1b	NU 801-2/28	19	39	186	62	V+H	•	•
KM 350S-1c	NU 801-2/28	15	33.5	186	62	V+H	•	•

For star/delta starting, max. current peak during the switching phase; after reducing the compensatory processes and a switching phase of 80 ms. Please request a starting diagram when configuring power generators!

Pump curves, motor data Wilo-EMU KM 350-2

Pump curves Wilo-EMU KM 350-2

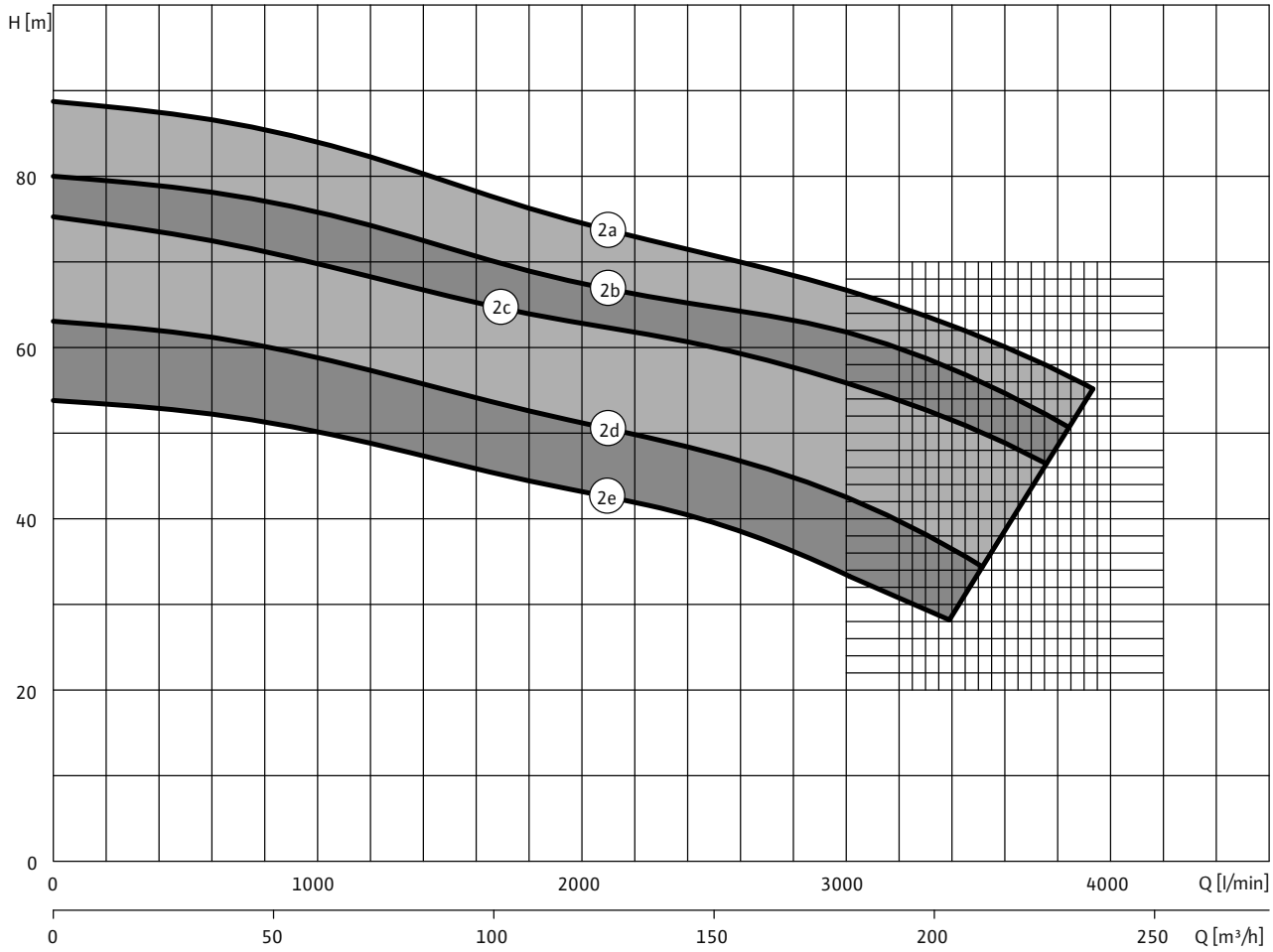

3~400 V, 50 Hz, p = 1 kg/dm^3, v = 1x10^{-6} m^2/s, ISO 9906 Annex A, η = pump efficiency

Motor data

Wilo-EMU...	Type of motor	Nominal motor power	Nominal current	Starting current - direct	Starting current - star-delta	Installation	Material code	
		P_2	I_N	I_A			A	C
		kW	A					
KM 350-2a	NU 801-2/68	55	106	650	220	V	•	•
KM 350-2a	NU 911-2/45	55	116	700	235	V+H	•	•
KM 350S-2b	NU 801-2/60	53	104	580	194	V+H	•	•
KM 350S-2c	NU 801-2/55	46	92	530	177	V+H	•	•
KM 350S-2d	NU 801-2/45	36	72	365	122	V+H	•	•
KM 350S-2e	NU 801-2/40	30	60	315	105	V+H	•	•

For star/delta starting, max. current peak during the switching phase; after reducing the compensatory processes and a switching phase of 80 ms. Please request a starting diagram when configuring power generators!

Pump curves, motor data Wilo-EMU KM 350-3

Pump curves Wilo-EMU KM 350-3

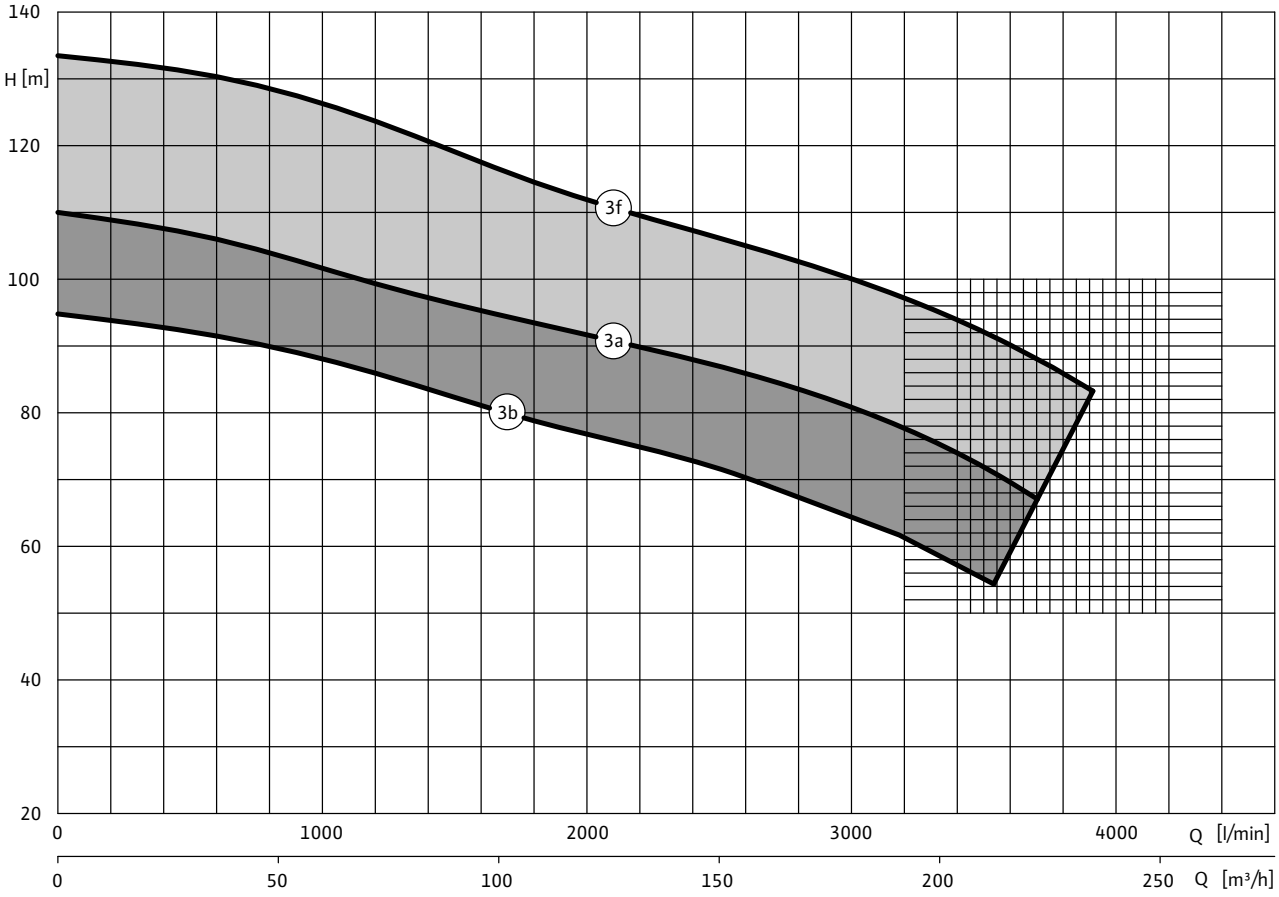

3~400 V, 50 Hz, p = 1 kg/dm^3, v = 1x10^{-6} m^2/s, ISO 9906 Annex A, η = pump efficiency

Motor data

Wilo-EMU...	Type of motor	Nominal motor power	Nominal current	Starting current - direct	Starting current - star-delta	Installation	Material code	
		P_2	I_N	I_A			A	C
		kW	A					
KM 350S-3a	NU 911-2/45	70	141	700	235	V+H	•	•
KM 350S-3b	NU 801-2/60	53	104	580	194	V+H	•	•
KM 350-3f	NU 911-2/50	85	168	780	260	V+H	–	•

For star/delta starting, max. current peak during the switching phase; after reducing the compensatory processes and a switching phase of 80 ms. Please request a starting diagram when configuring power generators!

Pump curves, motor data Wilo-EMU KM 350-4

Pump curves Wilo-EMU KM 350-4

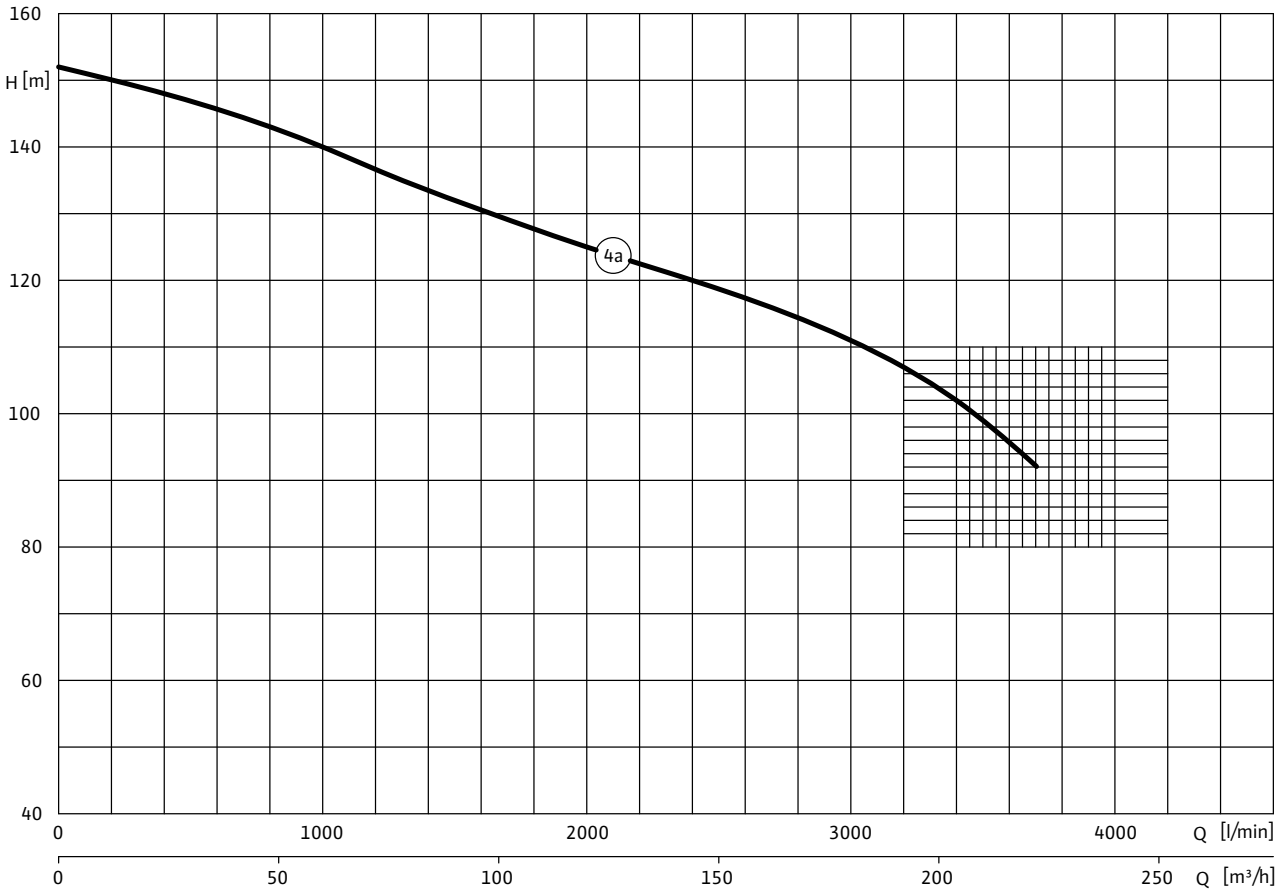

3~400 V, 50 Hz, p = 1 kg/dm^3, v = 1x10^{-6} m^2/s, ISO 9906 Annex A, η = pump efficiency

Motor data

Wilo-EMU...	Type of motor	Nominal motor power	Nominal current	Starting current - direct	Starting current - star-delta	Installation	Material code	
		P_2	I_N	I_A			A	C
		kW	A					
KM 350S-4a	NU 911-2/60	105	210	1280	430	V+H	–	•

For star/delta starting, max. current peak during the switching phase; after reducing the compensatory processes and a switching phase of 80 ms. Please request a starting diagram when configuring power generators!

Dimensions, weights Wilo-EMU KM 350

Dimension drawing

Wilo-EMU KM 350

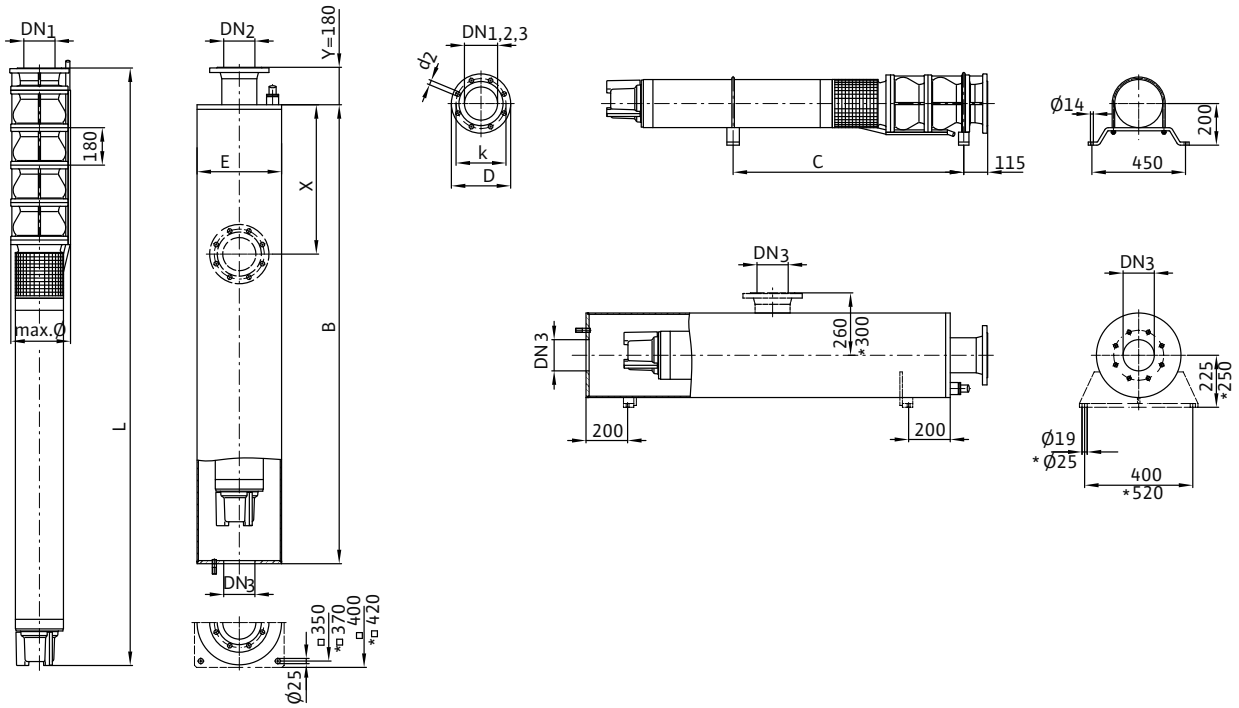

Dimensions, weights									
Wilo-EMU...	**Type of motor**	**Impeller diameter**	**Dimensions**					**Weight**	**Weight of unit**
			B	*C*	*E*	*L*	*ø* [3]	*Jacket*[7]	*m*
			mm					kg	
KM 350-1a	NU 801-2/35	184/175	1690	930	355.6	1515	297	127	192
KM 350S-1b	NU 801-2/28	164/154	1620	900	355.6	1445	290	123	180
KM 350S-1c	NU 801-2/28	153/143	1620	900	355.6	1445	288	123	180
KM 350-2a	NU 801-2/68	184/175	2200	–	355.6	2025	287	151	284
KM 350-2a	NU 911-2/45	184/175	2180	1280	406.4*	2010	313	200	347
KM 350S-2b	NU 801-2/60	176/167	2120	1240	355.6	1945	287	147	270
KM 350S-2c	NU 801-2/55	171/161	2070	1210	355.6	1895	287	145	262
KM 350S-2d	NU 801-2/45	161/151	1970	1160	355.6	1795	298	140	244
KM 350S-2e	NU 801-2/40	153/143	1920	1140	355.6	1745	298	138	236
KM 350S-3a	NU 911-2/45	170/160	2360	1460	406.4*	2190	313	215	381
KM 350S-3b	NU 801-2/60	161/151	2300	1420	355.6	2125	287	156	304
KM 350-3f	NU 911-2/50	184/175	2410	1480	406.4*	2240	295	220	395
KM 350S-4a	NU 911-2/60	170/160	2690	1710	406.4*	2520	295	235	455

[3] For power cable in accordance with I_N (Y/Δ), max. ø for flange connection DN150
[7] Weight of pressure shroud
* only with DN 150

Flange dimensions, ordering information Wilo-EMU KM 350

Flange dimensions

Wilo-EMU...	Connection			Pressure class			Dimensions		
	DN1	*DN2*	*DN3*	*PN_1*	*PN_2*	*PN_3*	*D2*	*K*	*D*
	mm			bar			mm		
KM 350...	DN 150	DN 150	DN 150	10-16	10-16	10	8x22	240	285
KM 350...	–	–	DN 200	–	–	10	8x22	295	340
KM 350...	–	–	DN 250	–	–	10	12x22	350	395

Information for order placements

Wilo-EMU...	Type of motor	Cable cross-section	Fuse protection
			I
		mm^2	A
KM 350-1a	NU 801-2/35	4G10 + 3x10	63
KM 350S-1b	NU 801-2/28	4G6 + 3x6	50
KM 350S-1c	NU 801-2/28	4G4 + 3x4	40
KM 350-2a	NU 801-2/68	7x1x16	125
KM 350-2a	NU 911-2/45	4G35 + 3x35	160
KM 350S-2b	NU 801-2/60	7x1x16	125
KM 350S-2c	NU 801-2/55	7x1x16	125
KM 350S-2d	NU 801-2/45	4G16 + 3x16	80
KM 350S-2e	NU 801-2/40	4G16 + 3x16	80
KM 350S-3a	NU 911-2/45	4G35 + 3x35	160
KM 350S-3b	NU 801-2/60	7x1x16	125
KM 350-3f	NU 911-2/50	7x1x35	200
KM 350S-4a	NU 911-2/60	7x1x35	250

3) For power cable in accordance with I_N (Y/Δ), max. ø for flange connection DN150
7) Weight of pressure shroud
* only with DN 150

Ordering information for standard pumps

Wilo-EMU...	Type of motor	Activation type	Cable cross-section	Length of connecting cable	Fuse protection		Art no.
					I		
			mm^2	m	A		
KM 350-2a	NU 911-2/45	Star-delta	4G35 + 3x35	25	160	L	**6065508**
KM 350S-2b	NU 801-2/60	Star-delta	7x1x16	25	125	L	**6065507**
KM 350S-2c	NU 801-2/55	Star-delta	7x1x16	25	125	L	**6065506**
KM 350S-2d	NU 801-2/45	Star-delta	4G16 + 3x16	25	80	L	**6065505**

Overview pump curve Wilo-EMU KM 750

Overview pump curve Wilo-EMU KM 750

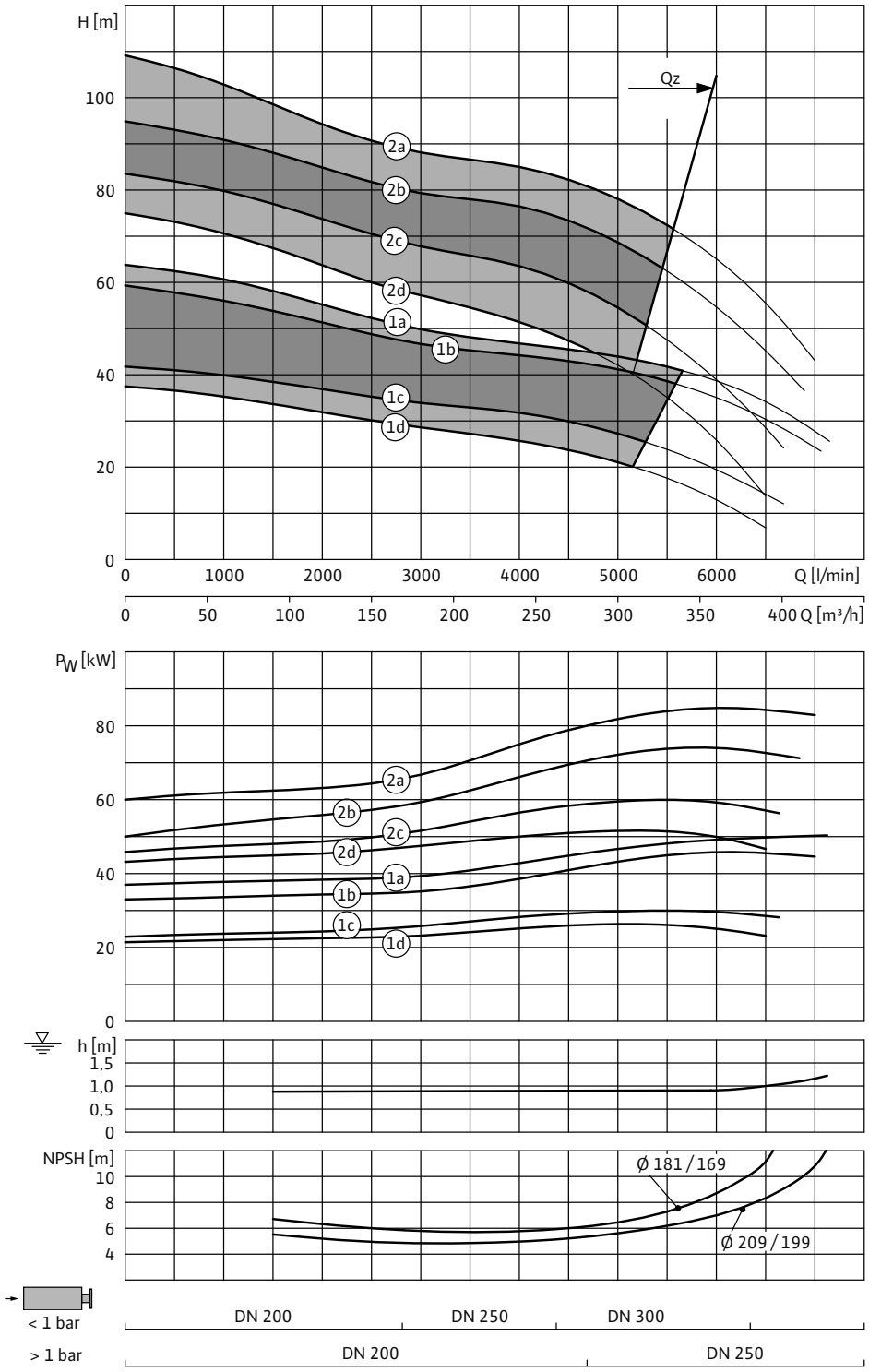

2a = KM 750S-2a + NU 911-2/60
2b = KM 750S-2b + NU 911-2/50
2c = KM 750S-2c + NU 911-2/45
2d = KM 750S-2d + NU 911-2/45

1a = KM 750-1a + NU 801-2/68
1a = KM 750-1a + NU 911-2/45
1b = KM 750S-1b + NU 801-2/60
1c = KM 750S-1c + NU 801-2/45
1d = KM 750S-1d + NU 801-2/40

3~400 V, 50 Hz, p = 1 kg/dm^3, v = 1x10^{-6} m^2/s, ISO 9906 Annex A

Pump curves, motor data Wilo-EMU KM 750-1

Pump curves Wilo-EMU KM 750-1

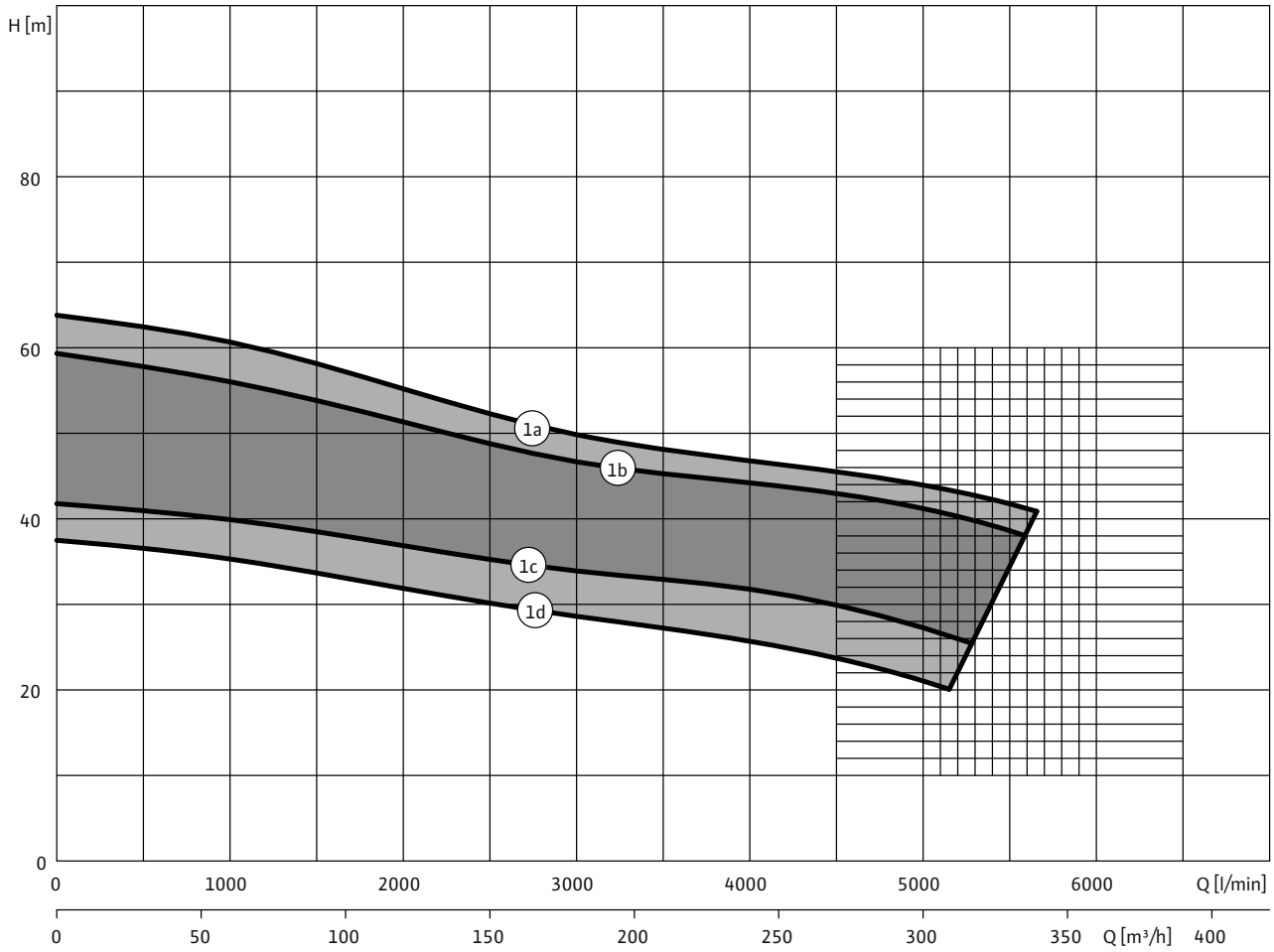

3~400 V, 50 Hz, p = 1 kg/dm^3, v = 1x10^{-6} m^2/s, ISO 9906 Annex A, η = pump efficiency

Motor data

Wilo-EMU...	Type of motor	Nominal motor power	Nominal current	Starting current - direct	Starting current - star-delta	Installation	Material code	
		P_2	I_N	I_A			A	C
		kW	A					
KM 750-1a	NU 801-2/68	56	108	650	220	V	•	•
KM 750-1a	NU 911-2/45	56	118	700	235	V+H	•	•
KM 750S-1b	NU 801-2/60	53	104	580	194	V+H	•	•
KM 750S-1c	NU 801-2/45	35	70	365	122	V+H	•	•
KM 750S-1d	NU 801-2/40	32	61	315	105	V+H	•	•

For star/delta starting, max. current peak during the switching phase; after reducing the compensatory processes and a switching phase of 80 ms. Please request a starting diagram when configuring power generators!

Pump curves, motor data Wilo-EMU KM 750-2

Pump curves Wilo-EMU KM 750-2

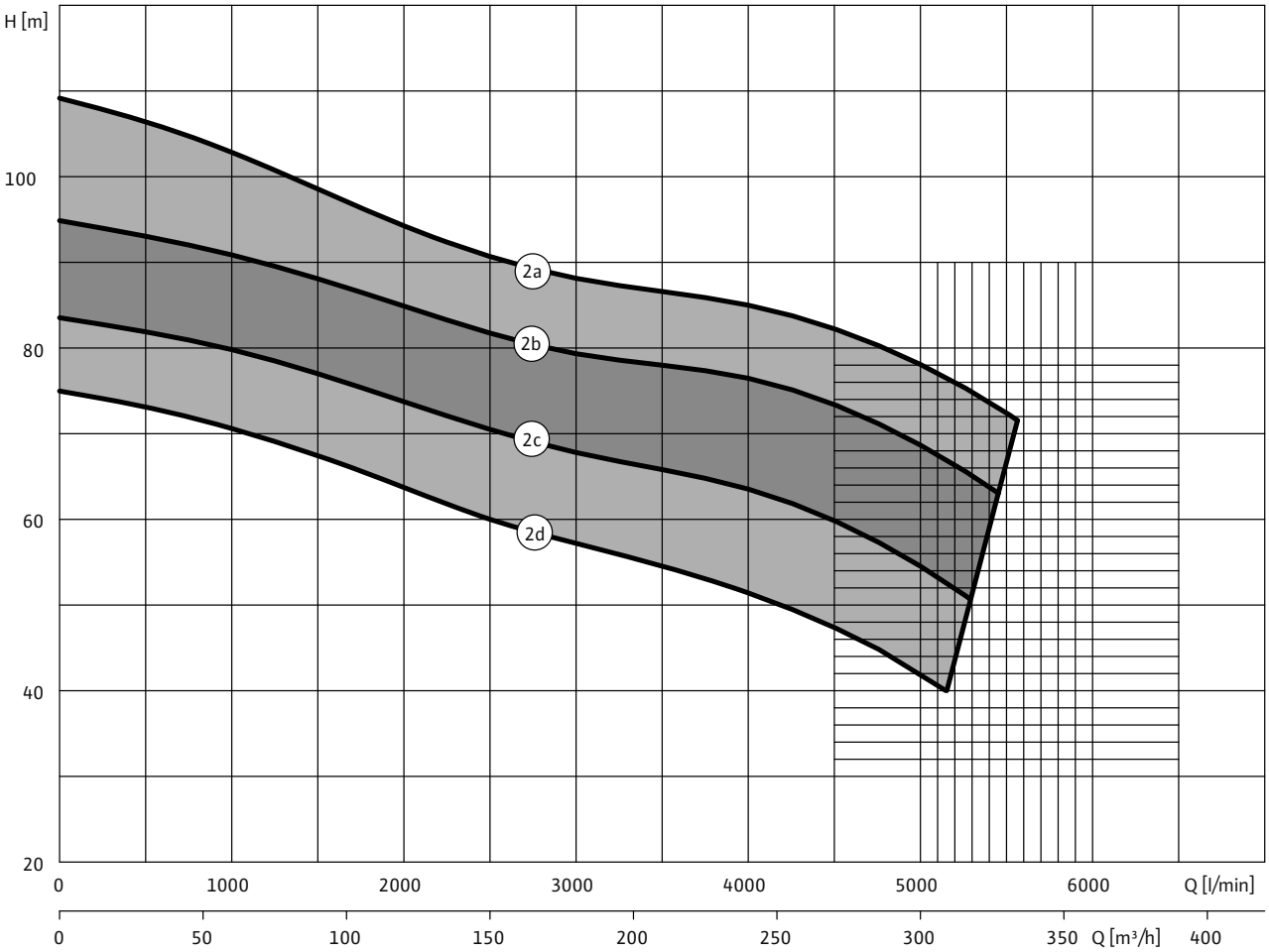

3~400 V, 50 Hz, p = 1 kg/dm^3, v = 1x10^{-6} m^2/s, ISO 9906 Annex A, η = pump efficiency

Motor data

Wilo-EMU...	Type of motor	Nominal motor power	Nominal current	Starting current - direct	Starting current - star-delta	Installation	Material code	
		P_2	I_N	I_A			A	C
		kW	A					
KM 750S-2a	NU 911-2/60	100	205	1280	430	V+H	•	•
KM 750S-2b	NU 911-2/50	85	168	780	260	V+H	•	•
KM 750S-2c	NU 911-2/45	70	141	700	235	V+H	•	•
KM 750S-2d	NU 911-2/45	64	130	700	235	V+H	•	•

For star/delta starting, max. current peak during the switching phase; after reducing the compensatory processes and a switching phase of 80 ms. Please request a starting diagram when configuring power generators!

Dimensions, weights Wilo-EMU KM 750

Dimension drawing

Wilo-EMU KM 750

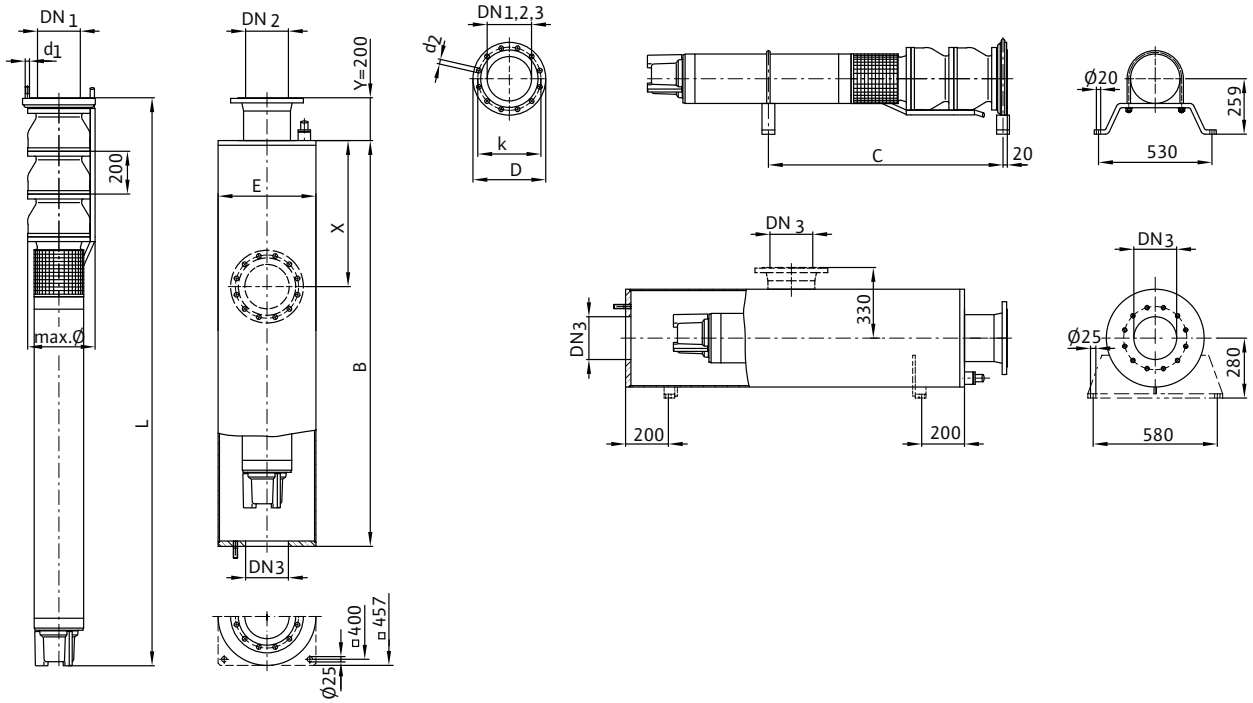

Dimensions, weights									
Wilo-EMU...	**Type of motor**	**Impeller diameter**	**Dimensions**					**Weight**	**Weight of unit**
			B	*C*	*E*	*L*	*ø* [3]	*Jacket*[7]	*m*
			mm					kg	
KM 750-1a	NU 801-2/68	209/199	1960	–	457	1805	340	237	259
KM 750-1a	NU 911-2/45	209/199	1940	1150	457	1790	359	237	322
KM 750S-1b	NU 801-2/60	205/195	1880	1110	457	1725	340	231	245
KM 750S-1c	NU 801-2/45	186/175	1730	1030	457	1575	348	221	219
KM 750S-1d	NU 801-2/40	181/169	1680	1010	457	1525	348	217	211
KM 750S-2a	NU 911-2/60	200/190	2290	1420	457	2140	350	260	403
KM 750S-2b	NU 911-2/50	194/184	2190	1370	457	2040	347	252	377
KM 750S-2c	NU 911-2/45	186/175	2140	1350	457	1990	359	249	363
KM 750S-2d	NU 911-2/45	181/169	2140	1350	457	1990	359	249	363

[3] For power cable in accordance with I_N (Y/Δ), max. ø for flange connection DN200
[7] Weight of pressure shroud

Flange dimensions, ordering information Wilo-EMU KM 750

Flange dimensions

Wilo-EMU...	Connection			Pressure class			Dimensions		
	DN1	*DN2*	*DN3*	*PN_1*	*PN_2*	*PN_3*	*D2*	*K*	*D*
	mm			bar			mm		
KM 750...	DN 200	–	–	10	–	–	8xM20	295	340
KM 750...	DN 200	–	–	16	–	–	12xM20	295	340
KM 750...	–	DN 200	DN 200	–	10	10	8x22	295	340
KM 750...	–	DN 200	–	–	16	–	12x22	295	340
KM 750...	–	–	DN 250	–	–	10	12x22	350	395
KM 750...	–	–	DN 300	–	–	10	12x22	400	445

Information for order placements

Wilo-EMU...	Type of motor	Cable cross-section	Fuse protection
			I
		mm^2	A
KM 750-1a	NU 801-2/68	7x1x16	125
KM 750-1a	NU 911-2/45	4G35 + 3x35	160
KM 750S-1b	NU 801-2/60	7x1x16	125
KM 750S-1c	NU 801-2/45	4G16 + 3x16	80
KM 750S-1d	NU 801-2/40	4G16 + 3x16	80
KM 750S-2a	NU 911-2/60	7x1x50	250
KM 750S-2b	NU 911-2/50	7x1x35	200
KM 750S-2c	NU 911-2/45	4G35 + 3x35	160
KM 750S-2d	NU 911-2/45	4G35 + 3x35	160

3) For power cable in accordance with I_N (Y/Δ), max. ø for flange connection DN200
7) Weight of pressure shroud

Ordering information for standard pumps

Wilo-EMU...	Type of motor	Activation type	Cable cross-section	Length of connecting cable	Fuse protection		Art no.
					I		
			mm^2	m	A		
KM 750S-2a	NU 911-2/60	Star-delta	7x1x50	25	250	L	**6065504**
KM 750S-2b	NU 911-2/50	Star-delta	7x1x35	25	200	L	**6065503**
KM 750S-2c	NU 911-2/45	Star-delta	4G35 + 3x35	25	160	L	**6065502**

Overview pump curve Wilo-EMU KM 1300

Overview pump curve Wilo-EMU KM 1300

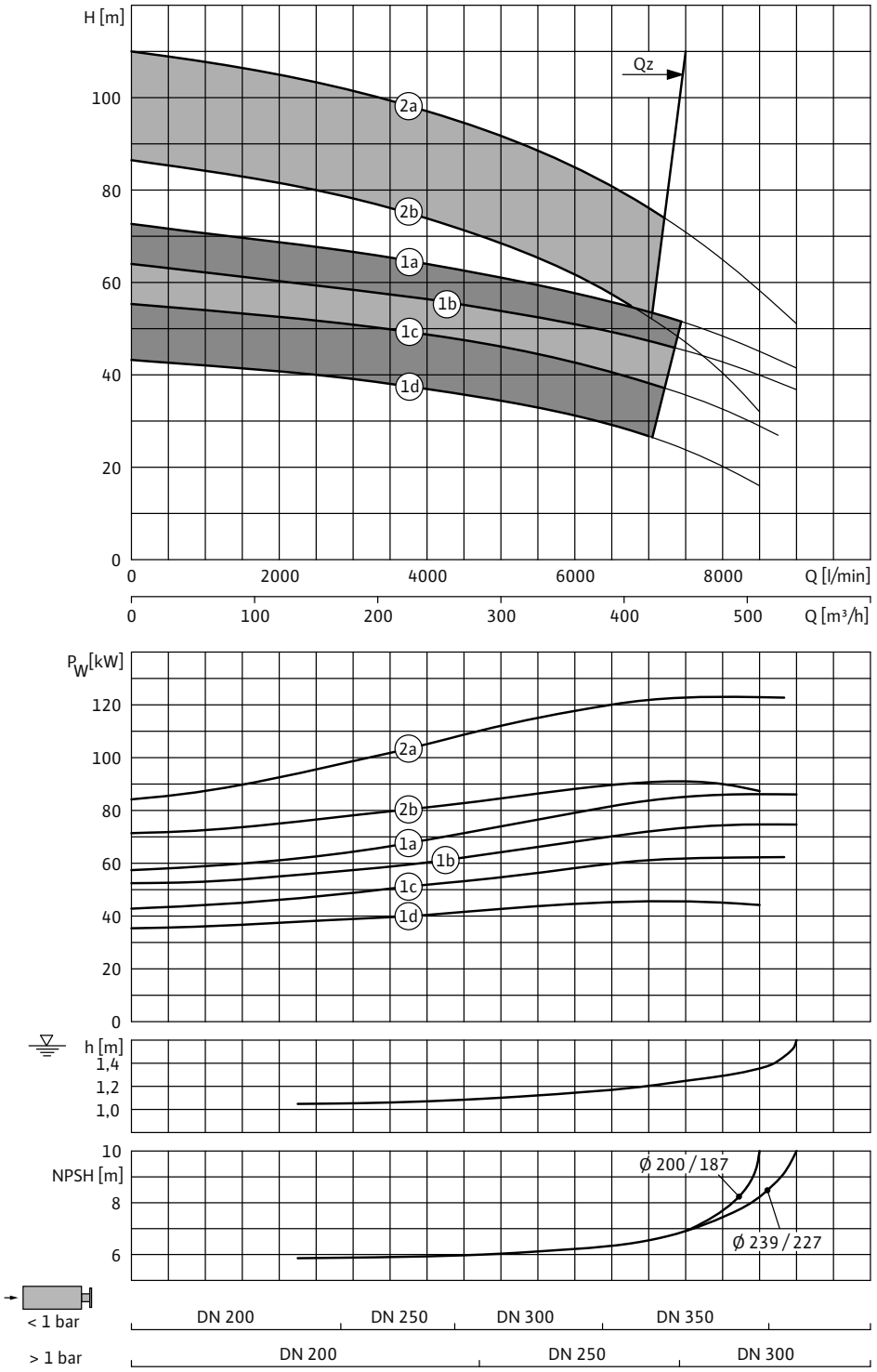

2a = KM 1300S-2a + NU 911-2/75
2b = KM 1300S-2b + NU 911-2/60

1a = KM 1300-1a + NU 911-2/60
1b = KM 1300S-1b + NU 911-2/50
1c = KM 1300S-1c + NU 911-2/45
1d = KM 1300S-1d + NU 801-2/60

3~400 V, 50 Hz, p = 1 kg/dm^3, v = 1x10^{-6} m^2/s, ISO 9906 Annex A

Pump curves, motor data Wilo-EMU KM 1300-1

Pump curves Wilo-EMU KM 1300-1

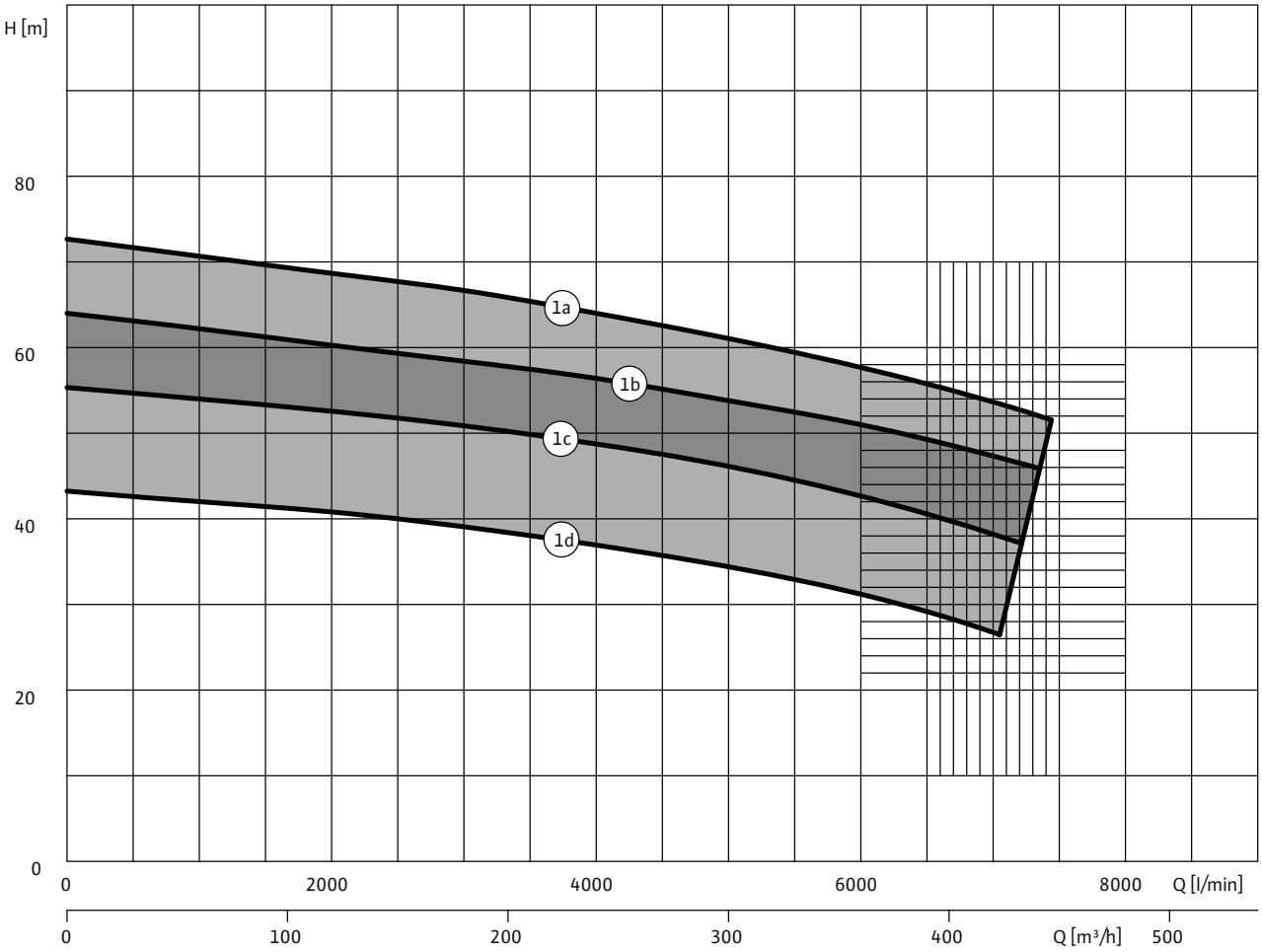

3~400 V, 50 Hz, p = 1 kg/dm^3, v = 1x10^{-6} m^2/s, ISO 9906 Annex A, η = pump efficiency

Motor data

Wilo-EMU...	Type of motor	Nominal motor power	Nominal current	Starting current - direct	Starting current - star-delta	Installation	Material code	
		P_2	I_N	I_A			A	C
		kW	A					
KM 1300-1a	NU 911-2/60	97	196	1280	430	V+H	•	•
KM 1300S-1b	NU 911-2/50	85	168	780	260	V+H	•	•
KM 1300S-1c	NU 911-2/45	70	141	700	235	V+H	•	•
KM 1300S-1d	NU 801-2/60	53	104	580	194	V+H	•	•

For star/delta starting, max. current peak during the switching phase; after reducing the compensatory processes and a switching phase of 80 ms. Please request a starting diagram when configuring power generators!

Pump curves, motor data Wilo-EMU KM 1300-2

Pump curves Wilo-EMU KM 1300-2

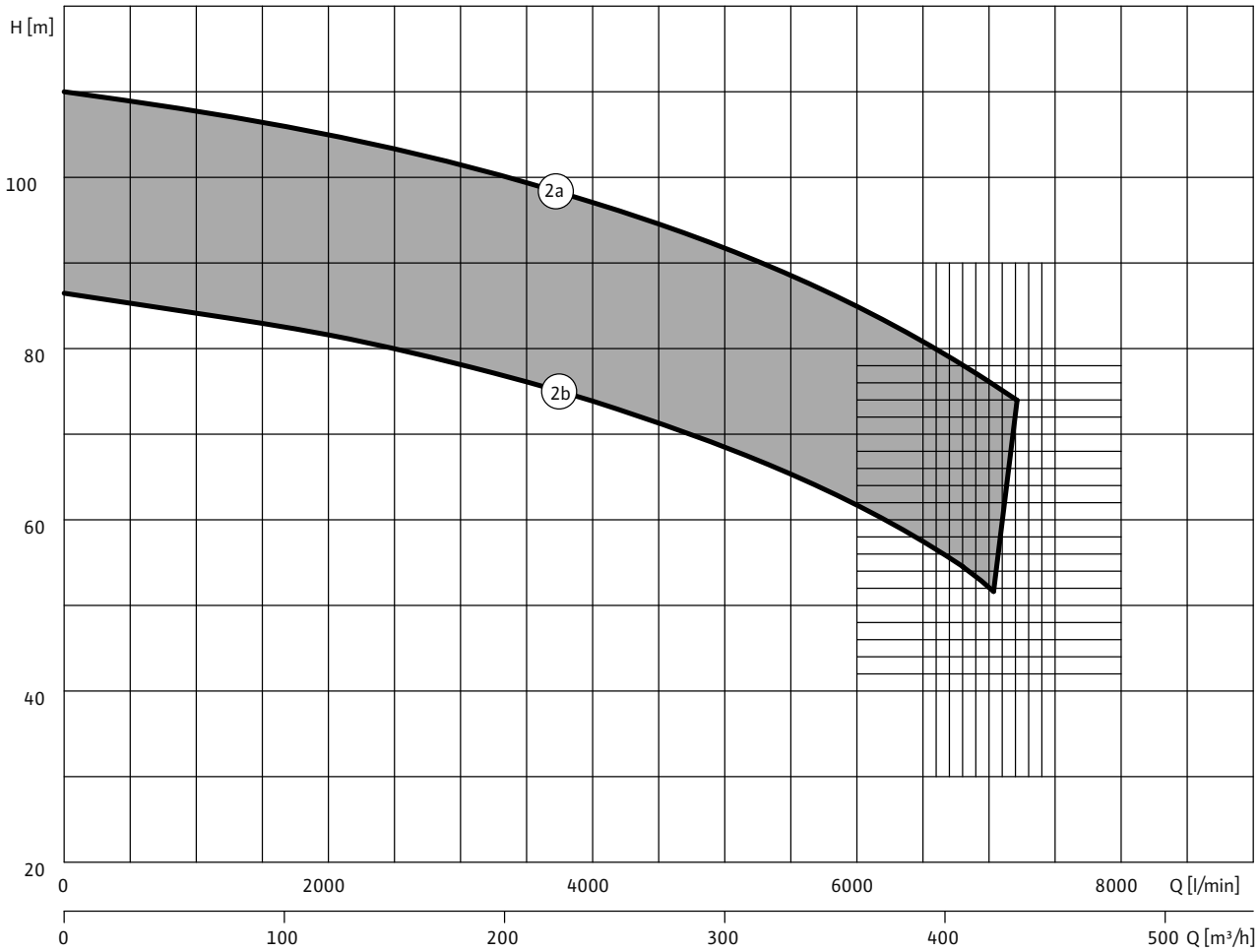

3~400 V, 50 Hz, p = 1 kg/dm^3, v = 1x10^{-6} m^2/s, ISO 9906 Annex A, η = pump efficiency

Motor data

Wilo-EMU...	Type of motor	Nominal motor power	Nominal current	Starting current - direct	Starting current - star-delta	Installation	Material code	
		P_2	I_N	I_A			A	C
		kW	A					
KM 1300S-2a	NU 911-2/75	137	265	1790	600	V+H	•	•
KM 1300S-2b	NU 911-2/60	105	210	1280	430	V+H	•	•

For star/delta starting, max. current peak during the switching phase; after reducing the compensatory processes and a switching phase of 80 ms. Please request a starting diagram when configuring power generators!

Dimensions, weights Wilo-EMU KM 1300

Dimension drawing

Wilo-EMU KM 1300

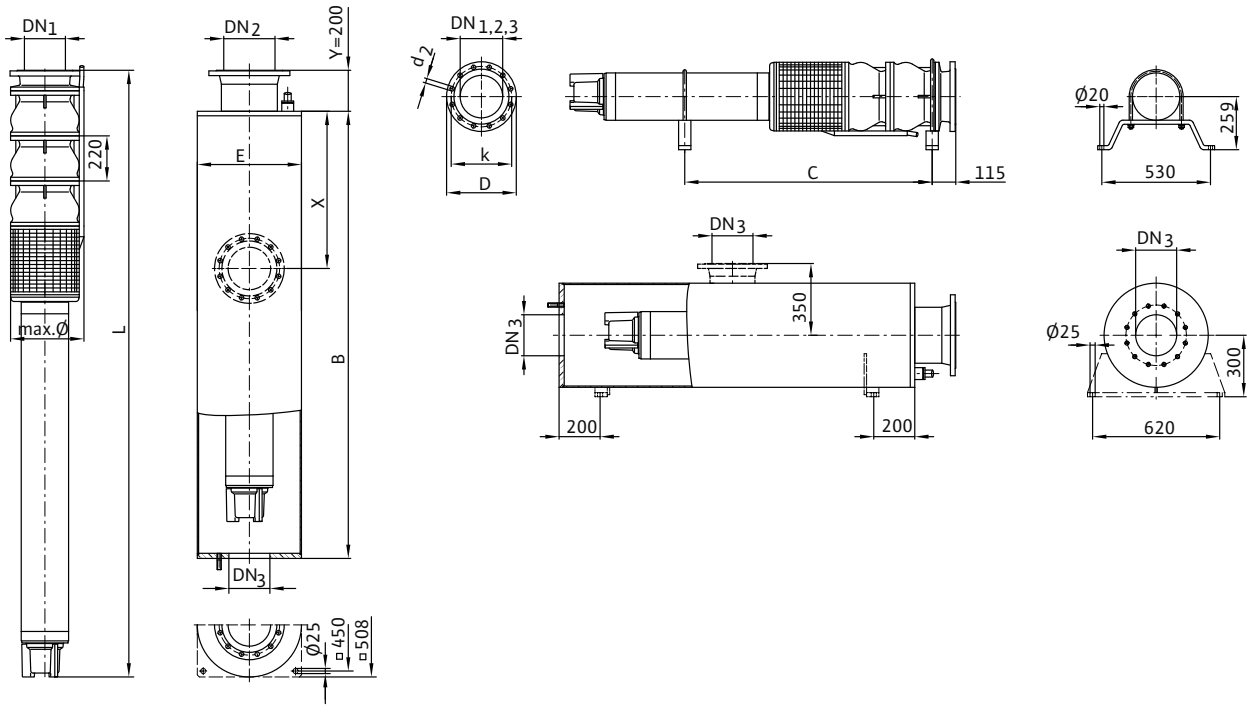

Dimensions, weights									
Wilo-EMU...	**Type of motor**	**Impeller diameter**	**Dimensions**					**Weight**	**Weight of unit**
			B	*C*	*E*	*L*	*ø* [3]	*Jacket*[7]	*m*
			mm					kg	
KM 1300-1a	NU 911-2/60	239/227	2240	1230	508	2040	364	267	405
KM 1300S-1b	NU 911-2/50	230/218	2140	1180	508	1940	364	260	379
KM 1300S-1c	NU 911-2/45	217/205	2090	1160	508	1890	386	255	365
KM 1300S-1d	NU 801-2/60	200/187	2030	1120	508	1825	358	251	288
KM 1300S-2a	NU 911-2/75	217/205	2610	1530	508	2410	366 [4]	296	507
KM 1300S-2b	NU 911-2/60	200/187	2460	1450	508	2260	366	284	468

[3] For power cable in accordance with I_N (Y/Δ), max. ø for flange connection DN200
[4] Star-delta switching: Fuse protection via U1V1W1/U2V2W2
[7] Weight of pressure shroud

Flange dimensions, ordering information Wilo-EMU KM 1300

Flange dimensions

Wilo-EMU...	Connection			Pressure class			Dimensions		
	DN1	*DN2*	*DN3*	*PN_1*	*PN_2*	*PN_3*	*D2*	*K*	*D*
	mm			bar			mm		
KM 1300...	DN 200	DN 200	DN 200	10	10	10	8x22	295	340
KM 1300...	DN 200	DN 200	–	16	16	–	12x22	295	340
KM 1300...	DN 250	DN 250	DN 250	10	10	10	12x22	350	395
KM 1300...	DN 250	DN 250	–	16	16	–	12x26	355	405
KM 1300...	–	–	DN 300	–	–	10	12x22	400	445
KM 1300...	–	–	DN 350	–	–	10	16x22	460	505

Information for order placements

Wilo-EMU...	Type of motor	Cable cross-section	Fuse protection
			I
		mm^2	A
KM 1300-1a	NU 911-2/60	7x1x50	250
KM 1300S-1b	NU 911-2/50	7x1x35	200
KM 1300S-1c	NU 911-2/45	4G35 + 3x35	160
KM 1300S-1d	NU 801-2/60	7x1x16	125
KM 1300S-2a	NU 911-2/75	7x1x50	200 [4)]
KM 1300S-2b	NU 911-2/60	7x1x50	250

[3)] For power cable in accordance with I_N (Y/Δ), max. ø for flange connection DN200
[4)] Star-delta switching: Fuse protection via U1V1W1/U2V2W2
[7)] Weight of pressure shroud

Ordering information for standard pumps

Wilo-EMU...	Type of motor	Activation type	Cable cross-section	Length of connecting cable	Fuse protection	🚚	Art no.
					I		
			mm^2	m	A		
KM 1300S-2a	NU 911-2/75	Star-delta	7x1x50	25	200 [4)]	L	**6065501**

Overview pump curve Wilo-EMU D 500

Overview pump curve Wilo-EMU D 500

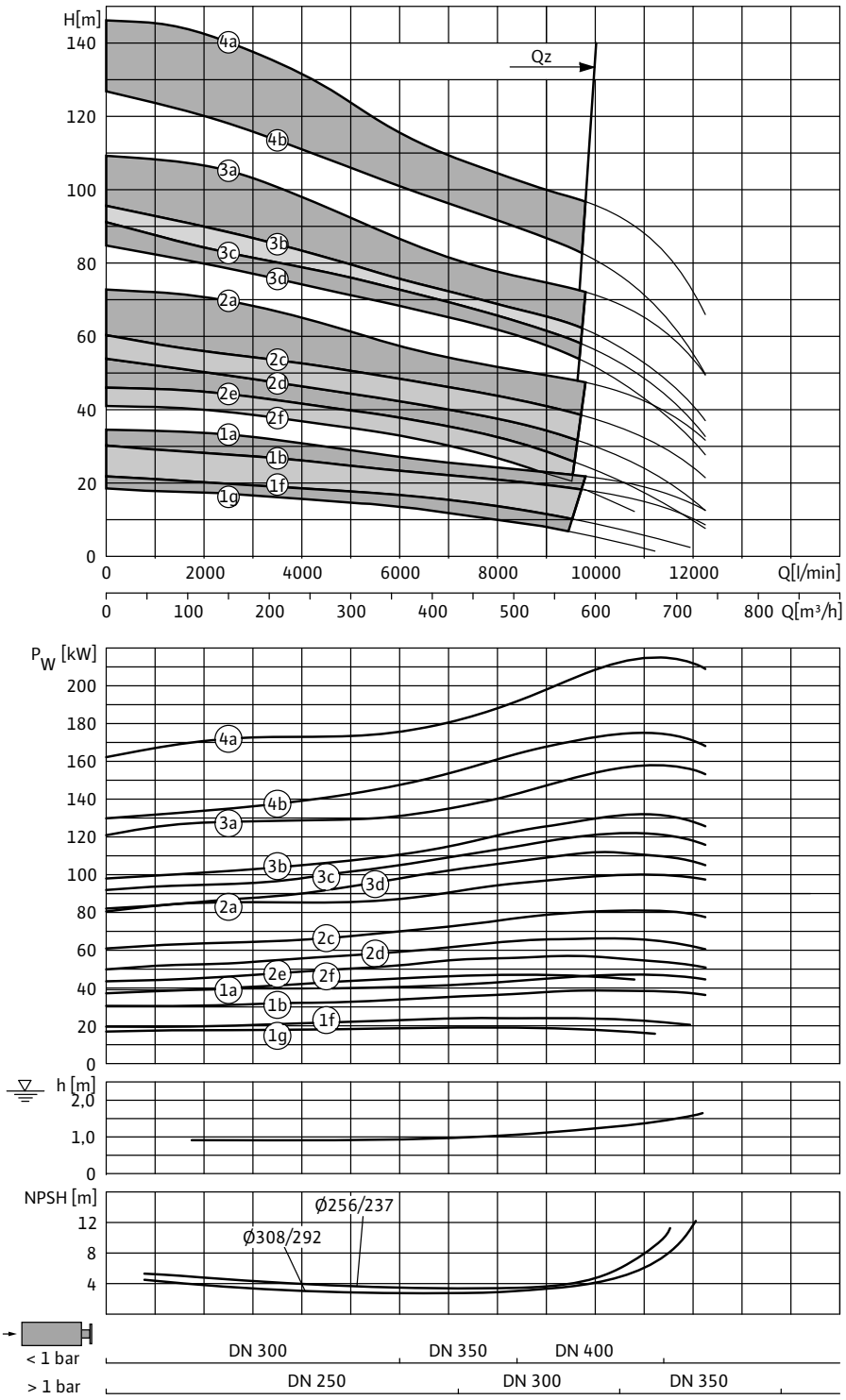

4a = D 500-4a + NU 160-4/105
4b = D 500S-4b + NU 160-4/90

3a = D 500-3a + NU 121-4/135
3a = D 500-3a + NU 160-4/90
3b = D 500S-3b + NU 121-4/110
3b = D 500S-3b + NU 160-4/75
3c = D 500S-3c + NU 121-4/100
3c = D 500S-3c + NU 160-4/60
3d = D 500S-3d + NU 121-4/90

2a = D 500-2a + NU 121-4/90
2c = D 500S-2c + NU 121-4/65
2d = D 500S-2d + NU 911-4/90
2e = D 500S-2e + NU 911-4/75
2f = D 500S-2f + NU 911-4/60

1a = D 500-1a + NU 911-4/60
1b = D 500S-1b + NU 911-4/50
1f = D 500S-1f + NU 801-4/68
1f = D 500S-1f + NU 911-4/50
1g = D 500S-1g + NU 801-4/55

3~400 V, 50 Hz, p = 1 kg/dm^3, v = 1x10^{-6} m^2/s, ISO 9906 Annex A

Pump curves, motor data Wilo-EMU D 500-1

Pump curves Wilo-EMU D 500-1

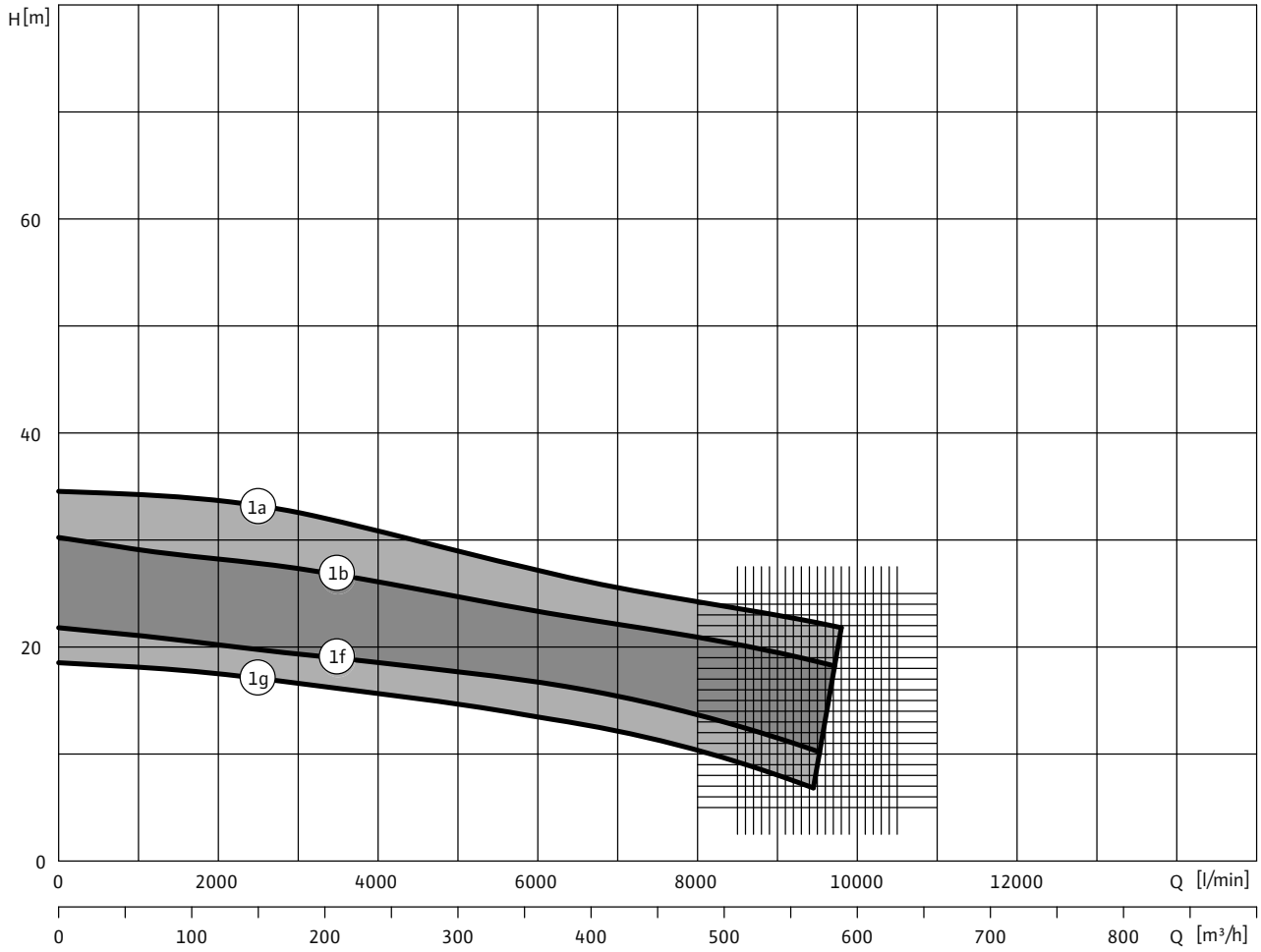

3~400 V, 50 Hz, p = 1 kg/dm^3, v = 1x10^{-6} m^2/s, ISO 9906 Annex A, η = pump efficiency

Motor data

Wilo-EMU...	Type of motor	Nominal motor power	Nominal current	Starting current - direct	Starting current - star-delta	Installation	Material code	
		P_2	I_N	I_A			A	C
		kW	A					
D 500-1a	NU 911-4/60	52	133	600	200	V+H	•	•
D 500S-1b	NU 911-4/50	42	106	490	164	V+H	•	•
D 500S-1f	NU 801-4/68	26	60	365	122	V	•	•
D 500S-1f	NU 911-4/50	42	106	490	164	V+H	•	•
D 500S-1g	NU 801-4/55	21	48	290	97	V+H	•	•

For star/delta starting, max. current peak during the switching phase; after reducing the compensatory processes and a switching phase of 80 ms. Please request a starting diagram when configuring power generators!

Pump curves, motor data Wilo-EMU D 500-2

Pump curves Wilo-EMU D 500-2

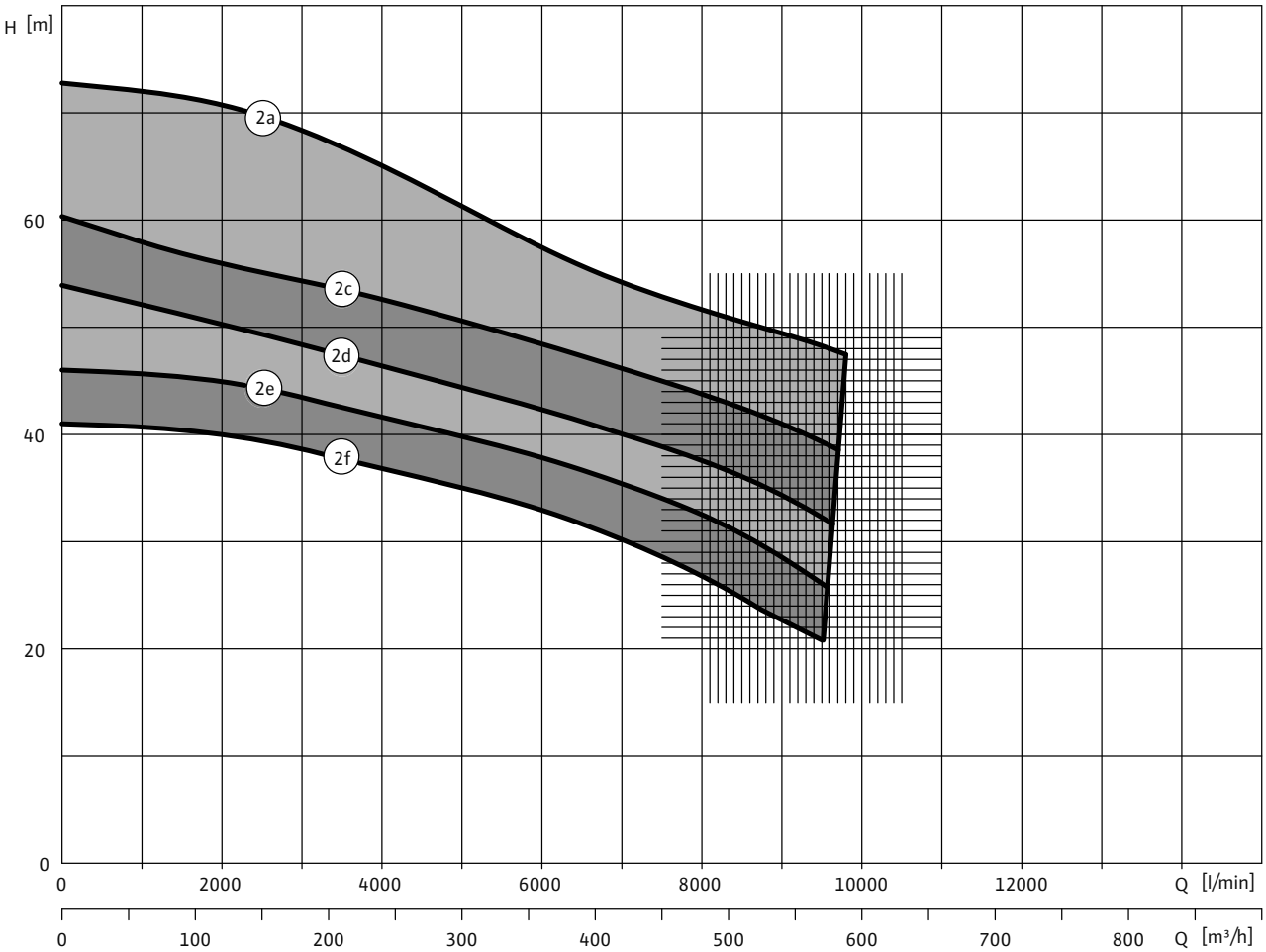

3~400 V, 50 Hz, p = 1 kg/dm^3, v = 1x10^{-6} m^2/s, ISO 9906 Annex A, η = pump efficiency

Motor data

Wilo-EMU...	Type of motor	Nominal motor power	Nominal current	Starting current - direct	Starting current - star-delta	Installation	Material code	
		P_2	I_N	I_A			A	C
		kW	A					
D 500-2a	NU 121-4/90	118	245	1380	460	V+H	•	•
D 500S-2c	NU 121-4/65	88	185	1000	335	V+H	•	•
D 500S-2d	NU 911-4/90	73	187	820	275	V+H	•	•
D 500S-2e	NU 911-4/75	62	156	700	235	V+H	•	•
D 500S-2f	NU 911-4/60	52	133	600	200	V+H	•	•

For star/delta starting, max. current peak during the switching phase; after reducing the compensatory processes and a switching phase of 80 ms. Please request a starting diagram when configuring power generators!

Pump curves, motor data Wilo-EMU D 500-3

Pump curves Wilo-EMU D 500-3

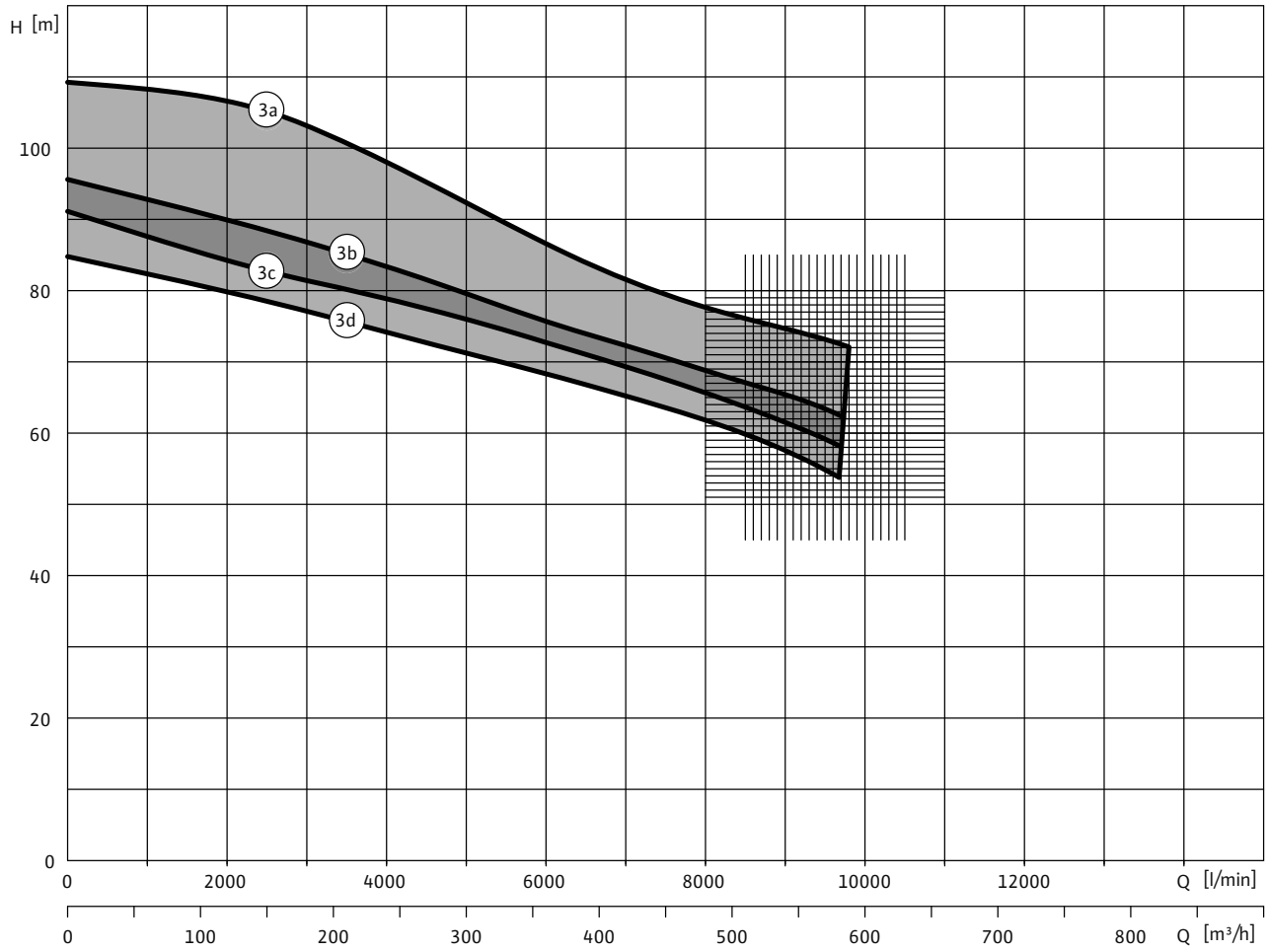

3~400 V, 50 Hz, p = 1 kg/dm^3, v = 1x10^{-6} m^2/s, ISO 9906 Annex A, η = pump efficiency

Motor data

Wilo-EMU...	Type of motor	Nominal motor power	Nominal current	Starting current - direct	Starting current - star-delta	Installation	Material code	
		P_2	I_N	I_A			A	C
		kW	A					
D 500-3a	NU 121-4/135	172	365	2000	670	V	•	•
D500-3a	NU 160-4/90	185	385	2570	860	V+H	•	•
D 500S-3b	NU 121-4/110	148	305	1700	570	V	•	•
D500S-3b	NU 160-4/75	148	310	2200	740	V+H	•	•
D 500S-3c	NU 121-4/100	133	290	1560	520	V	•	•
D500S-3c	NU 160-4/60	129	270	1750	590	V+H	•	•
D 500S-3d	NU 121-4/90	118	245	1380	460	V+H	•	•

For star/delta starting, max. current peak during the switching phase; after reducing the compensatory processes and a switching phase of 80 ms. Please request a starting diagram when configuring power generators!

Pump curves, motor data Wilo-EMU D 500-4

Pump curves Wilo-EMU D 500-4

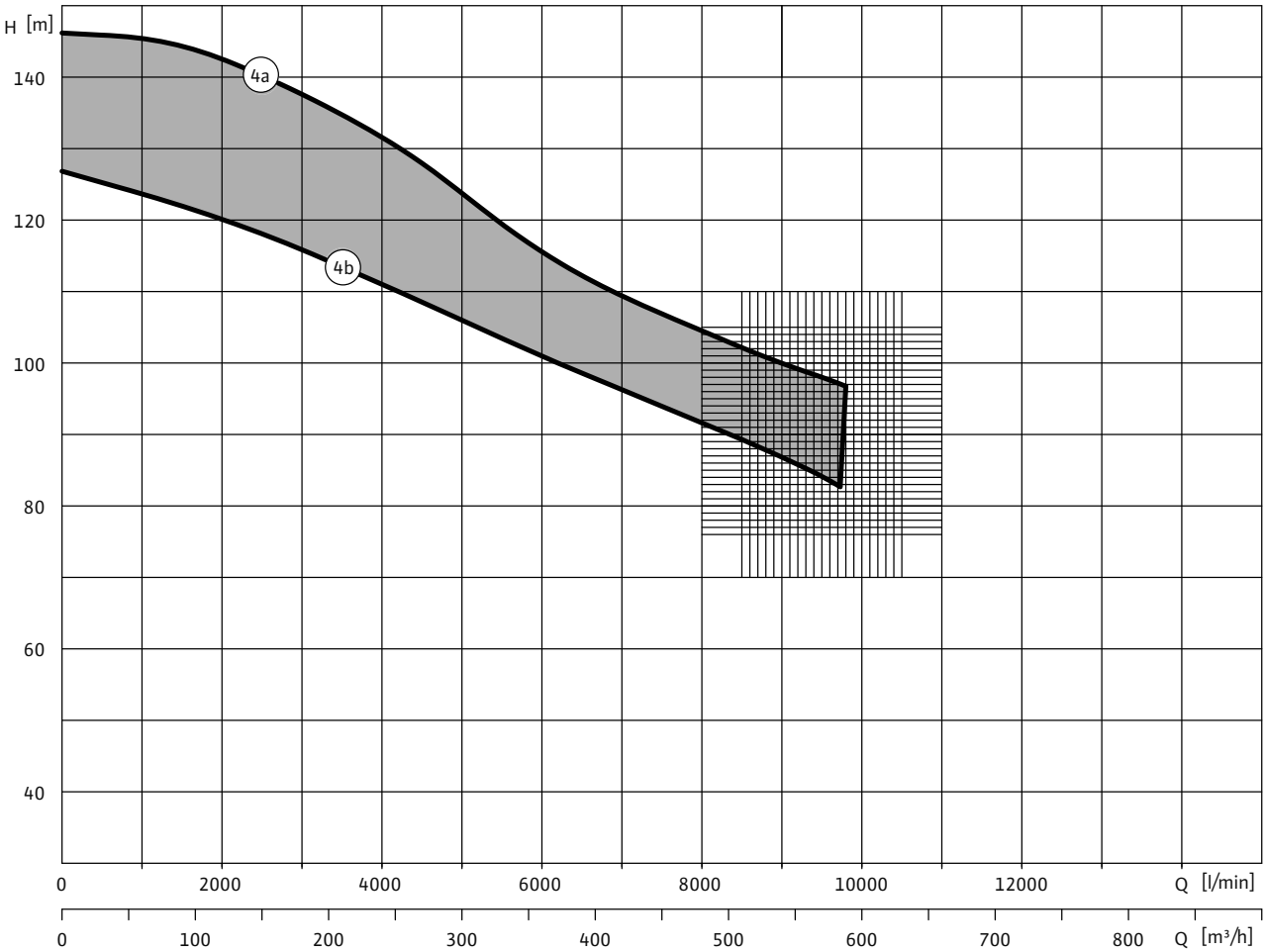

3~400 V, 50 Hz, p = 1 kg/dm^3, v = 1x10^{-6} m^2/s, ISO 9906 Annex A, η = pump efficiency

Motor data

Wilo-EMU...	Type of motor	Nominal motor power	Nominal current	Starting current - direct	Starting current - star-delta	Installation	Material code	
		P_2	I_N	I_A			A	C
		kW	A					
D500-4a	NU 160-4/105	235	485	3100	1040	V+H	•	•
D500S-4b	NU 160-4/90	185	385	2570	860	V+H	•	•

For star/delta starting, max. current peak during the switching phase; after reducing the compensatory processes and a switching phase of 80 ms. Please request a starting diagram when configuring power generators!

Dimensions, weights Wilo-EMU D 500

Dimension drawing

Wilo-EMU D 500

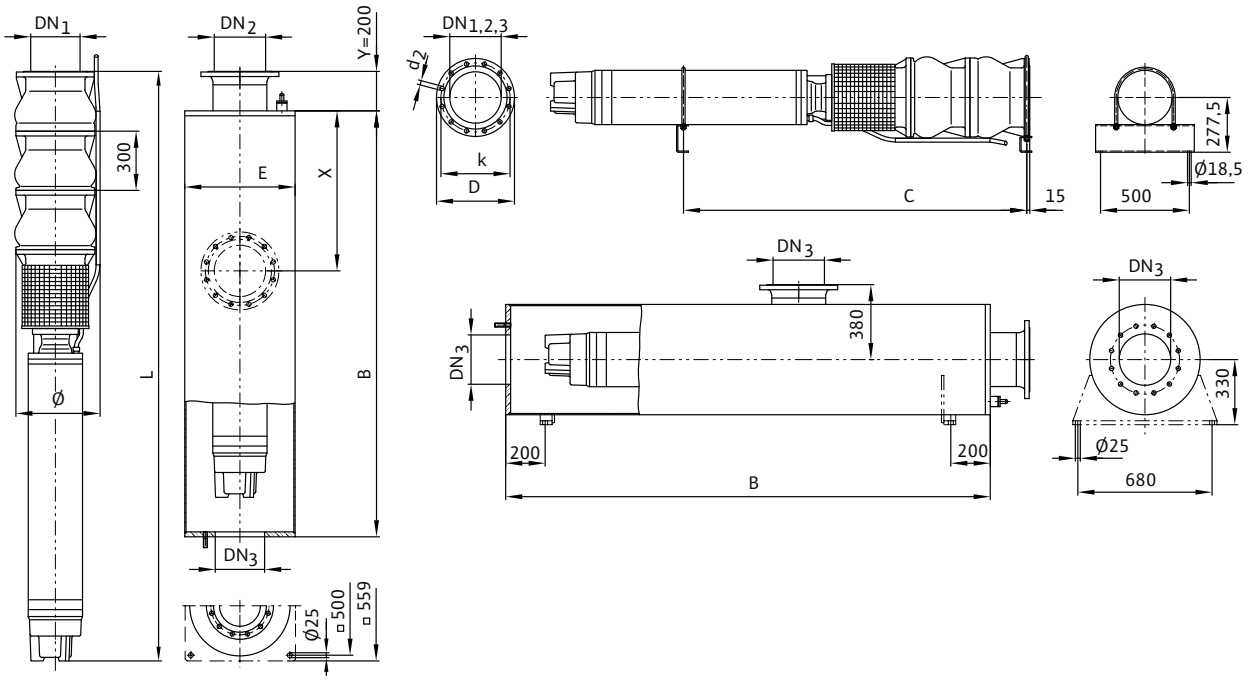

Dimensions, weights

Wilo-EMU...	Type of motor	Impeller diameter	Dimensions					Weight	Weight of unit
			B	*C*	*E*	*L*	*ø* [3]	*Jacket*[7]	*m*
			mm					kg	
D 500-1a	NU 911-4/60	308/292	2370	1400	559	2113	460	345	460
D 500S-1b	NU 911-4/50	300/284	2270	1350	559	2013	432	336	434
D 500S-1f	NU 801-4/68	270/252	2230	–	559	1978	448	333	358
D 500S-1f	NU 911-4/50	270/252	2270	1350	559	2013	432	336	434
D 500S-1g	NU 801-4/55	256/237	2100	1260	559	1848	442	323	336
D 500-2a	NU 121-4/90	308/292	3190	1960	559	2933	465	415	890
D 500S-2c	NU 121-4/65	295/278	2940	1840	559	2683	454	394	800
D 500S-2d	NU 911-4/90	290/273	2970	1850	559	2713	460	397	648
D 500S-2e	NU 911-4/75	280/262	2820	1770	559	2563	439	384	609
D 500S-2f	NU 911-4/60	270/252	2670	1700	559	2413	460	371	570
D 500-3a	NU 121-4/135	308/292	3940	–	559	3687	472	481	1191
D 500-3a	NU 160-4/90	308/292	3700	2370	559	3440	458 [1]	459	1484
D 500S-3b	NU 121-4/110	300/284	3690	–	559	3433	464	459	1070
D 500S-3b	NU 160-4/75	300/284	3480	2260	559	3226	444 [1]	441	1372
D 500S-3c	NU 121-4/100	295/278	3590	–	559	3333	464	450	1035
D 500S-3c	NU 160-4/60	295/278	3330	2190	559	3076	440 [1]	425	1267
D 500S-3d	NU 121-4/90	290/273	3490	2260	559	3233	464	441	1000
D 500-4a	NU 160-4/105	308/292	4140	2750	559	3890	464 [1]	498	1698
D 500S-4b	NU 160-4/90	300/284	3990	2680	559	3740	458 [1]	491	1594

[1] ATTENTION: For NU 160 no star triangle starting possible
[3] For power cable in accordance with I_N (Y/Δ), max. ø for flange connection DN200
[7] Weight of pressure shroud

Flange dimensions, ordering information Wilo-EMU D 500

Flange dimensions

Wilo-EMU...	Connection			Pressure class			Dimensions		
	DN1	*DN2*	*DN3*	*PN_1*	*PN_2*	*PN_3*	*D2*	*K*	*D*
	mm			bar			mm		
D 500...	DN 250	DN 250	DN 250	10	10	10	12x22	350	395
D 500...	DN 250	DN 250	–	16	16	–	12x26	355	405
D 500...	–	–	DN 300	–	–	10	12x22	400	445
D 500...	–	–	DN 350	–	–	10	16x22	460	505
D 500...	–	–	DN 400	–	–	10	16x26	515	565

Information for order placements

Wilo-EMU...	Type of motor	Cable cross-section	Fuse protection
			I
		mm^2	A
D 500-1a	NU 911-4/60	4G35 + 3x35	160
D 500S-1b	NU 911-4/50	7x1x16	125
D 500S-1f	NU 801-4/68	4G16 + 3x16	80
D 500S-1f	NU 911-4/50	7x1x16	125
D 500S-1g	NU 801-4/55	4G10 + 3x10	63
D 500-2a	NU 121-4/90	7x1x70	315
D 500S-2c	NU 121-4/65	7x1x35	224
D 500S-2d	NU 911-4/90	4G35 + 3x35	224
D 500S-2e	NU 911-4/75	7x1x35	200
D 500S-2f	NU 911-4/60	4G35 + 3x35	160
D 500-3a	NU 121-4/135	7x1x120	500
D 500-3a	NU 160-4/90	7x1x50[1)]	500 [1)]
D 500S-3b	NU 121-4/110	7x1x70	355
D 500S-3b	NU 160-4/75	4x1x120	500 [1)]
D 500S-3c	NU 121-4/100	7x1x70	355
D 500S-3c	NU 160-4/60	7x1x50[1)]	500 [1)]
D 500S-3d	NU 121-4/90	7x1x70	315
D 500-4a	NU 160-4/105	7x1x70[1)]	630 [1)]
D 500S-4b	NU 160-4/90	7x1x50[1)]	500 [1)]

[1)] ATTENTION: For NU 160 no star triangle starting possible
[3)] For power cable in accordance with I_N (Y/Δ), max. ø for flange connection DN200
[7)] Weight of pressure shroud

Mechanical accessories for Wilo tank for fire fighting systems (FLA)

Wilo break tank for fire fighting systems (FLA) in accordance with DIN 14462

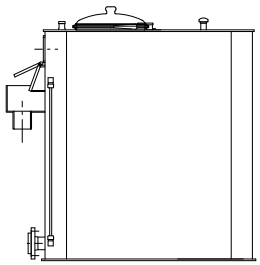

Application
Atmospherically vented break tank in accordance with DIN 14462 for the indirect connection of fire extinguishing systems in accordance with DIN 1988-6 to the public potable water supply
System separation by means of safety device in accordance with EN 13077, free drain, type AB in accordance with DIN EN 1717
When using, please observe DIN 1988 - 6 and the regulations of the local water-supply companies.

Scope of delivery
PE tank, round or rectangular construction, with water level indicator
- Drain
- Float switch as signal transmitter to protect against low water level
- Ventilation and exhaust with strainer insert
- Inspection opening with cover that can be sealed without tools
- Inner wash plates for slowing down the fluid
- Inlet, draw-off connection
- Overflow as free drain, type AB in accordance with DIN EN 1717
- With non-circular cross-section

Permitted fluid: pure water
Fluid temperature: max. 40 °C
Tank material: PE, completely safe in compliance with all legislation relating to food safety

Installation location/notes on installation
- Flat, horizontal, frost-resisting
- Provide sufficient space for inspection
- In accordance with DIN 1988 (EN 806)

Important:
Onsite connecting lines must be connected so that they are not weight-loaded and stress-free.

Accessories (to be ordered separately)
Float valve(s) corresponding to the nominal inlet width of the tank

Mechanical accessories for Wilo tank for fire fighting systems (FLA)

Dimension drawing

600 litres, round

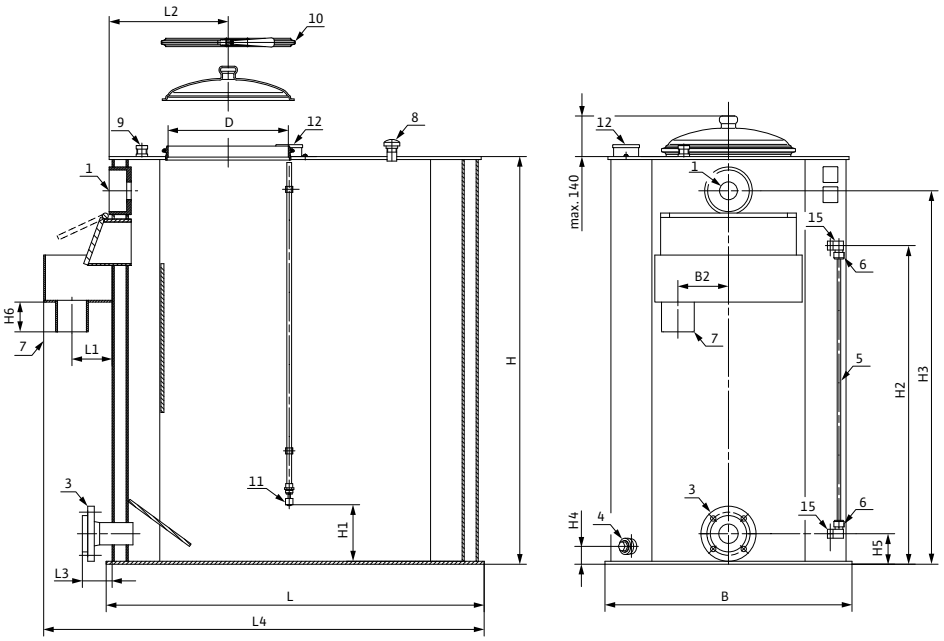

1 Drilled hole for float valve
3 Draw-off connection
4 Evacuation connection
5 Water level indicator clear-view tube
6 Water level indicator screwed connection
7 Overflow
8 Ventilation and exhaust
9 Flush connection
10 Cover with locking ring for inspection opening
11 Low water float switch
12 Connection socket for float switch
15 Moulded part connection water level indicator

Dimension drawing

800 to 1000 litres, rectangular

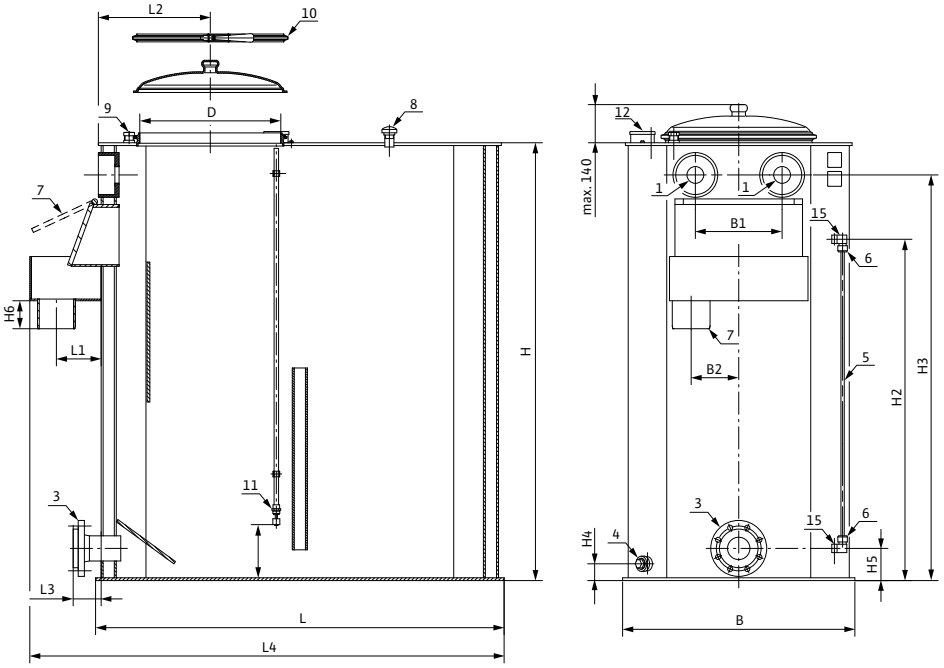

1 Drilled hole for float valve
3 Draw-off connection
4 Evacuation connection
5 Water level indicator clear-view tube
6 Water level indicator screwed connection
7 Overflow
8 Ventilation and exhaust
9 Flush connection
10 Cover with locking ring for inspection opening
11 Low water float switch
12 Connection socket for float switch
15 Moulded part connection water level indicator

Mechanical accessories for Wilo tank for fire fighting systems (FLA)

Dimension drawing

1500 to 3000 litres, rectangular

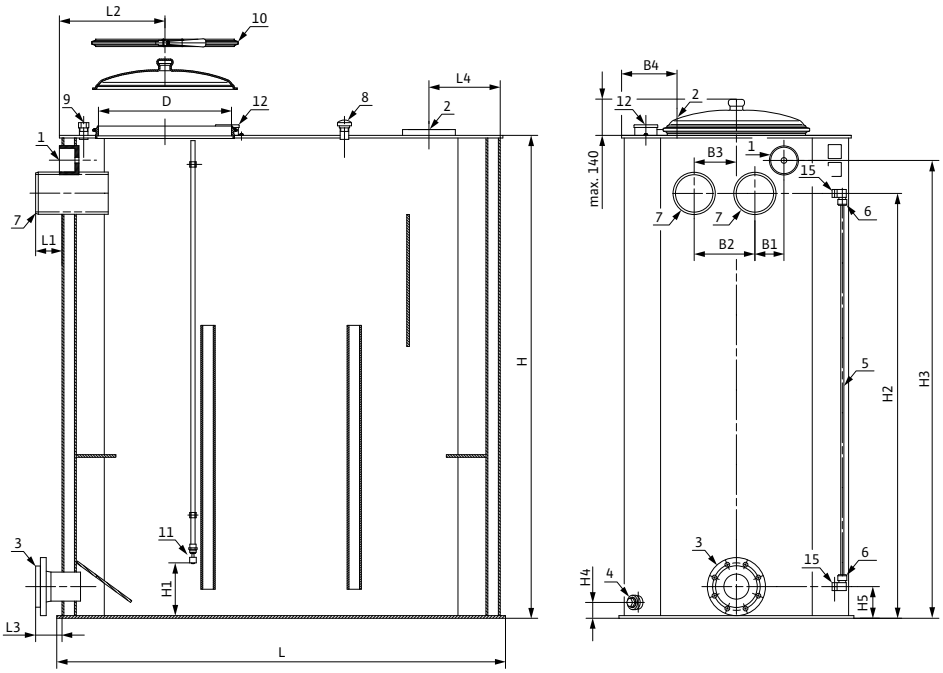

1 Drilled hole for float valve
2 Flange connection for inlet (diaphragm valve)
3 Draw-off connection
4 Evacuation connection
5 Water level indicator clear-view tube
6 Water level indicator screwed connection
7 Overflow
8 Ventilation and exhaust
9 Flush connection
10 Cover with locking ring for inspection opening
11 Low water float switch
12 Connection socket for float switch
15 Moulded part connection water level indicator

Dimensions, weights

Tank contents	Dimensions															
	B	*B1*	*B2*	*D*	*H*	*H1*	*H2*	*H3*	*H4*	*H5*	*H6*	*L*	*L1*	*L2*	*L3*	*L4*
	mm															
600	830	–	170	504	1370	190	1070	1255	60	102	100	1230	135	400	100	1480
800	830	310	170	504	1565	190	1220	1450	60	115	100	1460	160	400	100	1695
1000	830	310	170	504	1790	200	1445	1675	60	120	100	1460	160	400	100	1695
1500	890	310	170	504	1830	200	1610	1715	60	120	100	1700	160	400	100	1935
2000	890	310	170	504	1830	200	1610	1715	60	120	100	2215	160	400	100	2450
3000	1030	310	170	504	1830	200	1610	1715	60	120	100	2740	160	400	100	2975

Dimensions, weights

Tank contents	Inlet	Extraction	Flush connection	Overflow	Evacuation connection	Weight approx.
						m
						kg
600	60	DN 65	G 1	1 x HT 100	G 1	132
800	2 x 60	DN 80	G 1	1 x HT 125	G 1	145
1000	2 x 60	DN 100/PN 10	G $1^1/_4$	1 x HT 125	G 1	160
1500	2 x 60	DN 100/PN 10	G $1^1/_4$	1 x HT 125	G 1	184
2000	2 x 60	DN 100/PN 10	G $1^1/_4$	1 x HT 125	G 1	220
3000	2 x 60	DN 100/PN 10	G $1^1/_4$	1 x HT 125	G 1	271

Mechanical accessories for Wilo tank for fire fighting systems (FLA)

Dimension drawing

600 litres, round

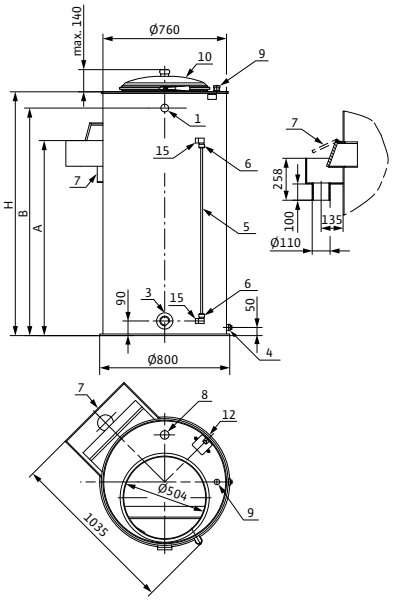

1 Drilled hole for float valve
3 Draw-off connection
4 Evacuation connection
5 Water level indicator clear-view tube
6 Water level indicator screwed connection
7 Overflow
8 Ventilation and exhaust
9 Flush connection
10 Cover with locking ring for inspection opening
12 Connection socket for float switch
15 Moulded part connection water level indicator

Dimension drawing

800 to 1000 litres, round

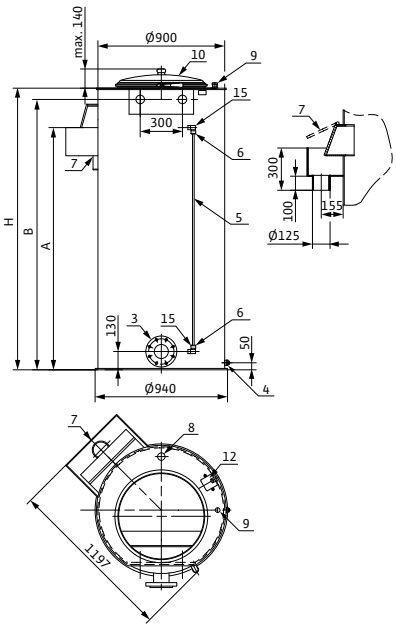

1 Drilled hole for float valve
3 Draw-off connection
4 Evacuation connection
5 Water level indicator clear-view tube
6 Water level indicator screwed connection
7 Overflow
8 Ventilation and exhaust
9 Flush connection
10 Cover with locking ring for inspection opening
12 Connection socket for float switch
15 Moulded part connection water level indicator

Dimensions, weights

Tank contents	Dimensions			Inlet	Extraction	Flush connection	Overflow	Evacuation connection	Weight approx.
	A	*B*	*H*						*m*
	mm								kg
600	1400	1600	1700	60	Rp 2	G 1	1 x HT 100	G $^1/_2$	61
800	1470	1670	1750	60	DN 80	G $1^1/_4$	1 x HT 125	G $^1/_2$	79
1000	1720	1920	2000	60	DN 100/PN 10	G $1^1/_4$	1 x HT 125	G $^1/_2$	86

Mechanical accessories Wilo flushing apparatus kit

Wilo flushing device kit in accordance with DIN 1988-6

No illustration available

Application
Used to prevent stagnating water
in the supply line to the FLA tank

Scope of delivery
Flushing apparatus kit consisting of:
- Solenoid valve Ms, normally closed,
1~230V/50Hz, diaphragm and gasket EPDM
- Approximately 2 m connecting cable with earthed plug
- Digital timer switchgear, 1~230Vz, 16 A

Principle of operation
If adequate water replacement is not guaranteed in the connection line to the
FLA break tank by features of the structural design,
this kit can be used to flush this line automatically

Technical data, Wilo flushing apparatus kit

Nominal diameter [Rp]	k_v	Supply pressure [bar]						Weight approx.
		1	2	3	4	5	6	
	[m³/h]	Flow rate [m³/h]						[kg]
½"	3.6	3.6	5.09	6.23	7.2	8.05	8.81	10
1"	8.3	8.3	11.73	14.37	16.6	18.55	20.32	15
1¼"	11	11	15.55	19.04	22	24.58	26.93	26

Mechanical accessories

Float valve

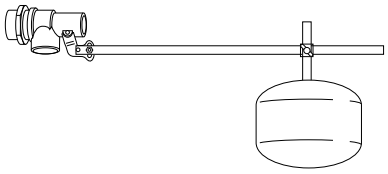

Float valve for use in open tanks with up to 1000 l useable volume for level control. Float valve R ½ as control valve in conjunction with diaphragm valve.

Technical data

Approved medium:	water without abrasive materials
Fluid temperature:	Max. 50 °C
Inlet pressure:	Max. 5 bar

Materials

Housing:	Brass
Control rod:	Stainless steel
Float:	Plastic

Volume flow rates, weights

Nominal diameter	Weight	Supply pressure				
		1 bar	2 bar	3 bar	4 bar	5 bar
	[kg]	[m³/h]				
R ½	1.4	2.1	3.0	3.6	4.2	4.7
R 1½	3.5	13.5	19.0	23.0	27.0	30.0
R 2	4.9	17.4	24.6	30.0	34.8	38.9

Diaphragm valve

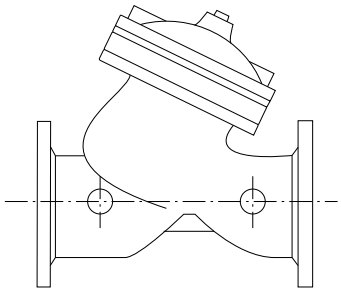

Diaphragm valve for use for level control in open tanks with a useable volume up to 1500 l in conjunction with a float valve R ½ as control valve

Technical data

Approved medium:	Water without abrasive materials
Fluid temperature:	Max. 90 °C
Inlet pressure:	Min. 0.8 bar / max. 16 bar

Materials

Housing:	Grey cast iron, plastic-coated on the outside and inside
Control rod:	Stainless steel

Volume flow rates, weights

Nominal diameter	Weight	Supply pressure				
	–	1 bar	2 bar	3 bar	4 bar	5 bar
	[kg]	[m³/h]				
DN 65	10	55	78	95	110	123
DN 80	24	90	126	154	180	200
DN 100	38	144	200	250	300	320
DN 125	68	250	350	430	500	540

Mechanical accessories

Flexible connection line

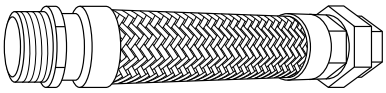

> **Application:**
The flexible connecting line ensures that the systems are connected stress-free.
Materials of hose and screwed connection: 1.4541
Materials, braiding: 1.4301
Connection:

R 1 ½/R_p 1½	Length: 400 mm
R 2/R_p 2	Length: 400 mm
R 2½/R_p 2½	Length: 400 mm

Permissible bend angle: max. 8°
PN 16

Low-water cut-out switchgear

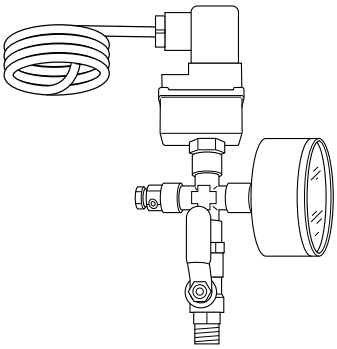

As low-water protection for direct connection.

Principle of operation
Admission pressure switch locks at 1.0 bar and enables at 1.3 bar (factory works setting in accordance with DIN 1988 (EN 806)). The factory settings cannot be modified.

Scope of delivery
- Pressure switch incl. plug and approx. 1.2 m cable
- T-piece R ¼
- Reducer R ¾ – ¼
- Pressure gauge
- Sealing material

Rubber compensator

No illustration available

> **Application:**
For reducing vibrations.

> **Scope of delivery:**
With loose flanges and sound-absorbing bedded external bracing

Working temperature max. 90 °C.
Lateral expansion 15 mm, overall length 130 mm, flange PN 16, sizes DN40-DN250

V4A stainless steel compensator

No illustration available

> **Application:**
For reducing vibrations.

> **Scope of delivery:**
With loose flanges and sound-absorbing bedded external bracing.

Working temperature max. 120 °C.
(with damper discs made of steel: up to 200 °C)
Overall length 130 mm, flange PN 16, sizes DN40-DN250

Mechanical accessories

Threaded cap

No illustration available

> **Application:**
For compensators and distributor/collector pipe.

In accordance with DIN 2566, PN 16, thread in accordance with DIN 2999
- Stainless steel 1.4571 or galvanised steel.
- DN 40, 50, 65, 80

Threaded flange

No illustration available

> **Application:**
For sealing one side of suction and pressure pipes to pressure boosting systems.
Material: Stainless steel 1.4571
- Rp 1½, 2. 2½, 3

Foot valve

No illustration available

Foot valve with integrated non-return valve.

- Red brass
- Strainer made of 1.4301 stainless steel
- Rp 1¼, 1½, 2. 2½, 3

Mechanical accessories for Wilo tank for fire fighting systems (FLA)

Pressure shroud

The submersible pumps can be installed in a pressure shroud for the purpose of pressure boosting. This makes it possible to install the unit in a tank or directly in the pipe itself (similar to dry well installation).

Pressure shroud pumps can be installed vertically and, up to a certain number of stages, also horizontally. The connections for the pipe system can be attached axially or laterally. The connections are also available as flanged or threaded connections. The design of the pressure shroud has been standardised up to a size of 8". Individual designs are available in sizes of 10" and higher. The pressure shrouds can be equipped with a pedestal on request. One has a choice between galvanised steel and stainless steel as the material.

Cooling jacket pipes

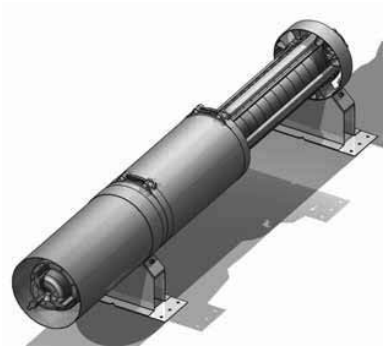

To achieve the flow rate required to cool the motor, submersible pumps can be equipped with a cooling jacket pipe. This is recommended in the following cases:

- If sludge deposits could form on the motor (e.g. with applications in a pump sump directly above the ground)
- Improved motor cooling is required due to unusual operating conditions
- If there is no unperforated well casing in the well and the pump needs to be installed in the filtration pipe system
- If there is sand in the well
- Installation is performed in rock springs without piping.

Cooling jacket pipes are suitable for vertical and horizontal installation. One has a choice between galvanised steel and stainless steel as the material (depending on the type). Availability and order number can be found in the catalogue pages for the respective type.

Anti-vortex plate

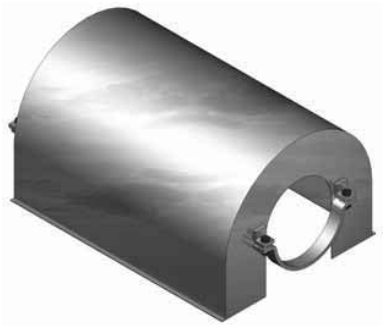

The anti-vortex plate is fastened in the inflow area of the submersible pump, thus preventing air turbulence during operation. Due to the use of an anti-vortex plate, the fluid is pumped to the unit in a defined manner. As a result, the required minimum submersion in water can be minimised and the tank can be better used.

The anti-vortex plate is made specifically in terms of size and design for each type of unit. One has a choice between galvanised steel and stainless steel as the material. Availability, materials used and order number can be found in the catalogue pages for the respective type.

Mechanical accessories

Non-return valves RV, RVF

Non-return valves prevent backward volume flow and thus the emptying of the ascending pipe, the reverse running of the switched-off submersible pump and any potential blocking of the pump by the trickling backward of solid matter. In addition, any water hammers that may occur as the result of reverse oscillations in the volume flow after switching off the pump are reduced.

The non-return valve is installed on the pressure port of the submersible pump and, in the case of larger systems, also downstream of the elbow in the ascending pipe. Non-return valves are available in the following versions:

- Normal version with shutter or cover, not spring-mounted (non-return valve)
- Spring-mounted version (RVF)
- Non-return nozzle valve

We recommend the use of spring-mounted non-return valves (RVF) or non-return nozzle valves where there is a risk of water hammers.

With the versions with non-return valve, the housings are available in grey cast iron or, on request, in zinc-free bronze. Flange connection in accordance with DIN 2501; threaded connection in accordance with Whitworth pipe thread DIN 2999 or B.S.2779

Non-return nozzle valves are available with nominal diameters of DN80 to DN300 and in the pressure stages PN10 to PN40. The materials used include stainless steel, bronze and elastomer parts (KTW-approved).

Bearing brackets for horizontal installation

Bearing brackets are used for supporting the horizontal installation of submersible pumps. These are to be made specifically in terms of size and design for each type of unit. One has a choice between galvanised steel and stainless steel as the material.

Availability, materials used and order number can be found in the catalogue pages for the respective type.

Raw water intake

Single pumps

Series overview

Series	**Wilo-Sub TWU 3**	**Wilo-Sub TWU 3 HS**	**Wilo-Sub TWU 4**
Product photo			
Duty chart	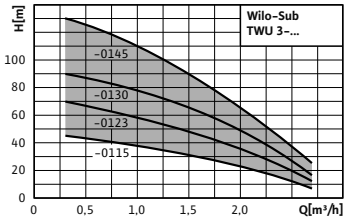	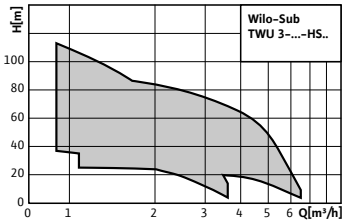	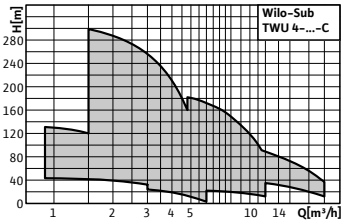
Design	Submersible pump, multistage	Submersible pump, multistage	Submersible pump, multistage
Application	• For private water supply from boreholes, wells and rainwater storage tanks • For domestic water supply, sprinkling and irrigation • For pumping water without long-fibre and abrasive constituents	• For private water supply from boreholes, wells and rainwater storage tanks • For domestic water supply, sprinkling and irrigation • For pumping water without long-fibre and abrasive constituents	• For water supply from boreholes and rainwater storage tanks • For domestic water supply, sprinkling and irrigation • Pressure boosting • Lowering the water level • For pumping water without long-fibre and abrasive constituents
H_{max}	130 m	96 m	322 m
Q_{max}	2.6 m^3/h	6.5 m^3/h	22 m^3/h
Special features/ product advantages	• Rewindable motor • Integrated non-return valve • Parts that come in contact with fluids are corrosion-free • Pump connection head and flange made of stainless steel • Vertical and horizontal installation possible • Single-phase version with starting capacitor and On/Off switch	• Expanded flow capacity by increased rotation speed (up to 8400 rpm) • Rewindable motor • Integrated non-return valve • Parts that come in contact with fluids are corrosion-free • Including frequency converter (HS-E...: external, installed in the piping; HS-I...: built into the motor) • Vertical and horizontal installation possible	• Parts in contact with fluid are corrosion-free • Low-wearing due to floating impellers • Integrated non-return valve • Vertical and horizontal installation possible
Further information	Series information from page 1263 Wilo online catalogue at www.wilo.com	Series information from page 1265 Wilo online catalogue at www.wilo.com	Series information from page 1267 Wilo online catalogue at www.wilo.com

Series overview

Series	**Wilo-Sub TWU 4-QC**	**Wilo-Sub TWI 4-..-B**
Product photo		
Duty chart	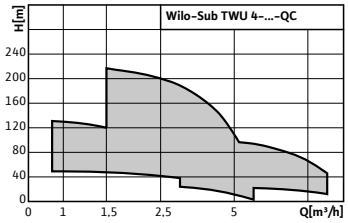	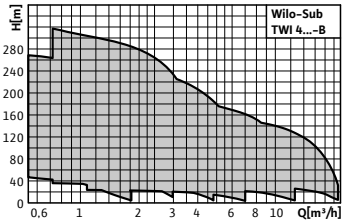
Design	Submersible pump, multistage	Submersible pump, multistage
Application	• For water supply from boreholes and rainwater storage tanks • For domestic water supply, sprinkling and irrigation • Pressure boosting • Lowering the water level • For pumping water without long-fibre and abrasive constituents	• For water and potable water supply from boreholes and rainwater storage • Process water supply • For municipal water supply, sprinkling and irrigation • Pressure boosting • Lowering the water level • For pumping water in industrial applications • For pumping water without long-fibre and abrasive constituents
H_{max}	231 m	315 m
Q_{max}	12 m^3/h	21 m^3/h
Special features/ product advantages	• Parts that come in contact with fluids are corrosion-free • Low-wearing due to floating impellers • Integrated non-return valve • Quick and easy extension of motor cable, without dismantling the pump • Vertical and horizontal installation possible	• Easy maintenance due to rapid installation and dismantling • Integrated non-return valve • Vertical and horizontal installation possible
Further information	Series information from page 1269 Wilo online catalogue at www.wilo.com	Series information from page 1271 Wilo online catalogue at www.wilo.com

Raw water intake

Single pumps

Series overview

Series	**Wilo-Sub TWI 6-..-B**	**Wilo-Sub TWI 8-..-B**	**Wilo-Sub TWI 10-..-A**
Product photo			
Duty chart	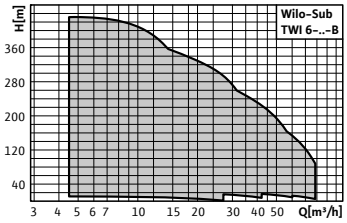	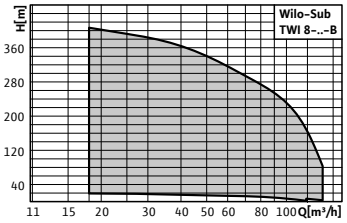	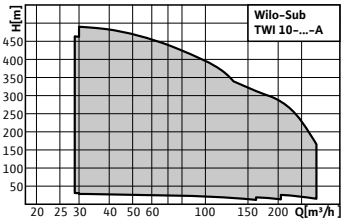
Design	Submersible pump, multistage	Submersible pump, multistage	Submersible pump, multistage
Application	• For water and potable water supply from boreholes and rainwater storage tanks • Process water supply • For municipal water supply, sprinkling and irrigation • Pressure boosting • Lowering the water level • For pumping water in industrial applications • For pumping water without long-fibre and abrasive constituents	• For water and potable water supply from boreholes and rainwater storage • Process water supply • For municipal water supply, sprinkling and irrigation • Pressure boosting • Lowering the water level • For pumping water in industrial applications • For pumping water without long-fibre and abrasive constituents	• For water and potable water supply from boreholes and rainwater storage • Process water supply • For municipal water supply, sprinkling and irrigation • Pressure boosting • Lowering the water level • For pumping water in industrial applications • For pumping water without long-fibre and abrasive constituents
H_{max}	427 m	420 m	500 m
Q_{max}	78 m^3/h	120 m^3/h	160 m^3/h
Special features/ product advantages	• Easy maintenance due to rapid installation and dismantling • Integrated non-return valve • Vertical and horizontal installation possible • Standard and configurable versions available • Star/delta starting • Cast and rewindable motors	• Easy maintenance due to rapid installation and dismantling • Integrated non-return valve • Vertical and horizontal (stage-dependent) installation possible • Standard and configurable versions available • Star/delta starting • Cast and rewindable motors	• Easy maintenance due to rapid installation and dismantling • Integrated non-return valve • Vertical and horizontal (stage-dependent) installation possible • Star/delta starting • Cast and rewindable motors • Hydraulics in corrosion-free stainless steel design
Further information	Series information from page 1309 Wilo online catalogue at www.wilo.com	Series information from page 1344 Wilo online catalogue at www.wilo.com	Series information from page 1375 Wilo online catalogue at www.wilo.com

Series description Wilo-Sub TWU 3

Design
Submersible pump, multistage

Type key

e.g.	**Wilo-Sub TWU 3-0115**
TWU	Submersible pump
3	Diameter of the hydraulic unit in inches ["]
01	Nominal volume flow [m^3/h]
15	Number of hydraulic stages

Application
- For private water supply from boreholes, wells and rainwater storage tanks
- For domestic water supply, sprinkling and irrigation
- For pumping water without long-fibre and abrasive constituents

Special features/product advantages
- Rewindable motor
- Integrated non-return valve
- Parts that come in contact with fluids are corrosion-free
- Pump connection head and flange made of stainless steel
- Vertical and horizontal installation possible
- Single-phase version with starting capacitor and On/Off switch

Technical data
- Mains connection: 1~230 V, 50 Hz or 3~400 V, 50 Hz
- Immersed operating mode: S1
- Fluid temperature: 3-35 °C
- Minimum flow rate at motor: 0.08 m/s
- Max. sand content: 50 g/m^3
- Max. number of starts: 30 /h
- Max. immersion depth: 150 m
- Protection class: IP 58
- Pressure connection: Rp 1

Equipment/function
- Multistage submersible-motor pump with radial impellers
- Integrated non-return valve
- NEMA coupling
- Single-phase or three-phase AC motor
- Integrated thermal motor protection for single-phase motor

Materials
- Hydraulic housing: 1.4301 stainless steel
- Impellers: polycarbonate
- Hydraulics shaft: 1.4104 stainless steel
- Motor housing: 1.4301 stainless steel
- Motor shaft: 1.4305 stainless steel

Description/design
Submersible-motor pump for vertical or horizontal installation.

Hydraulics
Multistage submersible-motor pump with radial impellers with sectional construction. Integrated non-return valve. All parts in contact with the fluid are made of corrosion-free materials.

Motor
Corrosion-free single-phase or three-phase motor for direct starting, with rewindable motor, oil-filled, self-lubricating bearing.

Cooling
The motor is cooled by the fluid. The motor must always be operated in submerged state. The limit values for the max. fluid temperature and the minimum flow rate must not be exceeded. Vertical installation is possible optionally with or without cooling jacket. Cooling jacket is required for horizontal installation.

Options
- Motor versions for special voltages 3~230 V, 50 Hz; 1~230 V, 60 Hz; 3~380 V, 60 Hz

Scope of delivery
- Hydraulics + motor fully assembled
- 1.8 m connecting cable approved for potable water (cross-section: 4x1.5 mm^2)
- Single-phase version including switchbox with capacitor, thermal motor protection and On/Off switch
- Installation and operating instructions

Accessories
- Cooling jacket pipes
- Diaphragm pressure vessel
- Cable kits for potable and process water
- Float switch
- Switchgears
- Connection and installation material

Series description Wilo-Sub TWU 3

Configuration

- No suction mode is possible with these units!
- The unit must be fully immersed in water during operation.

Pump curves

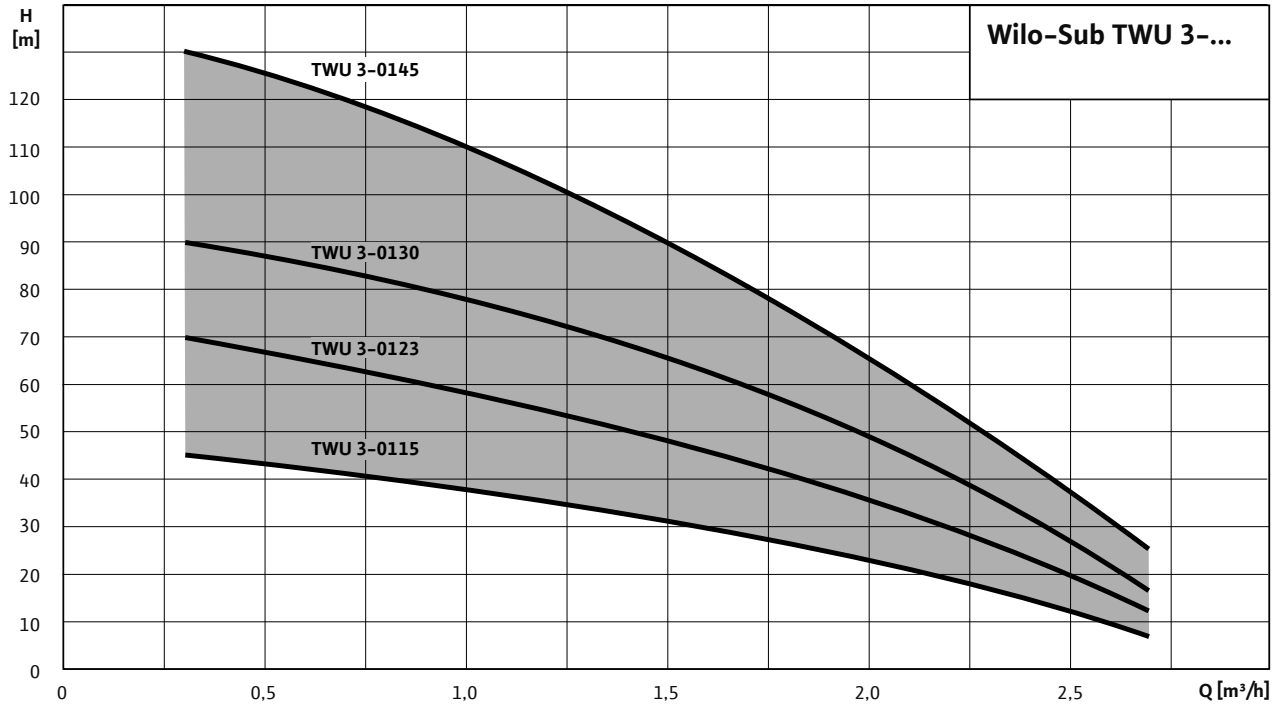

1~230 V, 50 Hz, p = 1 kg/dm^3, v = 1x10^{-6} m^2/s, ISO 9906 Annex A, η = pump efficiency

Series description Wilo-Sub TWU 3 HS

Design
Submersible pump, multistage

Type key

e.g.	**Wilo sub TWU 3-0305-HS-E-CP**
TWU	Submersible pump
3	Diameter of the hydraulic unit in inches ["]
03	Nominal volume flow [m^3/h]
05	Number of hydraulic stages
HS	High-speed version
E	Frequency converter version E = external frequency converter I = external frequency converter
CP	Control function CP = constant pressure control without = fixed speed with up to 8400 rpm

Application
- For private water supply from boreholes, wells and rainwater storage tanks
- For domestic water supply, sprinkling and irrigation
- For pumping water without long-fibre and abrasive constituents

Special features/product advantages
- Expanded flow capacity by increased rotation speed (up to 8400 rpm)
- Rewindable motor
- Integrated non-return valve
- Parts that come in contact with fluids are corrosion-free
- Including frequency converter (HS-E...: external, installed in the piping; HS-I...: built into the motor)
- Vertical and horizontal installation possible

Technical data
Submersible pump:
- Supply voltage:
  HS-E...: 1~230 V, 50/60 Hz (connection to the AC mains supply by a frequency converter)
  HS-I...: 1~230 V, 50/60 Hz (direct connection to the AC mains supply)
- Immersed operating mode: S1
- Fluid temperature: 3-35 °C
- Minimum flow rate at motor: 0.08 m/s
- Max. sand content: 50 g/m^3
- Max. number of starts: 30 /h
- Max. immersion depth: 150 m
- Protection class: IP 58
- Pressure connection: Rp 1

Frequency converter for version "HS-E...":
- Mains connection: 1~230 V, 50/60 Hz
- Output: 3~230 V/max.140 Hz/max.2.2 kW
- Fluid temperature: 3-50 °C
- Max. pressure: 8 bar
- Protection class: IP X5
- Connection: G 1¼

Equipment/function
- Multistage submersible-motor pump with radial impellers
- Integrated non-return valve
- Including frequency converter (HS-E...: external, HS-I...: built-in)
- Thermal motor protection built into the frequency converter

Materials
- Hydraulic housing: Stainless steel 1.4301
- Impellers: Polycarbonate
- Hydraulics shaft: 1.4104 stainless steel
- Motor housing: Stainless steel 1.4301
- Motor shaft: 1.4305 stainless steel

Description/design
Submersible pump for vertical or horizontal installation.

Hydraulics
Multistage submersible pump with radial impellers with sectional construction. Integrated non-return valve. All parts in contact with the fluid are made of corrosion-free materials.

Motor
Corrosion-free asynchronous motor for connection to the frequency converter supplied (HS-E...) or for direct connection to the mains power supply (HS-I...). Rewindable oil-filled motor with self-lubricating bearings, designed for high speeds up to 8400 rpm.

Frequency converter
External frequency converter or frequency converter integrated within the motor, for operation of the pump at speeds up to 8400 rpm, including the following functions:
- Soft starter

Series description Wilo-Sub TWU 3 HS

- Undervoltage, overvoltage and short-circuit protection
- Thermal overload protection of the motor and the frequency converter

The version "HS-E..." with external frequency converter offers the following additional equipment features:
- Control function "CP": Constant pressure
- Avoidance of frequent switching (cycling) by leakage monitoring
- Dry-running protection with automatic reset
- Change of direction of rotation
- Setting for max. flow and target pressure
- Pressure is shown on the display
- Settings, operating statuses and error messages are shown by LEDs or on the display.

The frequency converter always must be installed outside the fluid where it will be protected against overflows!

Control function "CP": Constant pressure
Operation with the frequency converter means the rotation speed of the unit is adapted to the current water requirements automatically. As a result, the submersible pump always delivers a constant pressure.

Cooling
The motor is cooled by the fluid. The motor must always be operated in submerged state. The limit values for the max. fluid temperature and the minimum flow rate must not be exceeded.
In cases of vertical installation, a cooling jacket must be provided depending on the diameter of the bore. In cases of horizontal installation, a cooling jacket must always be provided .

The external frequency converter is also cooled by the fluid. For this the frequency converter must be installed directly in the piping outside the fluid (overflow-proof).

Options
- Special cable lengths on request

Scope of delivery
- Hydraulics + motor ready assembled
- Frequency converter
- 1.75 m connecting cable approved for potable water (cross-section: 4x1.5 mm^2)
- Installation and operating instructions

Accessories
- Cooling jacket pipes
- Diaphragm pressure vessel
- Cable kits for potable and process water
- Float switch
- Switchgears
- Connection and installation material

Configuration
- No suction mode is possible with these units!
- The unit must be fully immersed in water during operation.
- An adapter of Rp 1 to G 1¼ in required for installation. This must be provided on site!

Pump curves

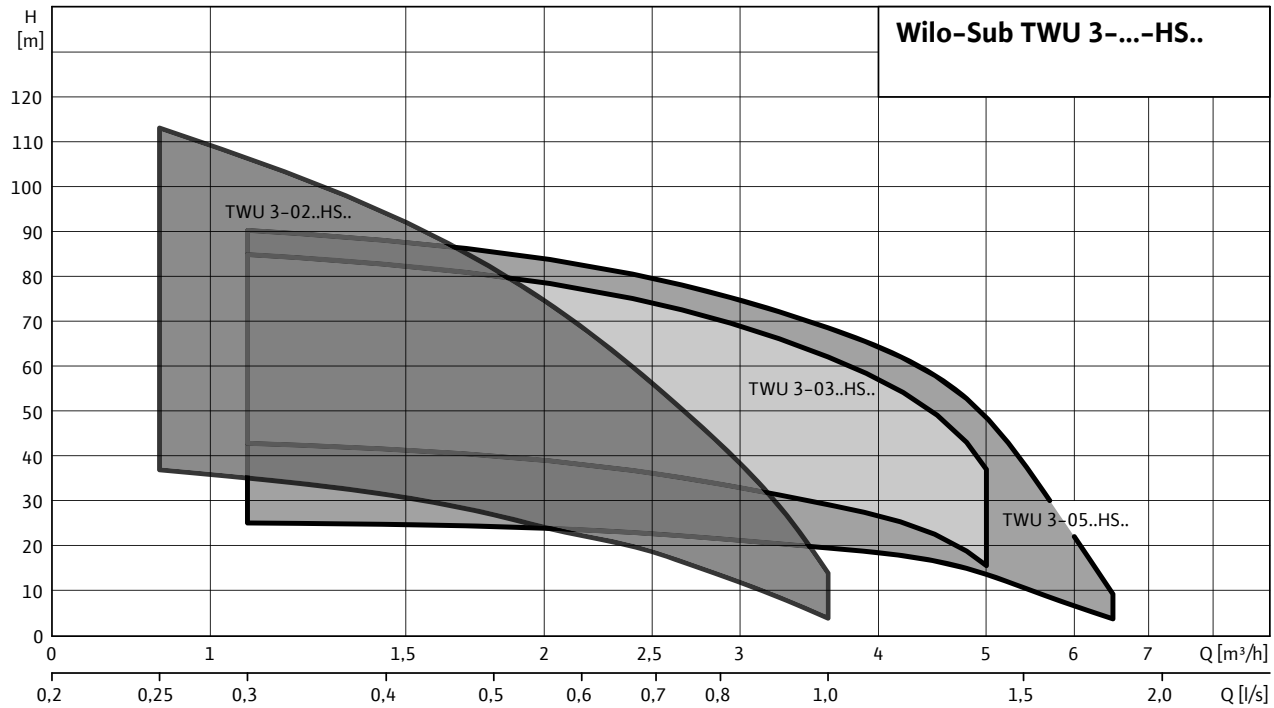

Series description Wilo-Sub TWU 4

ErP READY — APPLIES TO EUROPEAN DIRECTIVE FOR ENERGY RELATED PRODUCTS

Design
Submersible pump, multistage

Type key

e.g.	**Wilo-Sub TWU 4-0203-C**
TWU	Submersible pump
4	Diameter of the hydraulic unit in inches ["]
02	Nominal volume flow [m^3/h]
03	Number of hydraulic stages
C	Series generation

Application
- For water supply from boreholes and rainwater storage tanks
- For domestic water supply, sprinkling and irrigation
- Pressure boosting
- Lowering the water level
- For pumping water without long-fibre and abrasive constituents

Special features/product advantages
- Parts in contact with fluid are corrosion-free
- Low-wearing due to floating impellers
- Integrated non-return valve
- Vertical and horizontal installation possible

Technical data
- Mains connection: 1~230 V, 50 Hz or 3~400 V, 50 Hz
- Immersed operating mode: S1
- Fluid temperature: 3-30 °C
- Minimum flow rate at motor: 0.08 m/s
- Max. sand content: 50 g/m^3
- Max. number of starts: 20/h
- Max. immersion depth: 200 m
- Protection class: IP 68
- Pressure connection: Rp 1¼ - Rp 2

Equipment/function
- Multistage submersible-motor pump with radial or semi-axial impellers
- Hermetically cast motors
- Integrated non-return valve
- NEMA coupling
- Single-phase or three-phase motor
- Integrated thermal motor protection for single-phase motor

Materials
- Hydraulic housing: Stainless steel 1.4301
- Impellers: Noryl
- Hydraulics shaft: 1.4104 stainless steel
- Motor housing: Stainless steel 1.4301
- Motor shaft: 1.4305 stainless steel

Description/design
Submersible-motor pump for vertical or horizontal installation.

Hydraulics
Multistage submersible-motor pump with radial or semi-axial impellers in sectional construction. Integrated non-return valve. All parts in contact with the fluid are made of corrosion-free materials.

Motor
Corrosion-free single-phase or three-phase motor for direct starting.Sealed and hermetically cast motor with enamel-insulated winding, resin-impregnated, self-lubricating bearing, with water-glycol filling.

Cooling
The motor is cooled by the fluid. The motor must always be operated in submerged state. The limit values for the max. fluid temperature and the minimum flow rate must not be exceeded. Vertical installation is possible optionally with or without cooling jacket. Cooling jacket is required for horizontal installation.

Options
- Motor versions for special voltages 3~230 V, 50 Hz; 3~500 V, 50 Hz; 1~230 V, 60 Hz; 3~230 V, 60 Hz; 3~380 V, 60 Hz; 3~460 V, 60 Hz

Scope of delivery
- Hydraulics + motor fully mounted
- 1.5/1.75/2.5 m connecting cable approved for potable water (cross-section: 4x1.5 mm^2)

Series description Wilo-Sub TWU 4

- Single-phase version including switchbox with capacitor, thermal motor protection and On/Off switch
- Installation and operating instructions

Accessories
- Cooling jacket pipes
- Diaphragm pressure vessel
- Cable kits for potable and process water
- Float switch
- Switchgears
- Connection and installation material

Configuration
- No suction mode is possible with these units!
- The unit must be fully immersed in water during operation.

General notes - ErP (ecological design-) directive
Minimum Efficiency Index (MEI) ≥ 0.1
- The benchmark for most efficient water pumps is MEI ≥ 0.70
- The efficiency of a pump with a trimmed impeller is usually lower than that of a pump with the full impeller diameter. The trimming of the impeller will adapt the pump to a fixed duty point, leading to reduced energy consumption. The minimum efficiency index (MEI) is based on the full impeller diameter.
- The operation of this water pump with variable duty points may be more efficient and economic when controlled, for example, by the use of a variable speed drive that matches the pump duty to the system.
- Information on benchmark efficiency is available at **www.europump.org/efficiencycharts**

Pump curves

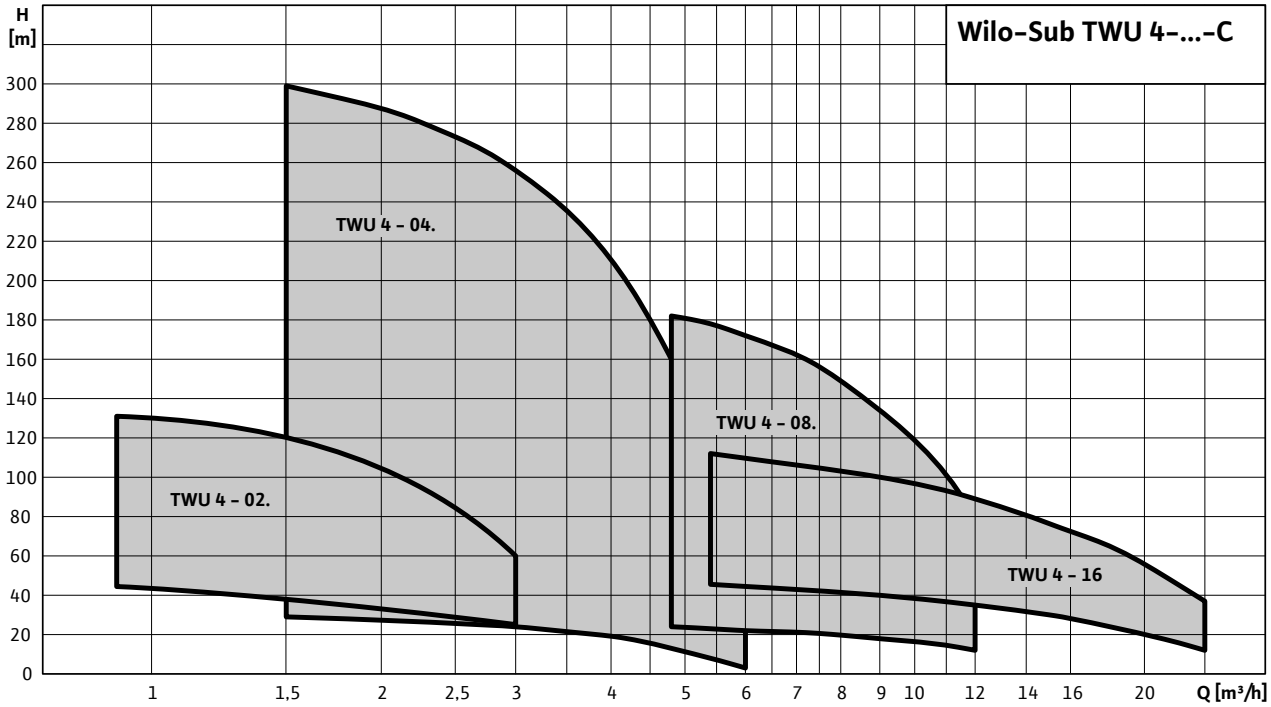

1~230 V or 3~400 V, 50 Hz, p = 1 kg/dm^3, v = 1x10^{-6} m^2/s, ISO 9906 Annex A, η = pump efficiency

Series description Wilo-Sub TWU 4-QC

ErP READY — APPLIES TO EUROPEAN DIRECTIVE FOR ENERGY RELATED PRODUCTS

Design
Submersible pump, multistage

Type key

e.g.	**Wilo-Sub TWU 4-0203-C-QC**
TWU	Submersible pump
4	Diameter of the hydraulic unit in inches ["]
02	Nominal volume flow [m^3/h]
03	Number of hydraulic stages
C	Series generation
QC	Quick Connect Cable for simple and fast extension for the motor cable

Application
- For water supply from boreholes and rainwater storage tanks
- For domestic water supply, sprinkling and irrigation
- Pressure boosting
- Lowering the water level
- For pumping water without long-fibre and abrasive constituents

Special features/product advantages
- Parts that come in contact with fluids are corrosion-free
- Low-wearing due to floating impellers
- Integrated non-return valve
- Quick and easy extension of motor cable, without dismantling the pump
- Vertical and horizontal installation possible

Technical data
- Mains connection: 1~230 V, 50 Hz or 3~400 V, 50 Hz
- Immersed operating mode: S1
- Fluid temperature: 3-30 °C
- Minimum flow rate at motor: 0.08 m/s
- Max. sand content: 50 g/m^3
- Max. number of starts: 20/h
- Max. immersion depth: 200 m
- Protection class: IP 68
- Pressure connection: Rp 1¼ - Rp 2

Equipment/function
- Multistage submersible-motor pump with radial or semi-axial impellers
- Hermetically cast motors
- Integrated non-return valve
- NEMA coupling
- Single-phase or three-phase motor
- Integrated thermal motor protection for single-phase motor

Materials
- Hydraulic housing: 1.4301 stainless steel
- Impellers: Noryl
- Hydraulics shaft: 1.4104 stainless steel
- Motor housing: 1.4301 stainless steel
- Motor shaft: 1.4305 stainless steel

Description/design
Submersible-motor pump for vertical or horizontal installation.

Hydraulics
Multistage submersible-motor pump with radial or semi-axial impellers in sectional construction. Integrated non-return valve. All parts in contact with the fluid are made of corrosion-free materials.

Motor
Corrosion-free single-phase or three-phase AC motor for direct starting. Sealed and hermetically cast motor, resin-impregnated, with enamel-insulated winding, self-lubricating bearing, with water-glycol filling.

Cooling
The motor is cooled by the fluid. The motor must always be operated in submerged state. The limit values for the max. fluid temperature and the minimum flow rate must not be exceeded. Vertical installation is possible optionally with or without cooling jacket. Cooling jacket is required for horizontal installation.

Options
- Motor versions for special voltages 1~230 V, 60 Hz; 3~380 V, 60 Hz

Series description Wilo-Sub TWU 4-QC

Scope of delivery
- Hydraulics + motor fully mounted
- 1.5 or 1.75 m connecting cable approved for potable water (cross-section: 4x1.5 mm^2)
- Cable binders
- Retaining cable made of polypropylene
- 1x clamp for fixing the retaining cable to the unit
- Single-phase version including switchbox with capacitor, thermal motor protection and On/Off switch
- Installation and operating instructions

Accessories
- Quick Connect Cable: Quick-connection cable for fast and easy extension of the motor cable.
- Cooling jacket pipes
- Diaphragm pressure vessel
- Cable kits for potable and process water
- Float switch
- Switchgears
- Connection and installation material

Configuration
- No suction mode is possible with these units!
- The unit must be fully immersed in water during operation.

General notes - ErP (ecological design-) directive
Minimum Efficiency Index (MEI) ≥ 0.1
- The benchmark for most efficient water pumps is MEI ≥ 0.70
- The efficiency of a pump with a trimmed impeller is usually lower than that of a pump with the full impeller diameter. The trimming of the impeller will adapt the pump to a fixed duty point, leading to reduced energy consumption. The minimum efficiency index (MEI) is based on the full impeller diameter.
- The operation of this water pump with variable duty points may be more efficient and economic when controlled, for example, by the use of a variable speed drive that matches the pump duty to the system.
- Information on benchmark efficiency is available at **www.europump.org/efficiencycharts**

Pump curves

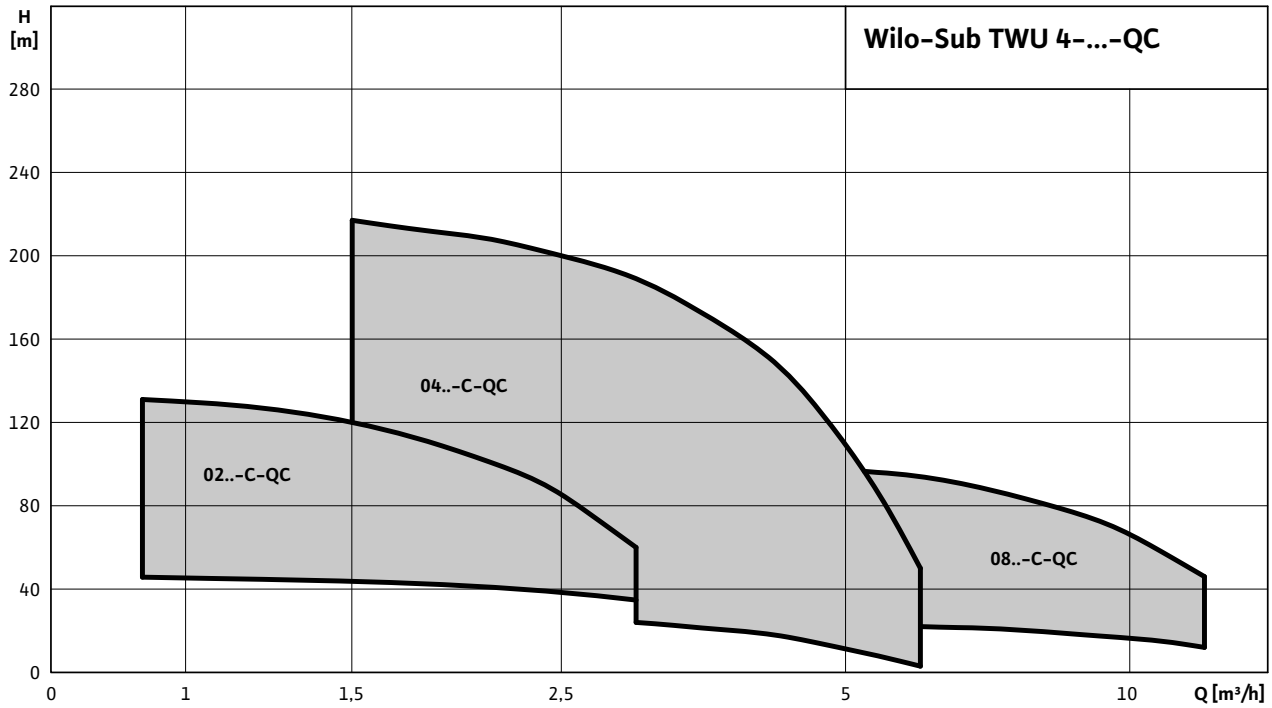

1~230 V or 3~400 V, 50 Hz, p = 1 kg/dm^3, v = 1x10^{-6} m^2/s, ISO 9906 Annex A, η = pump efficiency

Series description Wilo-Sub TWI 4-..-B

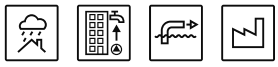

ErP READY — APPLIES TO EUROPEAN DIRECTIVE FOR ENERGY RELATED PRODUCTS

Design
Submersible pump, multistage

Type key

e.g.	**Wilo-Sub TWI 4.01-09-B**
TWI	Submersible pump
4	Diameter of the hydraulic unit in inches ["]
01	Nominal volume flow [m^3/h]
09	Number of hydraulic stages
B	Series generation

Application
- For water and potable water supply from boreholes and rainwater storage
- Process water supply
- For municipal water supply, sprinkling and irrigation
- Pressure boosting
- Lowering the water level
- For pumping water in industrial applications
- For pumping water without long-fibre and abrasive constituents

Special features/product advantages
- Easy maintenance due to rapid installation and dismantling
- Integrated non-return valve
- Vertical and horizontal installation possible

Technical data
- Mains connection: 1~230 V, 50 Hz or 3~400 V, 50 Hz
- Immersed operating mode: S1
- Fluid temperature: 3-30 °C
- Minimum flow rate at motor: 0.1 m/s
- Max. sand content: 50 g/m^3
- Max. number of starts: 20/h
- Max. immersion depth: 350 m
- Protection class: IP 68
- Pressure connection: Rp 1¼ - Rp 2

Equipment/function
- Multistage submersible-motor pump with radial impellers
- Integrated non-return valve
- NEMA coupling
- Single-phase or three-phase motor
- Hermetically cast motors

Materials
- Hydraulic housing: 1.4301 stainless steel
- Impellers: 1.4301 stainless steel
- Hydraulics shaft: 1.4057 stainless steel
- Motor housing: 1.4301 stainless steel
- Motor shaft: 1.4305 stainless steel

Description/design
Submersible-motor pump for vertical or horizontal installation.

Hydraulics
Multistage submersible-motor pump with 4" NEMA connection and radial or semi-axial impellers with sectional construction. Integrated non-return valve. All parts in contact with the fluid are made of corrosion-free materials.

Motor
Corrosion-free single-phase or three-phase AC motor for direct starting. Sealed and hermetically cast motor, resin-impregnated, with enamel-insulated winding, self-lubricating bearing, with water-glycol filling.

Cooling
The motor is cooled by the fluid. The motor must always be operated in submerged state. The limit values for the max. fluid temperature and the minimum flow rate must not be exceeded. Vertical installation is possible optionally with or without cooling jacket. Cooling jacket is required for horizontal installation.

Pressure shroud
The pressure shroud is used for direct installation of the unit in the pipe system. Standard models are without mounted non-return valves. The maximum inlet pressure is 10 bar.

Raw water intake

Single pumps

Series description Wilo-Sub TWI 4-..-B

Options
- Hydraulics in 1.4401 stainless steel
- Three-phase AC motor in 1.4401 stainless steel
- 60 Hz version
- Single-phase motor without soft starter, with integrated lightning and overload protection up to 1.1 kW

Scope of delivery
- Hydraulics + motor fully assembled
- 1.5/2.5 m connecting cable approved for potable water (cross-section: 4x1.5 mm^2)
- Single-phase version including switchbox with capacitor, thermal motor protection and On/Off switch
- Installation and operating instructions

Accessories
- Cooling jacket pipes
- Pressure shroud (for configured units)
- Diaphragm pressure vessel
- Cable kits for potable water and process water
- Switchgears

Configuration
- No suction mode is possible with these units!
- The unit must be fully immersed in water during operation.

General notes - ErP (ecological design-) directive
Minimum Efficiency Index (MEI) ≥ 0.1
- The benchmark for most efficient water pumps is MEI ≥ 0.70
- The efficiency of a pump with a trimmed impeller is usually lower than that of a pump with the full impeller diameter. The trimming of the impeller will adapt the pump to a fixed duty point, leading to reduced energy consumption. The minimum efficiency index (MEI) is based on the full impeller diameter.
- The operation of this water pump with variable duty points may be more efficient and economic when controlled, for example, by the use of a variable speed drive that matches the pump duty to the system.
- Information on benchmark efficiency is available at **www.europump.org/efficiencycharts**

Pump curves

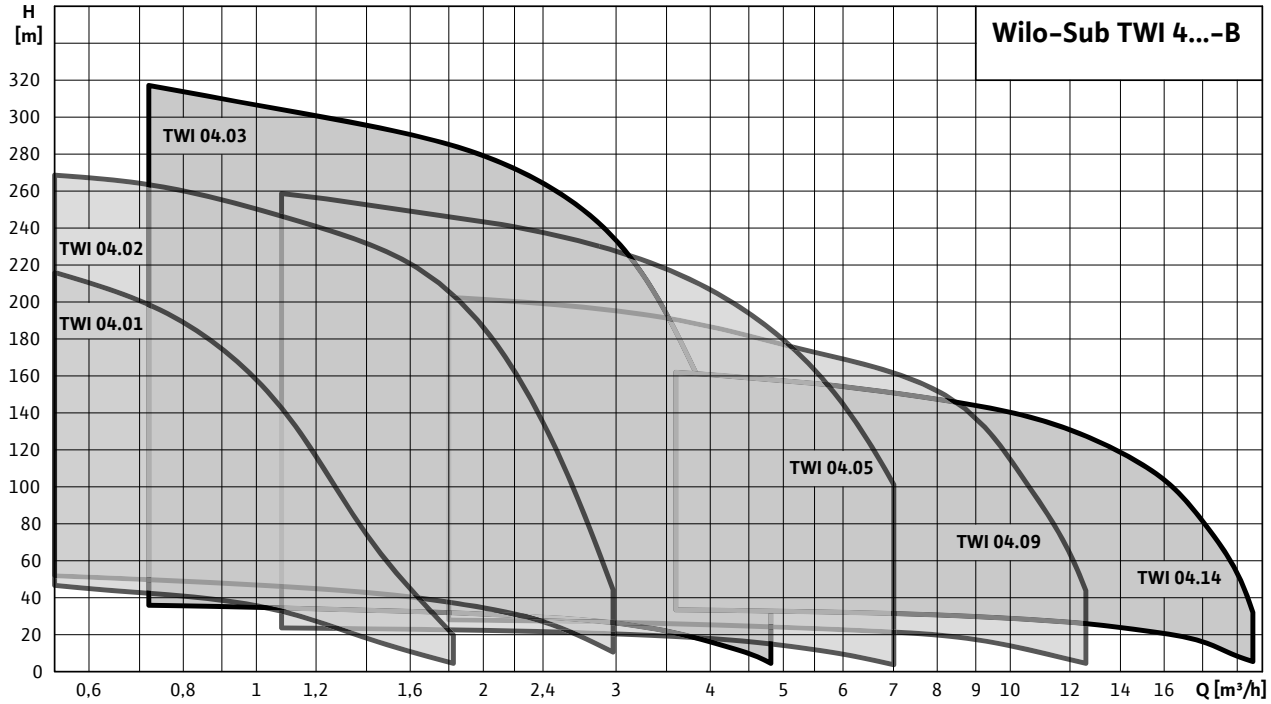

1~230 V, 50 Hz, p = 1 kg/dm^3, v = 1x10^{-6} m^2/s, ISO 9906 Annex A, η = pump efficiency

Wilo-Sub TWI 4.01..-B (1~230 V)

Pump curves Wilo-Sub TWI 4.01..-B (1~230 V)

Minimum Efficiency Index (MEI): ≥ 0.7

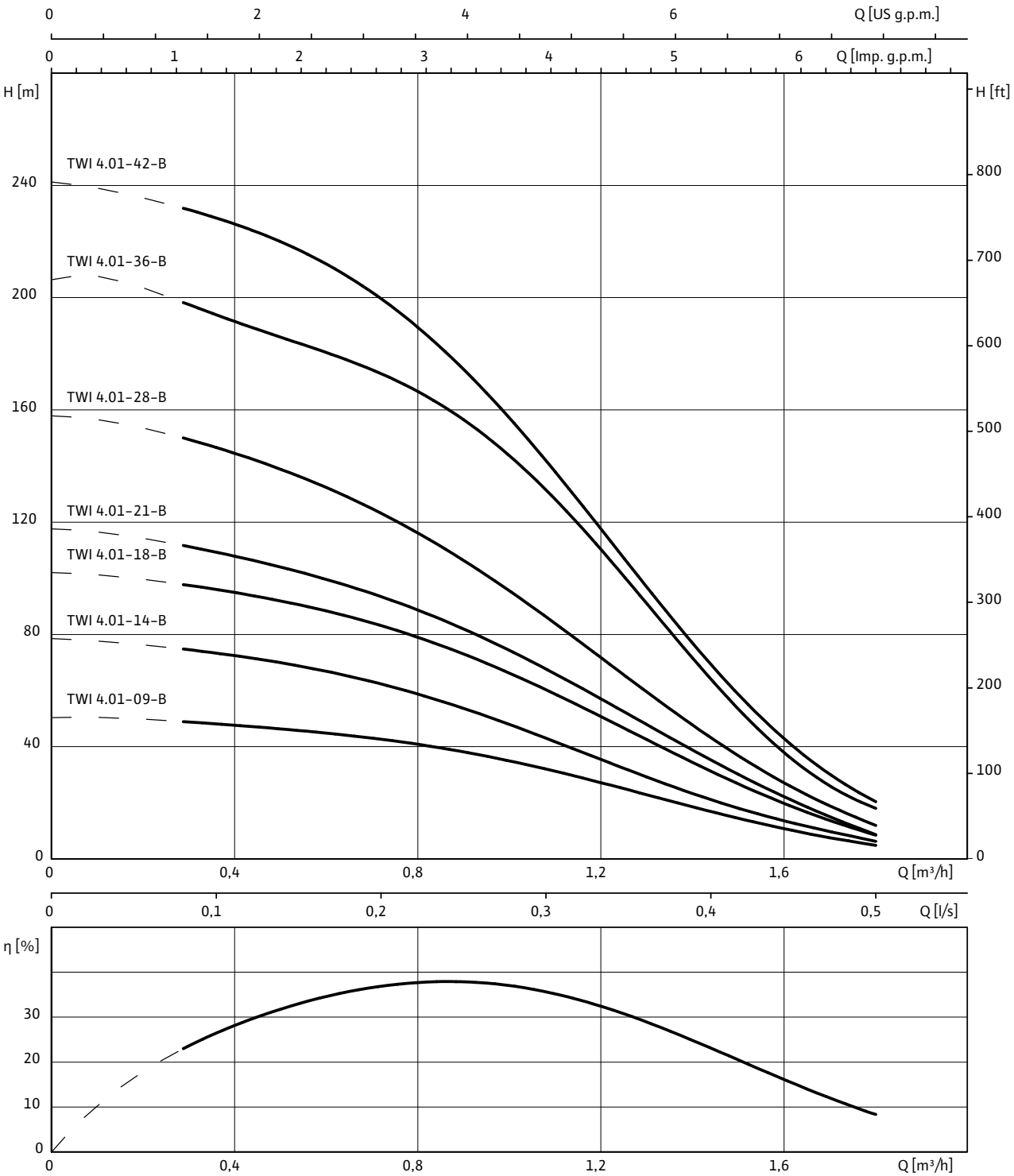

1~230 V, 50 Hz, p = 1 kg/dm^3, ν = 1x10^{-6} m^2/s, ISO 9906 Annex A, η = pump efficiency

Raw water intake

Single pumps

Wilo-Sub TWI 4.01..-B (1~230 V)

Motor data						
Wilo-Sub...	**Mains connection**	**Motor diameter**	**Nominal motor power**	**Nominal current**	**Length of connecting cable**	**Cable cross-section**
		Ø	P_2	I_N		
		"	kW	A	m	mm^2
TWI 4.01-09-B	1~230 V, 50 Hz	4	0.37	3.2	2.5	4G1.5
TWI 4.01-14-B	1~230 V, 50 Hz	4	0.55	4.3	2.5	4G1.5
TWI 4.01-18-B	1~230 V, 50 Hz	4	0.55	4.3	2.5	4G1.5
TWI 4.01-21-B	1~230 V, 50 Hz	4	0.75	5.7	2.5	4G1.5
TWI 4.01-28-B	1~230 V, 50 Hz	4	1.1	8.6	2.5	4G1.5
TWI 4.01-36-B	1~230 V, 50 Hz	4	1.1	8.6	2.5	4G1.5
TWI 4.01-42-B	1~230 V, 50 Hz	4	1.5	10.6	2.5	4G1.5

Flange dimensions									
Wilo-Sub...	**Connection**			**Pressure class**			**Dimensions**		
	DN1	*DN2*	*DN3*	PN_1	PN_2	PN_3	*D2*	*K*	*D*
	mm			bar			mm		
TWI 4.01...	Rp 1¼	–	–	10-40	–	–	–	–	–
TWI 4.01...	–	DN 50	DN 50	–	10-40	10	4x18	125	165

[3] For power cable in accordance with I_N, max. ø for threaded connection, [7] Weight of pressure shroud

Information for order placements					
Wilo-Sub...	**Mains connection**	🚚	**Art no.**	**Art. no. for cooling jacket pipe**	
				for vertical installation (B)	*for horizontal installation (D)*
TWI 4.01-09-B	1~230 V, 50 Hz	L	6043566	–	6037935
TWI 4.01-14-B	1~230 V, 50 Hz	L	6043567	4064430	6038901
TWI 4.01-18-B	1~230 V, 50 Hz	K	6043568	4064430	6038901
TWI 4.01-21-B	1~230 V, 50 Hz	K	6043569	4064430	6038901
TWI 4.01-28-B	1~230 V, 50 Hz	A	6043570	4064431	6037936
TWI 4.01-36-B	1~230 V, 50 Hz	A	6043571	4064431	6037936
TWI 4.01-42-B	1~230 V, 50 Hz	A	6043572	4064431	6037936

🚚= ready for delivery, L = stock article, C = order-specific production approx. 2 weeks, K = order-specific production approx. 4 weeks, A = delivery time on request

Wilo-Sub TWI 4.01..-B (1~230 V)

Dimension drawing Wilo-Sub TWI 4.01

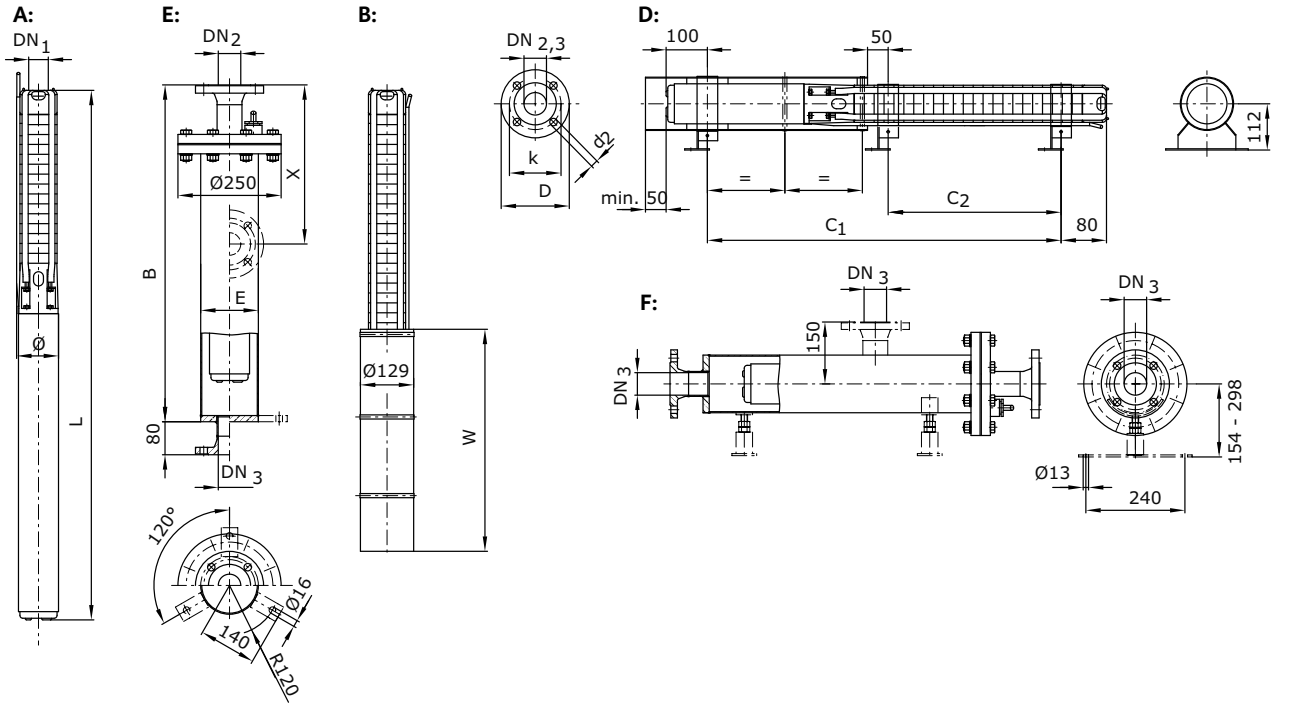

A = vertical, B = vertical with cooling jacket, D = horizontal with cooling jacket, E = vertical with pressure shroud, F = horizontal with pressure shroud

Dimensions, weights

Wilo-Sub...	Dimensions							Weight	Weight of unit	Installation
	B	*C1*	*C2*	*E*	*L*	*W*	*ø* [3]	*Jacket*[7]	*m*	
	mm							kg		
TWI 4.01-09-B	920	405	–	139.7	598	500	98	33	11.2	A, B, D, E, F
TWI 4.01-14-B	1220	539	208	139.7	732	500	98	36	13.3	A, B, D, E, F
TWI 4.01-18-B	1220	633	302	139.7	816	500	98	36	14	A, B, D, E, F
TWI 4.01-21-B	1220	714	355	139.7	907	500	98	36	15.8	A, B, D, E, F
TWI 4.01-28-B	1520	918	502	139.7	1082	750	98	38	18.3	A, B, D, E, F
TWI 4.01-36-B	1820	1121	705	139.7	1273	750	98	41	22	A, B, D, E, F
TWI 4.01-42-B	1820	1275	831	139.7	1428	750	98	41	24.8	A, B, D, E, F

[3] For power cable in accordance with I_N, max. ø for threaded connection, [7] Weight of pressure shroud

Wilo-Sub TWI 4.02..-B (1~230 V)

Pump curves Wilo-Sub TWI 4.02..-B (1~230 V)

Minimum Efficiency Index (MEI): ≥ 0.7

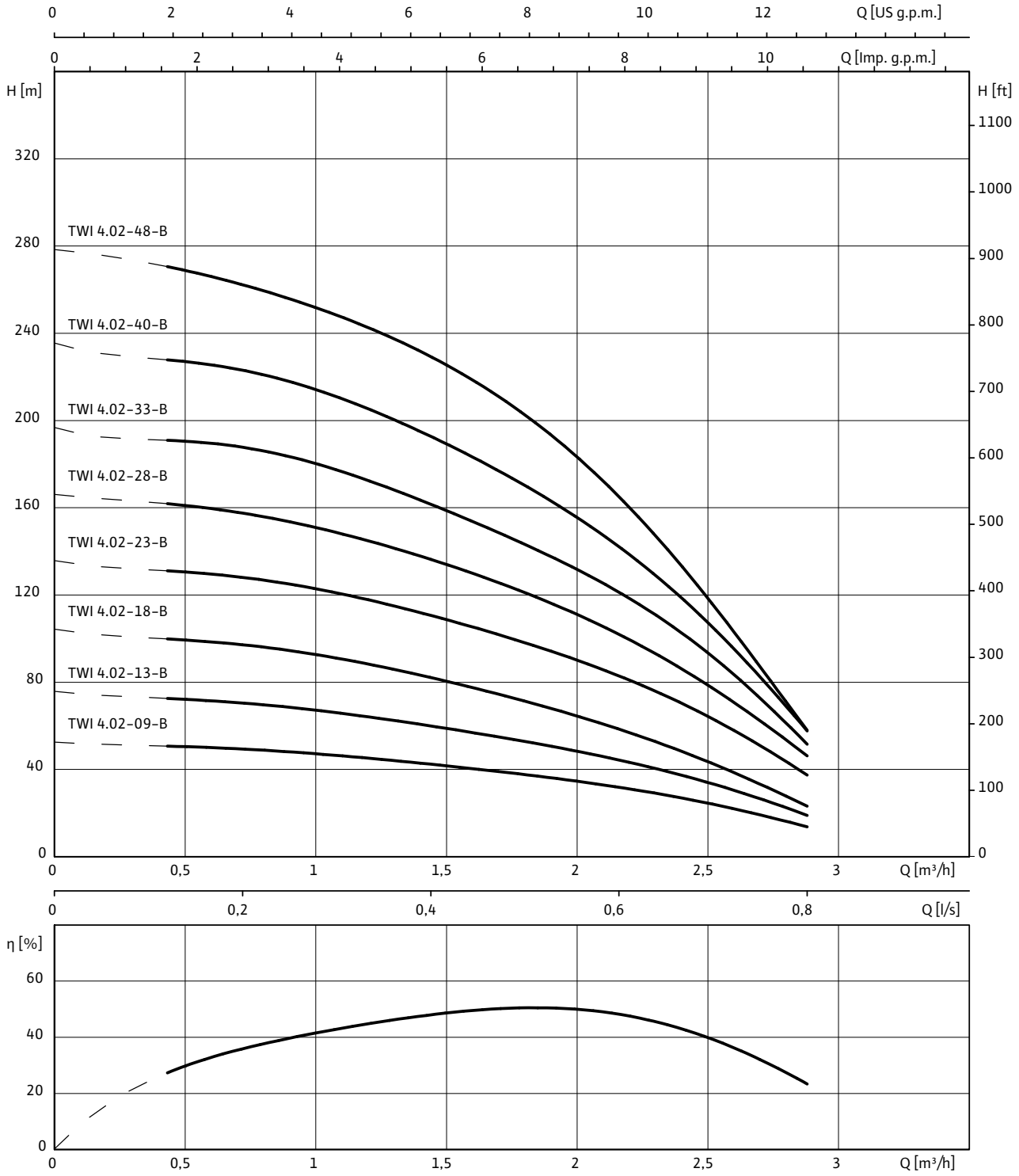

1~230 V, 50 Hz, p = 1 kg/dm^3, v = 1x10^{-6} m^2/s, ISO 9906 Annex A, η = pump efficiency

Wilo-Sub TWI 4.02..-B (1~230 V)

Motor data

Wilo-Sub...	Mains connection	Motor diameter	Nominal motor power	Nominal current	Length of connecting cable	Cable cross-section
		Ø	P_2	I_N		
		"	kW	A	m	mm^2
TWI 4.02-09-B	1~230 V, 50 Hz	4	0.55	4.3	2.5	4G1.5
TWI 4.02-13-B	1~230 V, 50 Hz	4	0.75	5.7	2.5	4G1.5
TWI 4.02-18-B	1~230 V, 50 Hz	4	1.1	8.6	2.5	4G1.5
TWI 4.02-23-B	1~230 V, 50 Hz	4	1.1	8.6	2.5	4G1.5
TWI 4.02-28-B	1~230 V, 50 Hz	4	1.5	10.6	2.5	4G1.5
TWI 4.02-33-B	1~230 V, 50 Hz	4	1.5	10.6	2.5	4G1.5
TWI 4.02-40-B	1~230 V, 50 Hz	4	2.2	15.5	2.5	4G1.5
TWI 4.02-48-B	1~230 V, 50 Hz	4	2.2	15.5	2.5	4G1.5

Flange dimensions

Wilo-Sub...	Connection			Pressure class			Dimensions		
	DN1	*DN2*	*DN3*	PN_1	PN_2	PN_3	*D2*	*K*	*D*
	mm			bar			mm		
TWI 4.02...	Rp 1¼	–	–	10-40	–	–	–	–	–
TWI 4.02...	–	DN 50	DN 50	–	10-40	10	4x18	125	165

Information for order placements

Wilo-Sub...	Mains connection	🚚	Art no.	Art. no. for cooling jacket pipe	
				for vertical installation (B)	*for horizontal installation (D)*
TWI 4.02-09-B	1~230 V, 50 Hz	L	6042682	4064430	6037935
TWI 4.02-13-B	1~230 V, 50 Hz	L	6042684	4064430	6037935
TWI 4.02-18-B	1~230 V, 50 Hz	L	6042685	4064431	6037936
TWI 4.02-23-B	1~230 V, 50 Hz	L	6042686	4064431	6037936
TWI 4.02-28-B	1~230 V, 50 Hz	K	6042687	4064431	6037936
TWI 4.02-33-B	1~230 V, 50 Hz	K	6042688	4064431	6037936
TWI 4.02-40-B	1~230 V, 50 Hz	A	6042693	4064431	6037936
TWI 4.02-48-B	1~230 V, 50 Hz	A	6042695	4064431	6037936

🚚= ready for delivery, L = stock article, C = order-specific production approx. 2 weeks, K = order-specific production approx. 4 weeks, A = delivery time on request

Raw water intake

Single pumps

Wilo-Sub TWI 4.02..-B (1~230 V)

Dimension drawing Wilo-Sub TWI 4.02

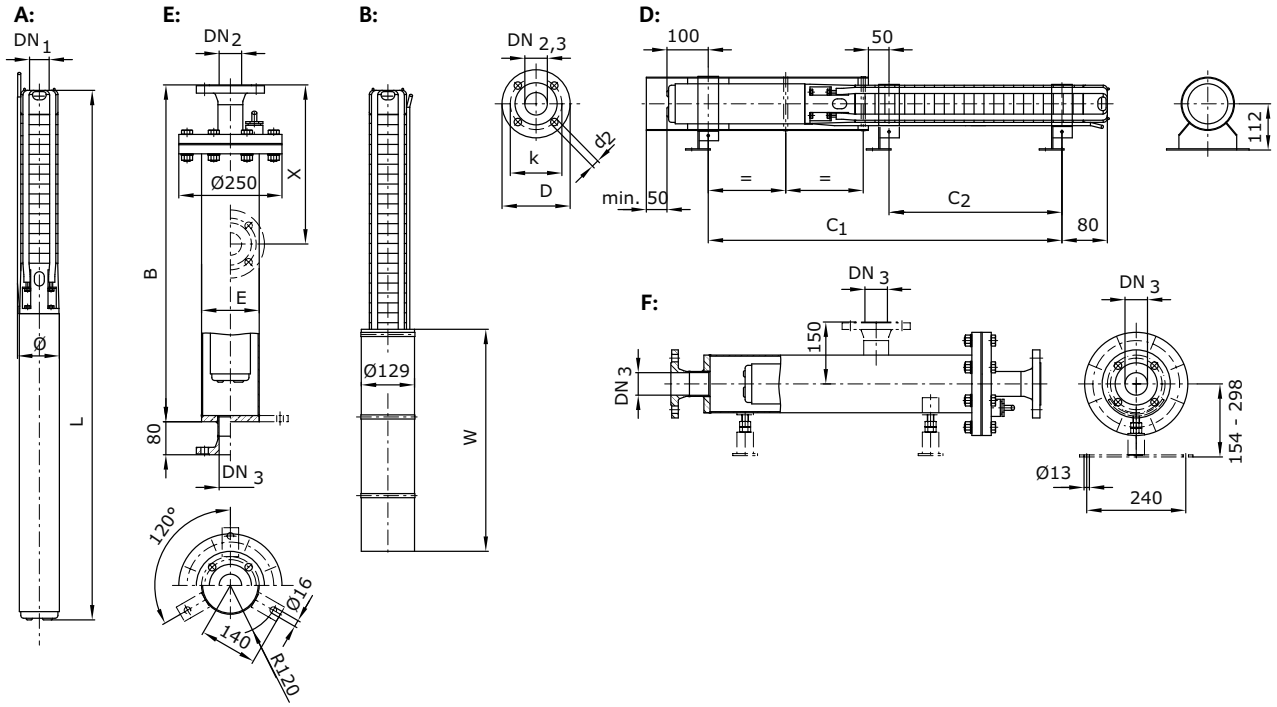

A = vertical, B = vertical with cooling jacket, D = horizontal with cooling jacket, E = vertical with pressure shroud, F = horizontal with pressure shroud

Dimensions, weights

Wilo-Sub...	Dimensions							Weight	Weight of unit	Installation
	B	*C1*	*C2*	*E*	*L*	*W*	*ø* [3]	*Jacket*[7]	*m*	
	mm							kg		
TWI 4.02-09-B	920	434	–	139.7	627	500	98	33	12.6	A, B, D, E, F
TWI 4.02-13-B	1220	546	–	139.7	739	500	98	36	14.6	A, B, D, E, F
TWI 4.02-18-B	1220	708	292	139.7	872	750	98	36	16.8	A, B, D, E, F
TWI 4.02-23-B	1520	813	397	139.7	977	750	98	38	17.8	A, B, D, E, F
TWI 4.02-28-B	1520	946	502	139.7	1111	750	98	38	20.1	A, B, D, E, F
TWI 4.02-33-B	1520	1051	607	139.7	1239	750	98	38	23.2	A, B, D, E, F
TWI 4.02-40-B	1820	1309	789	139.7	1490	750	98	41	29.5	A, B, D, E, F
TWI 4.02-48-B	2120	1477	957	139.7	1658	750	98	44	31.5	A, B, D, E, F

[3] For power cable in accordance with I_N, max. ø for threaded connection, [7] Weight of pressure shroud

Wilo-Sub TWI 4.03..-B (1~230 V)

Pump curves Wilo-Sub TWI 4.03..-B (1~230 V)

Minimum Efficiency Index (MEI): ≥ 0.7

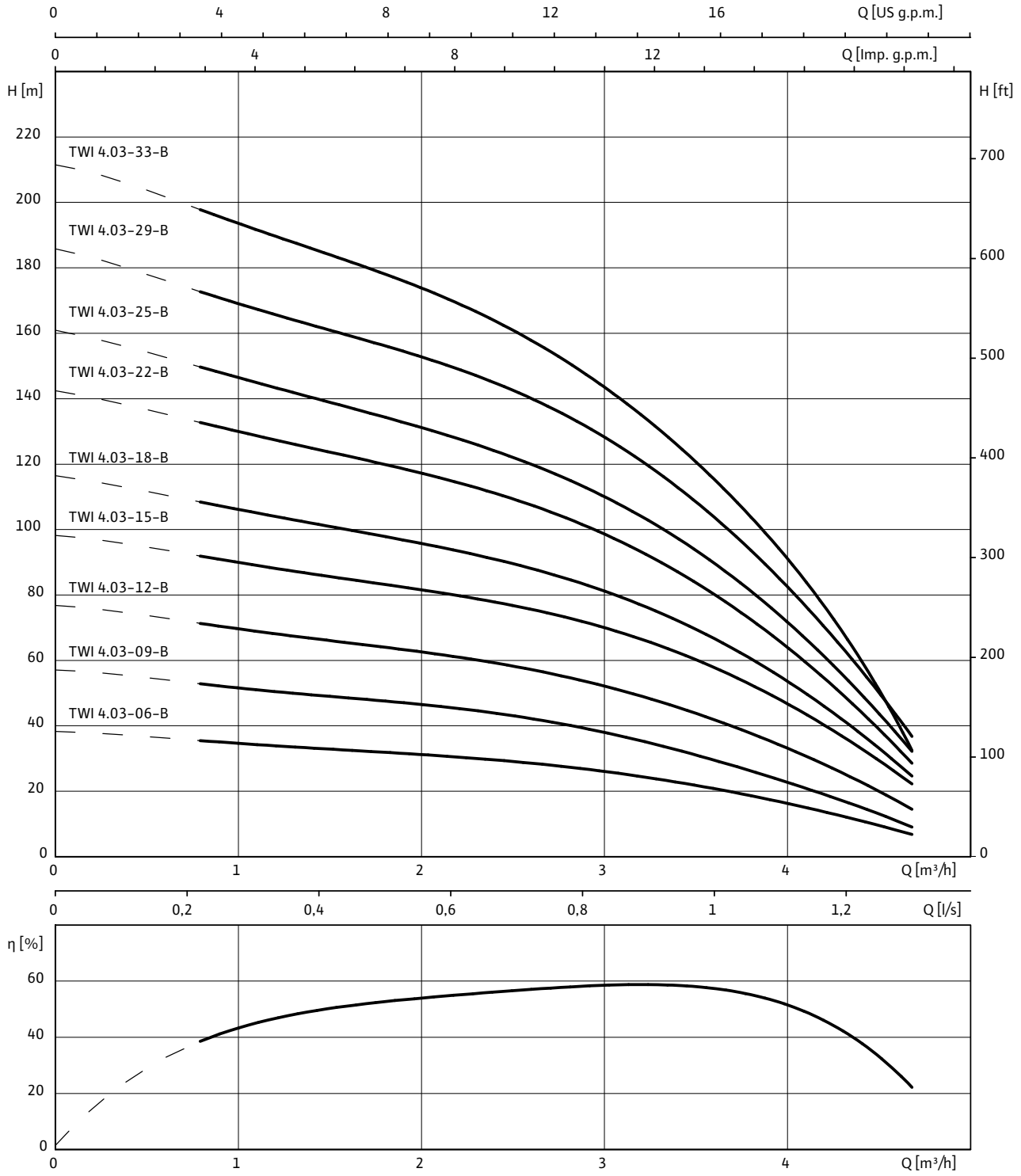

1~230 V, 50 Hz, p = 1 kg/dm^3, ν = 1x10^{-6} m^2/s, ISO 9906 Annex A, η = pump efficiency

Raw water intake

Single pumps

Wilo-Sub TWI 4.03..-B (1~230 V)

Motor data

Wilo-Sub...	Mains connection	Motor diameter	Nominal motor power	Nominal current	Length of connecting cable	Cable cross-section
		Ø	P_2	I_N		
		"	kW	A	m	mm^2
TWI 4.03-06-B	1~230 V, 50 Hz	4	0.55	4.3	2.5	4G1.5
TWI 4.03-09-B	1~230 V, 50 Hz	4	0.75	5.7	2.5	4G1.5
TWI 4.03-12-B	1~230 V, 50 Hz	4	1.1	8.6	2.5	4G1.5
TWI 4.03-15-B	1~230 V, 50 Hz	4	1.1	8.6	2.5	4G1.5
TWI 4.03-18-B	1~230 V, 50 Hz	4	1.5	10.6	2.5	4G1.5
TWI 4.03-22-B	1~230 V, 50 Hz	4	1.5	10.6	2.5	4G1.5
TWI 4.03-25-B	1~230 V, 50 Hz	4	2.2	15.5	2.5	4G1.5
TWI 4.03-29-B	1~230 V, 50 Hz	4	2.2	15.5	2.5	4G1.5
TWI 4.03-33-B	1~230 V, 50 Hz	4	2.2	15.5	2.5	4G1.5

Flange dimensions

Wilo-Sub...	Connection			Pressure class			Dimensions		
	DN1	*DN2*	*DN3*	PN_1	PN_2	PN_3	*D2*	*K*	*D*
	mm			bar			mm		
TWI 4.03...	Rp 1¼	–	–	10-40	–	–	–	–	–
TWI 4.03...	–	DN 50	DN 50	–	10-40	10	4x18	125	165

[3)] For power cable in accordance with I_N, max. ø for threaded connection, [7)] Weight of pressure shroud

Information for order placements

Wilo-Sub...	Mains connection	🚚	Art no.	Art. no. for cooling jacket pipe	
				for vertical installation (B)	*for horizontal installation (D)*
TWI 4.03-06-B	1~230 V, 50 Hz	L	6042696	4064430	6037935
TWI 4.03-09-B	1~230 V, 50 Hz	L	6042697	4064430	6037935
TWI 4.03-12-B	1~230 V, 50 Hz	L	6042698	4064431	6037937
TWI 4.03-15-B	1~230 V, 50 Hz	L	6042699	4064431	6037936
TWI 4.03-18-B	1~230 V, 50 Hz	L	6042900	4064431	6037936
TWI 4.03-22-B	1~230 V, 50 Hz	L	6042901	4064431	6037936
TWI 4.03-25-B	1~230 V, 50 Hz	L	6042902	4064431	6037936
TWI 4.03-29-B	1~230 V, 50 Hz	K	6042903	4064431	6037936
TWI 4.03-33-B	1~230 V, 50 Hz	A	6042904	4064431	6037936

🚚= ready for delivery, L = stock article, C = order-specific production approx. 2 weeks, K = order-specific production approx. 4 weeks, A = delivery time on request

Wilo-Sub TWI 4.03..-B (1~230 V)

Dimension drawing Wilo-Sub TWI 4.03

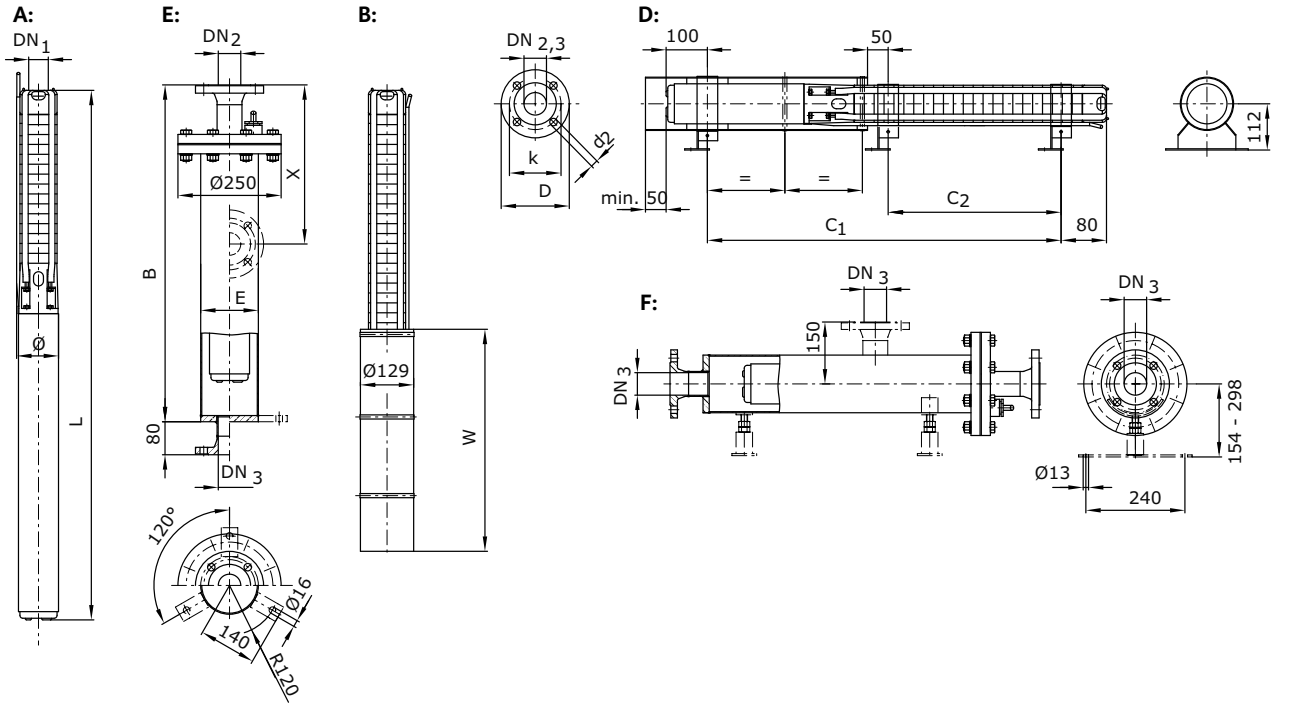

A = vertical, B = vertical with cooling jacket, D = horizontal with cooling jacket, E = vertical with pressure shroud, F = horizontal with pressure shroud

Dimensions, weights

Wilo-Sub...	Dimensions							Weight	Weight of unit	Installation
	B	*C1*	*C2*	*E*	*L*	*W*	*ø* [3]	*Jacket*[7]	*m*	
	mm							kg		
TWI 4.03-06-B	920	371	–	139.7	564	500	98	33	12	A, B, D, E, F
TWI 4.03-09-B	920	462	–	139.7	655	500	98	33	13.8	A, B, D, E, F
TWI 4.03-12-B	1220	582	–	139.7	746	750	98	36	15.7	A, B, D, E, F
TWI 4.03-15-B	1220	645	229	139.7	809	750	98	36	16.3	A, B, D, E, F
TWI 4.03-18-B	1220	736	292	139.7	901	750	98	36	18.2	A, B, D, E, F
TWI 4.03-22-B	1520	820	376	139.7	985	750	98	38	19	A, B, D, E, F
TWI 4.03-25-B	1520	959	439	139.7	1152	750	98	38	24.1	A, B, D, E, F
TWI 4.03-29-B	1520	1043	523	139.7	1236	750	98	38	24.8	A, B, D, E, F
TWI 4.03-33-B	1820	1127	607	139.7	1343	750	98	41	27.7	A, B, D, E, F

[3] For power cable in accordance with I_N, max. ø for threaded connection, [7] Weight of pressure shroud

Wilo-Sub TWI 4.05..-B (1~230 V)

Pump curves Wilo-Sub TWI 4.05..-B (1~230 V)

Minimum Efficiency Index (MEI): ≥ 0.4

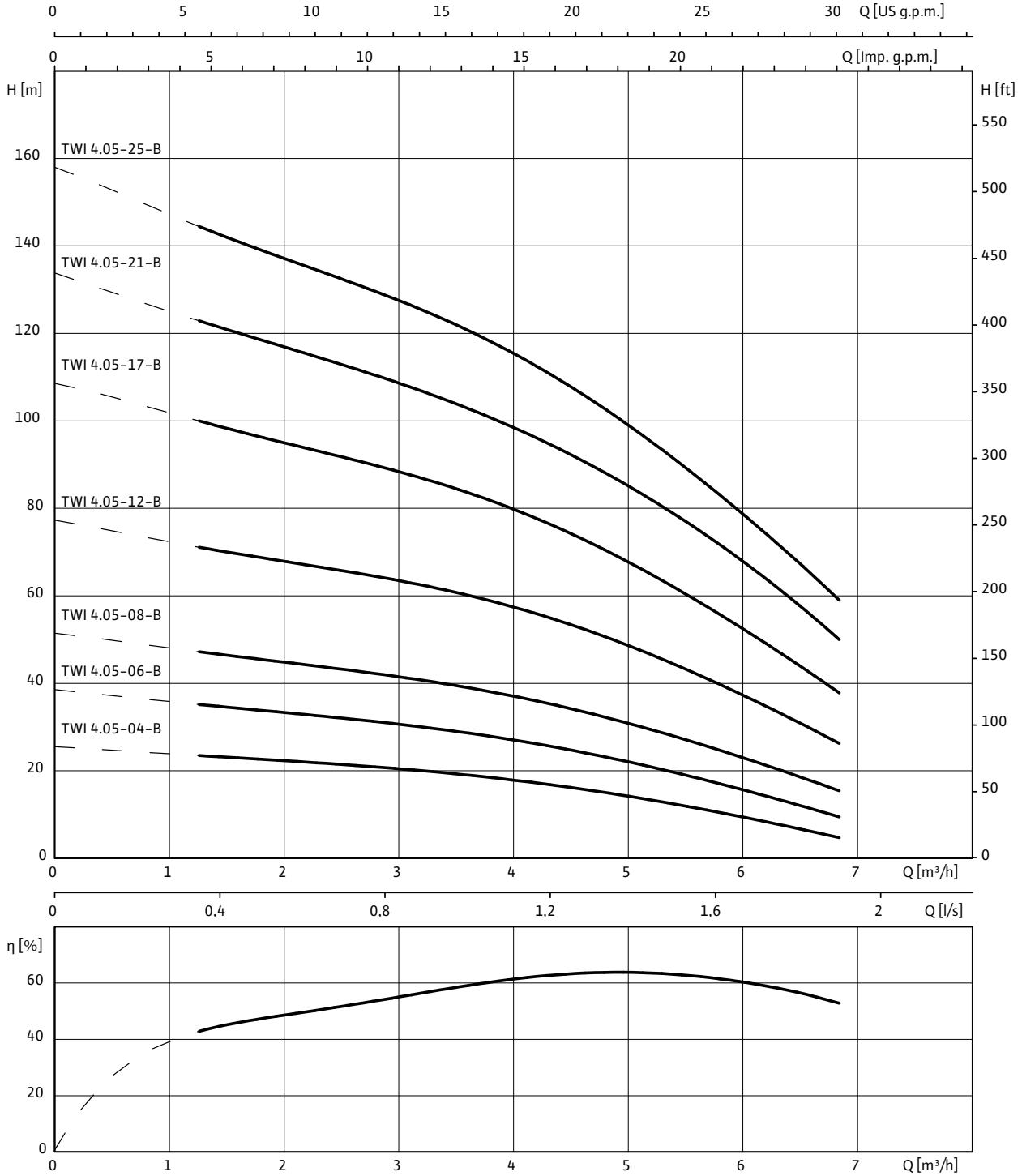

1~230 V, 50 Hz, p = 1 kg/dm^3, v = 1x10^{-6} m^2/s, ISO 9906 Annex A, η = pump efficiency

Wilo-Sub TWI 4.05..-B (1~230 V)

Motor data

Wilo-Sub...	Mains connection	Motor diameter	Nominal motor power	Nominal current	Length of connecting cable	Cable cross-section
		Ø	P_2	I_N		
		"	kW	A	m	mm^2
TWI 4.05-04-B	1~230 V, 50 Hz	4	0.55	4.3	2.5	4G1.5
TWI 4.05-06-B	1~230 V, 50 Hz	4	0.55	4.3	2.5	4G1.5
TWI 4.05-08-B	1~230 V, 50 Hz	4	0.75	5.7	2.5	4G1.5
TWI 4.05-12-B	1~230 V, 50 Hz	4	1.5	10.6	2.5	4G1.5
TWI 4.05-17-B	1~230 V, 50 Hz	4	2.2	15.5	2.5	4G1.5
TWI 4.05-21-B	1~230 V, 50 Hz	4	2.2	15.5	2.5	4G1.5
TWI 4.05-25-B	1~230 V, 50 Hz	4	2.2	15.5	2.5	4G1.5

Flange dimensions

Wilo-Sub...	Connection			Pressure class			Dimensions		
	DN1	*DN2*	*DN3*	PN_1	PN_2	PN_3	*D2*	*K*	*D*
	mm			bar			mm		
TWI 4.05...	Rp 1½	–	–	10-40	–	–	–	–	–
TWI 4.05...	–	DN 50	DN 50	–	10-40	10	4x18	125	165

Information for order placements

Wilo-Sub...	Mains connection	🚚	Art no.	Art. no. for cooling jacket pipe	
				for vertical installation (B)	*for horizontal installation (D)*
TWI 4.05-04-B	1~230 V, 50 Hz	L	6042905	4064430	6037935
TWI 4.05-06-B	1~230 V, 50 Hz	L	6043573	4064430	6037935
TWI 4.05-08-B	1~230 V, 50 Hz	L	6042906	4064430	6037935
TWI 4.05-12-B	1~230 V, 50 Hz	L	6043574	4064431	6037937
TWI 4.05-17-B	1~230 V, 50 Hz	L	6042907	4064431	6037937
TWI 4.05-21-B	1~230 V, 50 Hz	L	6042908	4064431	6037936
TWI 4.05-25-B	1~230 V, 50 Hz	L	6042909	4064431	6037936

🚚= ready for delivery, L = stock article, C = order-specific production approx. 2 weeks, K = order-specific production approx. 4 weeks, A = delivery time on request

Raw water intake

Single pumps

Wilo-Sub TWI 4.05..-B (1~230 V)

Dimension drawing Wilo-Sub TWI 4.05

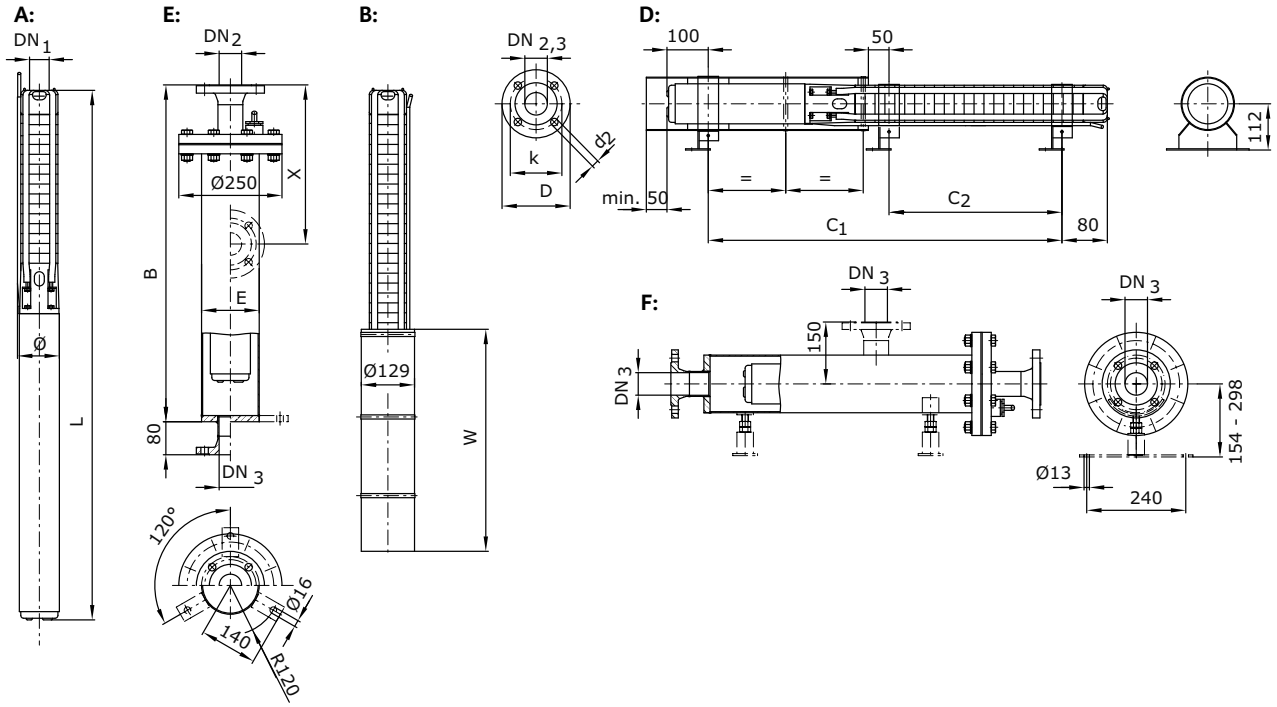

A = vertical, B = vertical with cooling jacket, D = horizontal with cooling jacket, E = vertical with pressure shroud, F = horizontal with pressure shroud

Dimensions, weights

Wilo-Sub...	Dimensions							Weight	Weight of unit	Installation
	B	*C1*	*C2*	*E*	*L*	*W*	*ø* [3]	*Jacket*[7]	*m*	
	mm							kg		
TWI 4.05-04-B	920	329	–	139.7	522	500	98	33	11.6	A, B, D, E, F
TWI 4.05-06-B	920	371	–	139.7	564	500	98	33	12	A, B, D, E, F
TWI 4.05-08-B	920	441	–	139.7	634	500	98	33	13.6	A, B, D, E, F
TWI 4.05-12-B	1220	610	–	139.7	775	750	98	36	17.1	A, B, D, E, F
TWI 4.05-17-B	1220	791	–	139.7	984	750	98	36	22.5	A, B, D, E, F
TWI 4.05-21-B	1520	875	355	139.7	1068	750	98	38	23.3	A, B, D, E, F
TWI 4.05-25-B	1520	959	439	139.7	1152	750	98	38	24	A, B, D, E, F

[3] For power cable in accordance with I_N, max. ø for threaded connection, [7] Weight of pressure shroud

Wilo-Sub TWI 4.09..-B (1~230 V)

Pump curves Wilo-Sub TWI 4.09..-B (1~230 V)

Minimum Efficiency Index (MEI): ≥ 0.4

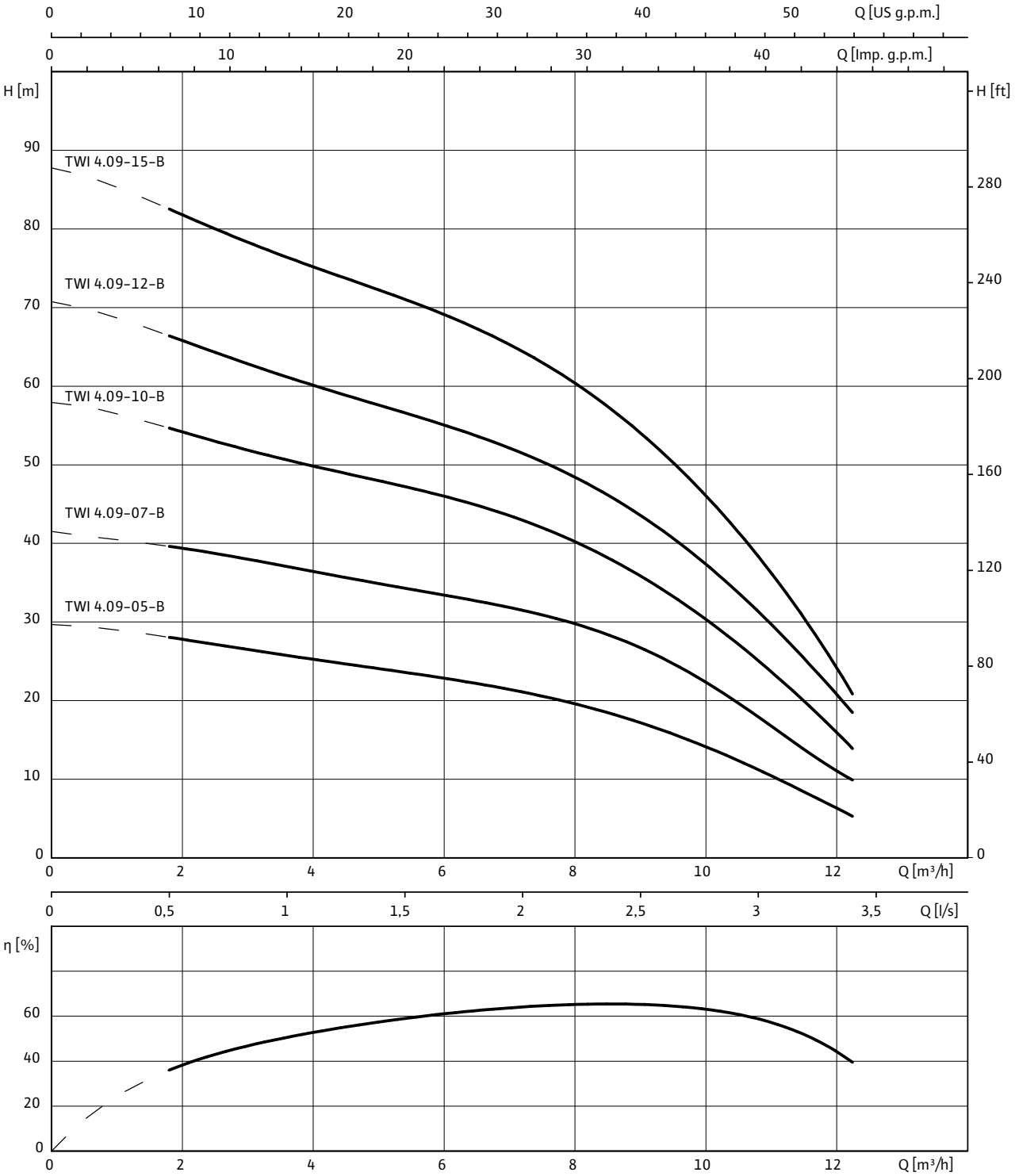

1~230 V, 50 Hz, p = 1 kg/dm^3, ν = 1x10^{-6} m^2/s, ISO 9906 Annex A, η = pump efficiency

Raw water intake

Single pumps

Wilo-Sub TWI 4.09..-B (1~230 V)

Motor data						
Wilo-Sub...	**Mains connection**	**Motor diameter**	**Nominal motor power**	**Nominal current**	**Length of connecting cable**	**Cable cross-section**
		Ø	P_2	I_N		
		"	kW	A	m	mm^2
TWI 4.09-05-B	1~230 V, 50 Hz	4	1.1	8.6	2.5	4G1.5
TWI 4.09-07-B	1~230 V, 50 Hz	4	1.1	8.6	2.5	4G1.5
TWI 4.09-10-B	1~230 V, 50 Hz	4	1.5	10.6	2.5	4G1.5
TWI 4.09-12-B	1~230 V, 50 Hz	4	2.2	15.5	2.5	4G1.5
TWI 4.09-15-B	1~230 V, 50 Hz	4	2.2	15.5	2.5	4G1.5

Flange dimensions									
Wilo-Sub...	**Connection**			**Pressure class**			**Dimensions**		
	DN1	*DN2*	*DN3*	PN_1	PN_2	PN_3	*D2*	*K*	*D*
	mm			bar			mm		
TWI 4.09...	Rp 2	–	–	10-40	–	–	–	–	–
TWI 4.09...	–	DN 50	DN 50	–	10-40	10	4x18	125	165

Information for order placements					
Wilo-Sub...	**Mains connection**	🚚	**Art no.**	**Art. no. for cooling jacket pipe**	
				for vertical installation (B)	*for horizontal installation (D)*
TWI 4.09-05-B	1~230 V, 50 Hz	L	6042910	4064431	6037937
TWI 4.09-07-B	1~230 V, 50 Hz	L	6042911	4064431	6037937
TWI 4.09-10-B	1~230 V, 50 Hz	L	6042912	4064431	6037936
TWI 4.09-12-B	1~230 V, 50 Hz	L	6043575	4064431	6037936
TWI 4.09-15-B	1~230 V, 50 Hz	L	6042913	4064431	6037936

🚚= ready for delivery, L = stock article, C = order-specific production approx. 2 weeks, K = order-specific production approx. 4 weeks, A = delivery time on request

Wilo-Sub TWI 4.09..-B (1~230 V)

Dimension drawing Wilo-Sub TWI 4.09

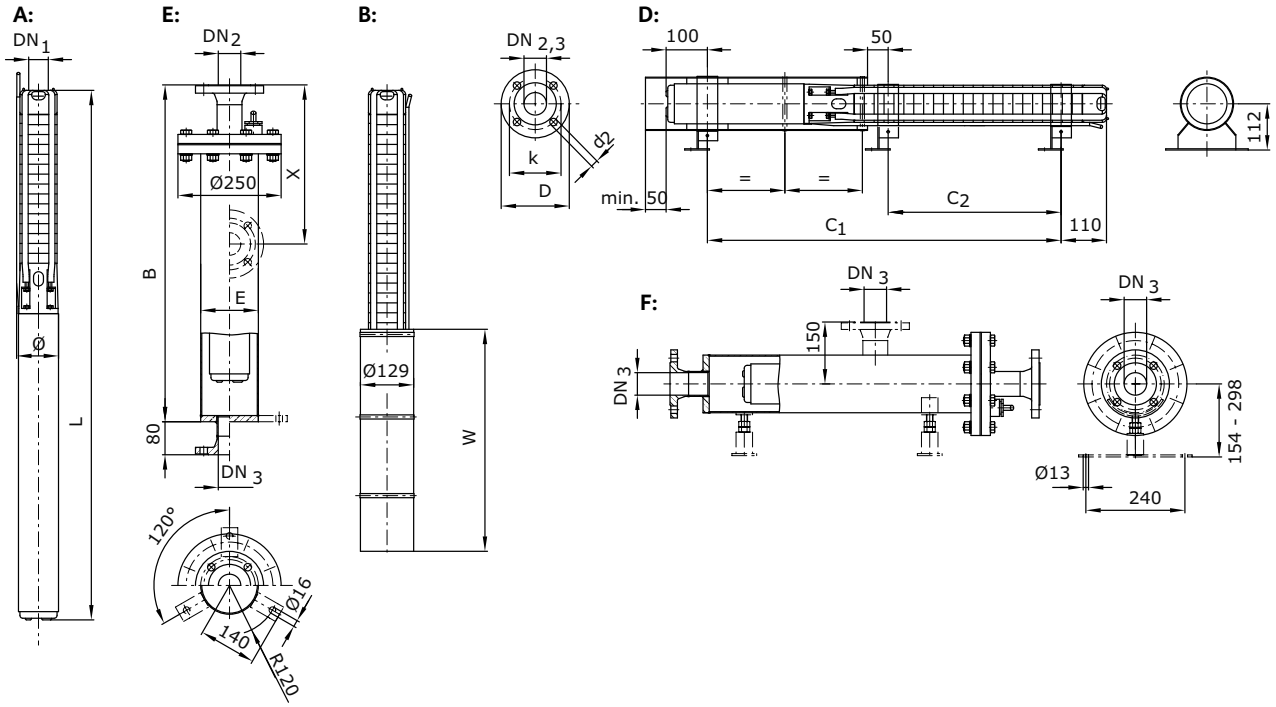

A = vertical, B = vertical with cooling jacket, D = horizontal with cooling jacket, E = vertical with pressure shroud, F = horizontal with pressure shroud

Dimensions, weights

Wilo-Sub...	Dimensions							Weight	Weight of unit	Installation
	B	*C1*	*C2*	*E*	*L*	*W*	*ø* [3]	*Jacket*[7]	*m*	
	mm							kg		
TWI 4.09-05-B	1220	553	–	139.7	742	750	98	36	16.4	A, B, D, E, F
TWI 4.09-07-B	1220	637	–	139.7	823	750	98	36	17.4	A, B, D, E, F
TWI 4.09-10-B	1520	791	292	139.7	978	750	98	38	20.3	A, B, D, E, F
TWI 4.09-12-B	1520	951	376	139.7	1166	750	98	38	25.8	A, B, D, E, F
TWI 4.09-15-B	1820	1077	502	139.7	1292	750	98	41	27.3	A, B, D, E, F

[3] For power cable in accordance with I_N, max. ø for threaded connection, [7] Weight of pressure shroud

Wilo-Sub TWI 4.14..-B (1~230 V)

Pump curves Wilo-Sub TWI 4.14..-B (1~230 V)

Minimum Efficiency Index (MEI): ≥ 0.1

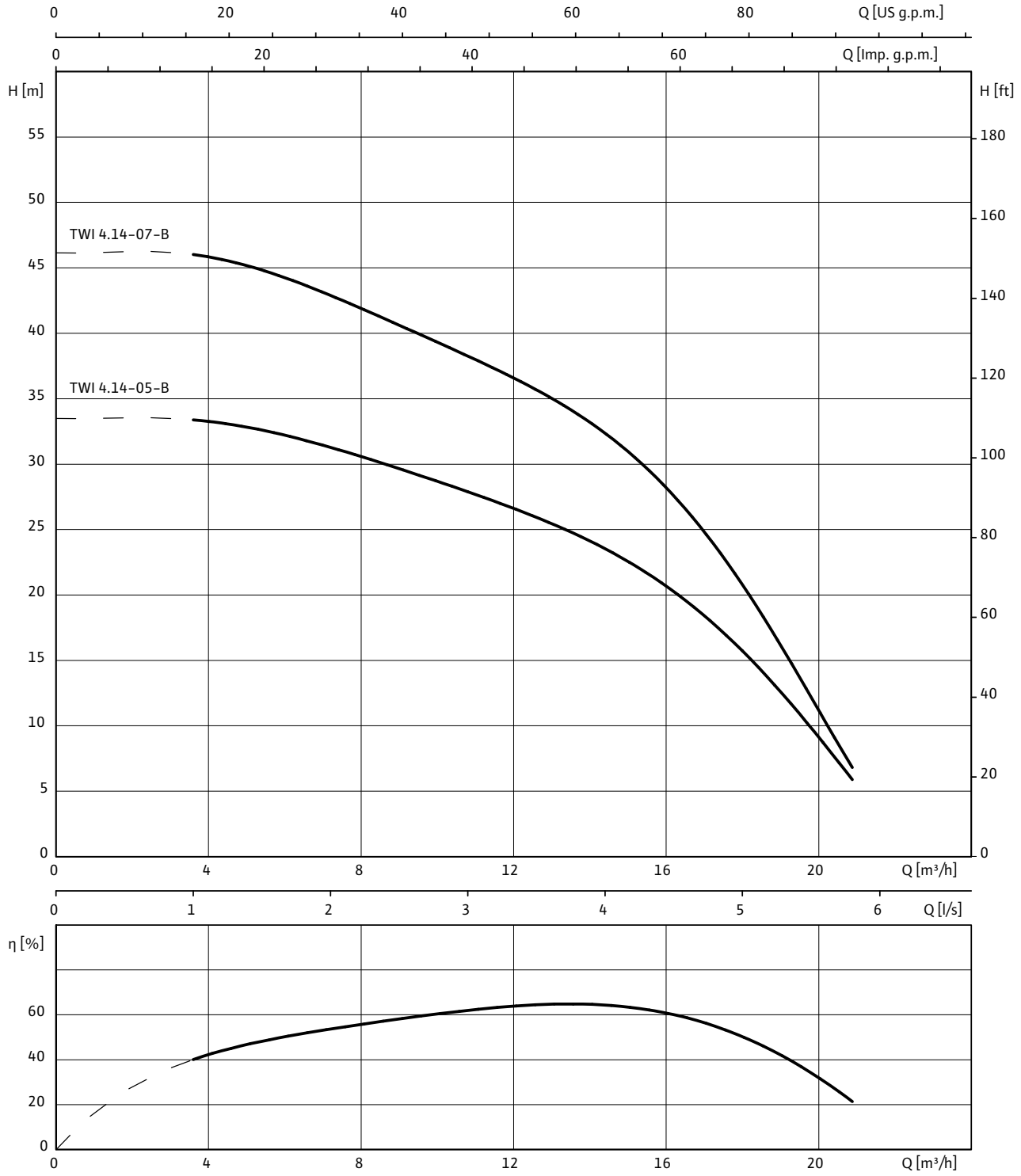

1~230 V, 50 Hz, p = 1 kg/dm^3, v = 1x10^{-6} m^2/s, ISO 9906 Annex A, η = pump efficiency

Wilo-Sub TWI 4.14..-B (1~230 V)

Motor data						
Wilo-Sub...	**Mains connection**	**Motor diameter**	**Nominal motor power**	**Nominal current**	**Length of connecting cable**	**Cable cross-section**
		Ø	P_2	I_N		
		"	kW	A	m	mm^2
TWI 4.14-05-B	1~230 V, 50 Hz	4	2.2	15.5	2.5	4G1.5
TWI 4.14-07-B	1~230 V, 50 Hz	4	2.2	15.5	2.5	4G1.5

Flange dimensions									
Wilo-Sub...	**Connection**			**Pressure class**			**Dimensions**		
	DN1	*DN2*	*DN3*	PN_1	PN_2	PN_3	*D2*	*K*	*D*
	mm			bar			mm		
TWI 4.14...	Rp 2	–	–	10-40	–	–	–	–	–
TWI 4.14...	–	DN 50	DN 50	–	10-40	10	4x18	125	165

[3)] For power cable in accordance with I_N, max. ø for threaded connection, [7)] Weight of pressure shroud

Information for order placements					
Wilo-Sub...	**Mains connection**	🚚	**Art no.**	**Art. no. for cooling jacket pipe**	
				for vertical installation (B)	*for horizontal installation (D)*
TWI 4.14-05-B	1~230 V, 50 Hz	L	6042914	4064431	6037937
TWI 4.14-07-B	1~230 V, 50 Hz	L	6042915	4064431	6037937

🚚= ready for delivery, L = stock article, C = order-specific production approx. 2 weeks, K = order-specific production approx. 4 weeks, A = delivery time on request

Raw water intake

Single pumps

Wilo-Sub TWI 4.14..-B (1~230 V)

Dimension drawing Wilo-Sub TWI 4.14

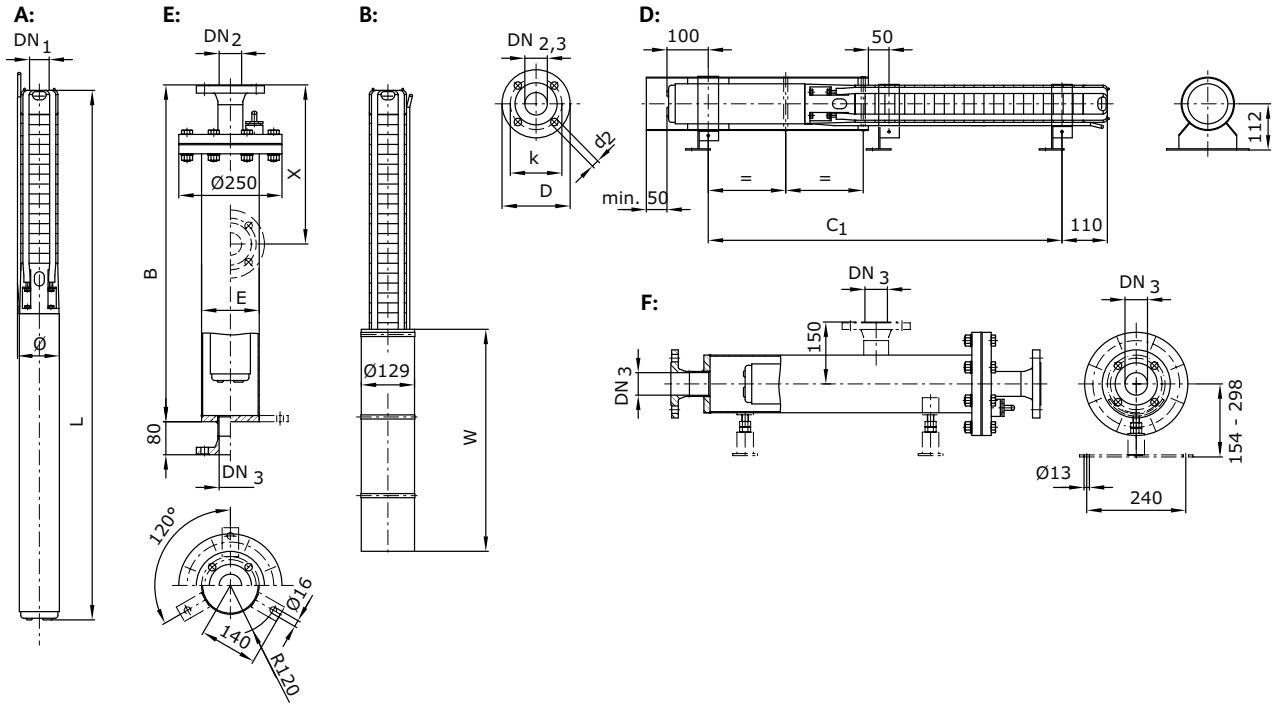

A = vertical, B = vertical with cooling jacket, D = horizontal with cooling jacket, E = vertical with pressure shroud, F = horizontal with pressure shroud

Dimensions, weights									
Wilo-Sub...	**Dimensions**						**Weight**	**Weight of unit**	**Installation**
	B	*C1*	*E*	*L*	*W*	*ø* [3]	*Jacket*[7]	*m*	
	mm						kg		
TWI 4.14-05-B	1220	756	139.7	965	750	98	36	23	A, B, D, E, F
TWI 4.14-07-B	1520	886	139.7	1095	750	98	38	24.3	A, B, D, E, F

[3] For power cable in accordance with I_N, max. ø for threaded connection, [7] Weight of pressure shroud

Wilo-Sub TWI 4.01..-B

Pump curves Wilo-Sub TWI 4.01..-B

Minimum Efficiency Index (MEI): ≥ 0.7

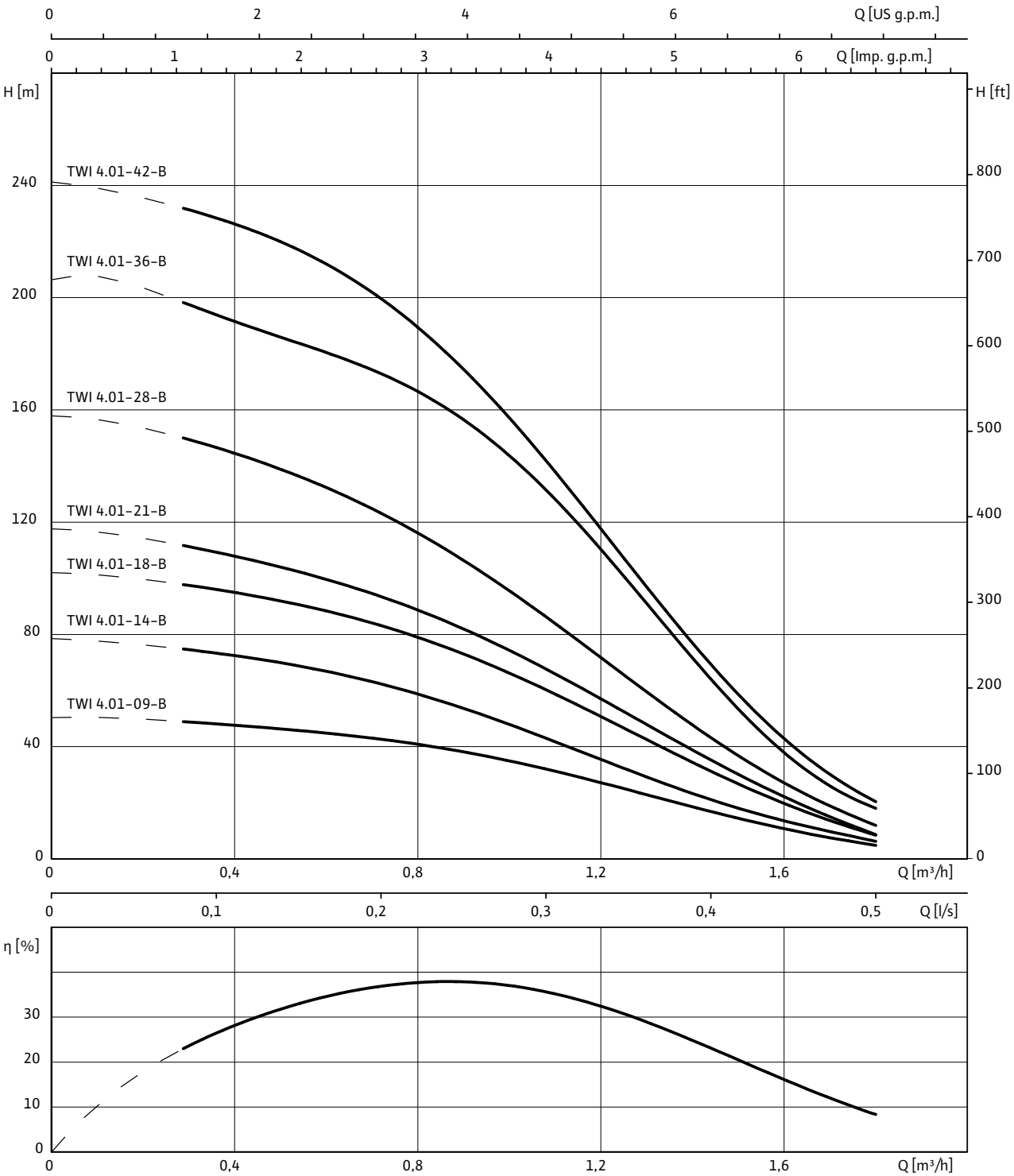

3~400 V, 50 Hz, p = 1 kg/dm^3, ν = 1x10^{-6} m^2/s, ISO 9906 Annex A, η = pump efficiency

Raw water intake

Single pumps

Wilo-Sub TWI 4.01..-B

Motor data

Wilo-Sub...	Mains connection	Motor diameter	Nominal motor power	Nominal current	Length of connecting cable	Cable cross-section
		Ø	*P_2*	*I_N*		
		"	kW	A	m	mm^2
TWI 4.01-09-B	3~400 V, 50 Hz	4	0.37	1.1	2.5	4G1.5
TWI 4.01-14-B	3~400 V, 50 Hz	4	0.55	1.6	2.5	4G1.5
TWI 4.01-18-B	3~400 V, 50 Hz	4	0.55	1.6	2.5	4G1.5
TWI 4.01-21-B	3~400 V, 50 Hz	4	0.75	2.1	2.5	4G1.5
TWI 4.01-28-B	3~400 V, 50 Hz	4	1.1	3	2.5	4G1.5
TWI 4.01-36-B	3~400 V, 50 Hz	4	1.1	3	2.5	4G1.5
TWI 4.01-42-B	3~400 V, 50 Hz	4	1.5	4	2.5	4G1.5

Flange dimensions

Wilo-Sub...	Connection			Pressure class			Dimensions		
	DN1	*DN2*	*DN3*	*PN_1*	*PN_2*	*PN_3*	*D2*	*K*	*D*
	mm			bar			mm		
TWI 4.01...	Rp 1¼	–	–	10-40	–	–	–	–	–
TWI 4.01...	–	DN 50	DN 50	–	10-40	10	4x18	125	165

[3)] For power cable in accordance with I_N, max. ø for threaded connection, [7)] Weight of pressure shroud

Information for order placements

Wilo-Sub...	Mains connection	🚚	Art no.	Art. no. for cooling jacket pipe	
				for vertical installation (B)	*for horizontal installation (D)*
TWI 4.01-09-B	3~400 V, 50 Hz	L	6043546	4064430	6037935
TWI 4.01-14-B	3~400 V, 50 Hz	L	6043547	4064430	6038901
TWI 4.01-18-B	3~400 V, 50 Hz	K	6043548	4064430	6038901
TWI 4.01-21-B	3~400 V, 50 Hz	K	6043549	4064430	6038901
TWI 4.01-28-B	3~400 V, 50 Hz	A	6043550	4064430	6038901
TWI 4.01-36-B	3~400 V, 50 Hz	A	6043551	4064430	6038901
TWI 4.01-42-B	3~400 V, 50 Hz	A	6043552	4064430	6038901

🚚= ready for delivery, L = stock article, C = order-specific production approx. 2 weeks, K = order-specific production approx. 4 weeks, A = delivery time on request

Wilo-Sub TWI 4.01..-B

Dimension drawing Wilo-Sub TWI 4.01

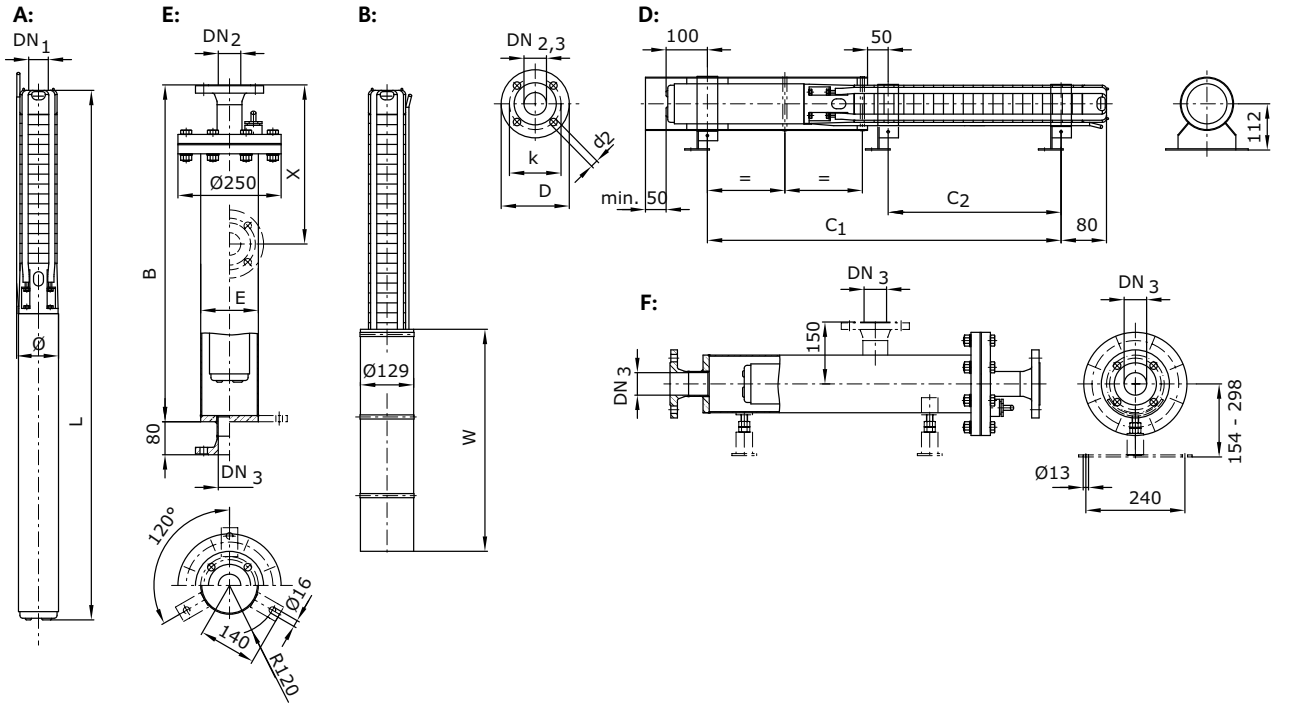

A = vertical, B = vertical with cooling jacket, D = horizontal with cooling jacket, E = vertical with pressure shroud, F = horizontal with pressure shroud

Dimensions, weights

Wilo-Sub...	Dimensions							Weight	Weight of unit	Installation
	B	*C1*	*C2*	*E*	*L*	*W*	*ø* [3]	*Jacket*[7]	*m*	
	mm							kg		
TWI 4.01-09-B	920	393	–	139.7	586	500	98	33	10.8	A, B, D, E, F
TWI 4.01-14-B	1220	539	230	139.7	710	500	98	36	12.5	A, B, D, E, F
TWI 4.01-18-B	1220	633	324	139.7	794	500	98	36	13.2	A, B, D, E, F
TWI 4.01-21-B	1220	692	355	139.7	885	500	98	36	15	A, B, D, E, F
TWI 4.01-28-B	1520	867	502	139.7	1060	500	98	38	17.6	A, B, D, E, F
TWI 4.01-36-B	1520	1070	705	139.7	1251	500	98	38	21.3	A, B, D, E, F
TWI 4.01-42-B	1820	1225	831	139.7	1406	500	98	41	23.9	A, B, D, E, F

[3] For power cable in accordance with I_N, max. ø for threaded connection, [7] Weight of pressure shroud

Wilo-Sub TWI 4.02..-B

Pump curves Wilo-Sub TWI 4.02..-B

Minimum Efficiency Index (MEI): ≥ 0.7

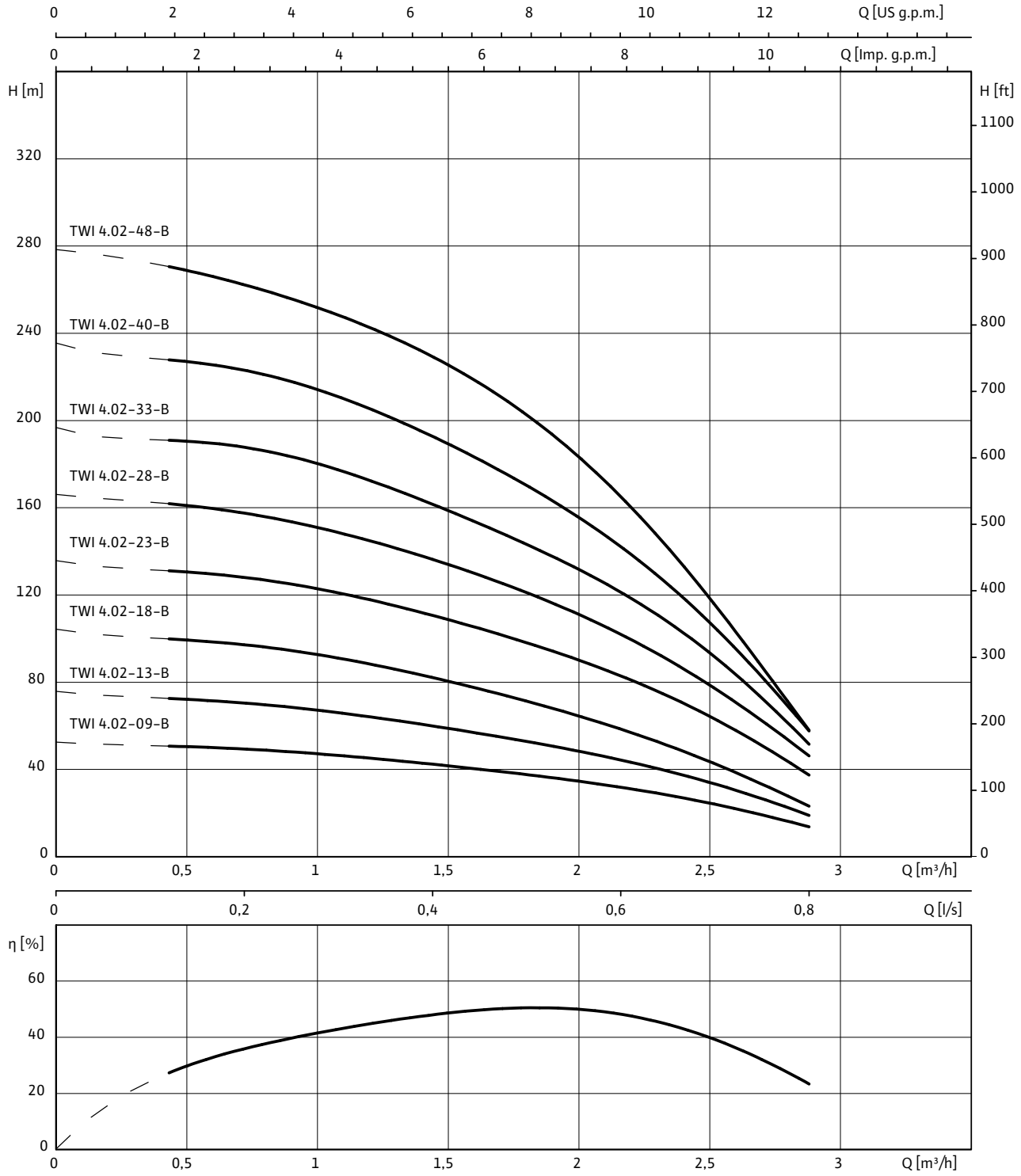

3~400 V, 50 Hz, p = 1 kg/dm^3, v = 1x10^{-6} m^2/s, ISO 9906 Annex A, η = pump efficiency

Wilo-Sub TWI 4.02..-B

Motor data

Wilo-Sub...	Mains connection	Motor diameter	Nominal motor power	Nominal current	Length of connecting cable	Cable cross-section
		Ø	P_2	I_N		
		"	kW	A	m	mm^2
TWI 4.02-09-B	3~400 V, 50 Hz	4	0.55	1.6	2.5	4G1.5
TWI 4.02-13-B	3~400 V, 50 Hz	4	0.75	2.1	2.5	4G1.5
TWI 4.02-18-B	3~400 V, 50 Hz	4	1.1	3	2.5	4G1.5
TWI 4.02-23-B	3~400 V, 50 Hz	4	1.1	3	2.5	4G1.5
TWI 4.02-28-B	3~400 V, 50 Hz	4	1.5	4	2.5	4G1.5
TWI 4.02-33-B	3~400 V, 50 Hz	4	1.5	4	2.5	4G1.5
TWI 4.02-40-B	3~400 V, 50 Hz	4	2.2	5.9	2.5	4G1.5
TWI 4.02-48-B	3~400 V, 50 Hz	4	2.2	5.9	2.5	4G1.5

Flange dimensions

Wilo-Sub...	Connection			Pressure class			Dimensions		
	DN1	*DN2*	*DN3*	PN_1	PN_2	PN_3	*D2*	*K*	*D*
	mm			bar			mm		
TWI 4.02...	Rp 1¼	–	–	10-40	–	–	–	–	–
TWI 4.02...	–	DN 50	DN 50	–	10-40	10	4x18	125	165

Information for order placements

Wilo-Sub...	Mains connection	🚚	Art no.	Art. no. for cooling jacket pipe	
				for vertical installation (B)	*for horizontal installation (D)*
TWI 4.02-09-B	3~400 V, 50 Hz	L	6042944	4064430	6037935
TWI 4.02-13-B	3~400 V, 50 Hz	L	6042945	4064430	6038901
TWI 4.02-18-B	3~400 V, 50 Hz	L	6042946	4064430	6038901
TWI 4.02-23-B	3~400 V, 50 Hz	K	6042947	4064430	6038901
TWI 4.02-28-B	3~400 V, 50 Hz	K	6042948	4064430	6038901
TWI 4.02-33-B	3~400 V, 50 Hz	K	6042949	4064430	6038901
TWI 4.02-40-B	3~400 V, 50 Hz	A	6042950	4064431	6037936
TWI 4.02-48-B	3~400 V, 50 Hz	A	6042951	4064431	6037936

🚚= ready for delivery, L = stock article, C = order-specific production approx. 2 weeks, K = order-specific production approx. 4 weeks, A = delivery time on request

Raw water intake

Single pumps

Wilo-Sub TWI 4.02..-B

Dimension drawing Wilo-Sub TWI 4.02

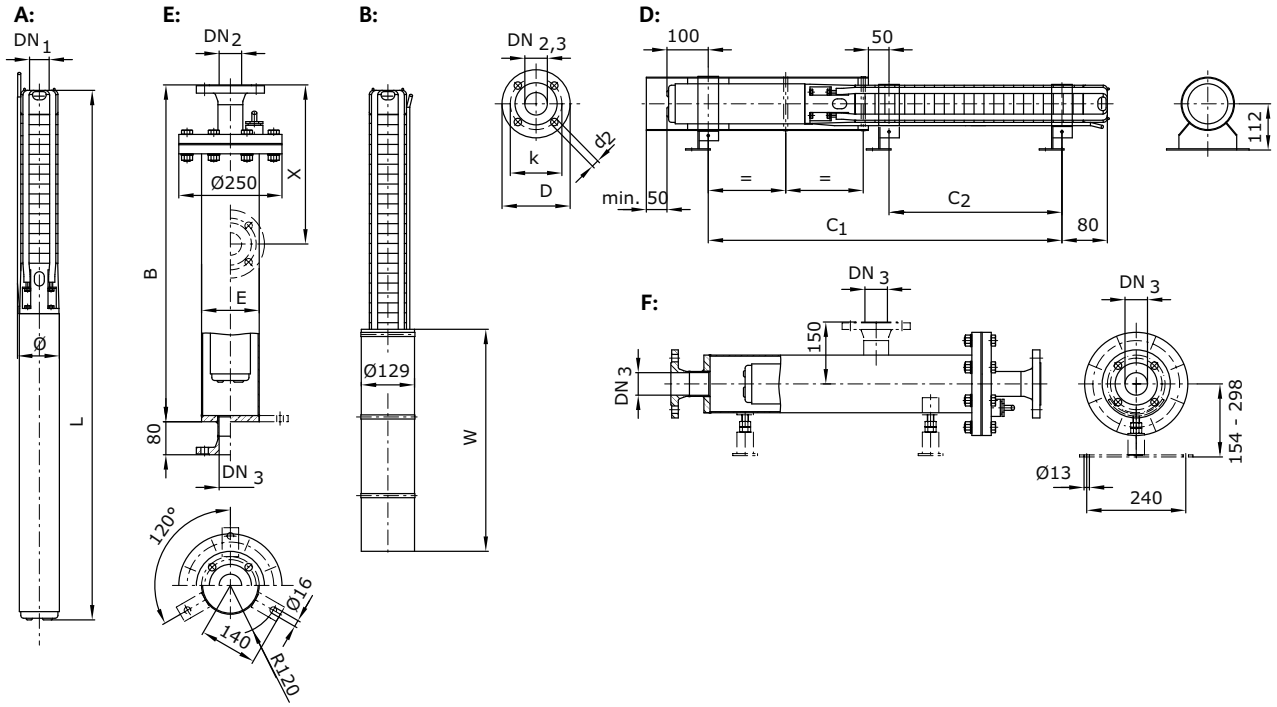

A = vertical, B = vertical with cooling jacket, D = horizontal with cooling jacket, E = vertical with pressure shroud, F = horizontal with pressure shroud

Dimensions, weights

Wilo-Sub...	Dimensions							Weight	Weight of unit	Installation
	B	*C1*	*C2*	*E*	*L*	*W*	*ø* [3]	*Jacket*[7]	*m*	
	mm							kg		
TWI 4.02-09-B	920	434	–	139.7	605	500	98	33	11.8	A, B, D, E, F
TWI 4.02-13-B	1220	524	187	139.7	717	500	98	36	13.8	A, B, D, E, F
TWI 4.02-18-B	1220	657	292	139.7	850	500	98	36	16.1	A, B, D, E, F
TWI 4.02-23-B	1220	762	397	139.7	955	500	98	36	17.1	A, B, D, E, F
TWI 4.02-28-B	1520	896	502	139.7	1089	500	98	38	19.2	A, B, D, E, F
TWI 4.02-33-B	1520	1001	607	139.7	1217	500	98	38	22.3	A, B, D, E, F
TWI 4.02-40-B	1820	1211	789	139.7	1392	750	98	41	25.5	A, B, D, E, F
TWI 4.02-48-B	1820	1379	957	139.7	1560	750	98	41	27.5	A, B, D, E, F

[3] For power cable in accordance with I_N, max. ø for threaded connection, [7] Weight of pressure shroud

Wilo-Sub TWI 4.03..-B

Pump curves Wilo-Sub TWI 4.03..-B

Minimum Efficiency Index (MEI): ≥ 0.7

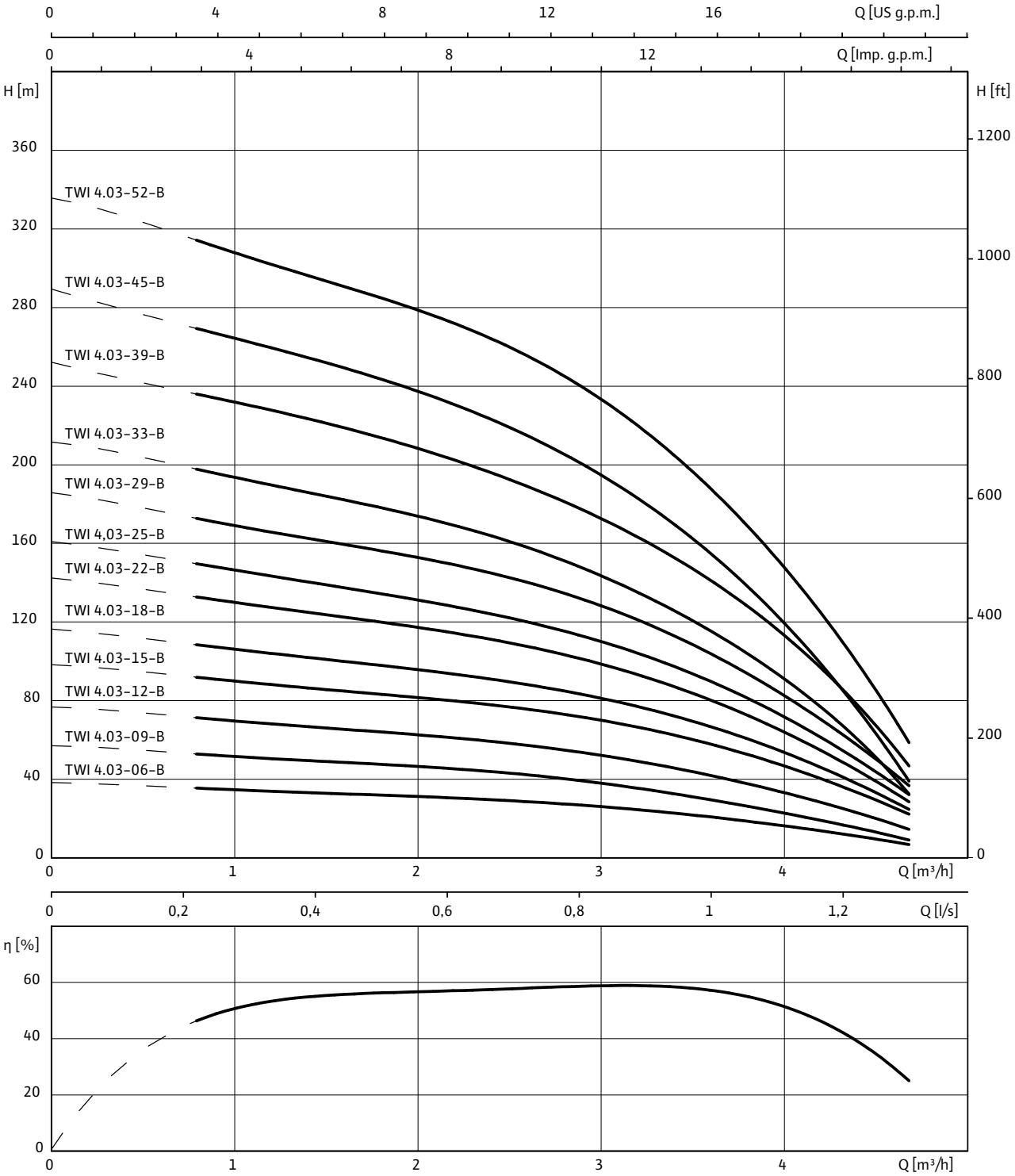

3~400 V, 50 Hz, p = 1 kg/dm^3, ν = 1x10^{-6} m^2/s, ISO 9906 Annex A, η = pump efficiency

Raw water intake

Single pumps

Wilo-Sub TWI 4.03..-B

Motor data

Wilo-Sub...	Mains connection	Motor diameter	Nominal motor power	Nominal current	Length of connecting cable	Cable cross-section
		Ø	P_2	I_N		
		"	kW	A	m	mm^2
TWI 4.03-06-B	3~400 V, 50 Hz	4	0.55	1.6	2.5	4G1.5
TWI 4.03-09-B	3~400 V, 50 Hz	4	0.75	2.1	2.5	4G1.5
TWI 4.03-12-B	3~400 V, 50 Hz	4	1.1	3	2.5	4G1.5
TWI 4.03-15-B	3~400 V, 50 Hz	4	1.1	3	2.5	4G1.5
TWI 4.03-18-B	3~400 V, 50 Hz	4	1.5	4	2.5	4G1.5
TWI 4.03-22-B	3~400 V, 50 Hz	4	1.5	4	2.5	4G1.5
TWI 4.03-25-B	3~400 V, 50 Hz	4	2.2	5.9	2.5	4G1.5
TWI 4.03-29-B	3~400 V, 50 Hz	4	2.2	5.9	2.5	4G1.5
TWI 4.03-33-B	3~400 V, 50 Hz	4	2.2	5.9	2.5	4G1.5
TWI 4.03-39-B	3~400 V, 50 Hz	4	3	7.8	2.5	4G1.5
TWI 4.03-45-B	3~400 V, 50 Hz	4	3	7.8	2.5	4G1.5
TWI 4.03-52-B	3~400 V, 50 Hz	4	3.7	9.1	2.5	4G1.5

Flange dimensions

Wilo-Sub...	Connection			Pressure class			Dimensions		
	DN1	*DN2*	*DN3*	PN_1	PN_2	PN_3	*D2*	*K*	*D*
	mm			bar			mm		
TWI 4.03...	Rp 1¼	–	–	10-40	–	–	–	–	–
TWI 4.03...	–	DN 50	DN 50	–	10-40	10	4x18	125	165

[3)] For power cable in accordance with I_N, max. ø for threaded connection, [7)] Weight of pressure shroud

Information for order placements

Wilo-Sub...	Mains connection	🚚	Art no.	Art. no. for cooling jacket pipe	
				for vertical installation (B)	*for horizontal installation (D)*
TWI 4.03-06-B	3~400 V, 50 Hz	L	6042952	4064430	6037935
TWI 4.03-09-B	3~400 V, 50 Hz	L	6042953	4064430	6037935
TWI 4.03-12-B	3~400 V, 50 Hz	L	6042954	4064430	6037935
TWI 4.03-15-B	3~400 V, 50 Hz	L	6042955	4064430	6038901
TWI 4.03-18-B	3~400 V, 50 Hz	L	6042956	4064430	6038901
TWI 4.03-22-B	3~400 V, 50 Hz	L	6042957	4064430	6038901
TWI 4.03-25-B	3~400 V, 50 Hz	L	6042958	4064431	6037936
TWI 4.03-29-B	3~400 V, 50 Hz	K	6042959	4064431	6037936
TWI 4.03-33-B	3~400 V, 50 Hz	A	6042960	4064431	6037936
TWI 4.03-39-B	3~400 V, 50 Hz	A	6042961	4064431	6037936
TWI 4.03-45-B	3~400 V, 50 Hz	A	6042962	4064431	6037936
TWI 4.03-52-B	3~400 V, 50 Hz	A	6042963	4064431	6037936

🚚= ready for delivery, L = stock article, C = order-specific production approx. 2 weeks, K = order-specific production approx. 4 weeks, A = delivery time on request

Wilo-Sub TWI 4.03..-B

Dimension drawing Wilo-Sub TWI 4.03

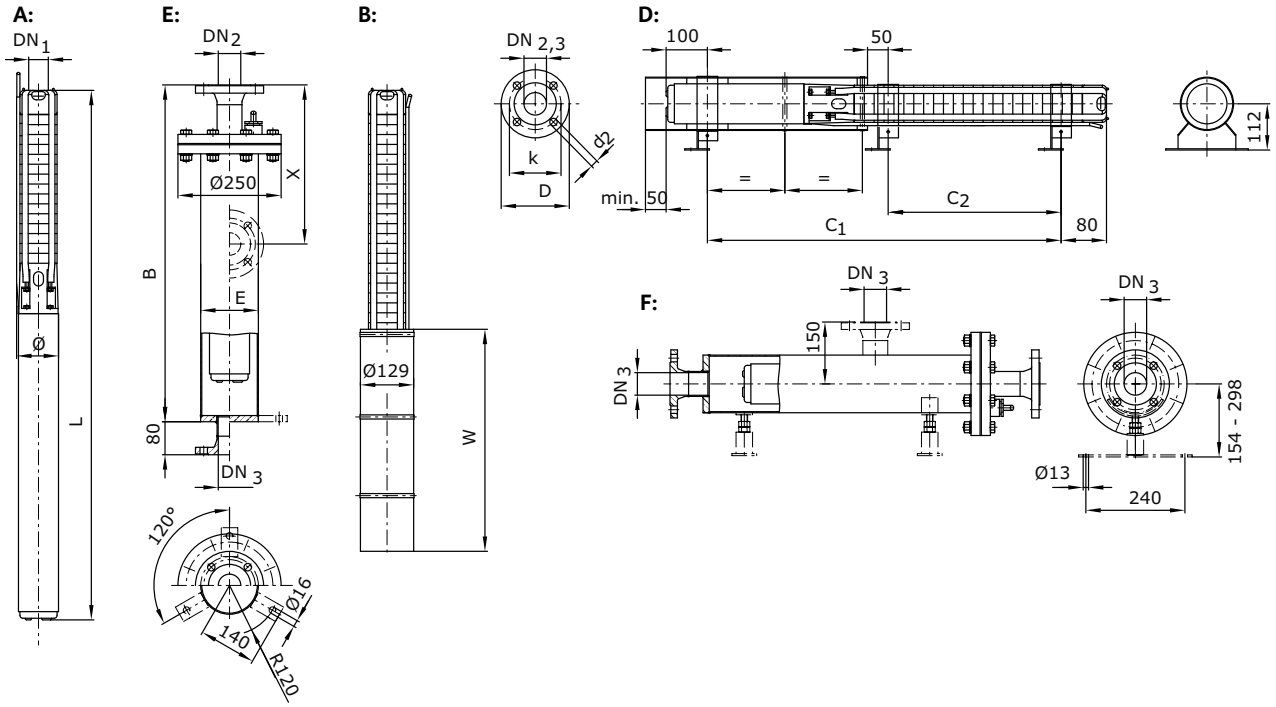

A = vertical, B = vertical with cooling jacket, D = horizontal with cooling jacket, E = vertical with pressure shroud, F = horizontal with pressure shroud

Dimensions, weights

Wilo-Sub...	Dimensions							Weight	Weight of unit	Installation
	B	*C1*	*C2*	*E*	*L*	*W*	*ø* [3]	*Jacket*[7]	*m*	
	mm							kg		
TWI 4.03-06-B	920	371	–	139.7	542	500	98	33	11.2	A, B, D, E, F
TWI 4.03-09-B	920	440	–	139.7	633	500	98	33	13	A, B, D, E, F
TWI 4.03-12-B	1220	531	–	139.7	724	500	98	36	15	A, B, D, E, F
TWI 4.03-15-B	1220	594	229	139.7	787	500	98	36	15.6	A, B, D, E, F
TWI 4.03-18-B	1220	686	292	139.7	879	500	98	36	17.3	A, B, D, E, F
TWI 4.03-22-B	1220	770	376	139.7	963	500	98	36	18.1	A, B, D, E, F
TWI 4.03-25-B	1520	861	439	139.7	1054	750	98	38	20.1	A, B, D, E, F
TWI 4.03-29-B	1520	945	523	139.7	1138	750	98	38	20.8	A, B, D, E, F
TWI 4.03-33-B	1520	1029	607	139.7	1245	750	98	38	23.7	A, B, D, E, F
TWI 4.03-39-B	1820	1327	753	139.7	1523	750	98	41	31.1	A, B, D, E, F
TWI 4.03-45-B	2120	1468	894	139.7	1649	750	98	44	32.6	A, B, D, E, F
TWI 4.03-52-B	2120	1655	1041	139.7	1834	750	98	44	37.2	A, B, D, E, F

[3] For power cable in accordance with I_N, max. ø for threaded connection, [7] Weight of pressure shroud

Wilo-Sub TWI 4.05..-B

Pump curves Wilo-Sub TWI 4.05..-B

Minimum Efficiency Index (MEI): ≥ 0.4

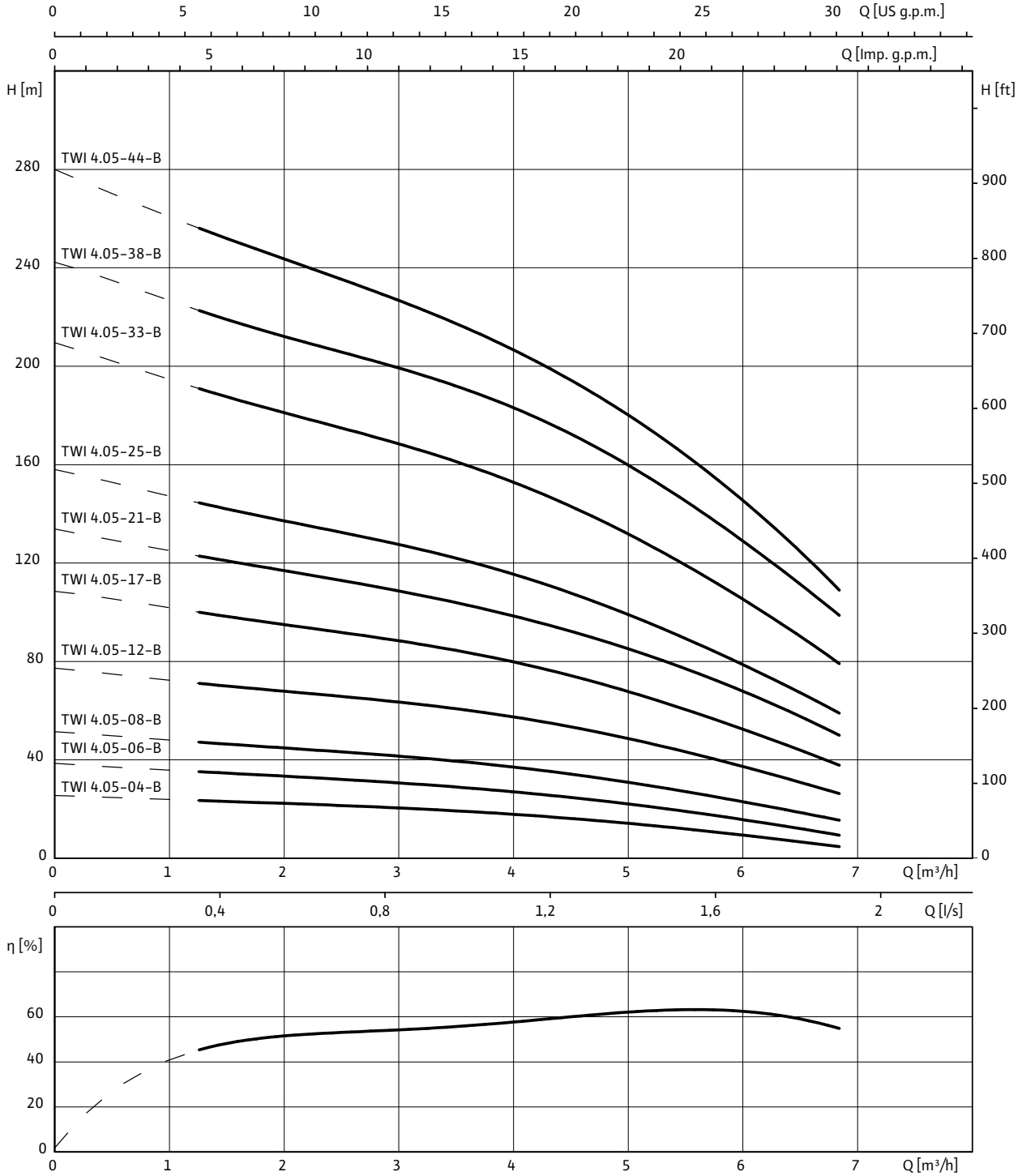

3~400 V, 50 Hz, p = 1 kg/dm^3, v = 1x10^{-6} m^2/s, ISO 9906 Annex A, η = pump efficiency

Wilo-Sub TWI 4.05..-B

Motor data

Wilo-Sub...	Mains connection	Motor diameter	Nominal motor power	Nominal current	Length of connecting cable	Cable cross-section
		Ø	P_2	I_N		
		"	kW	A	m	mm^2
TWI 4.05-04-B	3~400 V, 50 Hz	4	0.55	1.6	2.5	4G1.5
TWI 4.05-06-B	3~400 V, 50 Hz	4	0.55	1.6	2.5	4G1.5
TWI 4.05-08-B	3~400 V, 50 Hz	4	0.75	2.1	2.5	4G1.5
TWI 4.05-12-B	3~400 V, 50 Hz	4	1.5	4	2.5	4G1.5
TWI 4.05-17-B	3~400 V, 50 Hz	4	2.2	5.9	2.5	4G1.5
TWI 4.05-21-B	3~400 V, 50 Hz	4	2.2	5.9	2.5	4G1.5
TWI 4.05-25-B	3~400 V, 50 Hz	4	2.2	5.9	2.5	4G1.5
TWI 4.05-33-B	3~400 V, 50 Hz	4	3	7.8	2.5	4G1.5
TWI 4.05-38-B	3~400 V, 50 Hz	4	3.7	9.1	2.5	4G1.5
TWI 4.05-44-B	3~400 V, 50 Hz	4	4	10	2.5	4G1.5

Flange dimensions

Wilo-Sub...	Connection			Pressure class			Dimensions		
	DN1	*DN2*	*DN3*	PN_1	PN_2	PN_3	*D2*	*K*	*D*
	mm			bar			mm		
TWI 4.05...	Rp 1½	–	–	10-40	–	–	–	–	–
TWI 4.05...	–	DN 50	DN 50	–	10-40	10	4x18	125	165

[3)] For power cable in accordance with I_N, max. ø for threaded connection, [7)] Weight of pressure shroud

Information for order placements

Wilo-Sub...	Mains connection	🚚	Art no.	Art. no. for cooling jacket pipe	
				for vertical installation (B)	*for horizontal installation (D)*
TWI 4.05-04-B	3~400 V, 50 Hz	L	6042964	4064430	6037935
TWI 4.05-06-B	3~400 V, 50 Hz	L	6043553	4064430	6037935
TWI 4.05-08-B	3~400 V, 50 Hz	L	6042965	4064430	6037935
TWI 4.05-12-B	3~400 V, 50 Hz	L	6043554	4064430	6037935
TWI 4.05-17-B	3~400 V, 50 Hz	L	6042966	4064431	6037936
TWI 4.05-21-B	3~400 V, 50 Hz	L	6042967	4064431	6037936
TWI 4.05-25-B	3~400 V, 50 Hz	L	6042968	4064431	6037936
TWI 4.05-33-B	3~400 V, 50 Hz	K	6042969	4064431	6037936
TWI 4.05-38-B	3~400 V, 50 Hz	K	6042970	4064431	6037936
TWI 4.05-44-B	3~400 V, 50 Hz	K	6042971	4064431	6037936

🚚= ready for delivery, L = stock article, C = order-specific production approx. 2 weeks, K = order-specific production approx. 4 weeks, A = delivery time on request

Raw water intake

Single pumps

Wilo-Sub TWI 4.05..-B

Dimension drawing Wilo-Sub TWI 4.05

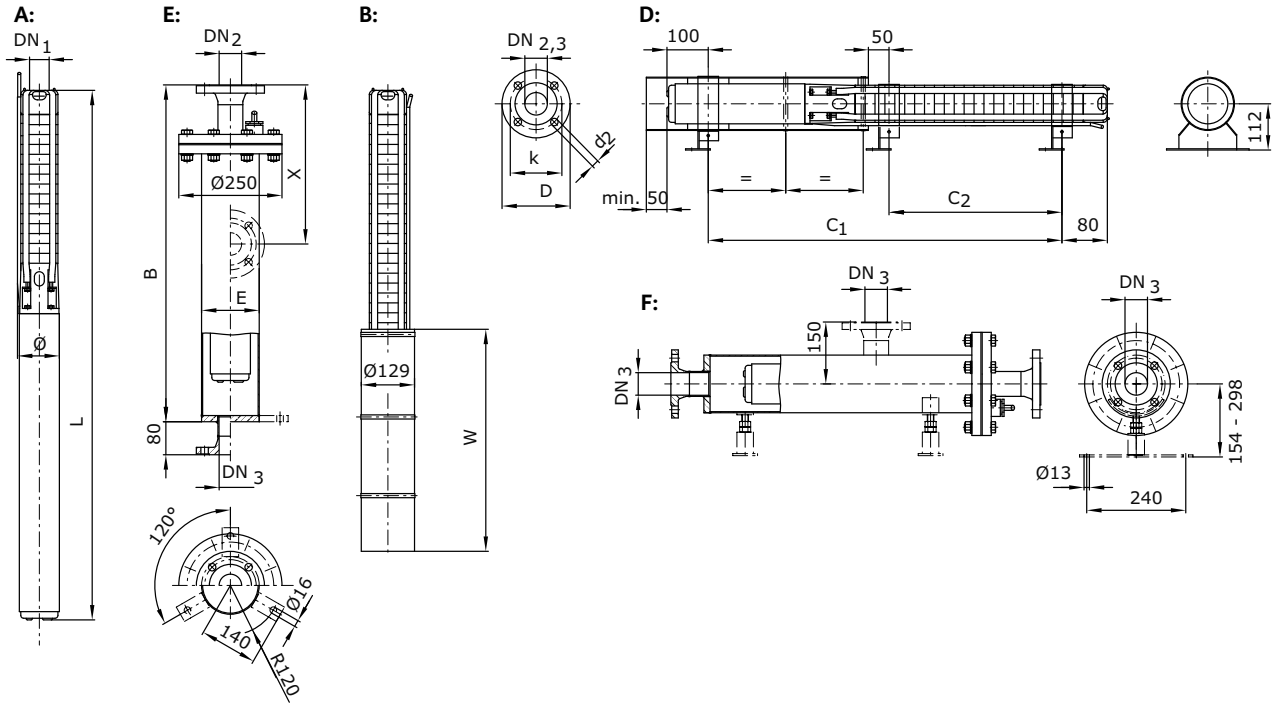

A = vertical, B = vertical with cooling jacket, D = horizontal with cooling jacket, E = vertical with pressure shroud, F = horizontal with pressure shroud

Dimensions, weights

Wilo-Sub...	Dimensions							Weight	Weight of unit	Installation
	B	*C1*	*C2*	*E*	*L*	*W*	*ø* [3]	*Jacket*[7]	*m*	
	mm							kg		
TWI 4.05-04-B	920	329	–	139.7	500	500	98	33	10.8	A, B, D, E, F
TWI 4.05-06-B	920	371	–	139.7	542	500	98	33	11.2	A, B, D, E, F
TWI 4.05-08-B	920	419	–	139.7	612	500	98	33	12.8	A, B, D, E, F
TWI 4.05-12-B	1220	560	–	139.7	753	500	98	36	16.2	A, B, D, E, F
TWI 4.05-17-B	1220	693	271	139.7	886	750	98	36	18.5	A, B, D, E, F
TWI 4.05-21-B	1220	777	355	139.7	970	750	98	36	19.3	A, B, D, E, F
TWI 4.05-25-B	1520	861	439	139.7	1054	750	98	38	20	A, B, D, E, F
TWI 4.05-33-B	1820	1181	607	139.7	1382	750	98	41	29.5	A, B, D, E, F
TWI 4.05-38-B	1820	1367	753	139.7	1525	750	98	41	33.6	A, B, D, E, F
TWI 4.05-44-B	2120	1508	858	139.7	1689	750	98	44	36.9	A, B, D, E, F

[3] For power cable in accordance with I_N, max. ø for threaded connection, [7] Weight of pressure shroud

Wilo-Sub TWI 4.09..-B

Pump curves Wilo-Sub TWI 4.09..-B

Minimum Efficiency Index (MEI): ≥ 0.4

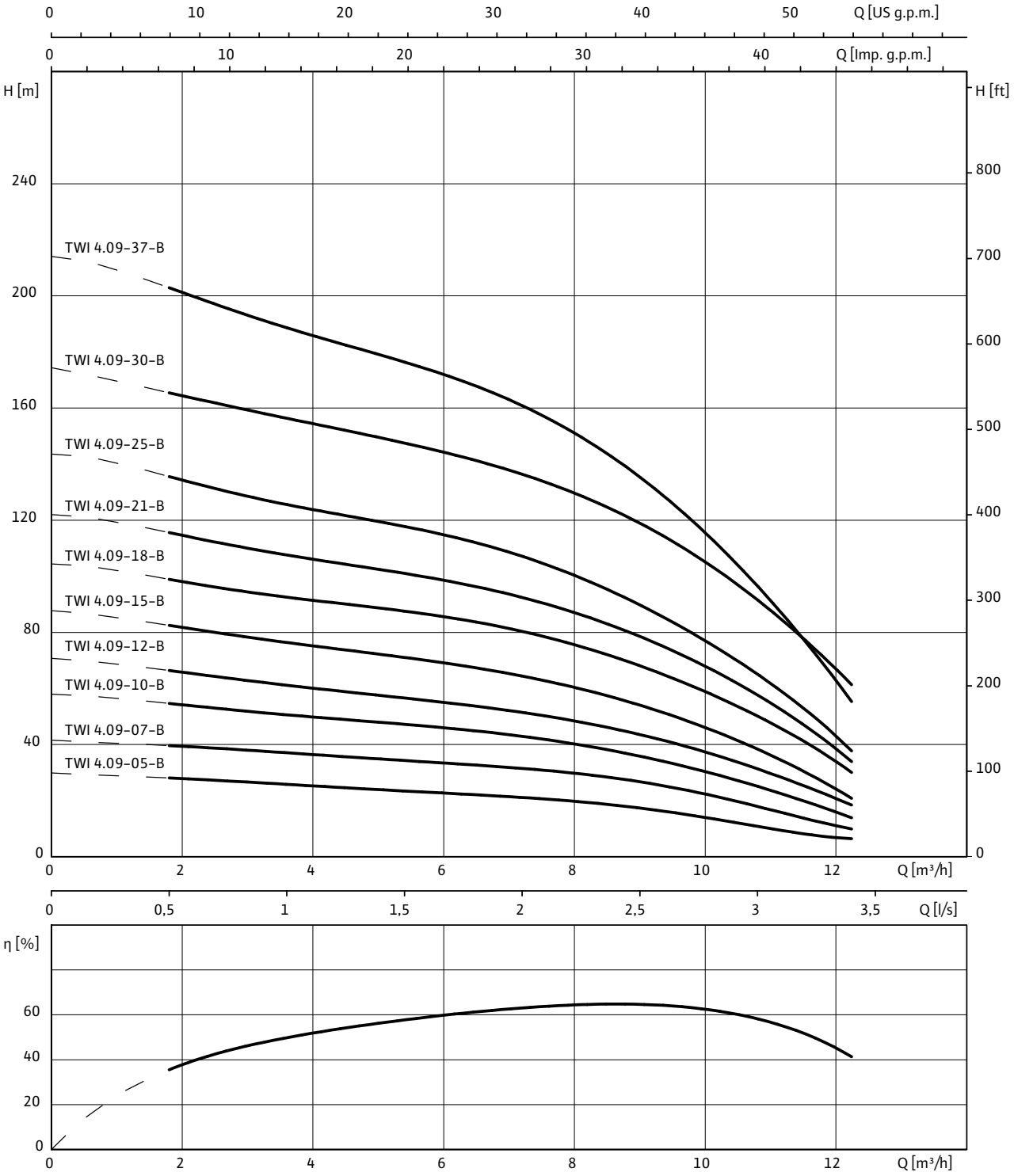

3~400 V, 50 Hz, p = 1 kg/dm^3, ν = 1x10^{-6} m^2/s, ISO 9906 Annex A, η = pump efficiency

Raw water intake

Single pumps

Wilo-Sub TWI 4.09..-B

Motor data

Wilo-Sub...	Mains connection	Motor diameter	Nominal motor power	Nominal current	Length of connecting cable	Cable cross-section
		Ø	P_2	I_N		
		"	kW	A	m	mm^2
TWI 4.09-05-B	3~400 V, 50 Hz	4	1.1	3	2.5	4G1.5
TWI 4.09-07-B	3~400 V, 50 Hz	4	1.1	3	2.5	4G1.5
TWI 4.09-10-B	3~400 V, 50 Hz	4	1.5	4	2.5	4G1.5
TWI 4.09-12-B	3~400 V, 50 Hz	4	2.2	5.9	2.5	4G1.5
TWI 4.09-15-B	3~400 V, 50 Hz	4	2.2	5.9	2.5	4G1.5
TWI 4.09-18-B	3~400 V, 50 Hz	4	3	7.8	2.5	4G1.5
TWI 4.09-21-B	3~400 V, 50 Hz	4	3.7	9.1	2.5	4G1.5
TWI 4.09-25-B	3~400 V, 50 Hz	4	3.7	9.1	2.5	4G1.5
TWI 4.09-30-B	3~400 V, 50 Hz	4	5.5	13.7	2.5	4G1.5
TWI 4.09-37-B	3~400 V, 50 Hz	4	5.5	13.7	2.5	4G1.5

Flange dimensions

Wilo-Sub...	Connection			Pressure class			Dimensions		
	DN1	*DN2*	*DN3*	PN_1	PN_2	PN_3	*D2*	*K*	*D*
	mm			bar			mm		
TWI 4.09...	Rp 2	–	–	10-40	–	–	–	–	–
TWI 4.09...	–	DN 50	DN 50	–	10-40	10	4x18	125	165

Information for order placements

Wilo-Sub...	Mains connection	🚚	Art no.	Art. no. for cooling jacket pipe	
				for vertical installation (B)	*for horizontal installation (D)*
TWI 4.09-05-B	3~400 V, 50 Hz	L	6042972	4064431	6037937
TWI 4.09-07-B	3~400 V, 50 Hz	L	6042973	4064431	6037937
TWI 4.09-10-B	3~400 V, 50 Hz	L	6042974	4064431	6037936
TWI 4.09-12-B	3~400 V, 50 Hz	L	6043555	4064431	6037936
TWI 4.09-15-B	3~400 V, 50 Hz	L	6042975	4064431	6037936
TWI 4.09-18-B	3~400 V, 50 Hz	L	6042976	4064431	6037936
TWI 4.09-21-B	3~400 V, 50 Hz	L	6042977	4064432	6038903
TWI 4.09-25-B	3~400 V, 50 Hz	L	6042978	4064432	6038903
TWI 4.09-30-B	3~400 V, 50 Hz	K	6042979	4064432	6038904
TWI 4.09-37-B	3~400 V, 50 Hz	K	6042980	4064432	6038904

🚚= ready for delivery, L = stock article, C = order-specific production approx. 2 weeks, K = order-specific production approx. 4 weeks, A = delivery time on request

Wilo-Sub TWI 4.09..-B

Dimension drawing Wilo-Sub TWI 4.09

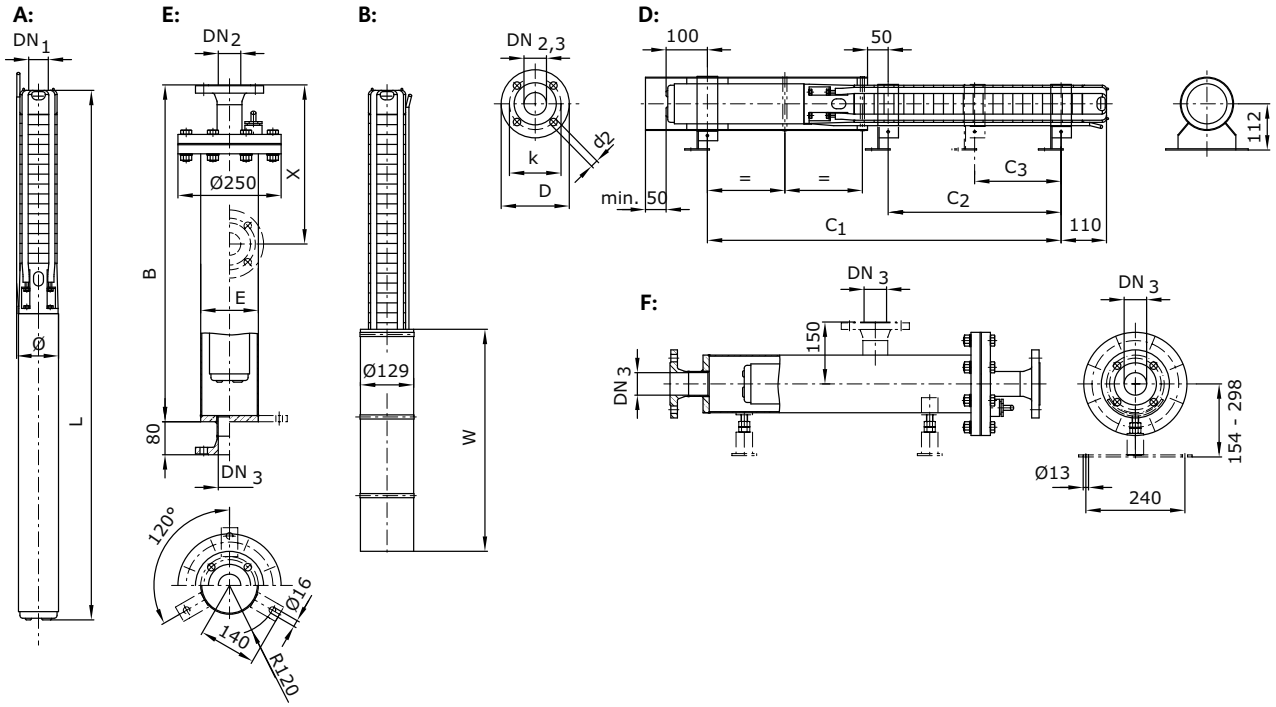

A = vertical, B = vertical with cooling jacket, D = horizontal with cooling jacket, E = vertical with pressure shroud, F = horizontal with pressure shroud

Dimensions, weights

Wilo-Sub...	Dimensions								Weight	Weight of unit	Installation
	B	*C1*	*C2*	*C3*	*E*	*L*	*W*	*ø* [3]	*Jacket* [7]	*m*	
	mm								kg		
TWI 4.09-05-B	1220	502	–	–	139.7	717	750	98	36	15.7	A, B, D, E, F
TWI 4.09-07-B	1220	586	–	–	139.7	801	750	98	36	16.7	A, B, D, E, F
TWI 4.09-10-B	1220	741	292	–	139.7	956	750	98	36	19.4	A, B, D, E, F
TWI 4.09-12-B	1520	853	376	–	139.7	1068	750	98	38	21.8	A, B, D, E, F
TWI 4.09-15-B	1520	979	502	–	139.7	1194	750	98	38	23.3	A, B, D, E, F
TWI 4.09-18-B	1820	1257	628	–	139.7	1472	750	98	41	30.7	A, B, D, E, F
TWI 4.09-21-B	2120	1423	754	–	139.7	1636	1000	98	44	25	A, B, D, E, F
TWI 4.09-25-B	2120	1591	922	–	139.7	1804	1000	98	44	37	A, B, D, E, F
TWI 4.09-30-B	2420	1951	1132	566	139.7	2166	1000	98	46	46.7	A, B, D, E, F
TWI 4.09-37-B	2720	2245	1426	713	139.7	2457	1000	98	49	50.2	A, B, D, E, F

[3] For power cable in accordance with I_N, max. ø for threaded connection, [7] Weight of pressure shroud

Wilo-Sub TWI 4.14..-B

Pump curves Wilo-Sub TWI 4.14..-B

Minimum Efficiency Index (MEI): ≥ 0.1

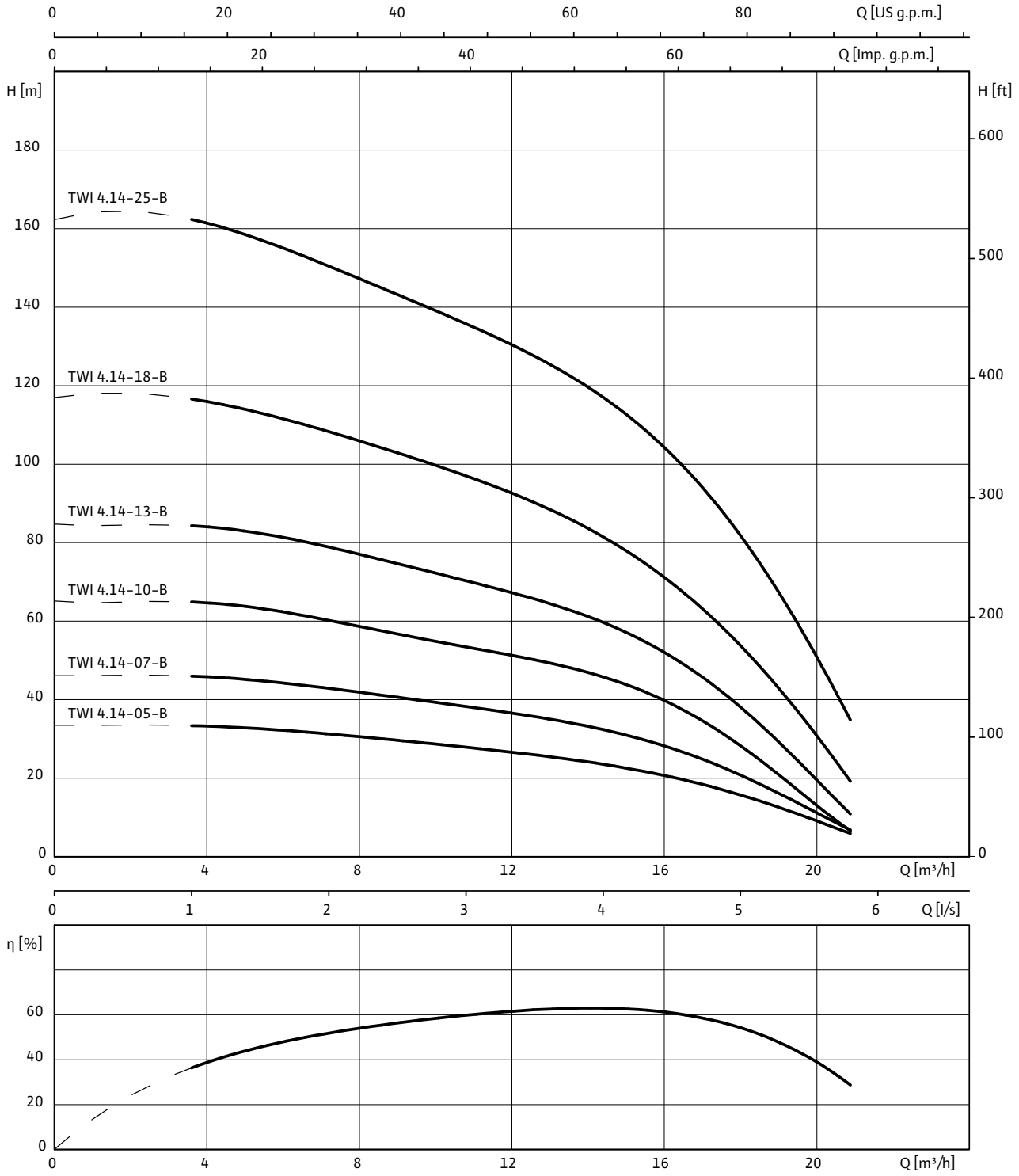

3~400 V, 50 Hz, p = 1 kg/dm^3, v = 1x10^{-6} m^2/s, ISO 9906 Annex A, η = pump efficiency

Wilo-Sub TWI 4.14..-B

Motor data						
Wilo-Sub...	**Mains connection**	**Motor diameter**	**Nominal motor power**	**Nominal current**	**Length of connecting cable**	**Cable cross-section**
		Ø	P_2	I_N		
		"	kW	A	m	mm^2
TWI 4.14-05-B	3~400 V, 50 Hz	4	2.2	5.9	2.5	4G1.5
TWI 4.14-07-B	3~400 V, 50 Hz	4	2.2	5.9	2.5	4G1.5
TWI 4.14-10-B	3~400 V, 50 Hz	4	3	7.8	2.5	4G1.5
TWI 4.14-13-B	3~400 V, 50 Hz	4	4	10	2.5	4G1.5
TWI 4.14-18-B	3~400 V, 50 Hz	4	5.5	13.7	2.5	4G1.5
TWI 4.14-25-B	3~400 V, 50 Hz	4	7.5	18.4	2.5	4G1.5

Flange dimensions									
Wilo-Sub...	**Connection**			**Pressure class**			**Dimensions**		
	DN1	*DN2*	*DN3*	PN_1	PN_2	PN_3	*D2*	*K*	*D*
	mm			bar			mm		
TWI 4.14...	Rp 2	–	–	10-40	–	–	–	–	–
TWI 4.14...	–	DN 50	DN 50	–	10-40	10	4x18	125	165

Information for order placements					
Wilo-Sub...	**Mains connection**	🚚	**Art no.**	**Art. no. for cooling jacket pipe**	
				for vertical installation (B)	*for horizontal installation (D)*
TWI 4.14-05-B	3~400 V, 50 Hz	L	6042981	4064431	6037937
TWI 4.14-07-B	3~400 V, 50 Hz	L	6042982	4064431	6037936
TWI 4.14-10-B	3~400 V, 50 Hz	L	6042983	4064431	6037936
TWI 4.14-13-B	3~400 V, 50 Hz	L	6042984	4064432	6038903
TWI 4.14-18-B	3~400 V, 50 Hz	L	6042985	4064432	6038903
TWI 4.14-25-B	3~400 V, 50 Hz	L	6042986	4064432	6038904

🚚= ready for delivery, L = stock article, C = order-specific production approx. 2 weeks, K = order-specific production approx. 4 weeks, A = delivery time on request

Raw water intake

Single pumps

Wilo-Sub TWI 4.14..-B

Dimension drawing Wilo-Sub TWI 4.14

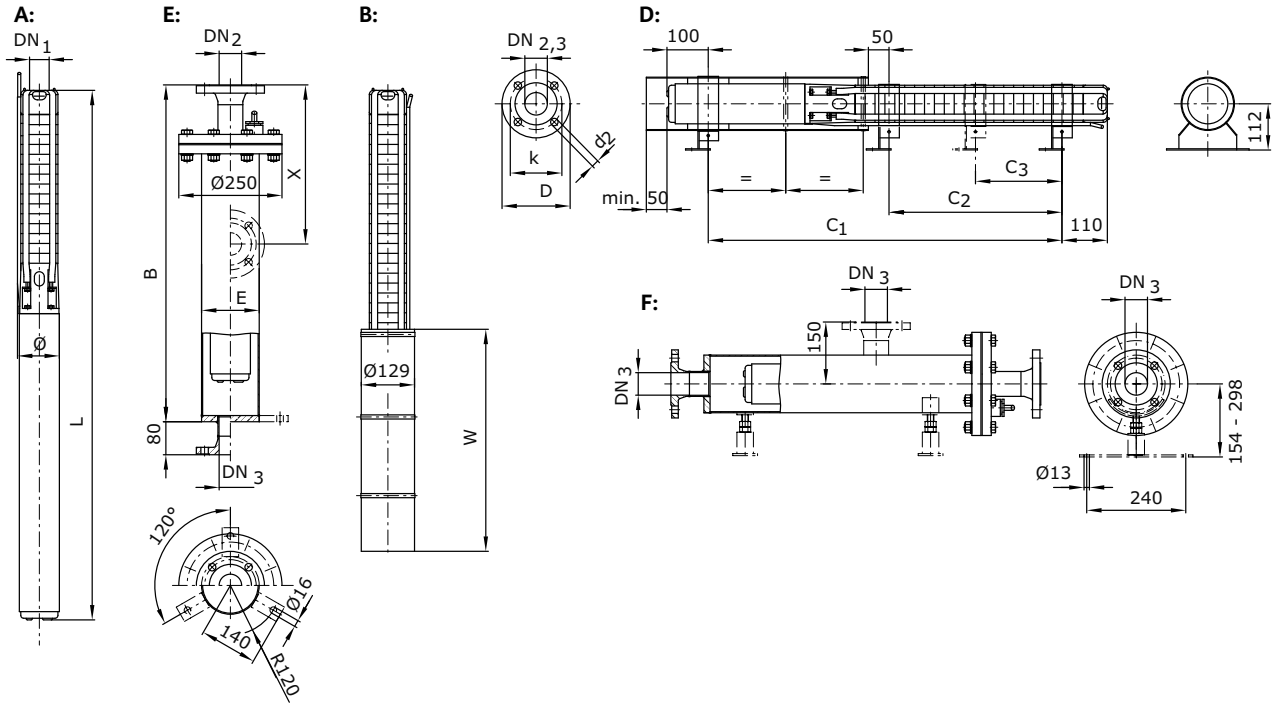

A = vertical, B = vertical with cooling jacket, D = horizontal with cooling jacket, E = vertical with pressure shroud, F = horizontal with pressure shroud

Dimensions, weights

Wilo-Sub...	Dimensions								Weight	Weight of unit	Installation
	B	*C1*	*C2*	*C3*	*E*	*L*	*W*	*ø* [3]	*Jacket*[7]	*m*	
	mm								kg		
TWI 4.14-05-B	1220	658	–	–	139.7	867	750	98	36	19	A, B, D, E, F
TWI 4.14-07-B	1520	788	291	–	139.7	997	750	98	38	20.3	A, B, D, E, F
TWI 4.14-10-B	1820	1135	486	–	139.7	1344	750	98	41	28.1	A, B, D, E, F
TWI 4.14-13-B	2120	1406	681	–	139.7	1615	1000	98	44	34.7	A, B, D, E, F
TWI 4.14-18-B	2420	1845	1006	–	139.7	2054	1000	98	46	43.3	A, B, D, E, F
TWI 4.14-25-B	2920	2376	1461	731	139.7	2585	1000	98	51	51.4	A, B, D, E, F

[3] For power cable in accordance with I_N, max. ø for threaded connection, [7] Weight of pressure shroud

Series description Wilo-Sub TWI 6-..-B

ErP READY — APPLIES TO EUROPEAN DIRECTIVE FOR ENERGY RELATED PRODUCTS

Design
Submersible pump, multistage

Type key

Type key, standard version

Example:	**Wilo-Sub TWI 6.18-04-B-SD-R**
TWI	Submersible pump
6	Diameter of the hydraulic unit in inches ["]
18	Rated volume flow [m^3/h]
04	Number of hydraulic stages
B	Series generation
SD	Starting mode Without = direct starting SD = star-delta starting
R	Motor rewindable, without = motor hermetically cast

Type key, configurable version

Example:	**Wilo-Sub TWI 06.30-29-NB + NU 611-2/15**
Hydraulics:	**TWI 06.30-29-NB**
TWI	Hydraulics
0	Configurable series
6	Diameter of the hydraulic unit in inches ["]
30	Rated volume flow [m^3/h]
29	Number of hydraulic stages
N	Standard impeller diameter
B	Series generation
Motor:	**NU 611-2/15**
NU	Submersible motor
611	Size
2	Number of poles
15	nominal power

Application
- For water and potable water supply from boreholes and rainwater storage tanks
- Process water supply
- For municipal water supply, sprinkling and irrigation
- Pressure boosting
- Lowering the water level
- For pumping water in industrial applications
- For pumping water without long-fibre and abrasive constituents

Special features/product advantages
- Easy maintenance due to rapid installation and dismantling
- Integrated non-return valve
- Vertical and horizontal installation possible
- Standard and configurable versions available
- Star/delta starting
- Cast and rewindable motors

Technical data
- Mains connection: 3~400 V, 50 Hz
- Immersed operating mode: S1
- Fluid temperature: 3-30 °C
- Minimum flow rate at motor:
  - Hermetically cast motors: 0.08 - 0.16 m/s
  - Rewindable motors (SD-R): 0.1 - 0.5 m/s (depending on type)
- Max. sand content: 50 g/m^3
- Max. number of starts: 20/h
- Max. immersion depth:
  - Hermetically cast motors: 350 m
  - Rewindable motors: 100 m
- Protection class: IP 68
- Pressure connection: Rp 2½ - Rp 3

Equipment/function
- Multistage submersible-motor pump with radial or semi-axial impellers
- Integrated non-return valve
- NEMA coupling
- Three-phase motor
- Hermetically cast motors
- Rewindable motors

Series description Wilo-Sub TWI 6-..-B

Materials

Standard version:
- Hydraulic housing: Stainless steel 1.4301
- Impellers: Stainless steel 1.4301
- Hydraulics shaft: Stainless steel 1.4057
- Motor housing: EN-GJL or stainless steel 1.4301
- Motor shaft: Stainless steel 1.4305 or 1.4301

Special version:
- Hydraulic housing: Stainless steel 1.4401
- Impellers: Stainless steel 1.5471
- Hydraulics shaft: Stainless steel 1.4401
- Motor housing: Stainless steel 1.4401, 1.4408, 1.4571 (depending on type)
- Motor shaft: Stainless steel 1.4542. 1.4460, 1.4462 (depending on type)

Description/design

Submersible-motor pump for vertical or horizontal installation.

Hydraulics

Multistage submersible-motor pump with 4" or 6" NEMA connection and radial or semi-axial impellers with sectional construction. Integrated non-return valve. All parts in contact with the fluid are made of corrosion-free materials.

Motor

Three-phase motor for direct and star-delta starting Sealed, hermetically cast motor with enamel-insulated winding, resin-impregnated, or rewindable motor with PVC-insulated winding, self-lubricating bearing, with water-glycol filling.

Cooling

The motor is cooled by the fluid. The motor must always be operated in submerged state. The limit values for the max. fluid temperature and the minimum flow rate must not be exceeded. Vertical installation is possible optionally with or without cooling jacket. Cooling jacket is required for horizontal installation.

Pressure shroud

The pressure shroud is used for direct installation of the unit in the pipe system. Standard models are without mounted non-return valves. The maximum inlet pressure is 10 bar.

Options

- Hydraulics in stainless steel 1.4401
- Stainless steel motor in 1.4401, 1.4408 or 1.4571
- 60 Hz version
- Star-delta starting
- Rewindable motor
- Rewindable motor with potable water filling
- Configured units for special versions

Scope of delivery

- Hydraulics + motor fully assembled
- 4/5/10 m connecting cable approved for potable water with standard version models (cross-section: 4x2.5 mm^2 or 4x4 mm^2)
- Cable cross-section and length per customer request for configured material
- Installation and operating instructions

Accessories

- Cooling jacket pipes
- Pressure shroud (for configured units)
- Cable kits for potable water and process water
- Switchgears

Note

The units shown here are standard versions that are available directly from stock or deliverable within 2-4 weeks. For more details about delivery times, please see the LB column:
- L = in-stock items; available from stock in specified standard configuration
- K = component production from stock; job-specific production, delivery within approx. 4 weeks in specified standard configuration
- A = delivery time on request; configured product per customer request

Configuration

- No suction mode is possible with these units!
- The unit must be fully immersed in water during operation.

General notes - ErP (ecological design-) directive

Minimum Efficiency Index (MEI) ≥ 0.1
- The benchmark for most efficient water pumps is MEI ≥ 0.70
- The efficiency of a pump with a trimmed impeller is usually lower than that of a pump with the full impeller diameter. The trimming of the impeller will adapt the pump to a fixed duty point, leading to reduced energy consumption. The minimum efficiency index (MEI) is based on the full impeller diameter.
- The operation of this water pump with variable duty points may be more efficient and economic when controlled, for example, by the use of a variable speed drive that matches the pump duty to the system.
- Information on benchmark efficiency is available at **www.europump.org/efficiencycharts**

Series description Wilo-Sub TWI 6-..-B

Pump curves

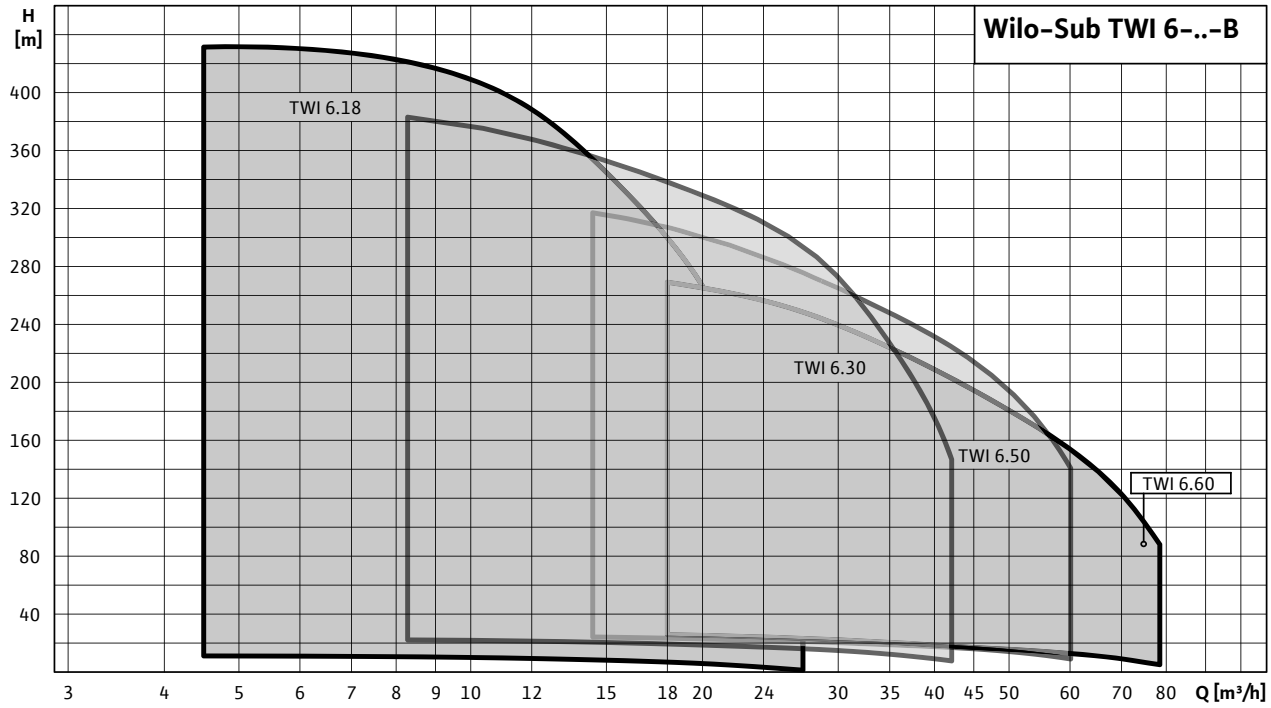

Raw water intake

Single pumps

Technical data Wilo-Sub TWI 6-..-B

Wilo-Sub...	Type of motor	Max. volume flow	Max. delivery head	Min. flow rate at the motor	Insulation class	Max. immersion depth
		Q_{max}	H_{max}	v		
		m^3/h	m	m/s		m
TWI 6.18-01-B	DM	27	11	0.1	B	350
TWI 6.18-02-B	DM	27	22	0.1	B	350
TWI 6.18-04-B	DM	27	42	0.1	B	350
TWI 6.18-05-B	DM	27	53	0.1	B	350
TWI 6.18-06-B	DM	27	62	0.1	B	350
TWI 6.18-07-B	DM	27	75	0.1	B	350
TWI 6.18-10-B	DM	27	108	0.1	B	350
TWI 6.18-13-B	DM	27	140	0.16	F	350
TWI 6.18-17-B	DM	27	183	0.16	F	350
TWI 6.18-20-B	DM	27	212	0.16	F	350
TWI 6.18-20-B-SD	SD	27	212	0.16	F	350
TWI 6.18-20-B-SD-R	SD-R	27	212	0.1	80°C	100
TWI 6.18-22-B	DM	27	238	0.16	F	350
TWI 6.18-22-B-SD	SD	27	238	0.16	F	350
TWI 6.18-22-B-SD-R	SD-R	27	238	0.2	80°C	100
TWI 6.18-24-B	DM	27	258	0.16	F	350
TWI 6.18-24-B-SD	SD	27	258	0.16	F	350
TWI 6.18-24-B-SD-R	SD-R	27	258	0.2	80°C	100
TWI 6.18-27-B	DM	27	290	0.16	F	350
TWI 6.18-27-B-SD	SD	27	290	0.16	F	350
TWI 6.18-27-B-SD-R	SD-R	27	290	0.2	80°C	100
TWI 6.18-29-B	DM	27	317	0.16	F	350
TWI 6.18-29-B-SD	SD	27	317	0.16	F	350
TWI 6.18-29-B-SD-R	SD-R	27	317	0.5	80°C	100
TWI 6.18-31-B	DM	27	333	0.16	F	350
TWI 6.18-31-B-SD	SD	27	333	0.16	F	350
TWI 6.18-31-B-SD-R	SD-R	27	333	0.5	80°C	100
TWI 6.18-33-B	DM	27	351	0.16	F	350
TWI 6.18-33-B-SD	SD	27	351	0.16	F	350
TWI 6.18-33-B-SD-R	SD-R	27	351	0.5	80°C	100
TWI 6.18-36-B	DM	27	387	0.16	F	350
TWI 6.18-36-B-SD	SD	27	387	0.16	F	350
TWI 6.18-36-B-SD-R	SD-R	27	387	0.5	80°C	100
TWI 6.18-38-B	DM	27	407	0.16	F	350
TWI 6.18-38-B-SD	SD	27	407	0.16	F	350

Voltage tolerance +/- 10 % (specifications according to DIN EN 60034)

Technical data Wilo-Sub TWI 6-..-B

Wilo-Sub...	Type of motor	Max. volume flow	Max. delivery head	Min. flow rate at the motor	Insulation class	Max. immersion depth
		Q_{max}	H_{max}	v		
		m^3/h	m	m/s		m
TWI 6.18-38-B-SD-R	SD-R	27	407	0.5	80°C	100
TWI 6.18-40-B	DM	27	427	0.16	F	350
TWI 6.18-40-B-SD	SD	27	427	0.16	F	350
TWI 6.18-40-B-SD-R	SD-R	27	427	0.5	80°C	100
TWI 6.30-02-B	DM	42	22	0.1	B	350
TWI 6.30-03-B	DM	42	32	0.1	B	350
TWI 6.30-04-B	DM	42	43	0.1	B	350
TWI 6.30-06-B	DM	42	67	0.16	B	350
TWI 6.30-08-B	DM	42	88	0.16	F	350
TWI 6.30-11-B	DM	42	122	0.16	F	350
TWI 6.30-11-B-SD	SD	42	122	0.16	F	350
TWI 6.30-13-B	DM	42	142	0.16	F	350
TWI 6.30-13-B-SD	SD	42	142	0.16	F	350
TWI 6.30-15-B	DM	42	168	0.16	F	350
TWI 6.30-15-B-SD	SD	42	168	0.16	F	350
TWI 6.30-17-B	DM	42	187	0.16	F	350
TWI 6.30-17-B-SD	SD	42	187	0.16	F	350
TWI 6.30-17-B-SD-R	SD-R	42	187	0.5	80°C	100
TWI 6.30-19-B	DM	42	207	0.16	F	350
TWI 6.30-19-B-SD	SD	42	207	0.16	F	350
TWI 6.30-19-B-SD-R	SD-R	42	207	0.5	80°C	100
TWI 6.30-21-B	DM	42	225	0.16	F	350
TWI 6.30-21-B-SD	SD	42	225	0.16	F	350
TWI 6.30-21-B-SD-R	SD-R	42	225	0.5	80°C	100
TWI 6.30-24-B	DM	42	258	0.16	F	350
TWI 6.30-24-B-SD	SD	42	258	0.16	F	350
TWI 6.30-24-B-SD-R	SD-R	42	258	0.5	80°C	100
TWI 6.30-26-B	DM	42	283	0.16	F	350
TWI 6.30-26-B-SD	SD	42	283	0.16	F	350
TWI 6.30-26-B-SD-R	SD-R	42	283	0.5	80°C	100
TWI 6.30-29-B	DM	42	322	0.16	F	350
TWI 6.30-29-B-SD	SD	42	322	0.16	F	350

Voltage tolerance +/- 10 % (specifications according to DIN EN 60034)

Raw water intake

Single pumps

Technical data Wilo-Sub TWI 6-..-B

Wilo-Sub...	Type of motor	Max. volume flow	Max. delivery head	Min. flow rate at the motor	Insulation class	Max. immersion depth
		Q_{max}	H_{max}	v		
		m^3/h	m	m/s		m
TWI 6.30-29-B-SD-R	SD-R	42	322	0.5	80°C	100
TWI 6.30-32-B	DM	42	350	0.16	F	350
TWI 6.30-32-B-SD	SD	42	350	0.16	F	350
TWI 6.30-32-B-SD-R	SD-R	42	350	0.5	80°C	100
TWI 6.30-35-B	DM	42	380	0.16	F	350
TWI 6.30-35-B-SD	SD	42	380	0.16	F	350
TWI 6.30-35-B-SD-R	SD-R	42	380	0.5	80°C	100
TWI 6.50-02-B	DM	60	21	0.1	B	350
TWI 6.50-03-B	DM	60	40	0.1	B	350
TWI 6.50-05-B	DM	60	61	0.16	F	350
TWI 6.50-07-B	DM	60	91	0.16	F	350
TWI 6.50-07-B-SD	SD	60	91	0.16	F	350
TWI 6.50-10-B	DM	60	130	0.16	F	350
TWI 6.50-10-B-SD	SD	60	130	0.16	F	350
TWI 6.50-12-B	DM	60	158	0.16	F	350
TWI 6.50-12-B-SD	SD	60	158	0.16	F	350
TWI 6.50-15-B	DM	60	198	0.16	F	350
TWI 6.50-15-B-SD	SD	60	198	0.16	F	350
TWI 6.50-15-B-SD-R	SD-R	60	198	0.5	80°C	100
TWI 6.50-17-B	DM	60	225	0.16	F	350
TWI 6.50-17-B-SD	SD	60	225	0.16	F	350
TWI 6.50-17-B-SD-R	SD-R	60	225	0.5	80°C	100
TWI 6.50-19-B	DM	60	252	0.16	F	350
TWI 6.50-19-B-SD	SD	60	252	0.16	F	350
TWI 6.50-19-B-SD-R	SD-R	60	252	0.5	80°C	100
TWI 6.50-22-B	DM	60	290	0.16	F	350
TWI 6.50-22-B-SD	SD	60	290	0.16	F	350
TWI 6.50-22-B-SD-R	SD-R	60	290	0.5	80°C	100
TWI 6.50-24-B	DM	60	320	0.16	F	350
TWI 6.50-24-B-SD	SD	60	320	0.16	F	350
TWI 6.50-24-B-SD-R	SD-R	60	320	0.5	80°C	100
TWI 6.60-02-B	DM	78	29	0.16	B	350
TWI 6.60-03-B	DM	78	41	0.16	B	350
TWI 6.60-04-B	DM	78	53	0.16	F	350

Voltage tolerance +/- 10 % (specifications according to DIN EN 60034)

Technical data Wilo-Sub TWI 6-..-B

Wilo-Sub...	Type of motor	Max. volume flow	Max. delivery head	Min. flow rate at the motor	Insulation class	Max. immersion depth
		Q_{max}	H_{max}	v		
		m^3/h	m	m/s		m
TWI 6.60-06-B	DM	78	80	0.16	F	350
TWI 6.60-06-B-SD	SD	78	80	0.16	F	350
TWI 6.60-08-B	DM	78	108	0.16	F	350
TWI 6.60-08-B-SD	SD	78	108	0.16	F	350
TWI 6.60-10-B	DM	78	131	0.16	F	350
TWI 6.60-10-B-SD	SD	78	131	0.16	F	350
TWI 6.60-12-B	DM	78	161	0.16	F	350
TWI 6.60-12-B-SD	SD	78	161	0.16	F	350
TWI 6.60-14-B	DM	78	190	0.16	F	350
TWI 6.60-14-B-SD	SD	78	190	0.16	F	350
TWI 6.60-14-B-SD-R	SD-R	78	190	0.5	80°C	100
TWI 6.60-16-B	DM	78	215	0.16	F	350
TWI 6.60-16-B-SD	SD	78	215	0.16	F	350
TWI 6.60-16-B-SD-R	SD-R	78	215	0.5	80°C	100
TWI 6.60-18-B	DM	78	245	0.16	F	350
TWI 6.60-18-B-SD	SD	78	245	0.16	F	350
TWI 6.60-18-B-SD-R	SD-R	78	245	0.5	80°C	100
TWI 6.60-20-B	DM	78	270	0.16	F	350
TWI 6.60-20-B-SD	SD	78	270	0.16	F	350
TWI 6.60-20-B-SD-R	SD-R	78	270	0.5	80°C	100

Voltage tolerance +/- 10 % (specifications according to DIN EN 60034)

Raw water intake

Single pumps

Materials

Wilo-Sub...	Impeller	Pump housing	Pump shaft	Motor housing	Motor shaft
TWI 6.18-01-B	1.4301	1.4301	1.4057	1.4301	1.4305
TWI 6.18-02-B	1.4301	1.4301	1.4057	1.4301	1.4305
TWI 6.18-04-B	1.4301	1.4301	1.4057	1.4301	1.4305
TWI 6.18-05-B	1.4301	1.4301	1.4057	1.4301	1.4305
TWI 6.18-06-B	1.4301	1.4301	1.4057	1.4301	1.4305
TWI 6.18-07-B	1.4301	1.4301	1.4057	1.4301	1.4305
TWI 6.18-10-B	1.4301	1.4301	1.4057	1.4301	1.4305
TWI 6.18-13-B	1.4301	1.4301	1.4057	EN-GJL	1.4305
TWI 6.18-17-B	1.4301	1.4301	1.4057	EN-GJL	1.4305
TWI 6.18-20-B	1.4301	1.4301	1.4057	EN-GJL	1.4305
TWI 6.18-20-B-SD	1.4301	1.4301	1.4057	EN-GJL	1.4305
TWI 6.18-20-B-SD-R	1.4301	1.4301	1.4057	1.4301	1.4301
TWI 6.18-22-B	1.4301	1.4301	1.4057	EN-GJL	1.4305
TWI 6.18-22-B-SD	1.4301	1.4301	1.4057	EN-GJL	1.4305
TWI 6.18-22-B-SD-R	1.4301	1.4301	1.4057	1.4301	1.4301
TWI 6.18-24-B	1.4301	1.4301	1.4057	EN-GJL	1.4305
TWI 6.18-24-B-SD	1.4301	1.4301	1.4057	EN-GJL	1.4305
TWI 6.18-24-B-SD-R	1.4301	1.4301	1.4057	1.4301	1.4301
TWI 6.18-27-B	1.4301	1.4301	1.4057	EN-GJL	1.4305
TWI 6.18-27-B-SD	1.4301	1.4301	1.4057	EN-GJL	1.4305
TWI 6.18-27-B-SD-R	1.4301	1.4301	1.4057	1.4301	1.4301
TWI 6.18-29-B	1.4301	1.4301	1.4057	EN-GJL	1.4305
TWI 6.18-29-B-SD	1.4301	1.4301	1.4057	EN-GJL	1.4305
TWI 6.18-29-B-SD-R	1.4301	1.4301	1.4057	1.4301	1.4301
TWI 6.18-31-B	1.4301	1.4301	1.4057	EN-GJL	1.4305
TWI 6.18-31-B-SD	1.4301	1.4301	1.4057	EN-GJL	1.4305
TWI 6.18-31-B-SD-R	1.4301	1.4301	1.4057	1.4301	1.4301
TWI 6.18-33-B	1.4301	1.4301	1.4057	EN-GJL	1.4305
TWI 6.18-33-B-SD	1.4301	1.4301	1.4057	EN-GJL	1.4305
TWI 6.18-33-B-SD-R	1.4301	1.4301	1.4057	1.4301	1.4301
TWI 6.18-36-B	1.4301	1.4301	1.4057	EN-GJL	1.4305
TWI 6.18-36-B-SD	1.4301	1.4301	1.4057	EN-GJL	1.4305
TWI 6.18-36-B-SD-R	1.4301	1.4301	1.4057	1.4301	1.4301
TWI 6.18-38-B	1.4301	1.4301	1.4057	EN-GJL	1.4305
TWI 6.18-38-B-SD	1.4301	1.4301	1.4057	EN-GJL	1.4305

Materials

Wilo-Sub...	Impeller	Pump housing	Pump shaft	Motor housing	Motor shaft
TWI 6.18-38-B-SD-R	1.4301	1.4301	1.4057	1.4301	1.4301
TWI 6.18-40-B	1.4301	1.4301	1.4057	EN-GJL	1.4305
TWI 6.18-40-B-SD	1.4301	1.4301	1.4057	EN-GJL	1.4305
TWI 6.18-40-B-SD-R	1.4301	1.4301	1.4057	1.4301	1.4301
TWI 6.30-02-B	1.4301	1.4301	1.4057	1.4301	1.4305
TWI 6.30-03-B	1.4301	1.4301	1.4057	1.4301	1.4305
TWI 6.30-04-B	1.4301	1.4301	1.4057	1.4301	1.4305
TWI 6.30-06-B	1.4301	1.4301	1.4057	1.4301	1.4305
TWI 6.30-08-B	1.4301	1.4301	1.4057	EN-GJL	1.4305
TWI 6.30-11-B	1.4301	1.4301	1.4057	EN-GJL	1.4305
TWI 6.30-11-B-SD	1.4301	1.4301	1.4057	EN-GJL	1.4305
TWI 6.30-13-B	1.4301	1.4301	1.4057	EN-GJL	1.4305
TWI 6.30-13-B-SD	1.4301	1.4301	1.4057	EN-GJL	1.4305
TWI 6.30-15-B	1.4301	1.4301	1.4057	EN-GJL	1.4305
TWI 6.30-15-B-SD	1.4301	1.4301	1.4057	EN-GJL	1.4305
TWI 6.30-17-B	1.4301	1.4301	1.4057	EN-GJL	1.4305
TWI 6.30-17-B-SD	1.4301	1.4301	1.4057	EN-GJL	1.4305
TWI 6.30-17-B-SD-R	1.4301	1.4301	1.4057	1.4301	1.4301
TWI 6.30-19-B	1.4301	1.4301	1.4057	EN-GJL	1.4305
TWI 6.30-19-B-SD	1.4301	1.4301	1.4057	EN-GJL	1.4305
TWI 6.30-19-B-SD-R	1.4301	1.4301	1.4057	1.4301	1.4301
TWI 6.30-21-B	1.4301	1.4301	1.4057	EN-GJL	1.4305
TWI 6.30-21-B-SD	1.4301	1.4301	1.4057	EN-GJL	1.4305
TWI 6.30-21-B-SD-R	1.4301	1.4301	1.4057	1.4301	1.4301
TWI 6.30-24-B	1.4301	1.4301	1.4057	EN-GJL	1.4305
TWI 6.30-24-B-SD	1.4301	1.4301	1.4057	EN-GJL	1.4305
TWI 6.30-24-B-SD-R	1.4301	1.4301	1.4057	1.4301	1.4301
TWI 6.30-26-B	1.4301	1.4301	1.4057	EN-GJL	1.4305
TWI 6.30-26-B-SD	1.4301	1.4301	1.4057	EN-GJL	1.4305
TWI 6.30-26-B-SD-R	1.4301	1.4301	1.4057	1.4301	1.4301
TWI 6.30-29-B	1.4301	1.4301	1.4057	EN-GJL	1.4305
TWI 6.30-29-B-SD	1.4301	1.4301	1.4057	EN-GJL	1.4305

Raw water intake

Single pumps

Materials

Wilo-Sub...	Impeller	Pump housing	Pump shaft	Motor housing	Motor housing (special version)	Motor shaft	Motor shaft (special version)
TWI 6.30-29-B-SD-R	1.4301	1.4301	1.4057	1.4301	1.4571	1.4301	1.4462
TWI 6.30-32-B	1.4301	1.4301	1.4057	EN-GJL	1.4408	1.4305	1.4542
TWI 6.30-32-B-SD	1.4301	1.4301	1.4057	EN-GJL	1.4408	1.4305	1.4542
TWI 6.30-32-B-SD-R	1.4301	1.4301	1.4057	1.4301	1.4571	1.4301	1.4462
TWI 6.30-35-B	1.4301	1.4301	1.4057	EN-GJL	1.4408	1.4305	1.4542
TWI 6.30-35-B-SD	1.4301	1.4301	1.4057	EN-GJL	1.4408	1.4305	1.4542
TWI 6.30-35-B-SD-R	1.4301	1.4301	1.4057	1.4301	1.4571	1.4301	1.4462
TWI 6.50-02-B	1.4301	1.4301	1.4057	1.4301	1.4401	1.4305	1.4542
TWI 6.50-03-B	1.4301	1.4301	1.4057	1.4301	1.4401	1.4305	1.4460
TWI 6.50-05-B	1.4301	1.4301	1.4057	EN-GJL	1.4408	1.4305	1.4542
TWI 6.50-07-B	1.4301	1.4301	1.4057	EN-GJL	1.4408	1.4305	1.4542
TWI 6.50-07-B-SD	1.4301	1.4301	1.4057	EN-GJL	1.4408	1.4305	1.4542
TWI 6.50-10-B	1.4301	1.4301	1.4057	EN-GJL	1.4408	1.4305	1.4542
TWI 6.50-10-B-SD	1.4301	1.4301	1.4057	EN-GJL	1.4408	1.4305	1.4542
TWI 6.50-12-B	1.4301	1.4301	1.4057	EN-GJL	1.4408	1.4305	1.4542
TWI 6.50-12-B-SD	1.4301	1.4301	1.4057	EN-GJL	1.4408	1.4305	1.4542
TWI 6.50-15-B	1.4301	1.4301	1.4057	EN-GJL	1.4408	1.4305	1.4542
TWI 6.50-15-B-SD	1.4301	1.4301	1.4057	EN-GJL	1.4408	1.4305	1.4542
TWI 6.50-15-B-SD-R	1.4301	1.4301	1.4057	1.4301	1.4571	1.4301	1.4462
TWI 6.50-17-B	1.4301	1.4301	1.4057	EN-GJL	1.4408	1.4305	1.4542
TWI 6.50-17-B-SD	1.4301	1.4301	1.4057	EN-GJL	1.4408	1.4305	1.4542
TWI 6.50-17-B-SD-R	1.4301	1.4301	1.4057	1.4301	1.4571	1.4301	1.4462
TWI 6.50-19-B	1.4301	1.4301	1.4057	EN-GJL	1.4408	1.4305	1.4542
TWI 6.50-19-B-SD	1.4301	1.4301	1.4057	EN-GJL	1.4408	1.4305	1.4542
TWI 6.50-19-B-SD-R	1.4301	1.4301	1.4057	1.4301	1.4571	1.4301	1.4462
TWI 6.50-22-B	1.4301	1.4301	1.4057	EN-GJL	1.4408	1.4305	1.4542
TWI 6.50-22-B-SD	1.4301	1.4301	1.4057	EN-GJL	1.4408	1.4305	1.4542
TWI 6.50-22-B-SD-R	1.4301	1.4301	1.4057	1.4301	1.4571	1.4301	1.4462
TWI 6.50-24-B	1.4301	1.4301	1.4057	EN-GJL	1.4408	1.4305	1.4542
TWI 6.50-24-B-SD	1.4301	1.4301	1.4057	EN-GJL	1.4408	1.4305	1.4542
TWI 6.50-24-B-SD-R	1.4301	1.4301	1.4057	1.4301	1.4571	1.4301	1.4462
TWI 6.60-02-B	1.4301	1.4301	1.4057	1.4301	1.4401	1.4305	1.4460
TWI 6.60-03-B	1.4301	1.4301	1.4057	1.4301	1.4401	1.4305	1.4460
TWI 6.60-04-B	1.4301	1.4301	1.4057	EN-GJL	1.4408	1.4305	1.4542

Materials

Wilo-Sub...	Impeller	Pump housing	Pump shaft	Motor housing	Motor housing (special version)	Motor shaft	Motor shaft (special version)
TWI 6.60-06-B	1.4301	1.4301	1.4057	EN-GJL	1.4408	1.4305	1.4542
TWI 6.60-06-B-SD	1.4301	1.4301	1.4057	EN-GJL	1.4408	1.4305	1.4542
TWI 6.60-08-B	1.4301	1.4301	1.4057	EN-GJL	1.4408	1.4305	1.4542
TWI 6.60-08-B-SD	1.4301	1.4301	1.4057	EN-GJL	1.4408	1.4305	1.4542
TWI 6.60-10-B	1.4301	1.4301	1.4057	EN-GJL	1.4408	1.4305	1.4542
TWI 6.60-10-B-SD	1.4301	1.4301	1.4057	EN-GJL	1.4408	1.4305	1.4542
TWI 6.60-12-B	1.4301	1.4301	1.4057	EN-GJL	1.4408	1.4305	1.4542
TWI 6.60-12-B-SD	1.4301	1.4301	1.4057	EN-GJL	1.4408	1.4305	1.4542
TWI 6.60-14-B	1.4301	1.4301	1.4057	EN-GJL	1.4408	1.4305	1.4542
TWI 6.60-14-B-SD	1.4301	1.4301	1.4057	EN-GJL	1.4408	1.4305	1.4542
TWI 6.60-14-B-SD-R	1.4301	1.4301	1.4057	1.4301	1.4571	1.4301	1.4462
TWI 6.60-16-B	1.4301	1.4301	1.4057	EN-GJL	1.4408	1.4305	1.4542
TWI 6.60-16-B-SD	1.4301	1.4301	1.4057	EN-GJL	1.4408	1.4305	1.4542
TWI 6.60-16-B-SD-R	1.4301	1.4301	1.4057	1.4301	1.4571	1.4301	1.4462
TWI 6.60-18-B	1.4301	1.4301	1.4057	EN-GJL	1.4408	1.4305	1.4542
TWI 6.60-18-B-SD	1.4301	1.4301	1.4057	EN-GJL	1.4408	1.4305	1.4542
TWI 6.60-18-B-SD-R	1.4301	1.4301	1.4057	1.4301	1.4571	1.4301	1.4462
TWI 6.60-20-B	1.4301	1.4301	1.4057	EN-GJL	1.4408	1.4305	1.4542
TWI 6.60-20-B-SD	1.4301	1.4301	1.4057	EN-GJL	1.4408	1.4305	1.4542
TWI 6.60-20-B-SD-R	1.4301	1.4301	1.4057	1.4301	1.4571	1.4301	1.4462

Wilo-Sub TWI 6.18..-B

Pump curves Wilo-Sub TWI 6.18..-B

Minimum Efficiency Index (MEI): ≥ 0.4

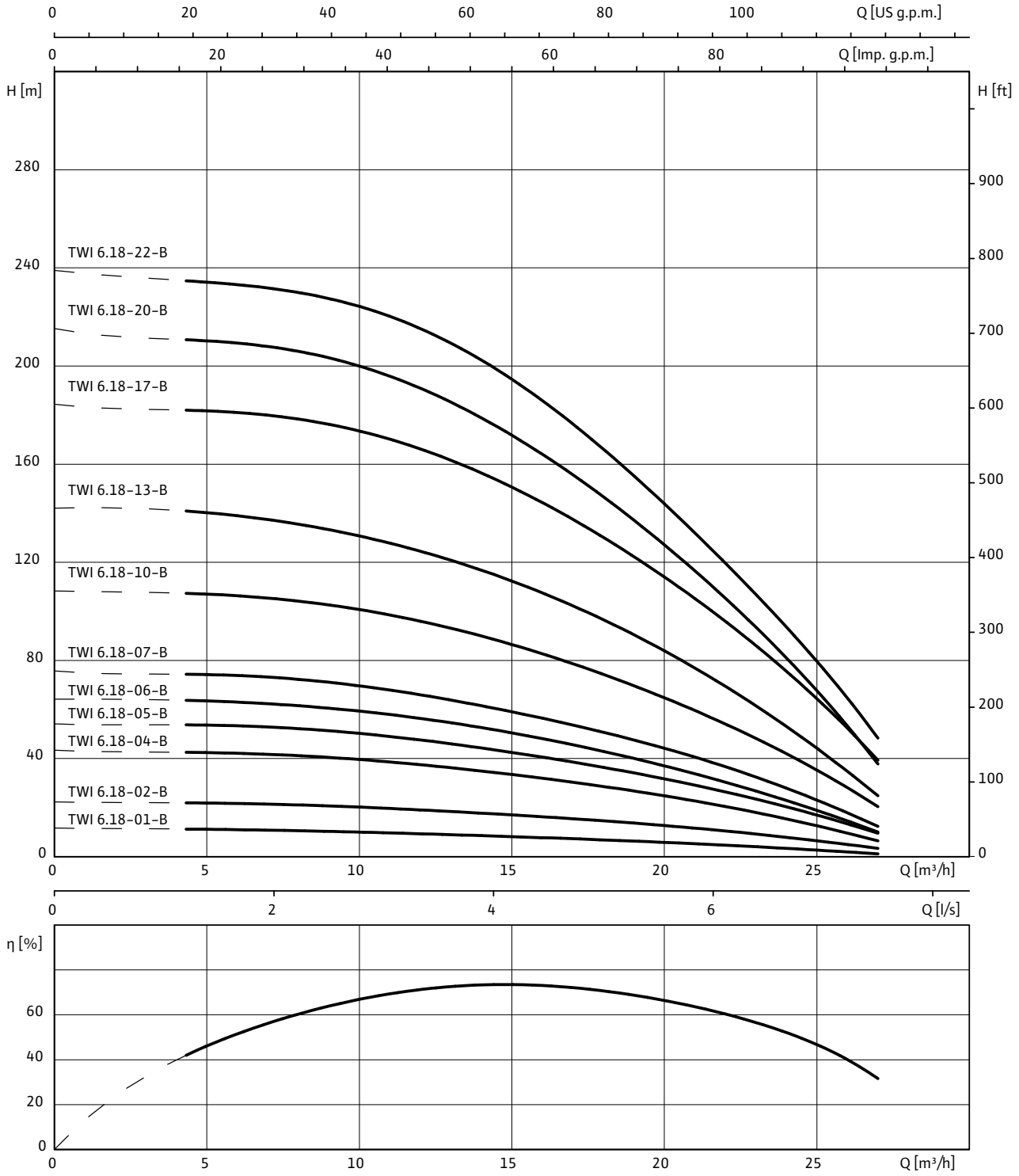

3~400 V, 50 Hz, p = 1 kg/dm^3, v = 1x10^{-6} m^2/s, ISO 9906 Annex A, η = pump efficiency

Wilo-Sub TWI 6.18..-B

Motor data

Wilo-Sub...	Type of motor	Motor diameter	Mains connection	Nominal motor power	Nominal current	Length of connecting cable	Cable cross-section
		Ø		P_2	I_N		
		"		kW	A	m	mm^2
TWI 6.18-01-B	DM	4	3~400 V, 50 Hz	0.55	1.6	5	4G1.5
TWI 6.18-02-B	DM	4	3~400 V, 50 Hz	1.5	4	5	4G1.5
TWI 6.18-04-B	DM	4	3~400 V, 50 Hz	2.2	5.9	5	4G1.5
TWI 6.18-05-B	DM	4	3~400 V, 50 Hz	3	7.8	5	4G1.5
TWI 6.18-06-B	DM	4	3~400 V, 50 Hz	3	7.8	5	4G1.5
TWI 6.18-07-B	DM	4	3~400 V, 50 Hz	3.7	9.1	5	4G1.5
TWI 6.18-10-B	DM	4	3~400 V, 50 Hz	5.5	13.7	5	4G1.5
TWI 6.18-13-B	DM	6	3~400 V, 50 Hz	7.5	16	4	4G4
TWI 6.18-17-B	DM	6	3~400 V, 50 Hz	9.3	20.7	4	4G4
TWI 6.18-20-B	DM	6	3~400 V, 50 Hz	11	23.3	4	4G4
TWI 6.18-20-B-SD	SD	6	3~400 V, 50 Hz	11	23.3	4	2x 4G4
TWI 6.18-20-B-SD-R	SD-R	6	3~400 V, 50 Hz	11	23.5	10	2x 4G2.5
TWI 6.18-22-B	DM	6	3~400 V, 50 Hz	15	31.3	4	4G4
TWI 6.18-22-B-SD	SD	6	3~400 V, 50 Hz	15	31.3	4	2x 4G4
TWI 6.18-22-B-SD-R	SD-R	6	3~400 V, 50 Hz	13	28.5	10	2x 4G2.5

Flange dimensions

Wilo-Sub...	Connection			Pressure class			Dimensions		
	DN1	*DN2*	*DN3*	PN_1	PN_2	PN_3	*D2*	*K*	*D*
	mm			bar			mm		
TWI 6.18...	Rp 2½	–	–	10-40	–	–	–	–	–
TWI 6.18...	–	DN 50	–	–	10-40	–	4x18	125	165
TWI 6.18...	–	–	DN 80	–	–	10	8x18	160	200
TWI 6.18...	–	–	DN 100	–	–	10	8x18	180	220

[1] On request, [3] For power cable in accordance with I_N, max. ø for threaded connection, [7] Weight of pressure shroud

Raw water intake

Single pumps

Wilo-Sub TWI 6.18..-B

Dimension drawing Wilo-Sub TWI 6.18

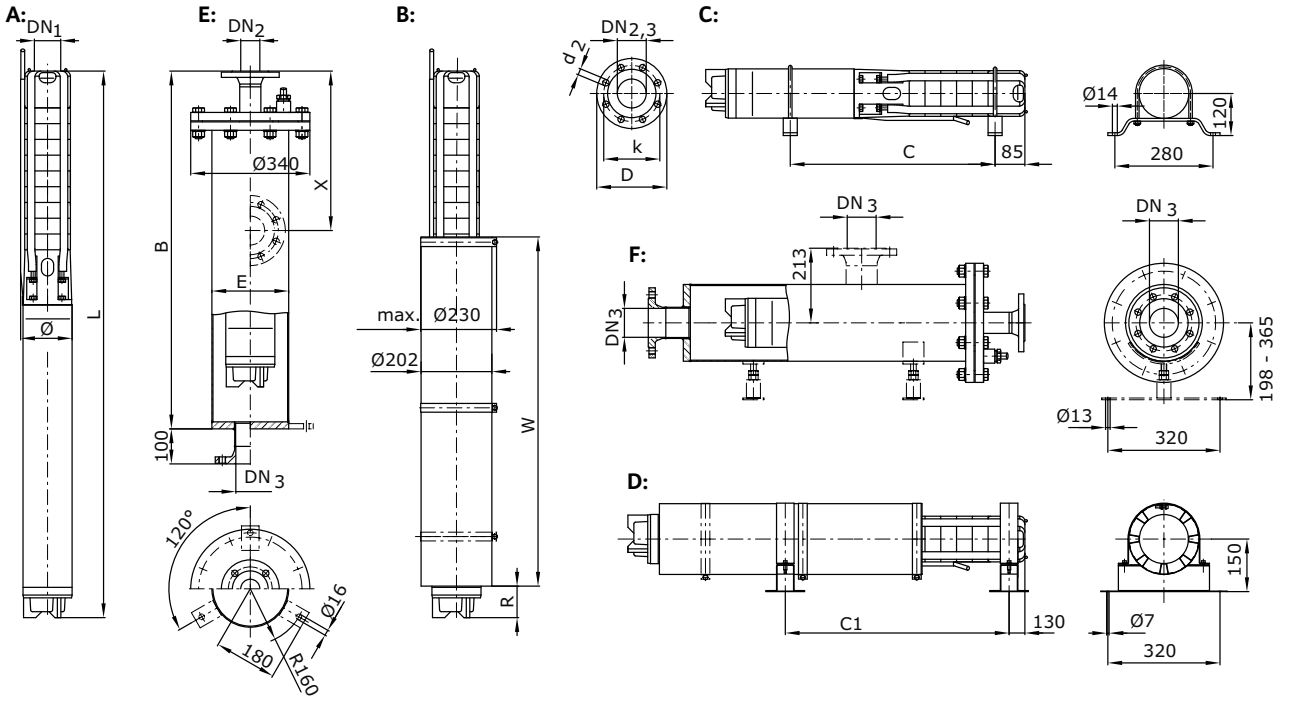

A = vertical, B = vertical with cooling jacket, C = horizontal, D = horizontal with cooling jacket, E = vertical with pressure shroud, F = horizontal with pressure shroud

Dimensions, weights

Wilo-Sub...	Type of motor	Dimensions								Weight	Weight of unit	Installation
		B	*C*	*C1*	*E*	*L*	*R*	*W*	*ø* [3]	*Jacket* [7]	*m*	
		mm								kg		
TWI 6.18-01-B	DM	1050	390	363	219.1	575	69	350	131	57	13.8	A, B, C, D, E, F
TWI 6.18-02-B	DM	1050	490	465	219.1	720	79	425	131	57	19	A, B, C, D, E, F
TWI 6.18-04-B	DM	1350	620	600	219.1	869	107	425	131	62	23.3	A, B, C, D, E, F
TWI 6.18-05-B	DM	1350	760	737	219.1	1082	34	650	131	62	30.7	A, B, C, D, E, F
TWI 6.18-06-B	DM	1650	820	797	219.1	1142	34	650	131	67	32.1	A, B, C, D, E, F
TWI 6.18-07-B	DM	1650	900	878	219.1	1241	74	650	131	67	36.4	A, B, C, D, E, F
TWI 6.18-10-B	DM	1950	1150	1134	219.1	1574	59	815	131	72	47.9	A, B, C, D, E, F
TWI 6.18-13-B	DM	2250	1300	1287	219.1	1715	64	815	142	77	68	A, B, C, D, E, F
TWI 6.18-17-B	DM	2250	1560	1546	219.1	1990	52	815	142	77	76	A, B, C, D, E, F
TWI 6.18-20-B	DM	2550	1770	1743	219.1	2203	84	815	142	81	83	A, B, C, D, E, F
TWI 6.18-20-B-SD	SD	2550	1770	1743	219.1	2203	84	815	142	81	83	A, B, C, D, E, F
TWI 6.18-20-B-SD-R	SD-R	2850	1840	1810	219.1	2346	109	925	142	86	93	A, B, C, D, E, F
TWI 6.18-22-B	DM	2850	1920	1896	219.1	2389	149	815	142	86	92	A, B, C, D, E, F
TWI 6.18-22-B-SD	SD	2850	1920	1896	219.1	2389	149	815	142	86	92	A, B, C, D, E, F
TWI 6.18-22-B-SD-R	SD-R	2850	1970	1949	219.1	2502	69	1000	142	86	99	A, B, C, D, E, F

[1] On request, [3] For power cable in accordance with I_N, max. ø for threaded connection, [7] Weight of pressure shroud

Wilo-Sub TWI 6.18..-B

Information for order placements

Wilo-Sub...	Type of motor	🚚	Art no.	Art. no. for cooling jacket pipe	
				for vertical installation (B)	*for horizontal installation (D)*
TWI 6.18-01-B	DM	L	6043317	6041871	6042336
TWI 6.18-02-B	DM	L	6043318	6041873	6042338
TWI 6.18-04-B	DM	L	6043319	6041873	6042338
TWI 6.18-05-B	DM	L	6043320	6041894	6042357
TWI 6.18-06-B	DM	L	6043321	6041894	6042357
TWI 6.18-07-B	DM	L	6043322	6041894	6042357
TWI 6.18-10-B	DM	L	6043323	6041890	6042353
TWI 6.18-13-B	DM	L	6043324	6041891	6042354
TWI 6.18-17-B	DM	L	6043325	6041891	6042354
TWI 6.18-20-B	DM	L	6043326	6041891	6042354
TWI 6.18-20-B-SD	SD	A	6043341	6041891	6042354
TWI 6.18-20-B-SD-R	SD-R	A	6047769	6042320	6042370
TWI 6.18-22-B	DM	K	6043327	6041891	6042354
TWI 6.18-22-B-SD	SD	A	6043342	6041891	6042354
TWI 6.18-22-B-SD-R	SD-R	A	6047770	6042318	6042369

🚚= ready for delivery, L = stock article, C = order-specific production approx. 2 weeks, K = order-specific production approx. 4 weeks, A = delivery time on request

Wilo-Sub TWI 6.18..-B

Pump curves Wilo-Sub TWI 6.18..-B

Minimum Efficiency Index (MEI): ≥ 0.4

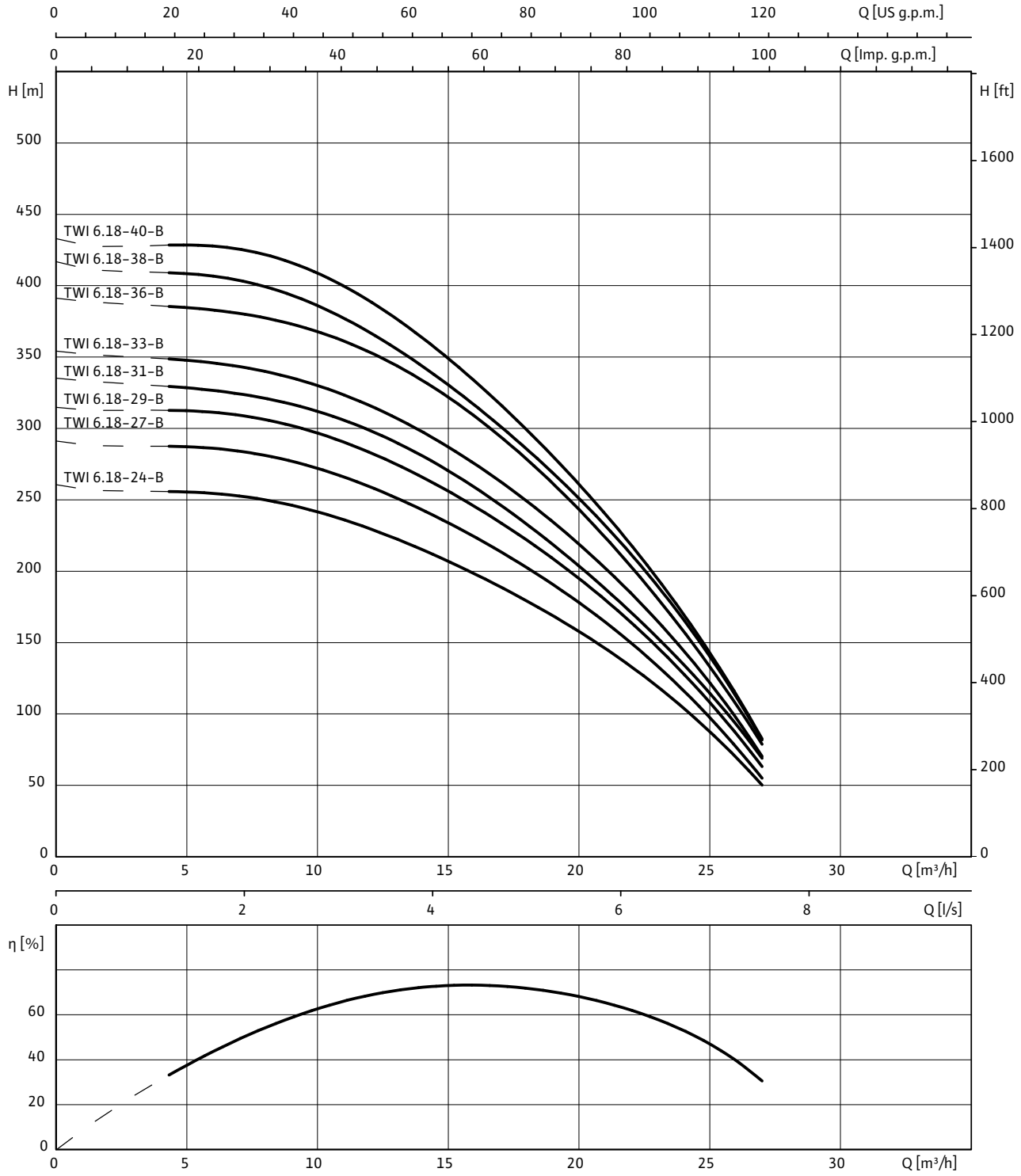

3~400 V, 50 Hz, p = 1 kg/dm^3, v = 1x10^{-6} m^2/s, ISO 9906 Annex A, η = pump efficiency

Wilo-Sub TWI 6.18..-B

Motor data

Wilo-Sub...	Type of motor	Motor diameter	Mains connection	Nominal motor power	Nominal current	Length of connecting cable	Cable cross-section
		Ø		P_2	I_N		
		"		kW	A	m	mm^2
TWI 6.18-24-B	DM	6	3~400 V, 50 Hz	15	31.3	4	4G4
TWI 6.18-24-B-SD	SD	6	3~400 V, 50 Hz	15	31.3	4	2x 4G4
TWI 6.18-24-B-SD-R	SD-R	6	3~400 V, 50 Hz	13	28.5	10	2x 4G2.5
TWI 6.18-27-B	DM	6	3~400 V, 50 Hz	15	31.3	4	4G4
TWI 6.18-27-B-SD	SD	6	3~400 V, 50 Hz	15	31.3	4	2x 4G4
TWI 6.18-27-B-SD-R	SD-R	6	3~400 V, 50 Hz	15	32	10	2x 4G2.5
TWI 6.18-29-B	DM	6	3~400 V, 50 Hz	18.5	38.5	4	4G4
TWI 6.18-29-B-SD	SD	6	3~400 V, 50 Hz	18.5	38.5	4	2x 4G4
TWI 6.18-29-B-SD-R	SD-R	6	3~400 V, 50 Hz	18.5	40	10	2x 4G2.5
TWI 6.18-31-B	DM	6	3~400 V, 50 Hz	18.5	38.5	4	4G4
TWI 6.18-31-B-SD	SD	6	3~400 V, 50 Hz	18.5	38.5	4	2x 4G4
TWI 6.18-31-B-SD-R	SD-R	6	3~400 V, 50 Hz	18.5	40	10	2x 4G2.5
TWI 6.18-33-B	DM	6	3~400 V, 50 Hz	18.5	38.5	4	4G4
TWI 6.18-33-B-SD	SD	6	3~400 V, 50 Hz	18.5	38.5	4	2x 4G4
TWI 6.18-33-B-SD-R	SD-R	6	3~400 V, 50 Hz	18.5	40	10	2x 4G2.5
TWI 6.18-36-B	DM	6	3~400 V, 50 Hz	22	45.3	4	4G4
TWI 6.18-36-B-SD	SD	6	3~400 V, 50 Hz	22	45.3	4	2x 4G4
TWI 6.18-36-B-SD-R	SD-R	6	3~400 V, 50 Hz	22	47.5	10	2x 4G2.5
TWI 6.18-38-B	DM	6	3~400 V, 50 Hz	22	45.3	4	4G4
TWI 6.18-38-B-SD	SD	6	3~400 V, 50 Hz	22	45.3	4	2x 4G4
TWI 6.18-38-B-SD-R	SD-R	6	3~400 V, 50 Hz	22	47.5	10	2x 4G2.5
TWI 6.18-40-B	DM	6	3~400 V, 50 Hz	22	45.3	4	4G4
TWI 6.18-40-B-SD	SD	6	3~400 V, 50 Hz	22	45.3	4	2x 4G4
TWI 6.18-40-B-SD-R	SD-R	6	3~400 V, 50 Hz	22	47.5	10	2x 4G2.5

Flange dimensions

Wilo-Sub...	Connection			Pressure class			Dimensions		
	DN1	*DN2*	*DN3*	PN_1	PN_2	PN_3	*D2*	*K*	*D*
	mm			bar			mm		
TWI 6.18...	Rp 2½	–	–	10-40	–	–	–	–	–
TWI 6.18...	–	DN 50	–	–	10-40	–	4x18	125	165
TWI 6.18...	–	–	DN 80	–	–	10	8x18	160	200
TWI 6.18...	–	–	DN 100	–	–	10	8x18	180	220

Raw water intake

Single pumps

Wilo-Sub TWI 6.18..-B

Dimension drawing Wilo-Sub TWI 6.18

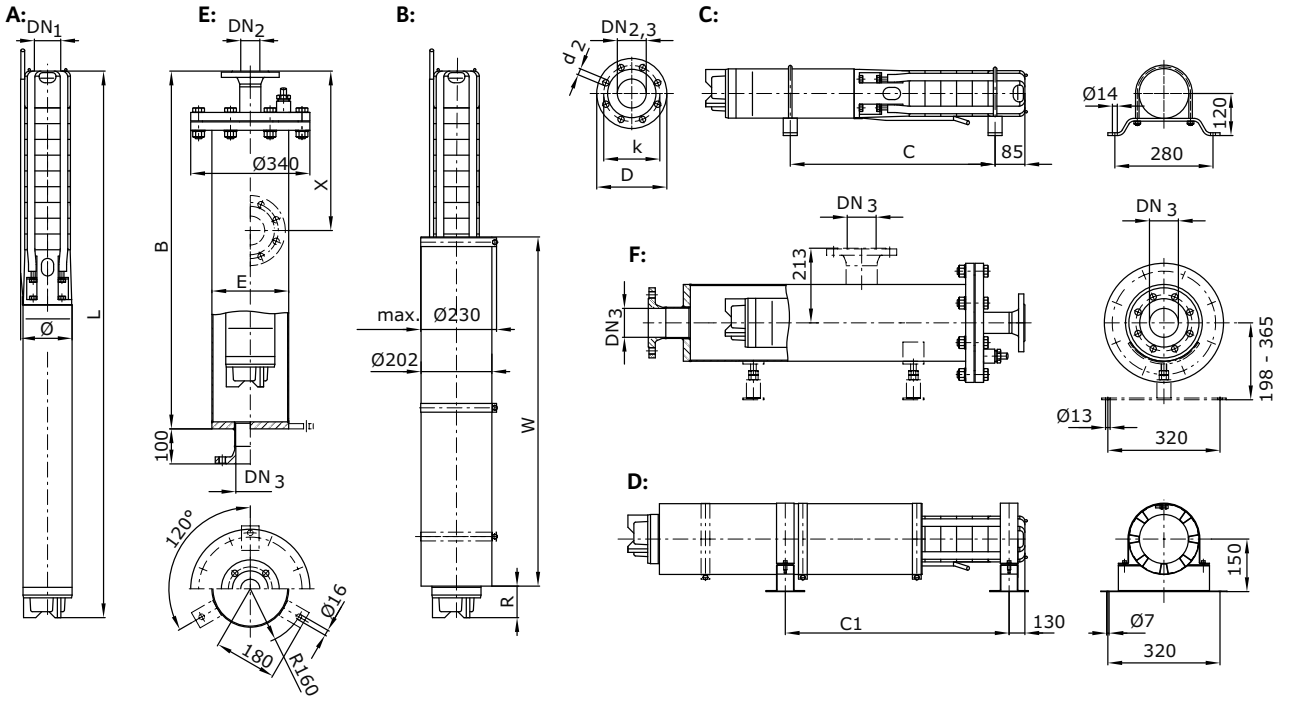

A = vertical, B = vertical with cooling jacket, C = horizontal, D = horizontal with cooling jacket, E = vertical with pressure shroud, F = horizontal with pressure shroud

Dimensions, weights

Wilo-Sub...	Type of motor	Dimensions								Weight	Weight of unit	Installation
		B	*C*	*C1*	*E*	*L*	*R*	*W*	*ø* [3]	*Jacket*[7]	*m*	
		mm								kg		
TWI 6.18-24-B	DM	2850	2040	2017	219.1	2510	149	815	142	86	95	A, B, C, D, E, F
TWI 6.18-24-B-SD	SD	2850	2040	2017	219.1	2510	149	815	142	86	95	A, B, C, D, E, F
TWI 6.18-24-B-SD-R	SD-R	3000	2090	2070	219.1	2623	69	1000	142	89	102	A, B, C, D, E, F
TWI 6.18-27-B	DM	3000	2220	2199	219.1	2692	149	815	142	89	99	A, B, C, D, E, F
TWI 6.18-27-B-SD	SD	3000	2220	2199	219.1	2692	149	815	142	89	99	A, B, C, D, E, F
TWI 6.18-27-B-SD-R	SD-R	1)	1)	2277	1)	2855	119	1000	142	1)	112	A, B, C, D, E, F
TWI 6.18-29-B	DM	1)	1)	2353	1)	2879	105	925	142	1)	109	A, B, C, D, E, F
TWI 6.18-29-B-SD	SD	1)	1)	2353	1)	2879	105	925	142	1)	109	A, B, C, D, E, F
TWI 6.18-29-B-SD-R	SD-R	1)	1)	2294	1)	3041	84	1100	142	1)	122	A, B, C, D, E, F
TWI 6.18-31-B	DM	1)	1)	2474	1)	3000	105	925	142	1)	112	A, B, C, D, E, F
TWI 6.18-31-B-SD	SD	1)	1)	2474	1)	3000	105	925	142	1)	112	A, B, C, D, E, F
TWI 6.18-31-B-SD-R	SD-R	1)	1)	2415	1)	3162	84	1100	142	1)	125	A, B, C, D, E, F
TWI 6.18-33-B	DM	1)	1)	2595	1)	3121	105	925	142	1)	115	A, B, C, D, E, F
TWI 6.18-33-B-SD	SD	1)	1)	2595	1)	3121	105	925	142	1)	115	A, B, C, D, E, F
TWI 6.18-33-B-SD-R	SD-R	1)	1)	2536	1)	3283	84	1100	142	1)	127	A, B, C, D, E, F
TWI 6.18-36-B	DM	1)	1)	2809	1)	3367	95	1000	142	1)	125	A, B, C, D, E, F
TWI 6.18-36-B-SD	SD	1)	1)	2809	1)	3367	95	1000	142	1)	125	A, B, C, D, E, F
TWI 6.18-36-B-SD-R	SD-R	1)	1)	2717	1)	3539	159	1100	142	1)	139	A, B, C, D, E, F

[1] On request, [3] For power cable in accordance with I_N, max. ø for threaded connection, [7] Weight of pressure shroud

Wilo-Sub TWI 6.18..-B

Dimensions, weights

Wilo-Sub...	Type of motor	Dimensions								Weight	Weight of unit	Installation
		B	*C*	*C1*	*E*	*L*	*R*	*W*	*ø* [3]	*Jacket* [7]	*m*	
		mm								kg		
TWI 6.18-38-B	DM	[1]	[1]	2930	[1]	3488	95	1000	142	[1]	128	A, B, C, D, E, F
TWI 6.18-38-B-SD	SD	[1]	[1]	2930	[1]	3488	95	1000	142	[1]	128	A, B, C, D, E, F
TWI 6.18-38-B-SD-R	SD-R	[1]	[1]	2838	[1]	3660	159	1100	142	[1]	142	A, B, C, D, E, F
TWI 6.18-40-B	DM	[1]	[1]	3051	[1]	3609	95	1000	142	[1]	131	A, B, C, D, E, F
TWI 6.18-40-B-SD	SD	[1]	[1]	3051	[1]	3609	95	1000	142	[1]	131	A, B, C, D, E, F
TWI 6.18-40-B-SD-R	SD-R	[1]	[1]	2959	[1]	3781	159	1100	142	[1]	145	A, B, C, D, E, F

[1] On request, [3] For power cable in accordance with I_N, max. ø for threaded connection, [7] Weight of pressure shroud

Information for order placements

Wilo-Sub...	Type of motor	🚚	Art no.	Art. no. for cooling jacket pipe	
				for vertical installation (B)	*for horizontal installation (D)*
TWI 6.18-24-B	DM	K	6043328	6041891	6042354
TWI 6.18-24-B-SD	SD	A	6043343	6041891	6042354
TWI 6.18-24-B-SD-R	SD-R	A	6047771	6042318	6042369
TWI 6.18-27-B	DM	K	6043329	6041891	6042354
TWI 6.18-27-B-SD	SD	A	6043344	6041891	6042354
TWI 6.18-27-B-SD-R	SD-R	A	6047772	6042318	6042369
TWI 6.18-29-B	DM	K	6043330	6041883	6042347
TWI 6.18-29-B-SD	SD	A	6043345	6041883	6042347
TWI 6.18-29-B-SD-R	SD-R	A	6047773	6041906	6042367
TWI 6.18-31-B	DM	A	6043336	6041883	6042347
TWI 6.18-31-B-SD	SD	A	6043346	6041883	6042347
TWI 6.18-31-B-SD-R	SD-R	A	6047774	6041906	6042367
TWI 6.18-33-B	DM	A	6043337	6041883	6042347
TWI 6.18-33-B-SD	SD	A	6043347	6041883	6042347
TWI 6.18-33-B-SD-R	SD-R	A	6047775	6041906	6042367
TWI 6.18-36-B	DM	A	6043338	6041886	6042349
TWI 6.18-36-B-SD	SD	A	6043348	6041886	6042349
TWI 6.18-36-B-SD-R	SD-R	A	6047776	6041906	6042367
TWI 6.18-38-B	DM	A	6043339	6041886	6042349
TWI 6.18-38-B-SD	SD	A	6043349	6041886	6042349
TWI 6.18-38-B-SD-R	SD-R	A	6047777	6041906	6042367
TWI 6.18-40-B	DM	A	6043340	6041886	6042349
TWI 6.18-40-B-SD	SD	A	6043350	6041886	6042349
TWI 6.18-40-B-SD-R	SD-R	A	6047778	6041906	6042367

🚚= ready for delivery, L = stock article, C = order-specific production approx. 2 weeks, K = order-specific production approx. 4 weeks, A = delivery time on request

Wilo-Sub TWI 6.30..-B

Pump curves Wilo-Sub TWI 6.30..-B

Minimum Efficiency Index (MEI): ≥ 0.4

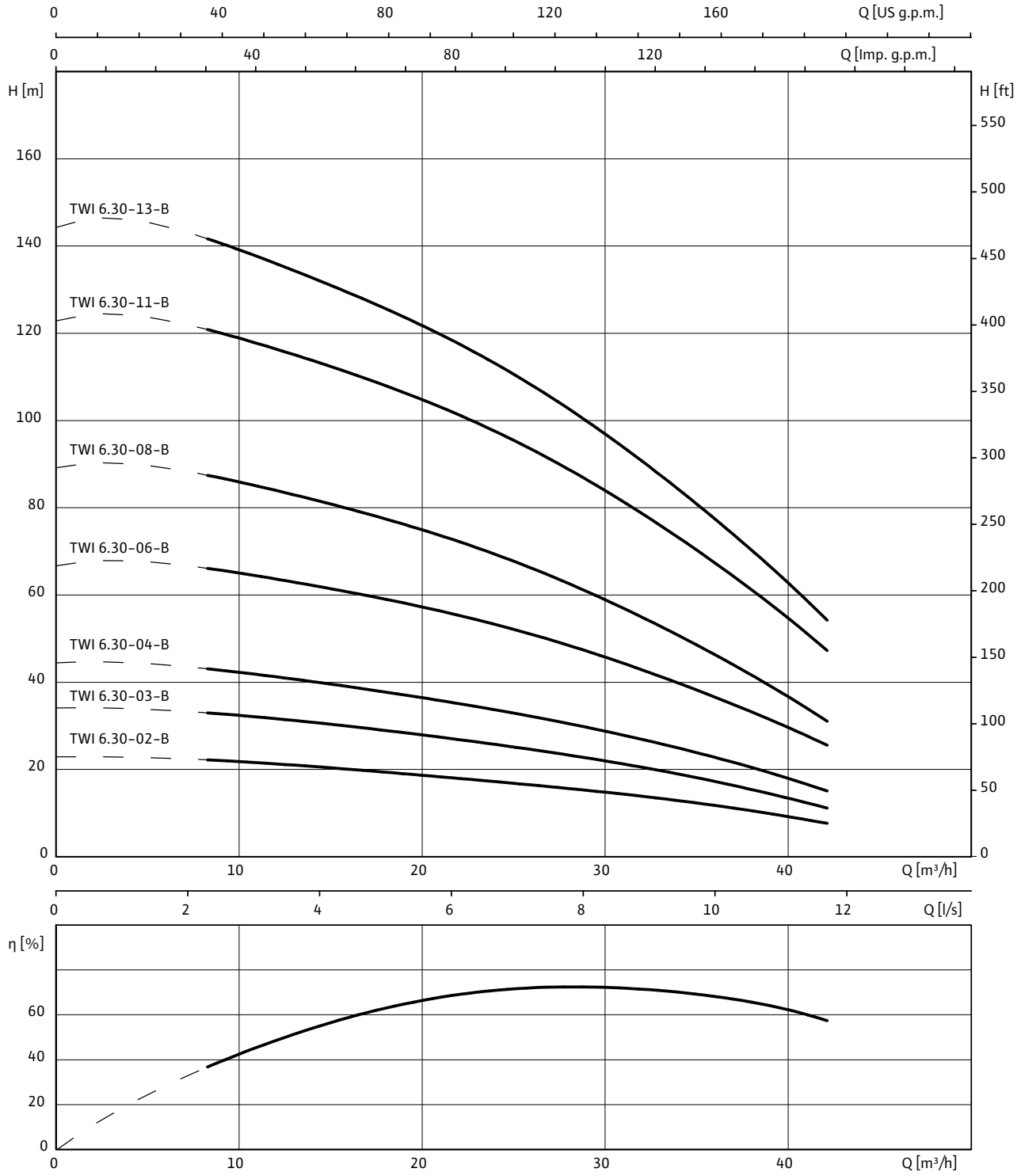

3~400 V, 50 Hz, p = 1 kg/dm^3, v = 1x10^{-6} m^2/s, ISO 9906 Annex A, η = pump efficiency

Wilo-Sub TWI 6.30..-B

Motor data

Wilo-Sub...	Type of motor	Motor diameter	Mains connection	Nominal motor power	Nominal current	Length of connecting cable	Cable cross-section
		Ø		P_2	I_N		
		"		kW	A	m	mm^2
TWI 6.30-02-B	DM	4	3~400 V, 50 Hz	2.2	5.9	5	4G1.5
TWI 6.30-03-B	DM	4	3~400 V, 50 Hz	3	7.8	5	4G1.5
TWI 6.30-04-B	DM	4	3~400 V, 50 Hz	3.7	9.1	5	4G1.5
TWI 6.30-06-B	DM	4	3~400 V, 50 Hz	5.5	13.7	5	4G1.5
TWI 6.30-08-B	DM	6	3~400 V, 50 Hz	7.5	16	4	4G4
TWI 6.30-11-B	DM	6	3~400 V, 50 Hz	11	23.3	4	4G4
TWI 6.30-11-B-SD	SD	6	3~400 V, 50 Hz	11	23.3	4	2x 4G4
TWI 6.30-13-B	DM	6	3~400 V, 50 Hz	15	31.3	4	4G4
TWI 6.30-13-B-SD	SD	6	3~400 V, 50 Hz	15	31.3	4	2x 4G4

Flange dimensions

Wilo-Sub...	Connection			Pressure class			Dimensions		
	DN1	*DN2*	*DN3*	PN_1	PN_2	PN_3	*D2*	*K*	*D*
	mm			bar			mm		
TWI 6.30...	Rp 3	–	–	10-40	–	–	–	–	–
TWI 6.30...	–	DN 80	DN 80	–	10-40	10	8x18	160	200
TWI 6.30...	–	–	DN 100	–	–	10	8x18	180	220

[1] On request, [3] For power cable in accordance with I_N, max. ø for threaded connection, [7] Weight of pressure shroud

Raw water intake

Single pumps

Wilo-Sub TWI 6.30..-B

Dimension drawing Wilo-Sub TWI 6.30

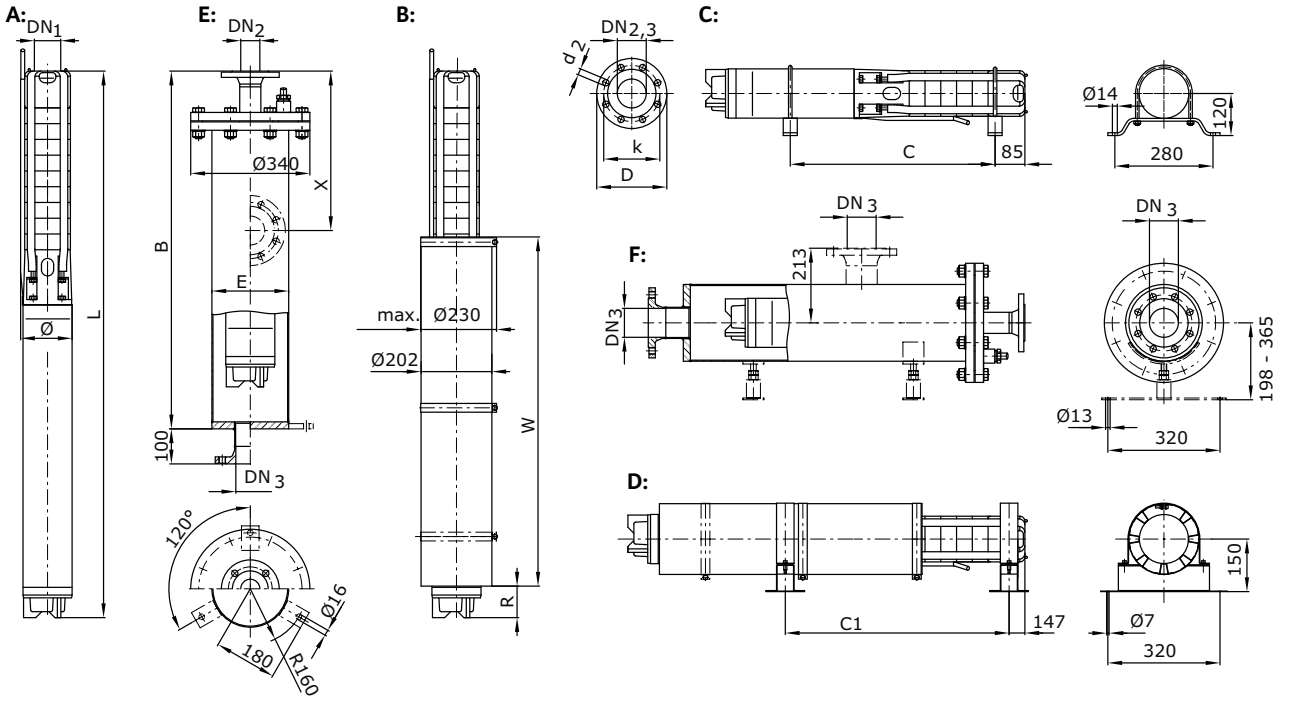

A = vertical, B = vertical with cooling jacket, C = horizontal, D = horizontal with cooling jacket, E = vertical with pressure shroud, F = horizontal with pressure shroud

Dimensions, weights

Wilo-Sub...	Type of motor	Dimensions								Weight	Weight of unit	Installation
		B	*C*	*C1*	*E*	*L*	*R*	*W*	*ø* [3]	*Jacket*[7]	*m*	
		mm								kg		
TWI 6.30-02-B	DM	1350	560	521	219.1	807	3	650	142	64	22.4	A, B, C, D, E, F
TWI 6.30-03-B	DM	1350	730	693	219.1	1055	59	650	142	64	30	A, B, C, D, E, F
TWI 6.30-04-B	DM	1650	850	809	219.1	1189	99	650	142	69	34.5	A, B, C, D, E, F
TWI 6.30-06-B	DM	1950	1110	1076	219.1	1533	84	815	142	74	45.1	A, B, C, D, E, F
TWI 6.30-08-B	DM	1950	1270	1239	219.1	1684	140	815	149	74	64	A, B, C, D, E, F
TWI 6.30-11-B	DM	2550	1600	1560	219.1	2037	109	815	149	83	75	A, B, C, D, E, F
TWI 6.30-11-B-SD	SD	2550	1600	1560	219.1	2037	109	815	149	83	75	A, B, C, D, E, F
TWI 6.30-13-B	DM	2550	1820	1784	219.1	2294	64	925	149	83	84	A, B, C, D, E, F
TWI 6.30-13-B-SD	SD	2550	1820	1784	219.1	2294	64	925	149	83	84	A, B, C, D, E, F
TWI 06.30-13-NB	NU 611-2/13	2850	1870	1837	219.1	2407	94	1000	149	88	91	A, B, C, D, E, F

[1] On request, [3] For power cable in accordance with I_N, max. ø for threaded connection, [7] Weight of pressure shroud

Wilo-Sub TWI 6.30..-B

Information for order placements

Wilo-Sub...	Type of motor	🚚	Art no.	Art. no. for cooling jacket pipe	
				for vertical installation (B)	*for horizontal installation (D)*
TWI 6.30-02-B	DM	L	6043406	6041894	6042357
TWI 6.30-03-B	DM	L	6043407	6041894	6042357
TWI 6.30-04-B	DM	L	6043408	6041894	6042357
TWI 6.30-06-B	DM	L	6043409	6041890	6042353
TWI 6.30-08-B	DM	L	6043410	6041891	6042354
TWI 6.30-11-B	DM	L	6043411	6041891	6042354
TWI 6.30-11-B-SD	SD	K	6043427	6041891	6042354
TWI 6.30-13-B	DM	L	6043412	6041883	6042347
TWI 6.30-13-B-SD	SD	K	6043428	6041883	6042347

🚚= ready for delivery, L = stock article, C = order-specific production approx. 2 weeks, K = order-specific production approx. 4 weeks, A = delivery time on request

Wilo-Sub TWI 6.30..-B

Pump curves Wilo-Sub TWI 6.30..-B

Minimum Efficiency Index (MEI): ≥ 0.4

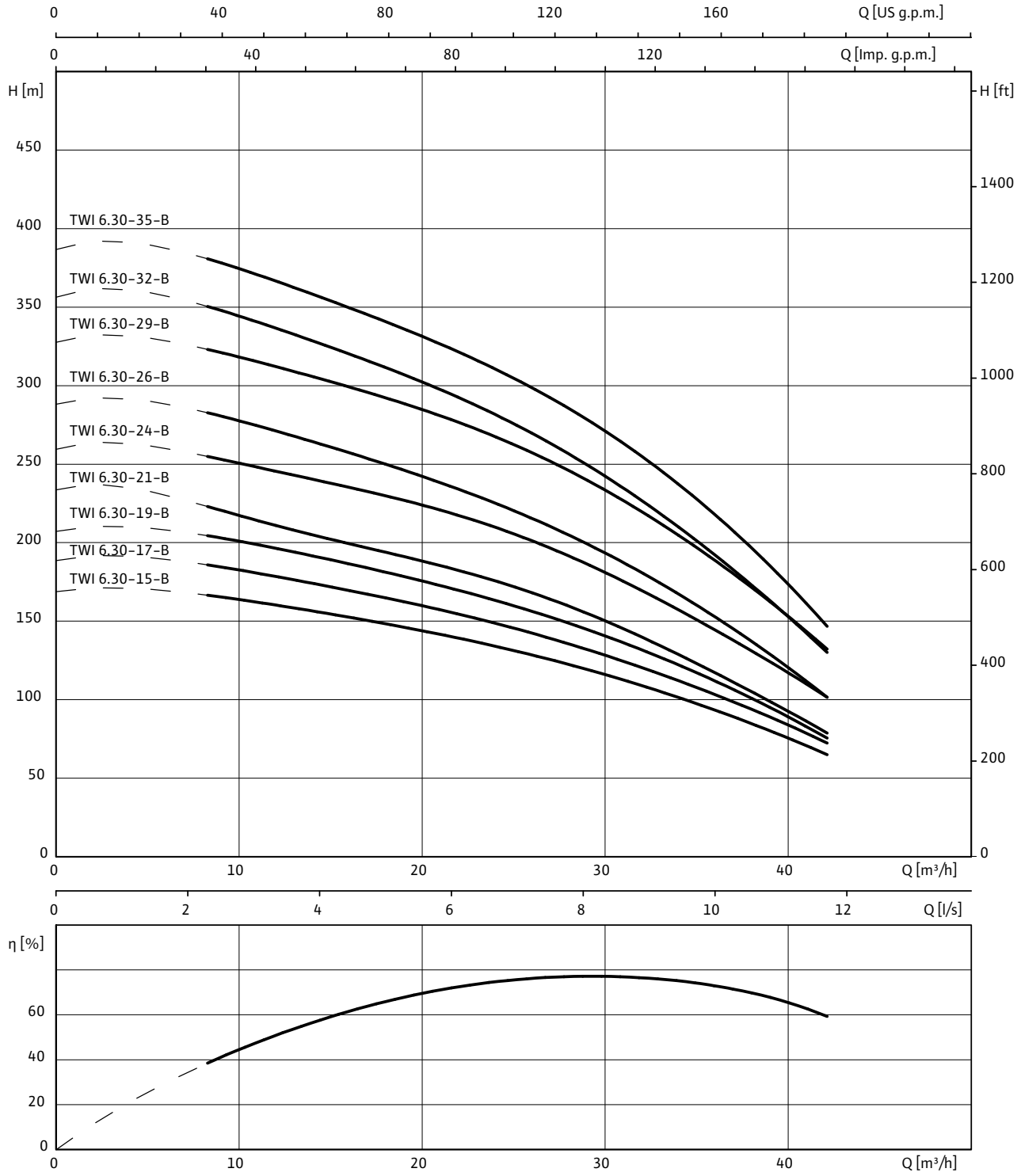

3~400 V, 50 Hz, p = 1 kg/dm^3, v = 1x10^{-6} m^2/s, ISO 9906 Annex A, η = pump efficiency

Wilo-Sub TWI 6.30..-B

Motor data

Wilo-Sub...	Type of motor	Motor diameter	Mains connection	Nominal motor power	Nominal current	Length of connecting cable	Cable cross-section
		Ø		P_2	I_N		
		"		kW	A	m	mm^2
TWI 6.30-15-B	DM	6	3~400 V, 50 Hz	15	31.3	4	4G4
TWI 6.30-15-B-SD	SD	6	3~400 V, 50 Hz	15	31.3	4	2x 4G4
TWI 6.30-17-B	DM	6	3~400 V, 50 Hz	15	31.3	4	4G4
TWI 6.30-17-B-SD	SD	6	3~400 V, 50 Hz	15	31.3	4	2x 4G4
TWI 6.30-17-B-SD-R	SD-R	6	3~400 V, 50 Hz	15	32	10	2x 4G2.5
TWI 6.30-19-B	DM	6	3~400 V, 50 Hz	18.5	38.5	4	4G4
TWI 6.30-19-B-SD	SD	6	3~400 V, 50 Hz	18.5	38.5	4	2x 4G4
TWI 6.30-19-B-SD-R	SD-R	6	3~400 V, 50 Hz	18.5	40	10	2x 4G2.5
TWI 6.30-21-B	DM	6	3~400 V, 50 Hz	18.5	38.5	4	4G4
TWI 6.30-21-B-SD	SD	6	3~400 V, 50 Hz	18.5	38.5	4	2x 4G4
TWI 6.30-21-B-SD-R	SD-R	6	3~400 V, 50 Hz	18.5	40	10	2x 4G2.5
TWI 6.30-24-B	DM	6	3~400 V, 50 Hz	22	45.3	4	4G4
TWI 6.30-24-B-SD	SD	6	3~400 V, 50 Hz	22	45.3	4	2x 4G4
TWI 6.30-24-B-SD-R	SD-R	6	3~400 V, 50 Hz	22	47.5	10	2x 4G2.5
TWI 6.30-26-B	DM	6	3~400 V, 50 Hz	30	63.5	4	4G4
TWI 6.30-26-B-SD	SD	6	3~400 V, 50 Hz	30	63.5	4	2x 4G4
TWI 6.30-26-B-SD-R	SD-R	6	3~400 V, 50 Hz	22	47.5	10	2x 4G2.5
TWI 6.30-29-B	DM	6	3~400 V, 50 Hz	30	63.5	4	4G4
TWI 6.30-29-B-SD	SD	6	3~400 V, 50 Hz	30	63.5	4	2x 4G4
TWI 6.30-29-B-SD-R	SD-R	6	3~400 V, 50 Hz	30	63	10	2x 4G4
TWI 6.30-32-B	DM	6	3~400 V, 50 Hz	30	63.5	4	4G4
TWI 6.30-32-B-SD	SD	6	3~400 V, 50 Hz	30	63.5	4	2x 4G4
TWI 6.30-32-B-SD-R	SD-R	6	3~400 V, 50 Hz	30	63	10	2x 4G4
TWI 6.30-35-B	DM	6	3~400 V, 50 Hz	30	63.5	4	4G4
TWI 6.30-35-B-SD	SD	6	3~400 V, 50 Hz	30	63.5	4	2x 4G4
TWI 6.30-35-B-SD-R	SD-R	6	3~400 V, 50 Hz	30	63	10	2x 4G4

Flange dimensions

Wilo-Sub...	Connection			Pressure class			Dimensions		
	DN1	*DN2*	*DN3*	PN_1	PN_2	PN_3	*D2*	*K*	*D*
	mm			bar			mm		
TWI 6.30...	Rp 3	–	–	10-40	–	–	–	–	–
TWI 6.30...	–	DN 80	DN 80	–	10-40	10	8x18	160	200
TWI 6.30...	–	–	DN 100	–	–	10	8x18	180	220

Raw water intake

Single pumps

Wilo-Sub TWI 6.30..-B

Dimension drawing Wilo-Sub TWI 6.30

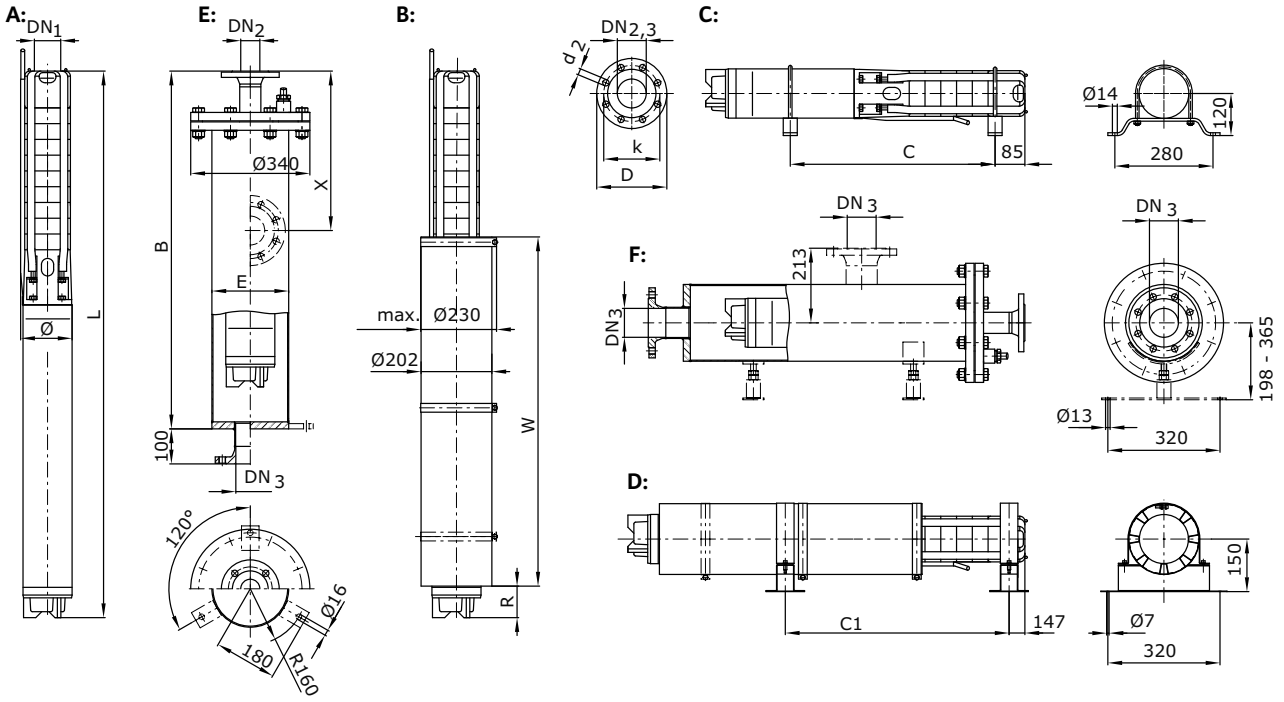

A = vertical, B = vertical with cooling jacket, C = horizontal, D = horizontal with cooling jacket, E = vertical with pressure shroud, F = horizontal with pressure shroud

Dimensions, weights

Wilo-Sub...	Type of motor	Dimensions								Weight	Weight of unit	Installation
		B	*C*	*C1*	*E*	*L*	*R*	*W*	*ø* [3]	*Jacket* [7]	*m*	
		mm								kg		
TWI 6.30-15-B	DM	2850	2020	1976	219.1	2486	64	925	149	88	87	A, B, C, D, E, F
TWI 6.30-15-B-SD	SD	2850	2020	1976	219.1	2486	64	925	149	88	87	A, B, C, D, E, F
TWI 6.30-17-B	DM	[1]	2210	2168	[1]	2678	64	925	149	[1]	91	A, B, C, D, E, F
TWI 6.30-17-B-SD	SD	[1]	2210	2168	[1]	2678	64	925	149	[1]	91	A, B, C, D, E, F
TWI 6.30-17-B-SD-R	SD-R	[1]	2290	2246	[1]	2841	44	1100	149	[1]	103	A, B, C, D, E, F
TWI 6.30-19-B	DM	[1]	[1]	2393	[1]	2936	55	1000	149	[1]	101	A, B, C, D, E, F
TWI 6.30-19-B-SD	SD	[1]	[1]	2393	[1]	2936	55	1000	149	[1]	101	A, B, C, D, E, F
TWI 6.30-19-B-SD-R	SD-R	[1]	[1]	2309	[1]	3098	109	1100	149	[1]	113	A, B, C, D, E, F
TWI 6.30-21-B	DM	[1]	[1]	2585	[1]	3128	55	1000	149	[1]	104	A, B, C, D, E, F
TWI 6.30-21-B-SD	SD	[1]	[1]	2585	[1]	3128	55	1000	149	[1]	104	A, B, C, D, E, F
TWI 6.30-21-B-SD-R	SD-R	[1]	[1]	2501	[1]	3290	109	1100	149	[1]	117	A, B, C, D, E, F
TWI 6.30-24-B	DM	[1]	[1]	2906	[1]	3481	120	1000	149	[1]	115	A, B, C, D, E, F
TWI 6.30-24-B-SD	SD	[1]	[1]	2906	[1]	3481	120	1000	149	[1]	115	A, B, C, D, E, F
TWI 6.30-24-B-SD-R	SD-R	[1]	[1]	2789	[1]	3653	84	1200	149	[1]	129	A, B, C, D, E, F
TWI 6.30-26-B	DM	[1]	[1]	2981	[1]	3803	150	1100	149	[1]	133	A, B, C, D, E, F
TWI 6.30-26-B-SD	SD	[1]	[1]	2981	[1]	3803	150	1100	149	[1]	133	A, B, C, D, E, F
TWI 6.30-26-B-SD-R	SD-R	[1]	[1]	2981	[1]	3845	84	1200	149	[1]	132	A, B, C, D, E, F

[1] On request, [3] For power cable in accordance with I_N, max. ø for threaded connection, [7] Weight of pressure shroud

Wilo-Sub TWI 6.30..-B

Dimensions, weights

Wilo-Sub...	Type of motor	Dimensions								Weight	Weight of unit	Installation
		B	*C*	*C1*	*E*	*L*	*R*	*W*	*ø* [3]	*Jacket* [7]	*m*	
		mm								kg		
TWI 6.30-29-B	DM	[1]	[1]	3269	[1]	4091	150	1100	149	[1]	138	A, B, C, D, E, F
TWI 6.30-29-B-SD	SD	[1]	[1]	3269	[1]	4091	150	1100	149	[1]	138	A, B, C, D, E, F
TWI 6.30-29-B-SD-R	SD-R	[1]	[1]	3434	[1]	4313	99	1365	152	[1]	151	A, B, C, D, E, F
TWI 6.30-32-B	DM	[1]	[1]	3557	[1]	4379	150	1100	149	[1]	143	A, B, C, D, E, F
TWI 6.30-32-B-SD	SD	[1]	[1]	3557	[1]	4379	150	1100	149	[1]	143	A, B, C, D, E, F
TWI 6.30-32-B-SD-R	SD-R	[1]	[1]	3722	[1]	4601	99	1365	152	[1]	156	A, B, C, D, E, F
TWI 6.30-35-B	DM	[1]	[1]	3845	[1]	4667	150	1100	149	[1]	148	A, B, C, D, E, F
TWI 6.30-35-B-SD	SD	[1]	[1]	3845	[1]	4667	150	1100	149	[1]	148	A, B, C, D, E, F
TWI 6.30-35-B-SD-R	SD-R	[1]	[1]	4010	[1]	4889	99	1365	152	[1]	161	A, B, C, D, E, F

[1] On request, [3] For power cable in accordance with I_N, max. ø for threaded connection, [7] Weight of pressure shroud

Information for order placements

Wilo-Sub...	Type of motor	🚚	Art no.	Art. no. for cooling jacket pipe	
				for vertical installation (B)	*for horizontal installation (D)*
TWI 6.30-15-B	DM	L	6043418	6041883	6042347
TWI 6.30-15-B-SD	SD	K	6043429	6041883	6042347
TWI 6.30-17-B	DM	L	6043419	6041883	6042347
TWI 6.30-17-B-SD	SD	K	6043430	6041883	6042347
TWI 6.30-17-B-SD-R	SD-R	A	6047779	6042318	6042369
TWI 6.30-19-B	DM	K	6043420	6041886	6042349
TWI 6.30-19-B-SD	SD	A	6043431	6041886	6042349
TWI 6.30-19-B-SD-R	SD-R	A	6047780	6041906	6042367
TWI 6.30-21-B	DM	K	6043421	6041886	6042349
TWI 6.30-21-B-SD	SD	A	6043432	6041886	6042349
TWI 6.30-21-B-SD-R	SD-R	A	6047781	6041906	6042367
TWI 6.30-24-B	DM	K	6043422	6041886	6042349
TWI 6.30-24-B-SD	SD	A	6043433	6041886	6042349
TWI 6.30-24-B-SD-R	SD-R	A	6047782	6041903	6042367
TWI 6.30-26-B	DM	A	6043423	6041875	6042339
TWI 6.30-26-B-SD	SD	A	6043434	6041875	6042339
TWI 6.30-26-B-SD-R	SD-R	A	6047783	6041903	6042367
TWI 6.30-29-B	DM	A	6043424	6041875	6042339
TWI 6.30-29-B-SD	SD	A	6043435	6041875	6042339
TWI 6.30-29-B-SD-R	SD-R	A	6047784	6041904	6042365
TWI 6.30-32-B	DM	A	6043425	6041875	6042339
TWI 6.30-32-B-SD	SD	A	6043436	6041875	6042339
TWI 6.30-32-B-SD-R	SD-R	A	6047785	6041904	6042365
TWI 6.30-35-B	DM	A	6043426	6041875	6042339
TWI 6.30-35-B-SD	SD	A	6043437	6041875	6042339
TWI 6.30-35-B-SD-R	SD-R	A	6047786	6041904	6042365

🚚 = ready for delivery, L = stock article, C = order-specific production approx. 2 weeks, K = order-specific production approx. 4 weeks, A = delivery time on request

Wilo-Sub TWI 6.50..-B

Pump curves Wilo-Sub TWI 6.50..-B

Minimum Efficiency Index (MEI): ≥ 0.4

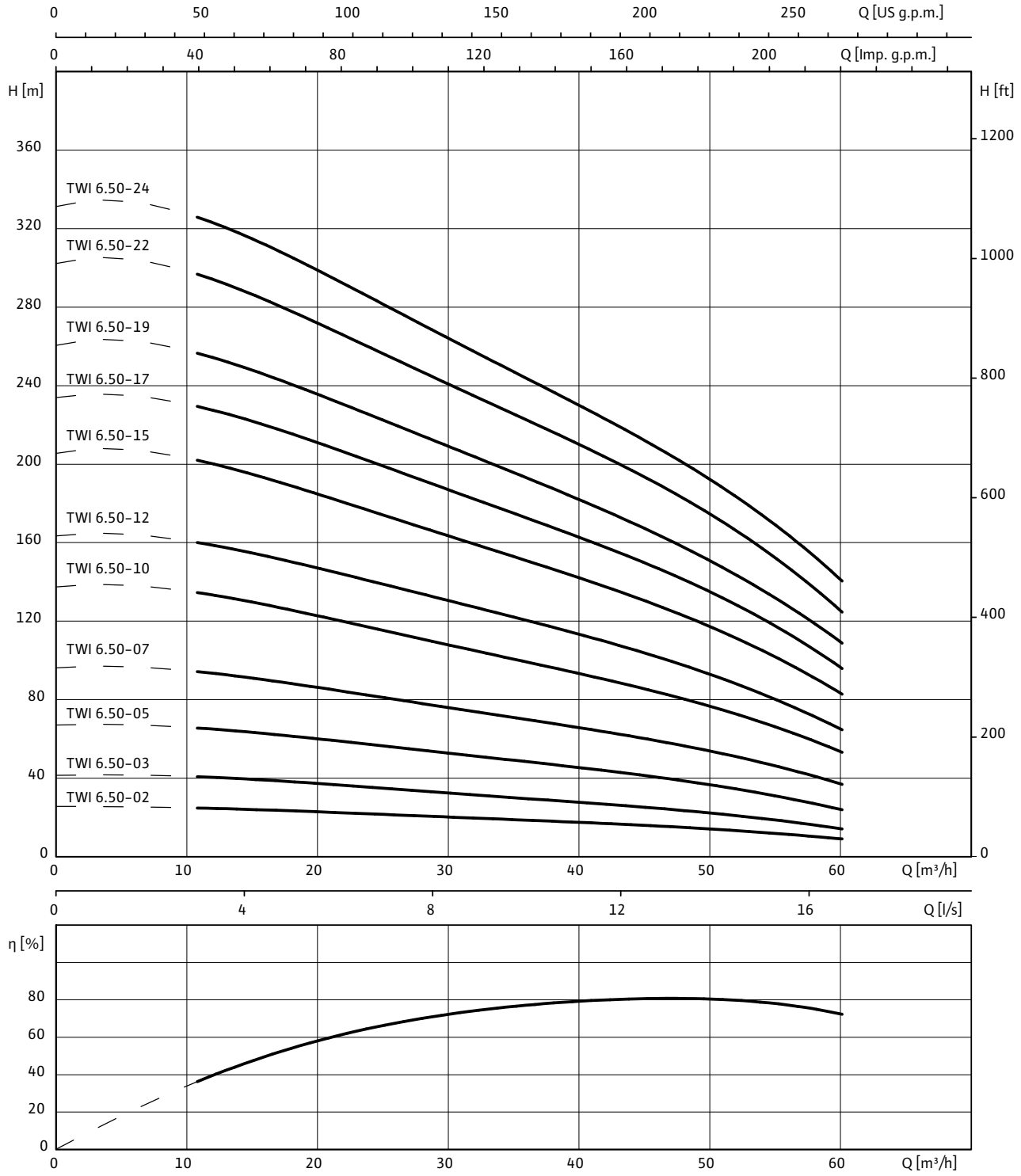

3~400 V, 50 Hz, p = 1 kg/dm^3, v = 1x10^{-6} m^2/s, ISO 9906 Annex A, η = pump efficiency

Wilo-Sub TWI 6.50..-B

Motor data

Wilo-Sub...	Type of motor	Motor diameter	Mains connection	Nominal motor power	Nominal current	Length of connecting cable	Cable cross-section
		Ø		P_2	I_N		
		"		kW	A	m	mm^2
TWI 6.50-02-B	DM	4	3~400 V, 50 Hz	3	7.8	5	4G1.5
TWI 6.50-03-B	DM	4	3~400 V, 50 Hz	5.5	13.7	5	4G1.5
TWI 6.50-05-B	DM	6	3~400 V, 50 Hz	7.5	16	4	4G4
TWI 6.50-07-B	DM	6	3~400 V, 50 Hz	11	23.3	4	4G4
TWI 6.50-07-B-SD	SD	6	3~400 V, 50 Hz	11	23.3	4	2x 4G4
TWI 6.50-10-B	DM	6	3~400 V, 50 Hz	15	31.3	4	4G4
TWI 6.50-10-B-SD	SD	6	3~400 V, 50 Hz	15	31.3	4	2x 4G4
TWI 6.50-12-B	DM	6	3~400 V, 50 Hz	18.5	38.5	4	4G4
TWI 6.50-12-B-SD	SD	6	3~400 V, 50 Hz	18.5	38.5	4	2x 4G4
TWI 6.50-15-B	DM	6	3~400 V, 50 Hz	22	45.3	4	4G4
TWI 6.50-15-B-SD	SD	6	3~400 V, 50 Hz	22	45.3	4	2x 4G4
TWI 6.50-15-B-SD-R	SD-R	6	3~400 V, 50 Hz	22	47.5	10	2x 4G2.5
TWI 6.50-17-B	DM	6	3~400 V, 50 Hz	30	63.5	4	4G4
TWI 6.50-17-B-SD	SD	6	3~400 V, 50 Hz	30	63.5	4	2x 4G4
TWI 6.50-17-B-SD-R	SD-R	6	3~400 V, 50 Hz	26	57	10	2x 4G4
TWI 6.50-19-B	DM	6	3~400 V, 50 Hz	30	63.5	4	4G4
TWI 6.50-19-B-SD	SD	6	3~400 V, 50 Hz	30	63.5	4	2x 4G4
TWI 6.50-19-B-SD-R	SD-R	6	3~400 V, 50 Hz	30	63	10	2x 4G4
TWI 6.50-22-B	DM	6	3~400 V, 50 Hz	37	73	4	4G4
TWI 6.50-22-B-SD	SD	6	3~400 V, 50 Hz	37	73	4	2x 4G4
TWI 6.50-22-B-SD-R	SD-R	6	3~400 V, 50 Hz	34	71	10	2x 4G6
TWI 6.50-24-B	DM	6	3~400 V, 50 Hz	37	73	4	4G4
TWI 6.50-24-B-SD	SD	6	3~400 V, 50 Hz	37	73	4	2x 4G4
TWI 6.50-24-B-SD-R	SD-R	6	3~400 V, 50 Hz	34	71	10	2x 4G6

Flange dimensions

Wilo-Sub...	Connection			Pressure class			Dimensions		
	DN1	*DN2*	*DN3*	PN_1	PN_2	PN_3	*D2*	*K*	*D*
	mm			bar			mm		
TWI 6.50...	Rp 3	–	–	10-40	–	–	–	–	–
TWI 6.50...	–	DN 80	DN 80	–	10-40	10	8x18	160	200
TWI 6.50...	–	–	DN 100	–	–	10	8x18	180	220

[1] On request, [3] For power cable in accordance with I_N, max. ø for threaded connection, [7] Weight of pressure shroud

Wilo-Sub TWI 6.50..-B

Dimension drawing Wilo-Sub TWI 6.50

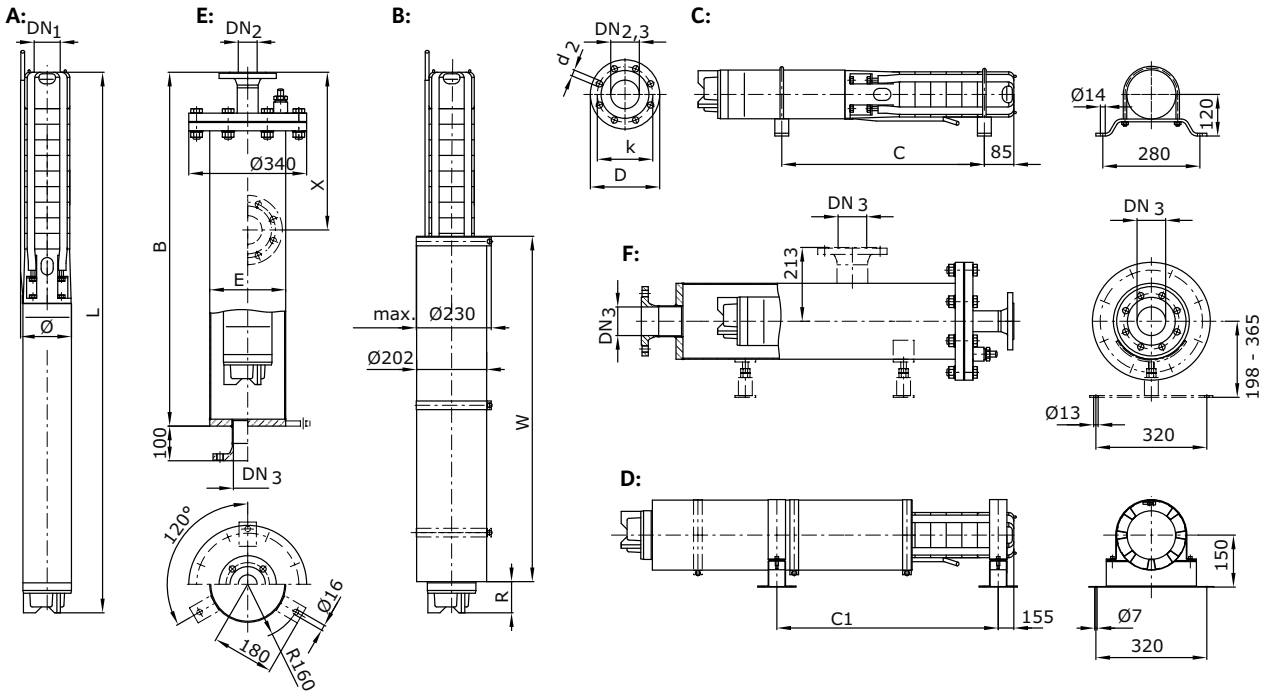

A = vertical, B = vertical with cooling jacket, C = horizontal, D = horizontal with cooling jacket, E = vertical with pressure shroud, F = horizontal with pressure shroud

Dimensions, weights

Wilo-Sub...	Type of motor	Dimensions								Weight	Weight of unit	Installation
		B	*C*	*C1*	*E*	*L*	*R*	*W*	*ø* [3]	*Jacket* [7]	*m*	
		mm								kg		
TWI 6.50-02-B	DM	1350	670	623	219.1	993	67	650	148	64	29.1	A, B, C, D, E, F
TWI 6.50-03-B	DM	1650	830	831	219.1	1296	92	815	148	69	41.4	A, B, C, D, E, F
TWI 6.50-05-B	DM	1950	1070	1028	219.1	1481	52	815	152	74	61	A, B, C, D, E, F
TWI 6.50-07-B	DM	2250	1340	1287	219.1	1772	117	815	152	79	72	A, B, C, D, E, F
TWI 6.50-07-B-SD	SD	2250	1340	1287	219.1	1772	117	815	152	79	72	A, B, C, D, E, F
TWI 6.50-10-B	DM	2550	1710	1658	219.1	2176	72	925	152	83	84	A, B, C, D, E, F
TWI 6.50-10-B-SD	SD	2550	1710	1658	219.1	2176	72	925	152	83	84	A, B, C, D, E, F
TWI 6.50-12-B	DM	2850	1960	1917	219.1	2468	63	1000	152	88	95	A, B, C, D, E, F
TWI 6.50-12-B-SD	SD	2850	1960	1917	219.1	2468	63	1000	152	88	95	A, B, C, D, E, F
TWI 6.50-15-B	DM	[1]	[1]	2289	[1]	2872	127	1000	152	[1]	108	A, B, C, D, E, F
TWI 6.50-15-B-SD	SD	[1]	[1]	2289	[1]	2872	127	1000	152	[1]	108	A, B, C, D, E, F
TWI 6.50-15-B-SD-R	SD-R	[1]	[1]	2163	[1]	3044	192	1100	152	[1]	122	A, B, C, D, E, F
TWI 6.50-17-B	DM	[1]	[1]	2389	[1]	3228	158	1100	152	[1]	127	A, B, C, D, E, F
TWI 6.50-17-B-SD	SD	[1]	[1]	2389	[1]	3228	158	1100	152	[1]	127	A, B, C, D, E, F
TWI 6.50-17-B-SD-R	SD-R	[1]	[1]	2554	[1]	3340	97	1265	152	[1]	132	A, B, C, D, E, F

[1] On request, [3] For power cable in accordance with I_N, max. ø for threaded connection, [7] Weight of pressure shroud

Wilo-Sub TWI 6.50..-B

Dimensions, weights

Wilo-Sub...	Type of motor	Dimensions								Weight	Weight of unit	Installation
		B	*C*	*C1*	*E*	*L*	*R*	*W*	*ø* [3]	*Jacket* [7]	*m*	
		mm								kg		
TWI 6.50-19-B	DM	[1]	[1]	2615	[1]	3454	158	1100	152	[1]	132	A, B, C, D, E, F
TWI 6.50-19-B-SD	SD	[1]	[1]	2615	[1]	3454	158	1100	152	[1]	132	A, B, C, D, E, F
TWI 6.50-19-B-SD-R	SD-R	[1]	[1]	2780	[1]	3676	207	1265	152	[1]	145	A, B, C, D, E, F
TWI 6.50-22-B	DM	[1]	[1]	3229	[1]	4161	103	1540	152	[1]	190	A, B, C, D, E, F
TWI 6.50-22-B-SD	SD	[1]	[1]	3229	[1]	4161	103	1540	152	[1]	190	A, B, C, D, E, F
TWI 6.50-22-B-SD-R	SD-R	[1]	[1]	3119	[1]	4065	92	1430	152	[1]	156	A, B, C, D, E, F
TWI 6.50-24-B	DM	[1]	[1]	3455	[1]	4387	103	1540	152	[1]	194	A, B, C, D, E, F
TWI 6.50-24-B-SD	SD	[1]	[1]	3455	[1]	4387	103	1540	152	[1]	194	A, B, C, D, E, F
TWI 6.50-24-B-SD-R	SD-R	[1]	[1]	3345	[1]	4291	92	1430	152	[1]	160	A, B, C, D, E, F

[1] On request, [3] For power cable in accordance with I_N, max. ø for threaded connection, [7] Weight of pressure shroud

Information for order placements

Wilo-Sub...	Type of motor	🚚	Art no.	Art. no. for cooling jacket pipe	
				for vertical installation (B)	*for horizontal installation (D)*
TWI 6.50-02-B	DM	L	6043465	6041896	6042359
TWI 6.50-03-B	DM	L	6043466	6041892	6042355
TWI 6.50-05-B	DM	L	6043467	6041879	6042343
TWI 6.50-07-B	DM	L	6043468	6041879	6042343
TWI 6.50-07-B-SD	SD	K	6043476	6041879	6042343
TWI 6.50-10-B	DM	L	6043469	6041884	6042348
TWI 6.50-10-B-SD	SD	K	6043477	6041884	6042348
TWI 6.50-12-B	DM	L	6043470	6041887	6042350
TWI 6.50-12-B-SD	SD	K	6043478	6041887	6042350
TWI 6.50-15-B	DM	A	6043471	6041887	6042350
TWI 6.50-15-B-SD	SD	A	6043479	6041887	6042350
TWI 6.50-15-B-SD-R	SD-R	A	6047787	6041905	6042366
TWI 6.50-17-B	DM	A	6043472	6041876	6042340
TWI 6.50-17-B-SD	SD	A	6043480	6041876	6042340
TWI 6.50-17-B-SD-R	SD-R	A	6047788	6041903	6042364
TWI 6.50-19-B	DM	A	6043473	6041876	6042340
TWI 6.50-19-B-SD	SD	A	6043481	6041876	6042340
TWI 6.50-19-B-SD-R	SD-R	A	6047789	6041903	6042364
TWI 6.50-22-B	DM	A	6043474	6041878	6042342
TWI 6.50-22-B-SD	SD	A	6043482	6041878	6042342
TWI 6.50-22-B-SD-R	SD-R	A	6047790	6041901	6042362
TWI 6.50-24-B	DM	A	6043475	6041878	6042342
TWI 6.50-24-B-SD	SD	A	6043483	6041878	6042342
TWI 6.50-24-B-SD-R	SD-R	A	6047791	6041901	6042362

Motor efficiency based on 400 V, 50 Hz

Wilo-Sub TWI 6.60..-B

Pump curves Wilo-Sub TWI 6.60..-B

Minimum Efficiency Index (MEI): ≥ 0.4

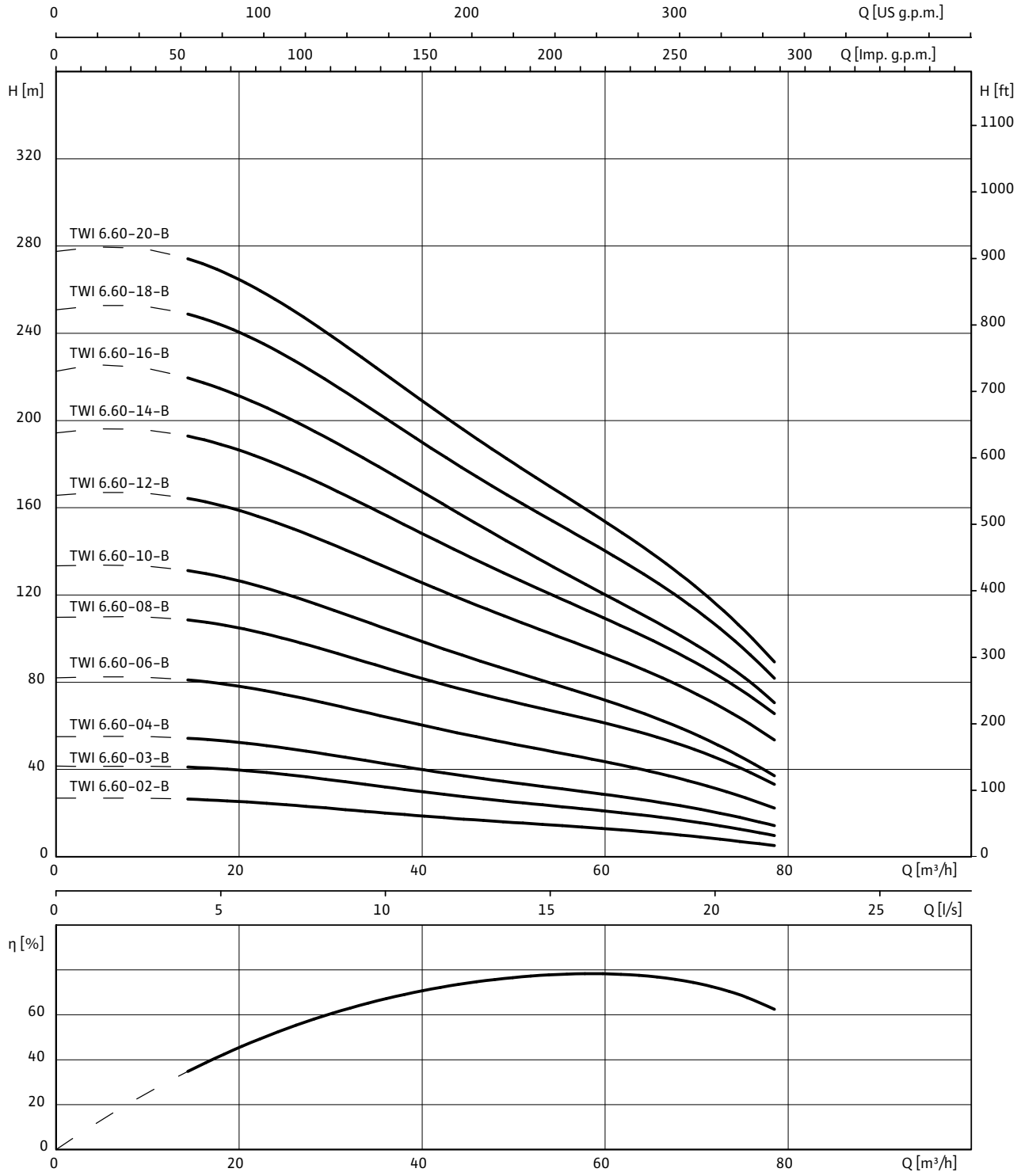

3~400 V, 50 Hz, p = 1 kg/dm^3, v = 1x10^{-6} m^2/s, ISO 9906 Annex A, η = pump efficiency

Wilo-Sub TWI 6.60..-B

Motor data

Wilo-Sub...	Type of motor	Motor diameter	Mains connection	Nominal motor power	Nominal current	Length of connecting cable	Cable cross-section
		Ø		P_2	I_N		
		"		kW	A	m	mm^2
TWI 6.60-02-B	DM	4	3~400 V, 50 Hz	3.7	9.1	5	4G1.5
TWI 6.60-03-B	DM	4	3~400 V, 50 Hz	5.5	13.7	5	4G1.5
TWI 6.60-04-B	DM	6	3~400 V, 50 Hz	7.5	16	4	4G4
TWI 6.60-06-B	DM	6	3~400 V, 50 Hz	11	23.3	4	4G4
TWI 6.60-06-B-SD	SD	6	3~400 V, 50 Hz	11	23.3	4	2x 4G4
TWI 6.60-08-B	DM	6	3~400 V, 50 Hz	15	31.3	4	4G4
TWI 6.60-08-B-SD	SD	6	3~400 V, 50 Hz	15	31.3	4	2x 4G4
TWI 6.60-10-B	DM	6	3~400 V, 50 Hz	18.5	38.5	4	4G4
TWI 6.60-10-B-SD	SD	6	3~400 V, 50 Hz	18.5	38.5	4	2x 4G4
TWI 6.60-12-B	DM	6	3~400 V, 50 Hz	22	45.3	4	4G4
TWI 6.60-12-B-SD	SD	6	3~400 V, 50 Hz	22	45.3	4	2x 4G4
TWI 6.60-14-B	DM	6	3~400 V, 50 Hz	30	63.5	4	4G4
TWI 6.60-14-B-SD	SD	6	3~400 V, 50 Hz	30	63.5	4	2x 4G4
TWI 6.60-14-B-SD-R	SD-R	6	3~400 V, 50 Hz	26	57	10	2x 4G4
TWI 6.60-16-B	DM	6	3~400 V, 50 Hz	30	63.5	4	4G4
TWI 6.60-16-B-SD	SD	6	3~400 V, 50 Hz	30	63.5	4	2x 4G4
TWI 6.60-16-B-SD-R	SD-R	6	3~400 V, 50 Hz	30	63	10	2x 4G4
TWI 6.60-18-B	DM	6	3~400 V, 50 Hz	30	63.5	4	4G4
TWI 6.60-18-B-SD	SD	6	3~400 V, 50 Hz	30	63.5	4	2x 4G4
TWI 6.60-18-B-SD-R	SD-R	6	3~400 V, 50 Hz	30	63	10	2x 4G4
TWI 6.60-20-B	DM	6	3~400 V, 50 Hz	37	73	4	4G4
TWI 6.60-20-B-SD	SD	6	3~400 V, 50 Hz	37	73	4	2x 4G4
TWI 6.60-20-B-SD-R	SD-R	6	3~400 V, 50 Hz	34	71	10	2x 4G6

Flange dimensions

Wilo-Sub...	Connection			Pressure class			Dimensions		
	DN1	*DN2*	*DN3*	PN_1	PN_2	PN_3	*D2*	*K*	*D*
	mm			bar			mm		
TWI 6.60...	Rp 3	–	–	10-40	–	–	–	–	–
TWI 6.60...	–	DN 80	DN 80	–	10-40	10	8x18	160	200
TWI 6.60...	–	–	DN 100	–	–	10	8x18	180	220

[1] On request, [3] For power cable in accordance with I_N, max. ø for threaded connection, [7] Weight of pressure shroud

Raw water intake

Single pumps

Wilo-Sub TWI 6.60..-B

Dimension drawing Wilo-Sub TWI 6.60

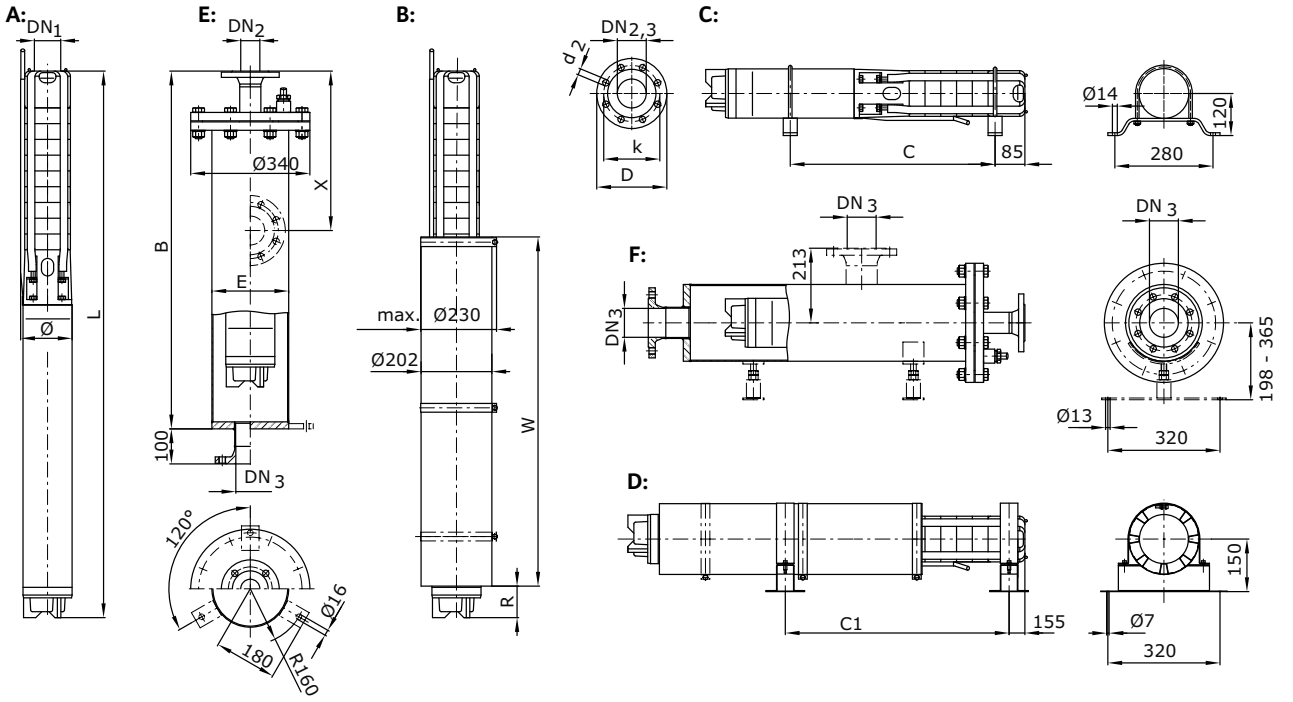

A = vertical, B = vertical with cooling jacket, C = horizontal, D = horizontal with cooling jacket, E = vertical with pressure shroud, F = horizontal with pressure shroud

Dimensions, weights

Wilo-Sub...	Type of motor	Dimensions								Weight	Weight of unit	Installation
		B	*C*	*C1*	*E*	*L*	*R*	*W*	*ø* [3]	*Jacket*[7]	*m*	
		mm								kg		
TWI 6.60-02-B	DM	1350	690	643	219.1	1031	107	650	148	64	31.9	A, B, C, D, E, F
TWI 6.60-03-B	DM	1650	830	831	219.1	1296	92	815	152	69	41.4	A, B, C, D, E, F
TWI 6.60-04-B	DM	1650	960	915	219.1	1368	52	815	152	69	59	A, B, C, D, E, F
TWI 6.60-06-B	DM	1950	1220	1174	219.1	1659	117	815	152	74	69	A, B, C, D, E, F
TWI 6.60-06-B-SD	SD	1950	1220	1174	219.1	1659	117	815	152	74	69	A, B, C, D, E, F
TWI 6.60-08-B	DM	2250	1480	1432	219.1	1950	72	925	152	79	80	A, B, C, D, E, F
TWI 6.60-08-B-SD	SD	2250	1480	1432	219.1	1950	72	925	152	79	80	A, B, C, D, E, F
TWI 6.60-10-B	DM	2550	1740	1691	219.1	2242	63	1000	152	83	91	A, B, C, D, E, F
TWI 6.60-10-B-SD	SD	2550	1740	1691	219.1	2242	63	1000	152	83	91	A, B, C, D, E, F
TWI 6.60-12-B	DM	2850	1990	1950	219.1	2533	127	1000	152	88	101	A, B, C, D, E, F
TWI 6.60-12-B-SD	SD	2850	1990	1950	219.1	2533	127	1000	152	88	101	A, B, C, D, E, F
TWI 6.60-14-B	DM	1)	1)	2050	1)	2889	158	1100	152	1)	120	A, B, C, D, E, F
TWI 6.60-14-B-SD	SD	1)	1)	2050	1)	2889	158	1100	152	1)	120	A, B, C, D, E, F
TWI 6.60-14-B-SD-R	SD-R	1)	1)	2215	1)	3001	97	1265	152	1)	126	A, B, C, D, E, F

[1] On request, [3] For power cable in accordance with I_N, max. ø for threaded connection, [7] Weight of pressure shroud

Wilo-Sub TWI 6.60..-B

Dimensions, weights

Wilo-Sub...	Type of motor	Dimensions								Weight	Weight of unit	Installation
		B	*C*	*C1*	*E*	*L*	*R*	*W*	*ø* [3]	*Jacket* [7]	*m*	
		mm								kg		
TWI 6.60-16-B	DM	[1]	[1]	2276	[1]	3115	158	1100	152	[1]	125	A, B, C, D, E, F
TWI 6.60-16-B-SD	SD	[1]	[1]	2276	[1]	3115	158	1100	152	[1]	125	A, B, C, D, E, F
TWI 6.60-16-B-SD-R	SD-R	[1]	[1]	2441	[1]	3337	207	1265	152	[1]	138	A, B, C, D, E, F
TWI 6.60-18-B	DM	[1]	[1]	2502	[1]	3341	158	1100	152	[1]	130	A, B, C, D, E, F
TWI 6.60-18-B-SD	SD	[1]	[1]	2502	[1]	3341	158	1100	152	[1]	130	A, B, C, D, E, F
TWI 6.60-18-B-SD-R	SD-R	[1]	[1]	2667	[1]	3563	207	1265	152	[1]	143	A, B, C, D, E, F
TWI 6.60-20-B	DM	[1]	[1]	3003	[1]	3935	103	1540	152	[1]	185	A, B, C, D, E, F
TWI 6.60-20-B-SD	SD	[1]	[1]	3003	[1]	3935	103	1540	152	[1]	185	A, B, C, D, E, F
TWI 6.60-20-B-SD-R	SD-R	[1]	[1]	2893	[1]	3839	92	1430	152	[1]	151	A, B, C, D, E, F

[1] On request, [3] For power cable in accordance with I_N, max. ø for threaded connection, [7] Weight of pressure shroud

Information for order placements

Wilo-Sub...	Type of motor	🚚	Art no.	Art. no. for cooling jacket pipe	
				for vertical installation (B)	*for horizontal installation (D)*
TWI 6.60-02-B	DM	L	6044818	6041896	6042359
TWI 6.60-03-B	DM	L	6043504	6041892	6042355
TWI 6.60-04-B	DM	L	6043505	6041879	6042343
TWI 06.60-04-NB	NU 611-2/7	A	–	6042322	6042372
TWI 6.60-06-B	DM	L	6043506	6041879	6042343
TWI 6.60-06-B-SD	SD	K	6043514	6041879	6042343
TWI 06.60-06-NB	NU 611-2/11	A	–	6042316	6042368
TWI 6.60-08-B	DM	L	6043507	6041884	6042348
TWI 6.60-08-B-SD	SD	K	6043515	6041884	6042348
TWI 06.60-08-NB	NU 611-2/15	A	–	6041905	6042366
TWI 6.60-10-B	DM	K	6043508	6041887	6042350
TWI 6.60-10-B-SD	SD	K	6043516	6041887	6042350
TWI 06.60-10-NB	NU 611-2/18	A	–	6041905	6042366
TWI 6.60-12-B	DM	L	6043509	6041887	6042350
TWI 6.60-12-B-SD	SD	K	6043517	6041887	6042350
TWI 06.60-12-NB	NU 611-2/22	A	–	6041905	6042366
TWI 6.60-14-B	DM	A	6043510	6041876	6042340
TWI 6.60-14-B-SD	SD	A	6043518	6041876	6042340
TWI 6.60-14-B-SD-R	SD-R	A	6047792	6041903	6042364
TWI 6.60-16-B	DM	A	6043511	6041876	6042340
TWI 6.60-16-B-SD	SD	A	6043519	6041876	6042340
TWI 6.60-16-B-SD-R	SD-R	A	6047793	6041903	6042364
TWI 6.60-18-B	DM	A	6043512	6041876	6042340
TWI 6.60-18-B-SD	SD	A	6043520	6041876	6042340
TWI 6.60-18-B-SD-R	SD-R	A	6047794	6041903	6042364
TWI 6.60-20-B	DM	A	6043513	6041878	6042342
TWI 6.60-20-B-SD	SD	A	6043521	6041878	6042342
TWI 6.60-20-B-SD-R	SD-R	A	6047795	6041901	6042362

🚚= ready for delivery, L = stock article, C = order-specific production approx. 2 weeks, K = order-specific production approx. 4 weeks, A = delivery time on request

Raw water intake

Single pumps

Series description Wilo-Sub TWI 8-..-B

Design
Submersible pump, multistage

Type key

Type key, standard version

Example:	**Wilo-Sub TWI 8.80-02-B-SD-R**
TWI	Submersible pump
8	Diameter of the hydraulic unit in inches ["]
80	Rated volume flow [m^3/h]
02	Number of hydraulic stages
B	Series generation
SD	Starting mode Without = direct starting SD = star-delta starting
R	Motor rewindable, without = motor hermetically cast

Type key, configurable version

Example:	**Wilo-Sub TWI 08.90-19-NB + NU 811-2/90**
Hydraulics:	**TWI 08.90-19-NB**
TWI	Hydraulics
0	Configurable series
8	Diameter of the hydraulic unit in inches ["]
90	Rated volume flow [m^3/h]
19	Number of hydraulic stages
N	Impeller diameter N = standard S = trimmed
B	Series generation
Motor:	**NU 811-2/90**
NU	Submersible motor
811	Size (5..., 6... = 6"; 7..., 8... = 8")
2	Number of poles
90	Package length

Application
- For water and potable water supply from boreholes and rainwater storage
- Process water supply
- For municipal water supply, sprinkling and irrigation
- Pressure boosting
- Lowering the water level
- For pumping water in industrial applications
- For pumping water without long-fibre and abrasive constituents

Special features/product advantages
- Easy maintenance due to rapid installation and dismantling
- Integrated non-return valve
- Vertical and horizontal (stage-dependent) installation possible
- Standard and configurable versions available
- Star/delta starting
- Cast and rewindable motors

Technical data
- Mains connection: 3~400 V, 50 Hz
- Submerged operating mode: S1
- Fluid temperature:
  - Hermetically cast motors: 3-20 °C or 3-30 °C (depending on type)
  - Rewindable motors (SD-R): 3-30 °C (depending on type)
- Minimum motor flow: 0.1-0.5 m/s (depending on type)
- Max. sand content: 50 g/m^3
- Max. number of starts: 10-20/h (depending on type)
- Max. immersion depth: 100 - 350 m (depending on type)
- Protection class: IP 68
- Pressure port: Rp 5

Equipment/function
- Multistage submersible-motor pump with semi-axial impellers
- Integrated non-return valve
- NEMA coupling
- Three-phase motor
- Hermetically cast motors
- Rewindable motors

Materials
Standard version:
- Hydraulic housing: Stainless steel 1.4301
- Impellers: Stainless steel 1.4301
- Hydraulics shaft: Stainless steel 1.4057
- Motor housing: EN-GJL or stainless steel 1.4301
- Motor shaft: Stainless steel 1.4021, 1.4301 or 1.4305

Series description Wilo-Sub TWI 8-..-B

Special version:
- Hydraulic housing: Stainless steel 1.4401
- Impellers: Stainless steel 1.4571
- Hydraulics shaft: Stainless steel 1.4401
- Motor housing: G-CuSn10, stainless steel 1.4401, 1.4571 (depending on type)
- Motor shaft: Stainless steel 1.4542. 1.4462 (depending on type)

Description/design
Submersible-motor pump for vertical or horizontal installation.

Hydraulics
Multistage submersible-motor pump with 6" or 8" NEMA connection and semi-axial impellers with sectional construction. Integrated non-return valve. All parts in contact with the fluid are made of corrosion-free materials.

Motor
Three-phase motor for direct or star-delta starting Sealed, hermetically cast motor, resin-impregnated, with enamel-insulated winding or rewindable motor with PVC-insulated winding, self-lubricating bearing, with water-glycol filling. NU 611, NU 8...-series motors can also be filled with potable water (T version).

Cooling
The motor is cooled by the fluid. The motor must always be operated in submerged state. The limit values for the max. fluid temperature and the minimum flow rate must not be exceeded. Vertical installation is possible optionally with or without cooling jacket. Cooling jacket is required for horizontal installation.

Pressure shroud
The pressure shroud is used for direct installation of the unit in the pipe system. Standard models are without mounted non-return valves. The maximum inlet pressure is 10 bar.

Options
- Hydraulics in 1.4401 stainless steel
- Motor in stainless steel 1.4401, 1.4571 or G-CuSn10
- 60 Hz version
- Star/delta starting
- Rewindable motor
- Rewindable motor with potable water filling
- Configured units for special versions

Scope of delivery
- Hydraulics + motor fully assembled
- 4/8/10 m connecting cable approved for potable water with standard version models (cross-section: 4x2.5 mm^2 or 4x4 mm^2 or single conductor)
- Cable cross-section and length per customer request for configured material
- Installation and operating instructions

Accessories
- Cooling jacket pipes
- Pressure shroud
- Cable kits for potable water and process water
- Switchgears

Note
The units shown here are standard versions that are available directly from stock or deliverable within 2-4 weeks. For more details about delivery times, please see the LB column:
- L = in-stock items; available from stock in specified standard configuration
- K = component production from stock; job-specific production, delivery within approx. 4 weeks in specified standard configuration
- A = delivery time on request; configured product per customer request

Configuration
- No suction mode is possible with these units!
- The unit must be fully immersed in water during operation.

Series description Wilo-Sub TWI 8-..-B

Pump curves

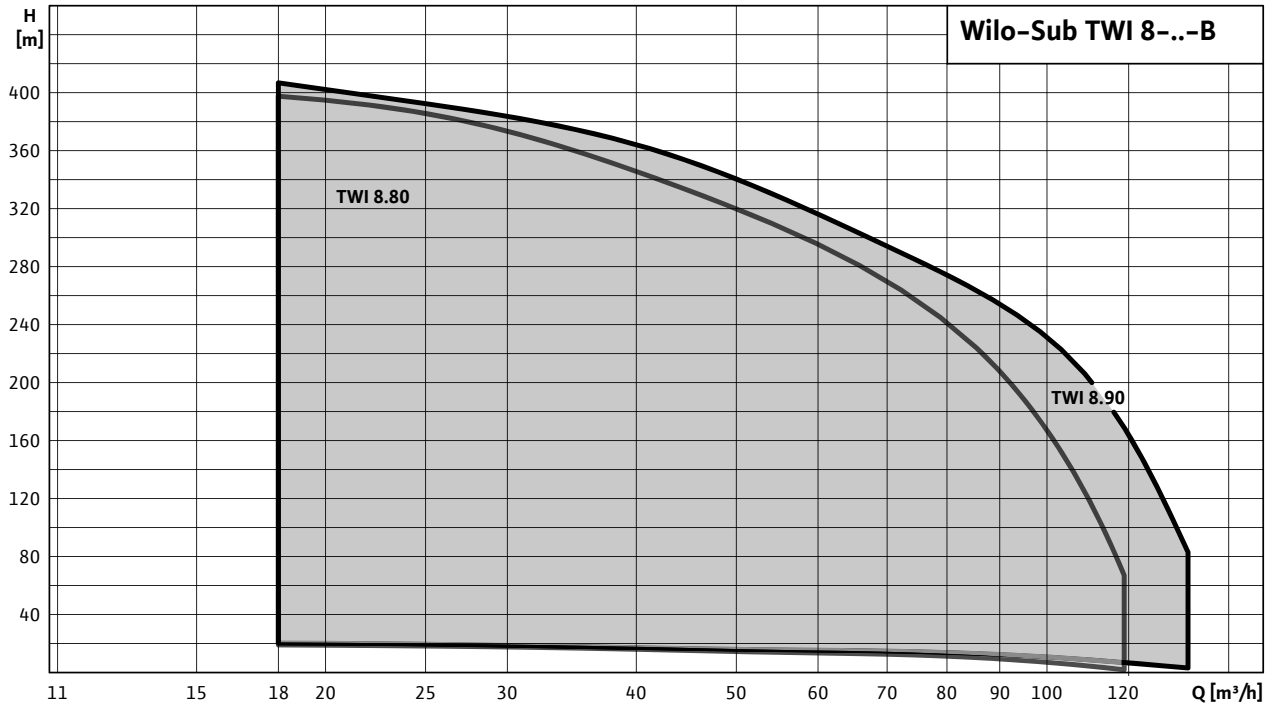

Technical data Wilo-Sub TWI 8-..-B

Wilo-Sub...	Type of motor	Max. volume flow	Max. delivery head	Min. flow rate at the motor	Insulation class	Max. immersion depth
		Q_{max}	H_{max}	v		
		m^3/h	m	m/s		m
TWI 8.80-01-B	DM	100	21.5	0.16	F	350
TWI 8.80-01-B-SD-R	SD-R	100	21.5	0.1	80°C	100
TWI 8.80-02-B-SD	SD	100	40	0.16	F	350
TWI 8.80-02-B-SD-R	SD-R	100	40	0.1	80°C	100
TWI 8.80-03-B-SD	SD	100	60	0.16	F	350
TWI 8.80-03-B-SD-R	SD-R	100	60	0.1	80°C	100
TWI 8.80-04-B-SD	SD	100	80	0.16	F	350
TWI 8.80-04-B-SD-R	SD-R	100	80	0.2	80°C	100
TWI 8.80-05-B-SD	SD	100	100	0.16	F	350
TWI 8.80-05-B-SD-R	SD-R	100	100	0.5	80°C	100
TWI 8.80-07-B-SD	SD	100	140	0.16	F	350
TWI 8.80-07-B-SD-R	SD-R	100	140	0.5	80°C	100
TWI 8.80-08-B-SD	SD	100	160	0.16	F	350
TWI 8.80-08-B-SD-R	SD-R	100	160	0.5	80°C	100
TWI 8.80-09-B-SD	SD	100	175	0.16	F	350
TWI 8.80-09-B-SD-R	SD-R	100	175	0.5	80°C	100
TWI 8.80-10-B-SD	SD	100	195	0.16	F	350
TWI 8.80-10-B-SD-R	SD-R	100	195	0.5	80°C	100
TWI 8.80-11-B-SD	SD	100	220	0.16	F	350
TWI 8.80-15-B-SD	SD	100	310	0.16	F	300
TWI 8.80-16-B-SD	SD	100	330	0.16	F	300
TWI 8.80-18-B-SD	SD	100	380	0.16	F	300
TWI 8.80-20-B-SD	SD	100	420	0.16	F	300
TWI 8.90-01-B-SD	SD	120	22	0.16	F	350
TWI 8.90-01-B-SD-R	SD-R	120	22	0.1	80°C	100
TWI 8.90-02-B-SD	SD	120	42	0.16	F	350
TWI 8.90-02-B-SD-R	SD-R	120	42	0.1	80°C	100
TWI 8.90-03-B-SD	SD	120	64	0.16	F	350
TWI 8.90-03-B-SD-R	SD-R	120	64	0.2	80°C	100
TWI 8.90-04-B-SD	SD	120	83	0.16	F	350
TWI 8.90-04-B-SD-R	SD-R	120	83	0.5	80°C	100
TWI 8.90-05-B-SD	SD	120	105	0.16	F	350
TWI 8.90-05-B-SD-R	SD-R	120	105	0.5	80°C	100
TWI 8.90-06-B-SD	SD	120	127	0.16	F	350
TWI 8.90-06-B-SD-R	SD-R	120	127	0.5	80°C	100
TWI 8.90-07-B-SD	SD	120	145	0.16	F	350
TWI 8.90-07-B-SD-R	SD-R	120	145	0.5	80°C	100
TWI 8.90-08-B-SD	SD	120	168	0.16	F	350
TWI 8.90-08-B-SD-R	SD-R	120	168	0.5	80°C	100
TWI 8.90-09-B-SD	SD	120	192	0.16	F	350
TWI 8.90-10-B-SD	SD	120	218	0.16	F	300
TWI 8.90-11-B-SD	SD	120	240	0.16	F	300
TWI 8.90-12-B-SD	SD	120	265	0.16	F	300
TWI 8.90-13-B-SD	SD	120	288	0.16	F	300
TWI 8.90-14-B-SD	SD	120	310	0.16	F	300
TWI 8.90-15-B-SD	SD	120	335	0.16	F	300

Technical data Wilo-Sub TWI 8-..-B

Wilo-Sub...	Type of motor	Max. volume flow	Max. delivery head	Min. flow rate at the motor	Insulation class	Max. immersion depth
		Q_{max}	H_{max}	v		
		m^3/h	m	m/s		m
TWI 8.90-17-B-SD	SD	120	375	0.16	F	300
TWI 8.90-18-B-SD	SD	120	390	0.16	F	300
TWI 8.90-20-B-SD	SD	120	420	0.16	F	300

Voltage tolerance +/- 10 % (specifications according to DIN EN 60034)

Materials

Wilo-Sub...	Impeller	Pump housing	Pump shaft	Motor housing	Motor housing (special version)	Motor shaft	Motor shaft (special version)
TWI 8.80-01-B	1.4301	1.4301	1.4057	EN-GJL	1.4401	1.4305	1.4542
TWI 8.80-01-B-SD-R	1.4301	1.4301	1.4057	1.4301	1.4571	1.4301	1.4462
TWI 8.80-02-B-SD	1.4301	1.4301	1.4057	EN-GJL	1.4401	1.4305	1.4542
TWI 8.80-02-B-SD-R	1.4301	1.4301	1.4057	1.4301	1.4571	1.4301	1.4462
TWI 8.80-03-B-SD	1.4301	1.4301	1.4057	EN-GJL	1.4401	1.4305	1.4542
TWI 8.80-03-B-SD-R	1.4301	1.4301	1.4057	1.4301	1.4571	1.4301	1.4462
TWI 8.80-04-B-SD	1.4301	1.4301	1.4057	EN-GJL	1.4401	1.4305	1.4542
TWI 8.80-04-B-SD-R	1.4301	1.4301	1.4057	1.4301	1.4571	1.4301	1.4462
TWI 8.80-05-B-SD	1.4301	1.4301	1.4057	EN-GJL	1.4401	1.4305	1.4542
TWI 8.80-05-B-SD-R	1.4301	1.4301	1.4057	1.4301	1.4571	1.4301	1.4462
TWI 8.80-07-B-SD	1.4301	1.4301	1.4057	EN-GJL	1.4401	1.4305	1.4542
TWI 8.80-07-B-SD-R	1.4301	1.4301	1.4057	1.4301	1.4571	1.4301	1.4462
TWI 8.80-08-B-SD	1.4301	1.4301	1.4057	EN-GJL	1.4401	1.4305	1.4542
TWI 8.80-08-B-SD-R	1.4301	1.4301	1.4057	1.4301	1.4571	1.4301	1.4462
TWI 8.80-09-B-SD	1.4301	1.4301	1.4057	EN-GJL	1.4401	1.4305	1.4542
TWI 8.80-09-B-SD-R	1.4301	1.4301	1.4057	1.4301	1.4571	1.4301	1.4462
TWI 8.80-10-B-SD	1.4301	1.4301	1.4057	EN-GJL	1.4401	1.4305	1.4542
TWI 8.80-10-B-SD-R	1.4301	1.4301	1.4057	1.4301	1.4401	1.4301	1.4462
TWI 8.80-11-B-SD	1.4301	1.4301	1.4057	EN-GJL	1.4401	1.4305	1.4542
TWI 8.80-12-B-SD	1.4301	1.4301	1.4057	EN-GJL	1.4401	1.4305	1.4542
TWI 8.80-15-B-SD	1.4301	1.4301	1.4057	EN-GJL	1.4401	1.4305	1.4542
TWI 8.80-16-B-SD	1.4301	1.4301	1.4057	EN-GJL	1.4401	1.4305	1.4542
TWI 8.80-18-B-SD	1.4301	1.4301	1.4057	EN-GJL	1.4401	1.4305	1.4542
TWI 8.80-20-B-SD	1.4301	1.4301	1.4057	EN-GJL	1.4401	1.4305	1.4542
TWI 8.90-01-B-SD	1.4301	1.4301	1.4057	EN-GJL	1.4401	1.4305	1.4542
TWI 8.90-01-B-SD-R	1.4301	1.4301	1.4057	1.4301	1.4571	1.4301	1.4462
TWI 8.90-02-B-SD	1.4301	1.4301	1.4057	EN-GJL	1.4401	1.4305	1.4542
TWI 8.90-02-B-SD-R	1.4301	1.4301	1.4057	1.4301	1.4571	1.4301	1.4462
TWI 8.90-03-B-SD	1.4301	1.4301	1.4057	EN-GJL	1.4401	1.4305	1.4542
TWI 8.90-03-B-SD-R	1.4301	1.4301	1.4057	1.4301	1.4571	1.4301	1.4462
TWI 8.90-04-B-SD	1.4301	1.4301	1.4057	EN-GJL	1.4401	1.4305	1.4542
TWI 8.90-04-B-SD-R	1.4301	1.4301	1.4057	1.4301	1.4571	1.4301	1.4462
TWI 8.90-05-B-SD	1.4301	1.4301	1.4057	EN-GJL	1.4401	1.4305	1.4542
TWI 8.90-05-B-SD-R	1.4301	1.4301	1.4057	1.4301	1.4571	1.4301	1.4462
TWI 8.90-06-B-SD	1.4301	1.4301	1.4057	EN-GJL	1.4401	1.4305	1.4542
TWI 8.90-06-B-SD-R	1.4301	1.4301	1.4057	1.4301	1.4571	1.4301	1.4462
TWI 8.90-07-B-SD	1.4301	1.4301	1.4057	EN-GJL	1.4401	1.4305	1.4542
TWI 8.90-07-B-SD-R	1.4301	1.4301	1.4057	1.4301	1.4571	1.4301	1.4462
TWI 8.90-08-B-SD	1.4301	1.4301	1.4057	EN-GJL	1.4401	1.4305	1.4542
TWI 8.90-08-B-SD-R	1.4301	1.4301	1.4057	1.4301	1.4571	1.4301	1.4462
TWI 8.90-09-B-SD	1.4301	1.4301	1.4057	EN-GJL	1.4401	1.4305	1.4542
TWI 8.90-10-B-SD	1.4301	1.4301	1.4057	EN-GJL	1.4401	1.4305	1.4542
TWI 8.90-11-B-SD	1.4301	1.4301	1.4057	EN-GJL	1.4401	1.4305	1.4542
TWI 8.90-12-B-SD	1.4301	1.4301	1.4057	EN-GJL	1.4401	1.4305	1.4542
TWI 8.90-13-B-SD	1.4301	1.4301	1.4057	EN-GJL	1.4401	1.4305	1.4542
TWI 8.90-14-B-SD	1.4301	1.4301	1.4057	EN-GJL	1.4401	1.4305	1.4542
TWI 8.90-15-B-SD	1.4301	1.4301	1.4057	EN-GJL	1.4401	1.4305	1.4542

Raw water intake

Single pumps

Materials

Wilo-Sub...	Impeller	Pump housing	Pump shaft	Motor housing	Motor housing (special version)	Motor shaft	Motor shaft (special version)
TWI 8.90-17-B-SD	1.4301	1.4301	1.4057	EN-GJL	1.4401	1.4305	1.4542
TWI 8.90-18-B-SD	1.4301	1.4301	1.4057	EN-GJL	1.4401	1.4305	1.4542
TWI 8.90-20-B-SD	1.4301	1.4301	1.4057	EN-GJL	1.4401	1.4305	1.4542

Wilo-Sub TWI 8.80..-B

Pump curves Wilo-Sub TWI 8.80..-B

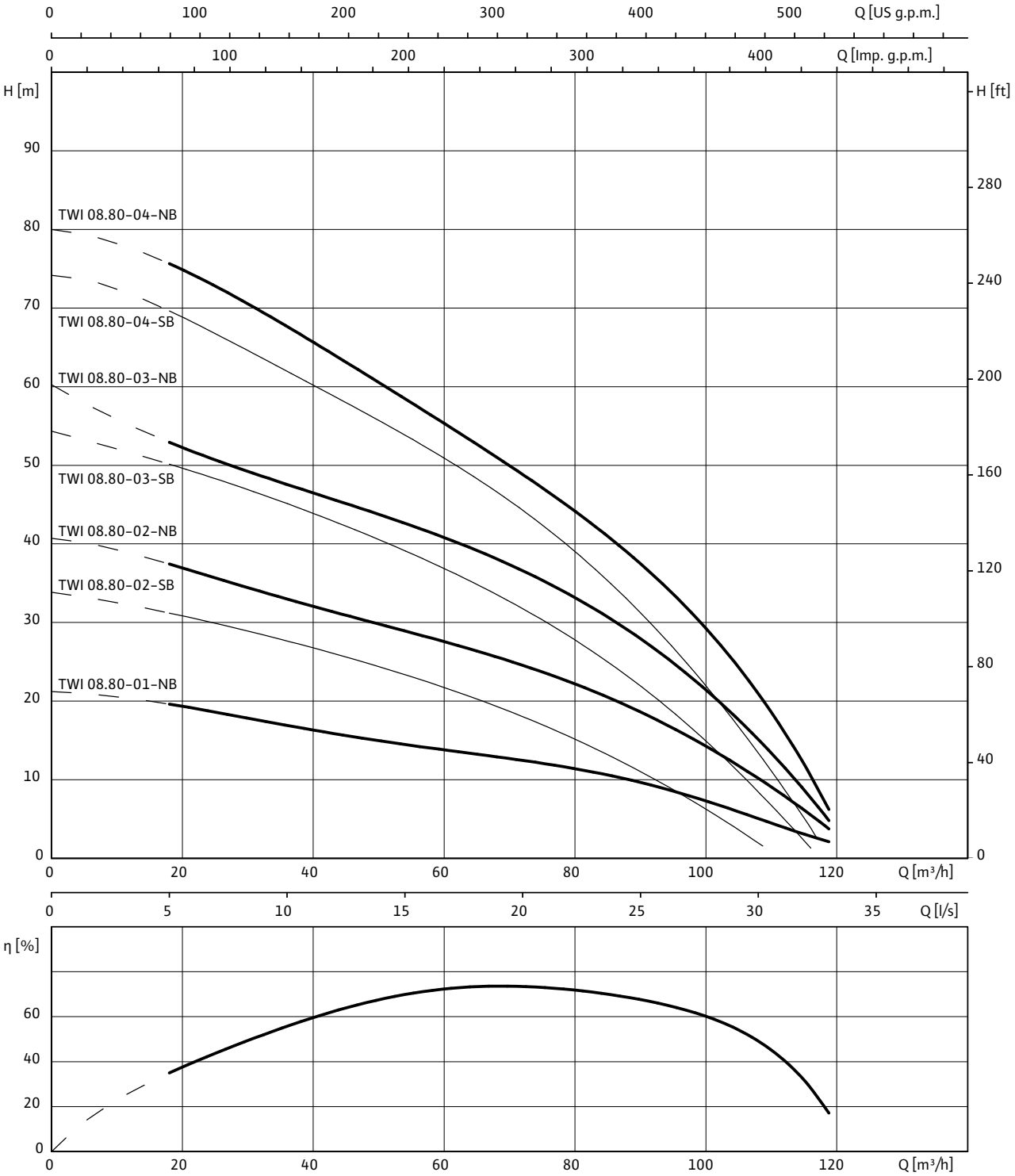

3~400 V, 50 Hz, p = 1 kg/dm^3, ν = 1x10^{-6} m^2/s, ISO 9906 Annex A, η = pump efficiency

Wilo-Sub TWI 8.80..-B

Motor data							
Wilo-Sub...	**Type of motor**	**Motor diameter**	**Mains connection**	**Nominal motor power**	**Nominal current**	**Length of connecting cable**	**Cable cross-section**
		Ø		P_2	I_N		
		"		kW	A	m	mm^2
TWI 8.80-01-B	DM	6	3~400 V, 50 Hz	4	9.1	4	4G4
TWI 8.80-01-B-SD-R	SD-R	6	3~400 V, 50 Hz	5.5	12	10	2x 4G2.5
TWI 8.80-02-B-SD	SD	6	3~400 V, 50 Hz	7.5	16	4	2x 4G4
TWI 8.80-02-B-SD-R	SD-R	6	3~400 V, 50 Hz	7.5	16.8	10	2x 4G2.5
TWI 08.80-02-SB	NU 501-2/5	6	3~400 V, 50 Hz	5.5	12.3	–	–
TWI 08.80-02-SB	NU 611-2/5	6	3~400 V, 50 Hz	5.5	12	–	–
TWI 8.80-03-B-SD	SD	6	3~400 V, 50 Hz	11	23.5	4	2x 4G4
TWI 8.80-03-B-SD-R	SD-R	6	3~400 V, 50 Hz	11	23.5	10	2x 4G2.5
TWI 08.80-03-SB	NU 501-2/9	6	3~400 V, 50 Hz	9.3	21	–	–
TWI 08.80-03-SB	NU 611-2/9	6	3~400 V, 50 Hz	9.2	20.5	–	–
TWI 8.80-04-B-SD	SD	6	3~400 V, 50 Hz	15	31.5	4	2x 4G4
TWI 8.80-04-B-SD-R	SD-R	6	3~400 V, 50 Hz	15	32	10	2x 4G2.5
TWI 08.80-04-SB	NU 501-2/15	6	3~400 V, 50 Hz	15	31.5	–	–
TWI 08.80-04-SB	NU 611-2/13	6	3~400 V, 50 Hz	13	28.5	–	–

Flange dimensions									
Wilo-Sub...	**Connection**			**Pressure class**			**Dimensions**		
	DN1	*DN2*	*DN3*	PN_1	PN_2	PN_3	*D2*	*K*	*D*
	mm			bar			mm		
TWI 8...	Rp 5	–	–	10-40	–	–	–	–	–
TWI 8...	–	DN 100	–	–	10-16	–	8x18	180	220
TWI 8...	–	DN 100	–	–	25-40	–	8x22	190	235
TWI 8...	–	DN 125	DN 125	–	10-16	10	8x18	210	250
TWI 8...	–	DN 125	–	–	25-40	–	8x26	220	270
TWI 8...	–	DN 150	DN 150	–	10-16	10	8x22	240	285
TWI 8...	–	DN 150	–	–	25-40	–	8x26	250	300

[1] On request, [3] For power cable in accordance with I_N, max. ø for threaded connection, [7] Weight of pressure shroud

Wilo-Sub TWI 8.80..-B

Dimension drawing Wilo-Sub TWI 8.80

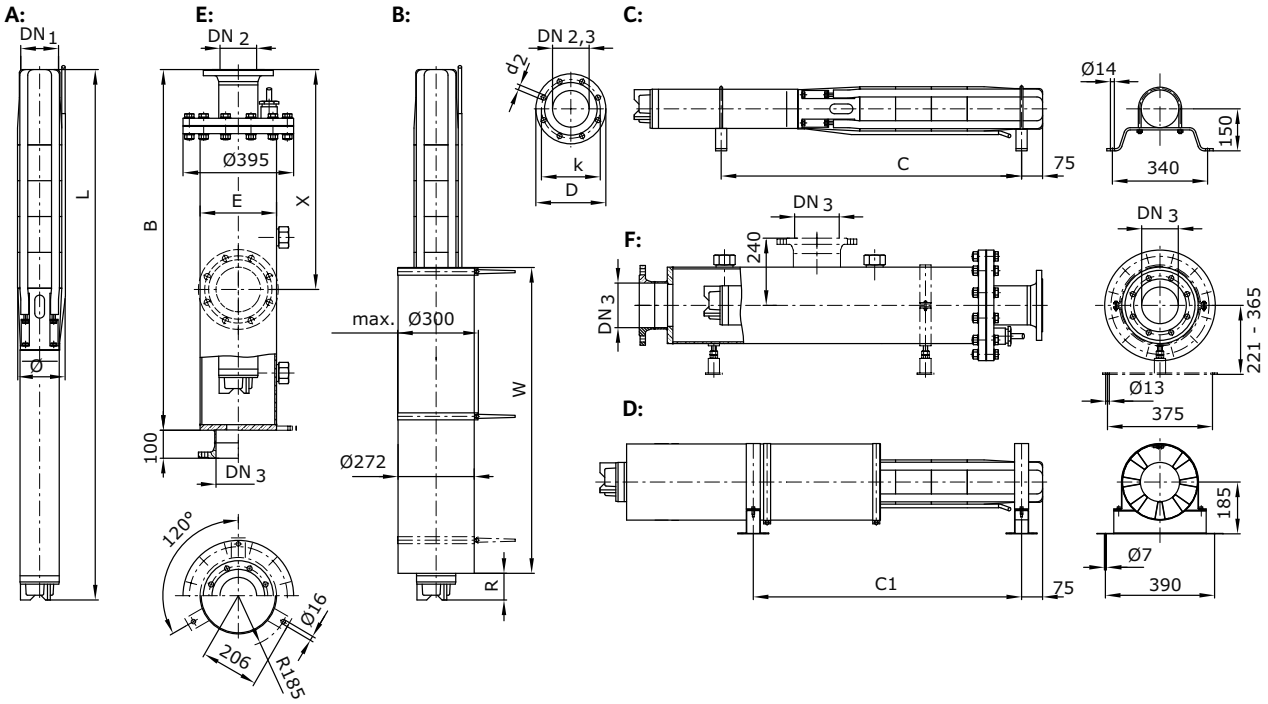

A = vertical, B = vertical with cooling jacket, C = horizontal, D = horizontal with cooling jacket, E = vertical with pressure shroud, F = horizontal with pressure shroud

Dimensions, weights

Wilo-Sub...	Type of motor	Dimensions								Weight	Weight of unit	Installation
		B	*C*	*C1*	*E*	*L*	*R*	*W*	*ø* [3]	*Jacket* [7]	*m*	
		mm								kg		
TWI 8.80-01-B	DM	1700	820	859	273	1199	116	750	186	108	63	A, B, C, D, E, F
TWI 8.80-01-B-SD-R	SD-R	1700	880	783	273	1315	120	835	186	108	69	A, B, C, D, E, F
TWI 8.80-02-B-SD	SD	2000	980	911	273	1392	96	835	186	116	74	A, B, C, D, E, F
TWI 8.80-02-B-SD-R	SD-R	2000	1020	911	273	1475	171	835	186	116	77	A, B, C, D, E, F
TWI 08.80-02-SB	NU 501-2/5	2000	970	911	273	1360	65	835	186	116	70	A, B, C, D, E, F
TWI 08.80-02-SB	NU 611-2/5	2000	1010	911	273	1443	139	835	186	116	73	A, B, C, D, E, F
TWI 8.80-03-B-SD	SD	2000	1140	1039	273	1585	161	835	186	116	83	A, B, C, D, E, F
TWI 8.80-03-B-SD-R	SD-R	2300	1220	1247	273	1728	131	1000	186	124	92	A, B, C, D, E, F
TWI 08.80-03-SB	NU 501-2/9	2000	1130	1039	273	1553	129	835	186	116	80	A, B, C, D, E, F
TWI 08.80-03-SB	NU 611-2/9	2000	1170	1205	273	1643	46	1000	186	116	84	A, B, C, D, E, F
TWI 8.80-04-B-SD	SD	2300	1310	1341	273	1779	61	1000	186	124	93	A, B, C, D, E, F
TWI 8.80-04-B-SD-R	SD-R	2300	1390	1318	273	1942	66	1150	186	124	105	A, B, C, D, E, F
TWI 08.80-04-SB	NU 501-2/15	2300	1310	1341	273	1779	61	1000	186	124	93	A, B, C, D, E, F
TWI 08.80-04-SB	NU 611-2/13	2300	1360	1394	273	1892	166	1000	186	124	100	A, B, C, D, E, F

[1] On request, [3] For power cable in accordance with I_N, max. ø for threaded connection, [7] Weight of pressure shroud

Wilo-Sub TWI 8.80..-B

Information for order placements					
Wilo-Sub...	**Type of motor**	🚚	**Art no.**	**Art. no. for cooling jacket pipe**	
				for vertical installation (B)	*for horizontal installation (D)*
TWI 8.80-01-B	DM	A	6047736	6043167	6043231
TWI 8.80-01-B-SD-R	SD-R	A	6047796	6043128	6043203
TWI 8.80-02-B-SD	SD	A	6047737	6043124	6043199
TWI 8.80-02-B-SD-R	SD-R	A	6047797	6043128	6043203
TWI 08.80-02-SB	NU 501-2/5	A	–	6043124	6043199
TWI 08.80-02-SB	NU 611-2/5	A	–	6043128	6043203
TWI 8.80-03-B-SD	SD	A	6047738	6043124	6043199
TWI 8.80-03-B-SD-R	SD-R	A	6047798	6043195	6043246
TWI 08.80-03-SB	NU 501-2/9	A	–	6043124	6043199
TWI 08.80-03-SB	NU 611-2/9	A	–	6043195	6043246
TWI 8.80-04-B-SD	SD	A	6047739	6043191	6043242
TWI 8.80-04-B-SD-R	SD-R	A	6047799	6043145	6043216
TWI 08.80-04-SB	NU 501-2/15	A	–	6043191	6043242
TWI 08.80-04-SB	NU 611-2/13	A	–	6043195	6043246

Motor efficiency based on 400 V, 50 Hz

Wilo-Sub TWI 8.80..-B

Pump curves Wilo-Sub TWI 8.80..-B

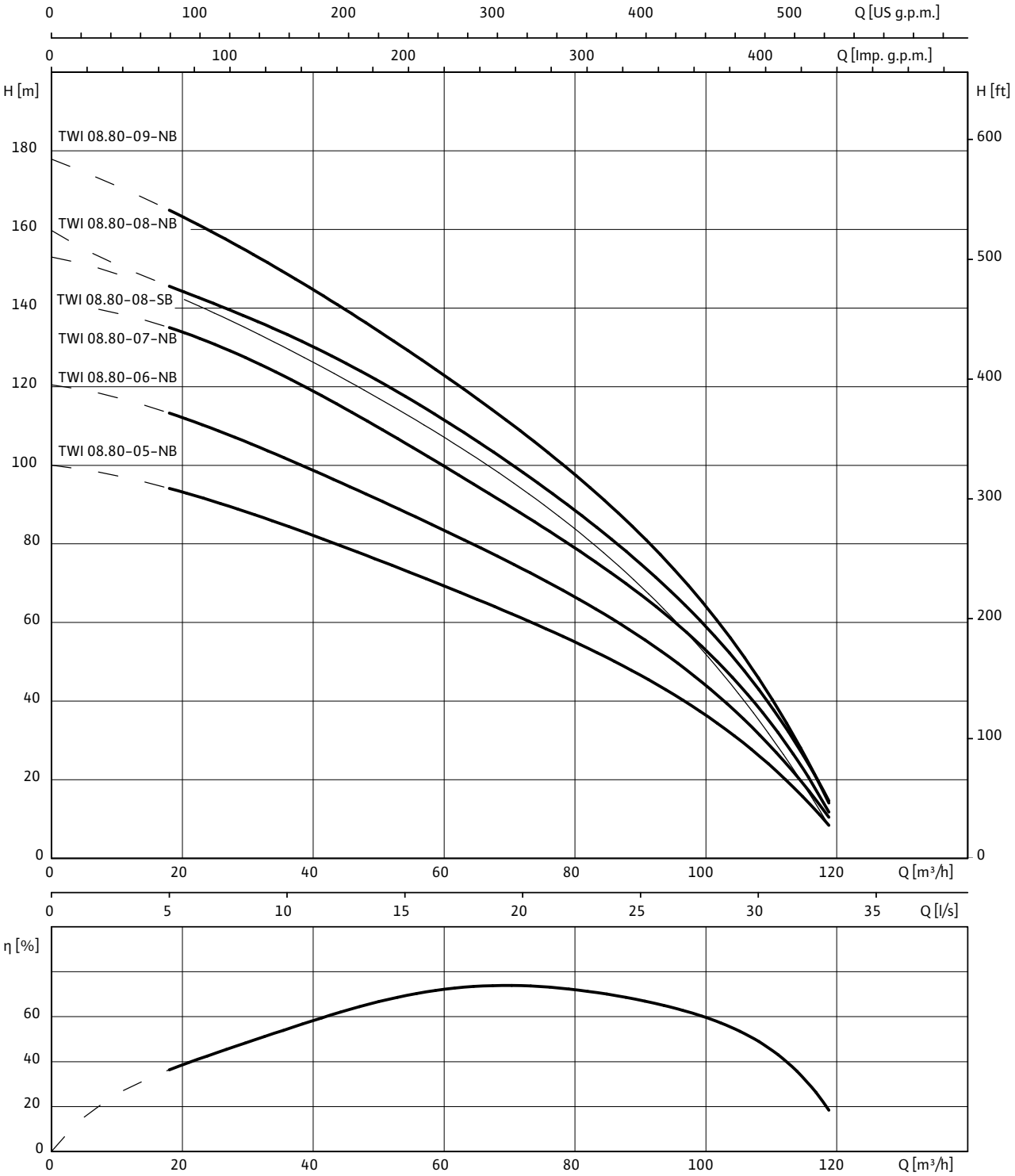

3~400 V, 50 Hz, p = 1 kg/dm^3, ν = 1x10^{-6} m^2/s, ISO 9906 Annex A, η = pump efficiency

Raw water intake

Single pumps

Wilo-Sub TWI 8.80..-B

Motor data							
Wilo-Sub...	**Type of motor**	**Motor diameter**	**Mains connection**	**Nominal motor power**	**Nominal current**	**Length of connecting cable**	**Cable cross-section**
		Ø		P_2	I_N		
		"		kW	A	m	mm^2
TWI 8.80-05-B-SD	SD	6	3~400 V, 50 Hz	18.5	38.5	4	2x 4G4
TWI 8.80-05-B-SD-R	SD-R	6	3~400 V, 50 Hz	18.5	40	10	2x 4G2.5
TWI 08.80-06-NB	NU 501-2/22	6	3~400 V, 50 Hz	22	44.5	–	–
TWI 08.80-06-NB	NU 611-2/22	6	3~400 V, 50 Hz	22	47.5	–	–
TWI 08.80-06-NB	NU 501-2/22	6	3~400 V, 50 Hz	22	44.5	–	–
TWI 08.80-06-NB	NU 611-2/22	6	3~400 V, 50 Hz	22	47.5	–	–
TWI 8.80-07-B-SD	SD	6	3~400 V, 50 Hz	30	63	4	2x 4G4
TWI 8.80-07-B-SD-R	SD-R	6	3~400 V, 50 Hz	26	57	10	2x 4G4
TWI 8.80-08-B-SD	SD	6	3~400 V, 50 Hz	30	63	4	2x 4G4
TWI 8.80-08-B-SD-R	SD-R	6	3~400 V, 50 Hz	30	63	10	2x 4G4
TWI 08.80-08-SB	NU 501-2/30	6	3~400 V, 50 Hz	30	63	–	–
TWI 08.80-08-SB	NU 611-2/30	6	3~400 V, 50 Hz	30	63	–	–
TWI 8.80-09-B-SD	SD	6	3~400 V, 50 Hz	30	63	4	2x 4G4
TWI 8.80-09-B-SD-R	SD-R	6	3~400 V, 50 Hz	30	63	10	2x 4G4

Flange dimensions									
Wilo-Sub...	**Connection**			**Pressure class**			**Dimensions**		
	DN1	*DN2*	*DN3*	PN_1	PN_2	PN_3	*D2*	*K*	*D*
	mm			bar			mm		
TWI 8...	Rp 5	–	–	10-40	–	–	–	–	–
TWI 8...	–	DN 100	–	–	10-16	–	8x18	180	220
TWI 8...	–	DN 100	–	–	25-40	–	8x22	190	235
TWI 8...	–	DN 125	DN 125	–	10-16	10	8x18	210	250
TWI 8...	–	DN 125	–	–	25-40	–	8x26	220	270
TWI 8...	–	DN 150	DN 150	–	10-16	10	8x22	240	285
TWI 8...	–	DN 150	–	–	25-40	–	8x26	250	300

[1] On request, [3] For power cable in accordance with I_N, max. ø for threaded connection, [7] Weight of pressure shroud

Wilo-Sub TWI 8.80..-B

Dimension drawing Wilo-Sub TWI 8.80

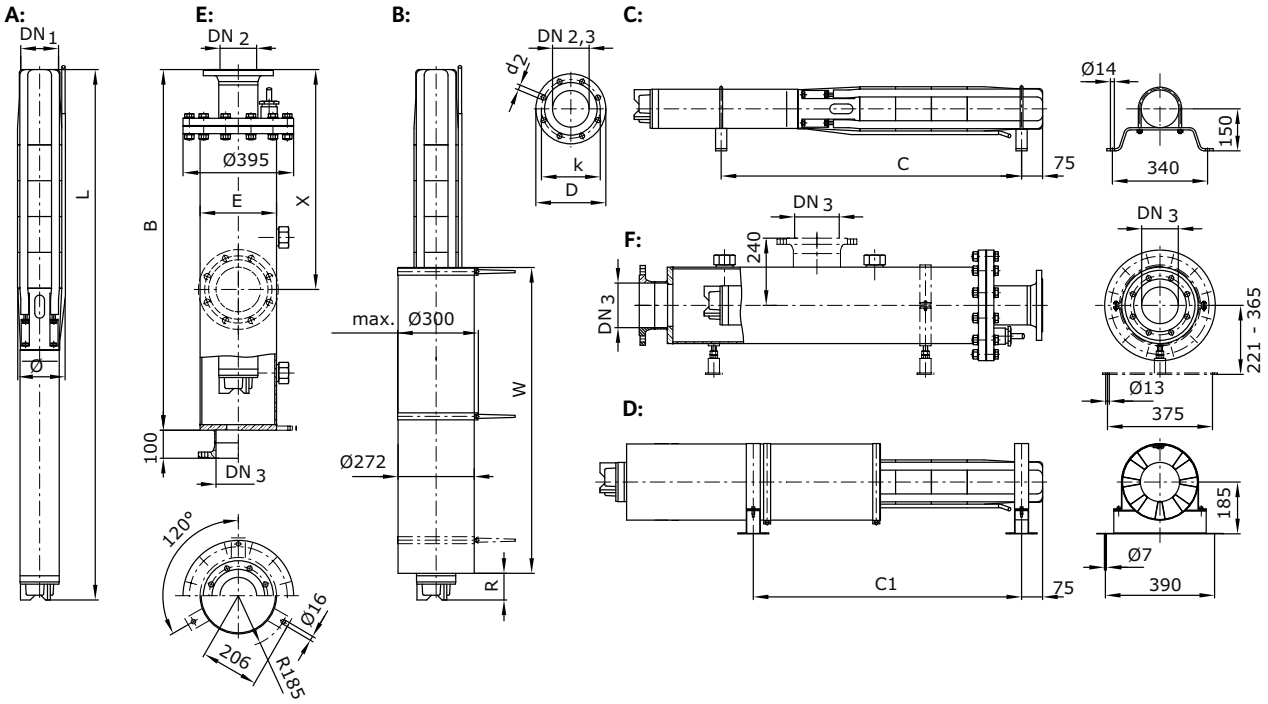

A = vertical, B = vertical with cooling jacket, C = horizontal, D = horizontal with cooling jacket, E = vertical with pressure shroud, F = horizontal with pressure shroud

Dimensions, weights

Wilo-Sub...	Type of motor	Dimensions								Weight	Weight of unit	Installation
		B	*C*	*C1*	*E*	*L*	*R*	*W*	*ø* [3]	*Jacket* [7]	*m*	
		mm								kg		
TWI 8.80-05-B-SD	SD	2600	1470	1502	273	1973	127	1000	186	132	103	A, B, C, D, E, F
TWI 8.80-05-B-SD-R	SD-R	2600	1550	1446	273	2135	131	1150	186	132	116	A, B, C, D, E, F
TWI 08.80-06-NB	NU 501-2/22	2600	1620	1663	273	2166	192	1000	186	132	112	A, B, C, D, E, F
TWI 08.80-06-NB	NU 611-2/22	2900	1710	1574	273	2338	150	1206	186	140	126	A, B, C, D, E, F
TWI 08.80-06-NB	NU 501-2/22	2600	1620	1663	273	2166	192	1000	186	132	112	A, B, C, D, E, F
TWI 08.80-06-NB	NU 611-2/22	2900	1710	1574	273	2338	150	1206	186	140	126	A, B, C, D, E, F
TWI 8.80-07-B-SD	SD	2900	1820	1702	273	2424	172	1150	186	140	131	A, B, C, D, E, F
TWI 8.80-07-B-SD-R	SD-R	2900	1870	1952	273	2536	26	1400	186	140	136	A, B, C, D, E, F
TWI 8.80-08-B-SD	SD	1)	1960	1842	1)	2552	172	1150	186	1)	134	A, B, C, D, E, F
TWI 8.80-08-B-SD-R	SD-R	1)	2070	2092	1)	2774	136	1400	186	1)	147	A, B, C, D, E, F
TWI 08.80-08-SB	NU 501-2/30	1)	1960	1842	1)	2552	172	1150	186	1)	134	A, B, C, D, E, F
TWI 08.80-08-SB	NU 611-2/30	1)	2070	2092	1)	2774	136	1400	186	1)	147	A, B, C, D, E, F
TWI 8.80-09-B-SD	SD	1)	2090	1970	1)	2681	172	1150	186	1)	138	A, B, C, D, E, F
TWI 8.80-09-B-SD-R	SD-R	1)	2200	2220	1)	2903	136	1400	186	1)	151	A, B, C, D, E, F

[1] On request, [3] For power cable in accordance with I_N, max. ø for threaded connection, [7] Weight of pressure shroud

Wilo-Sub TWI 8.80..-B

Information for order placements					
Wilo-Sub...	**Type of motor**	🚚	**Art no.**	**Art. no. for cooling jacket pipe**	
				for vertical installation (B)	*for horizontal installation (D)*
TWI 8.80-05-B-SD	SD	A	6047740	6043191	6043242
TWI 8.80-05-B-SD-R	SD-R	A	6047800	6043145	6043216
TWI 08.80-06-NB	NU 501-2/22	A	6048882	6043191	6043242
TWI 08.80-06-NB	NU 611-2/22	A	6048881	6043145	6043216
TWI 08.80-06-NB	NU 501-2/22	A	–	6043191	6043242
TWI 08.80-06-NB	NU 611-2/22	A	–	6043145	6043216
TWI 8.80-07-B-SD	SD	A	6047741	6043141	6043212
TWI 8.80-07-B-SD-R	SD-R	A	6047801	6043151	6043222
TWI 8.80-08-B-SD	SD	A	6047742	6043141	6043212
TWI 8.80-08-B-SD-R	SD-R	A	6047802	6043151	6043222
TWI 08.80-08-SB	NU 501-2/30	A	–	6043141	6043212
TWI 08.80-08-SB	NU 611-2/30	A	–	6043151	6043222
TWI 8.80-09-B-SD	SD	A	6047743	6043141	6043212
TWI 8.80-09-B-SD-R	SD-R	A	6047803	6043151	6043222

Motor efficiency based on 400 V, 50 Hz

Wilo-Sub TWI 8.80..-B

Pump curves Wilo-Sub TWI 8.80..-B

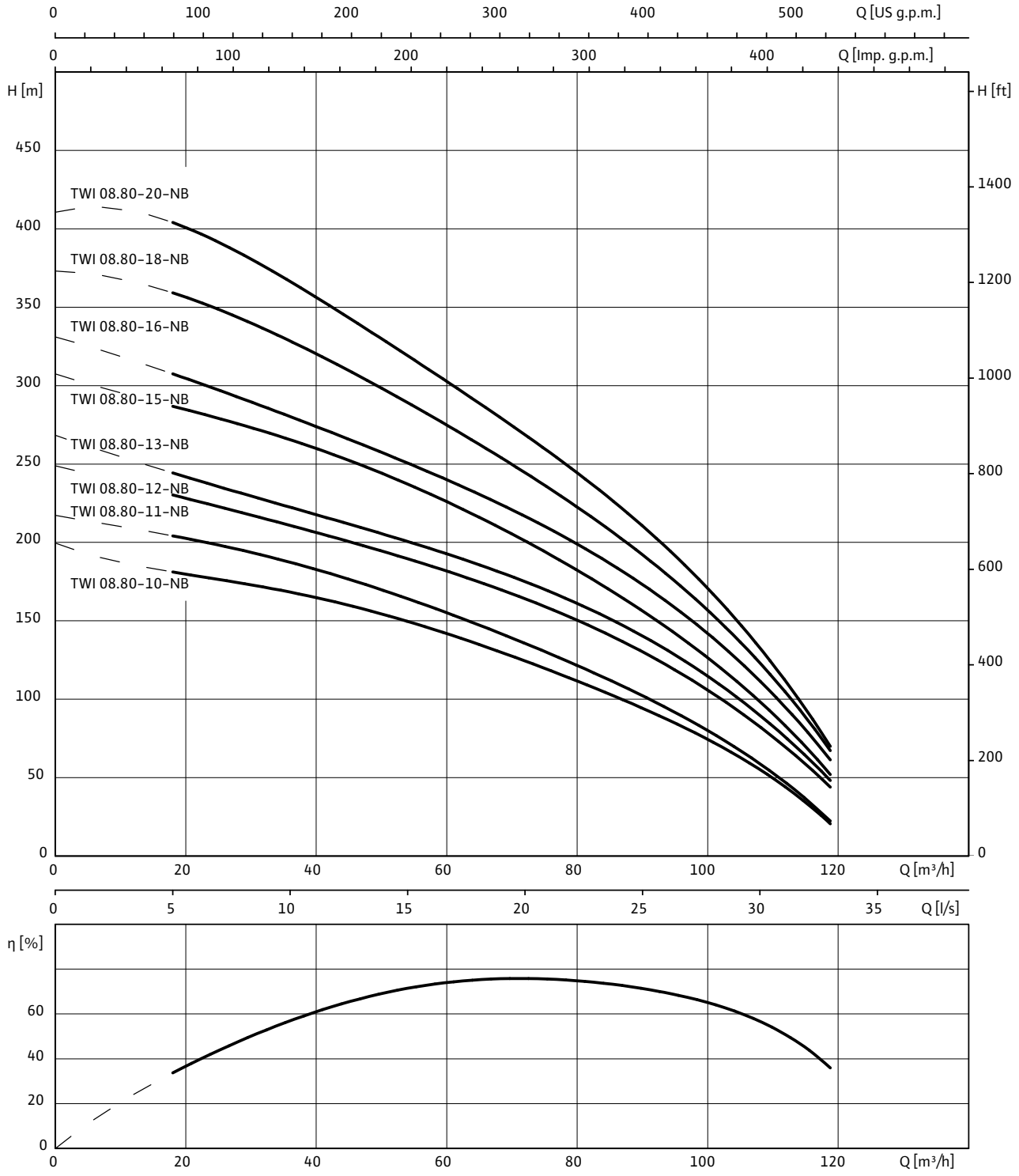

3~400 V, 50 Hz, p = 1 kg/dm^3, ν = 1x10^{-6} m^2/s, ISO 9906 Annex A, η = pump efficiency

Raw water intake

Single pumps

Wilo-Sub TWI 8.80..-B

Motor data							
Wilo-Sub...	**Type of motor**	**Motor diameter**	**Mains connection**	**Nominal motor power**	**Nominal current**	**Length of connecting cable**	**Cable cross-section**
		Ø		P_2	I_N		
		"		kW	A	m	mm^2
TWI 8.80-10-B-SD	SD	6	3~400 V, 50 Hz	37	73	4	2x 4G4
TWI 8.80-10-B-SD-R	SD-R	6	3~400 V, 50 Hz	34	71	10	2x 4G6
TWI 8.80-11-B-SD	SD	6	3~400 V, 50 Hz	45	90	4	2x 4G4
TWI 08.80-11-NB	NU 801-2/55	8	3~400 V, 50 Hz	47.5	95	–	–
TWI 8.80-12-B-SD	SD	8	3~400 V, 50 Hz	55	104	8	2x 3x1x 16
TWI 08.80-12-NB	NU 801-2/55	8	3~400 V, 50 Hz	47.5	95	–	–
TWI 08.80-13-NB	NU 701-2/55	8	3~400 V, 50 Hz	55	104	–	–
TWI 08.80-13-NB	NU 801-2/60	8	3~400 V, 50 Hz	53	104	–	–
TWI 8.80-15-B-SD	SD	8	3~400 V, 50 Hz	75	144	8	2x 3x1x 16
TWI 08.80-15-NB	NU 801-2/68	8	3~400 V, 50 Hz	59	113	–	–
TWI 8.80-16-B-SD	SD	8	3~400 V, 50 Hz	75	144	8	2x 3x1x 16
TWI 08.80-16-NB	NU 801-2/75	8	3~400 V, 50 Hz	65	129	–	–
TWI 8.80-18-B-SD	SD	8	3~400 V, 50 Hz	75	144	8	2x 3x1x 16
TWI 08.80-18-NB	NU 801-2/87	8	3~400 V, 50 Hz	75	145	–	–
TWI 8.80-20-B-SD	SD	8	3~400 V, 50 Hz	75	145	8	2x 3x1x 16
TWI 08.80-20-NB	NU 801-2/87	8	3~400 V, 50 Hz	75	145	–	–

Flange dimensions									
Wilo-Sub...	**Connection**			**Pressure class**			**Dimensions**		
	DN1	*DN2*	*DN3*	PN_1	PN_2	PN_3	*D2*	*K*	*D*
	mm			bar			mm		
TWI 8...	Rp 5	–	–	10-40	–	–	–	–	–
TWI 8...	–	DN 100	–	–	10-16	–	8x18	180	220
TWI 8...	–	DN 100	–	–	25-40	–	8x22	190	235
TWI 8...	–	DN 125	DN 125	–	10-16	10	8x18	210	250
TWI 8...	–	DN 125	–	–	25-40	–	8x26	220	270
TWI 8...	–	DN 150	DN 150	–	10-16	10	8x22	240	285
TWI 8...	–	DN 150	–	–	25-40	–	8x26	250	300

[1] On request, [3] For power cable in accordance with I_N, max. ø for threaded connection, [7] Weight of pressure shroud

Wilo-Sub TWI 8.80..-B

Dimension drawing Wilo-Sub TWI 8.80

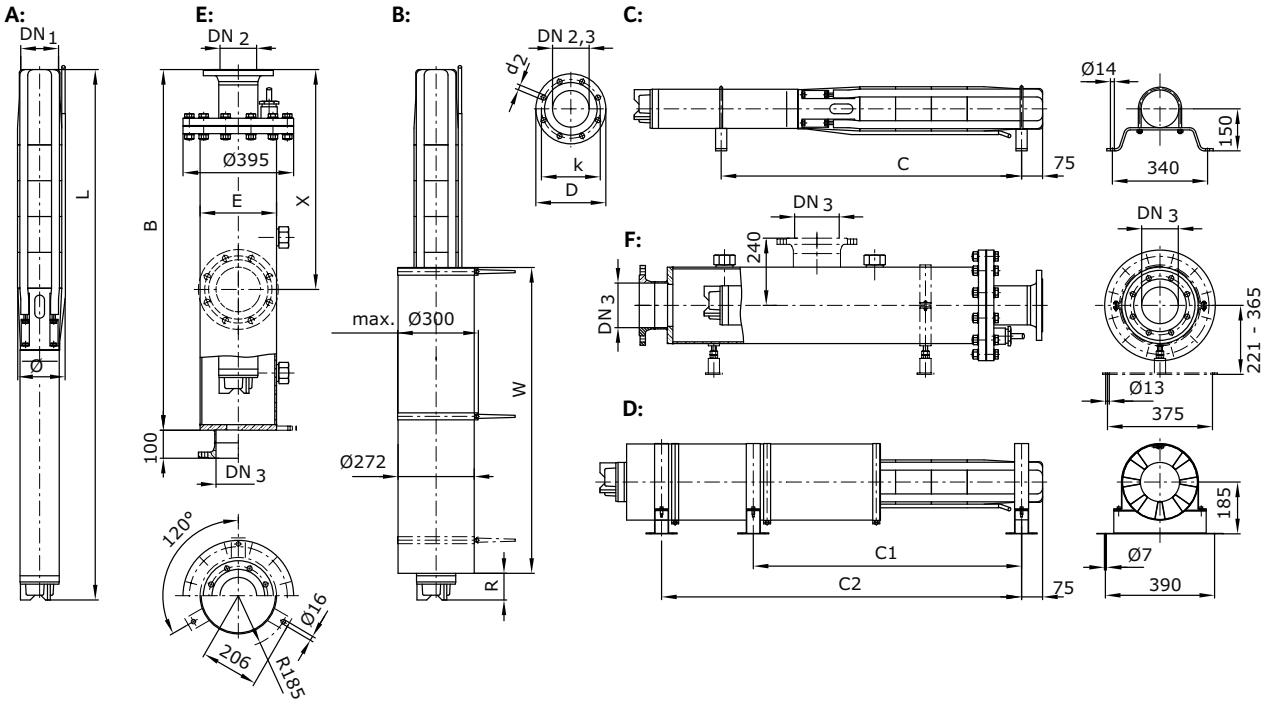

A = vertical, B = vertical with cooling jacket, C = horizontal, D = horizontal with cooling jacket, E = vertical with pressure shroud, F = horizontal with pressure shroud

Dimensions, weights

Wilo-Sub...	Type of motor	Dimensions									Weight	Weight of unit	Installation
		B	*C*	*C1*	*C2*	*E*	*L*	*R*	*W*	*ø* [3]	*Jacket* [7]	*m*	
		mm									kg		
TWI 8.80-10-B-SD	SD	[1]	2400	2348		[1]	3177	157	1550	186	[1]	192	A, B, C, D, E, F
TWI 8.80-10-B-SD-R	SD-R	[1]	2350	2348		[1]	3081	186	1400	186	[1]	158	A, B, C, D, E, F
TWI 8.80-11-B-SD	SD	[1]	2610	2476		[1]	3457	59	1800	186	[1]	209	A, B, C, D, E, F
TWI 08.80-11-NB	NU 801-2/55	[1]	2400	2217	2808	[1]	3045	141	1300	204	[1]	206	A, B, C, D, E, F
TWI 8.80-12-B-SD	SD	[1]				[1]	3243	100	1400	204	[1]	241	A, B, E
TWI 08.80-12-NB	NU 801-2/55	[1]	2520	2343	2934	[1]	3184	141	1300	204	[1]	211	A, B, C, D, E, F
TWI 08.80-13-NB	NU 701-2/55	[1]				[1]	3372	100	1400	204	[1]	245	A, B, E
TWI 08.80-13-NB	NU 801-2/60	[1]	2680	2722	3113	[1]	3363	91	1400	204	[1]	223	A, B, C, D, E, F
TWI 8.80-15-B-SD	SD	[1]				[1]	3819	141	1550	204	[1]	290	A, B, E
TWI 08.80-15-NB	NU 801-2/68	[1]				[1]	3699	150	1421	204	[1]	244	A, B, E
TWI 8.80-16-B-SD	SD	[1]				[1]	3947	141	1550	204	[1]	293	A, B, E
TWI 08.80-16-NB	NU 801-2/75	[1]				[1]	3897	91	1550	204	[1]	260	A, B, E
TWI 8.80-18-B-SD	SD	[1]				[1]	4204	141	1550	204	[1]	301	A, B, E
TWI 08.80-18-NB	NU 801-2/87	[1]				[1]	4274	61	1700	204	[1]	288	A, B, E
TWI 8.80-20-B-SD	SD	[1]				[1]	4460	141	1550	204	[1]	308	A, B, E
TWI 08.80-20-NB	NU 801-2/87	[1]				[1]	4530	61	1700	204	[1]	295	A, B, E

[1] On request, [3] For power cable in accordance with I_N, max. ø for threaded connection, [7] Weight of pressure shroud

Wilo-Sub TWI 8.80..-B

Information for order placements					
Wilo-Sub...	**Type of motor**	🚚	**Art no.**	**Art. no. for cooling jacket pipe**	
				for vertical installation (B)	*for horizontal installation (D)*
TWI 8.80-10-B-SD	SD	A	6047744	6043171	6043235
TWI 8.80-10-B-SD-R	SD-R	A	6047804	6043151	6043222
TWI 8.80-11-B-SD	SD	A	6047745	6043184	6043239
TWI 08.80-11-NB	NU 801-2/55	A	–	6043162	6043251
TWI 8.80-12-B-SD	SD	A	6047746	6043156	–
TWI 08.80-12-NB	NU 801-2/55	A	–	6043162	6043251
TWI 08.80-13-NB	NU 701-2/55	A	–	6043156	–
TWI 08.80-13-NB	NU 801-2/60	A	–	6043154	6043248
TWI 8.80-15-B-SD	SD	A	6047747	6043180	–
TWI 08.80-15-NB	NU 801-2/68	A	–	6043154	–
TWI 8.80-16-B-SD	SD	A	6047748	6043180	–
TWI 08.80-16-NB	NU 801-2/75	A	–	6043177	–
TWI 8.80-18-B-SD	SD	A	6047749	6043180	–
TWI 08.80-18-NB	NU 801-2/87	A	–	6043186	–
TWI 8.80-20-B-SD	SD	A	6047750	6043180	–
TWI 08.80-20-NB	NU 801-2/87	A	–	6043186	–

Motor efficiency based on 400 V, 50 Hz

Wilo-Sub TWI 8.90..-B

Pump curves Wilo-Sub TWI 8.90..-B

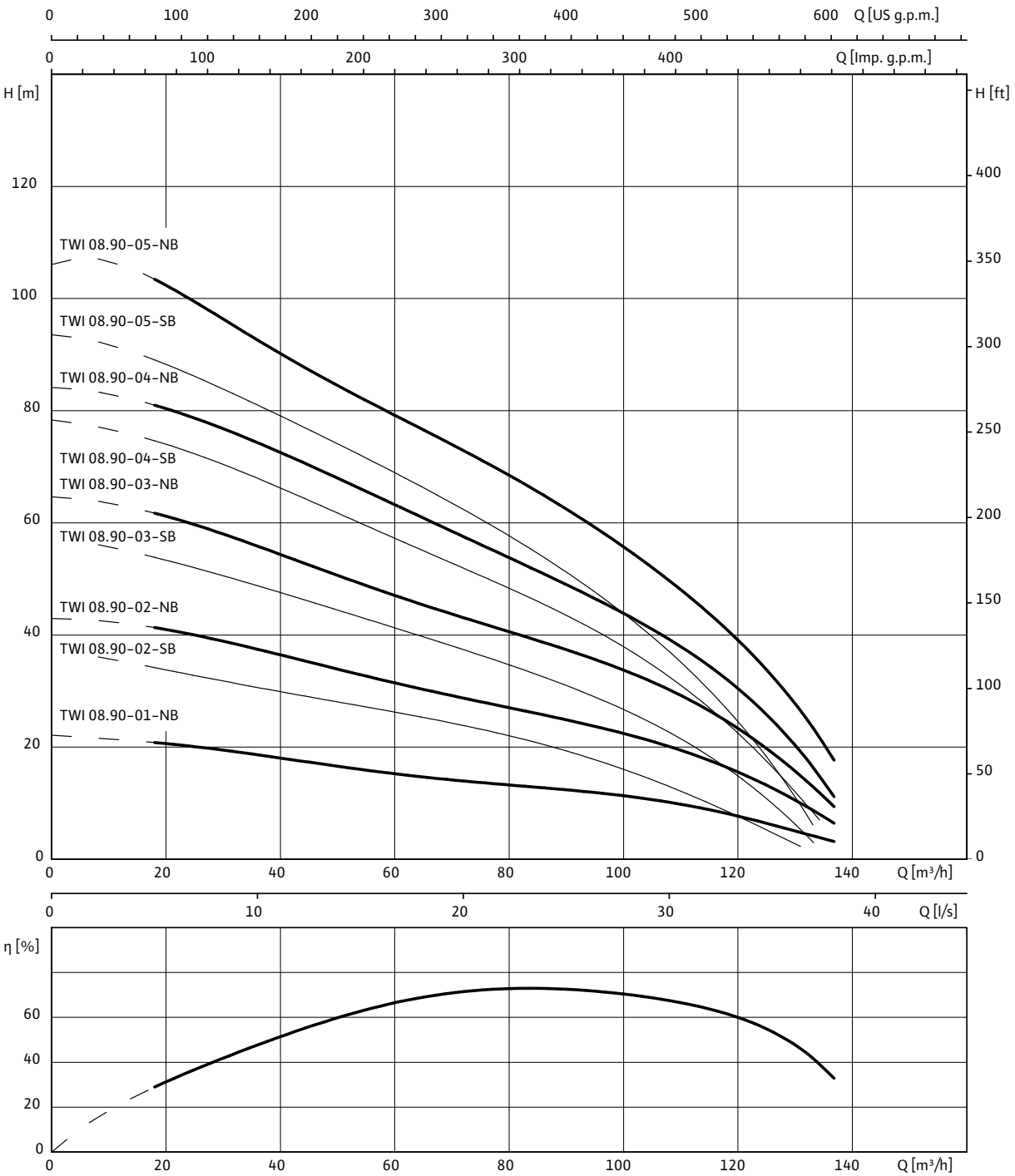

3~400 V, 50 Hz, p = 1 kg/dm^3, ν = 1x10^{-6} m^2/s, ISO 9906 Annex A, η = pump efficiency

Raw water intake

Single pumps

Wilo-Sub TWI 8.90..-B

Motor data							
Wilo-Sub...	**Type of motor**	**Motor diameter**	**Mains connection**	**Nominal motor power**	**Nominal current**	**Length of connecting cable**	**Cable cross-section**
		Ø		P_2	I_N		
		"		kW	A	m	mm^2
TWI 8.90-01-B-SD	SD	6	3~400 V, 50 Hz	5.5	12.3	4	2x 4G4
TWI 8.90-01-B-SD-R	SD-R	6	3~400 V, 50 Hz	5.5	12	10	2x 4G2.5
TWI 8.90-02-B-SD	SD	6	3~400 V, 50 Hz	9.3	21	4	2x 4G4
TWI 8.90-02-B-SD-R	SD-R	6	3~400 V, 50 Hz	9.2	20.5	10	2x 4G2.5
TWI 08.90-02-SB	NU 501-2/7	6	3~400 V, 50 Hz	7.5	16	–	–
TWI 08.90-02-SB	NU 611-2/7	6	3~400 V, 50 Hz	7.5	16.8	–	–
TWI 8.90-03-B-SD	SD	6	3~400 V, 50 Hz	15	31.5	4	2x 4G4
TWI 8.90-03-B-SD-R	SD-R	6	3~400 V, 50 Hz	15	32	10	2x 4G2.5
TWI 08.90-03-SB	NU 501-2/15	6	3~400 V, 50 Hz	15	31.5	–	–
TWI 08.90-03-SB	NU 611-2/13	6	3~400 V, 50 Hz	13	28.5	–	–
TWI 8.90-04-B-SD	SD	6	3~400 V, 50 Hz	18.5	38.5	4	2x 4G4
TWI 8.90-04-B-SD-R	SD-R	6	3~400 V, 50 Hz	18.5	40	10	2x 4G2.5
TWI 08.90-04-SB	NU501-2/18	6	3~400 V, 50 Hz	18.5	38.5	–	–
TWI 08.90-04-SB	NU 611-2/18	6	3~400 V, 50 Hz	18.5	40	–	–
TWI 8.90-05-B-SD	SD	6	3~400 V, 50 Hz	22	44.5	4	2x 4G4
TWI 8.90-05-B-SD-R	SD-R	6	3~400 V, 50 Hz	22	47.5	10	2x 4G2.5
TWI 08.90-05-SB	NU 501-2/22	6	3~400 V, 50 Hz	22	44.5	–	–
TWI 08.90-05-SB	NU 611-2/18	6	3~400 V, 50 Hz	18.5	40	–	–

Flange dimensions									
Wilo-Sub...	**Connection**			**Pressure class**			**Dimensions**		
	DN1	*DN2*	*DN3*	PN_1	PN_2	PN_3	*D2*	*K*	*D*
	mm			bar			mm		
TWI 8...	Rp 5	–	–	10-40	–	–	–	–	–
TWI 8...	–	DN 100	–	–	10-16	–	8x18	180	220
TWI 8...	–	DN 100	–	–	25-40	–	8x22	190	235
TWI 8...	–	DN 125	DN 125	–	10-16	10	8x18	210	250
TWI 8...	–	DN 125	–	–	25-40	–	8x26	220	270
TWI 8...	–	DN 150	DN 150	–	10-16	10	8x22	240	285
TWI 8...	–	DN 150	–	–	25-40	–	8x26	250	300

[1] On request, [3] For power cable in accordance with I_N, max. ø for threaded connection, [7] Weight of pressure shroud

Wilo-Sub TWI 8.90..-B

Dimension drawing Wilo-Sub TWI 8.90

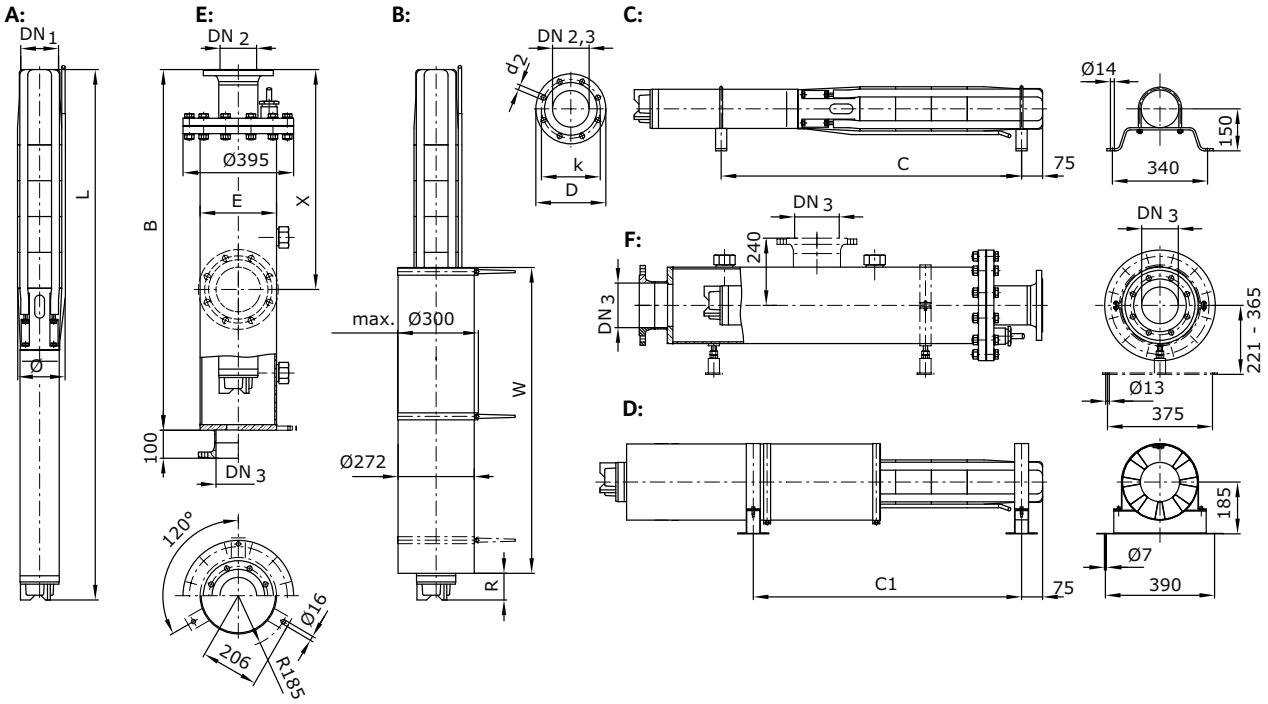

A = vertical, B = vertical with cooling jacket, C = horizontal, D = horizontal with cooling jacket, E = vertical with pressure shroud, F = horizontal with pressure shroud

Dimensions, weights

Wilo-Sub...	Type of motor	Dimensions								Weight	Weight of unit	Installation
		B	*C*	*C1*	*E*	*L*	*R*	*W*	*ø* [3]	*Jacket*[7]	*m*	
		mm								kg		
TWI 8.90-01-B-SD	SD	1700	840	783	273	1232	65	835	186	108	66	A, B, C, D, E, F
TWI 8.90-01-B-SD-R	SD-R	1700	880	783	273	1315	139	835	186	108	69	A, B, C, D, E, F
TWI 8.90-02-B-SD	SD	2000	1000	911	273	1425	129	835	186	116	76	A, B, C, D, E, F
TWI 8.90-02-B-SD-R	SD-R	2000	1040	1077	273	1515	46	1000	186	116	81	A, B, C, D, E, F
TWI 08.90-02-SB	NU 501-2/7	2000	980	911	273	1392	96	835	186	116	74	A, B, C, D, E, F
TWI 08.90-02-SB	NU 611-2/7	2000	1020	911	273	1475	171	835	186	116	77	A, B, C, D, E, F
TWI 8.90-03-B-SD	SD	2000	1180	1212	273	1650	61	1000	186	116	89	A, B, C, D, E, F
TWI 8.90-03-B-SD-R	SD-R	2300	1260	1189	273	1813	66	1150	186	124	101	A, B, C, D, E, F
TWI 08.90-03-SB	NU 501-2/15	2000	1180	1212	273	1650	61	1000	186	116	89	A, B, C, D, E, F
TWI 08.90-03-SB	NU 611-2/13	2300	1230	1265	273	1763	166	1000	186	124	96	A, B, C, D, E, F
TWI 8.90-04-B-SD	SD	2300	1340	1374	273	1845	127	1000	186	124	99	A, B, C, D, E, F
TWI 8.90-04-B-SD-R	SD-R	2600	1420	1318	273	2007	131	1150	186	132	112	A, B, C, D, E, F
TWI 08.90-04-SB	NU501-2/18	2300	1340	1374	273	1845	127	1000	186	124	99	A, B, C, D, E, F
TWI 08.90-04-SB	NU 611-2/18	2600	1420	1318	273	2007	131	1150	186	132	112	A, B, C, D, E, F
TWI 8.90-05-B-SD	SD	2600	1500	1535	273	2038	192	1000	186	132	109	A, B, C, D, E, F
TWI 8.90-05-B-SD-R	SD-R	2600	1590	1446	273	2210	150	1206	186	132	123	A, B, C, D, E, F
TWI 08.90-05-SB	NU 501-2/22	2600	1500	1535	273	2038	192	1000	186	132	109	A, B, C, D, E, F
TWI 08.90-05-SB	NU 611-2/18	2600	1570	1446	273	2135	131	1150	186	132	116	A, B, C, D, E, F

[1] On request, [3] For power cable in accordance with I_N, max. ø for threaded connection, [7] Weight of pressure shroud

Raw water intake

Single pumps

Wilo-Sub TWI 8.90..-B

Information for order placements					
Wilo-Sub...	**Type of motor**	🚚	**Art no.**	**Art. no. for cooling jacket pipe**	
				for vertical in-stallation (B)	*for horizontal in-stallation (D)*
TWI 8.90-01-B-SD	SD	A	6047751	6043124	6043199
TWI 8.90-01-B-SD-R	SD-R	A	6047805	6043128	6043203
TWI 8.90-02-B-SD	SD	A	6047752	6043124	6043199
TWI 8.90-02-B-SD-R	SD-R	A	6047806	6043195	6043246
TWI 08.90-02-SB	NU 501-2/7	A	–	6043124	6043199
TWI 08.90-02-SB	NU 611-2/7	A	–	6043128	6043203
TWI 8.90-03-B-SD	SD	A	6047753	6043191	6043242
TWI 8.90-03-B-SD-R	SD-R	A	6047807	6043145	6043216
TWI 08.90-03-SB	NU 501-2/15	A	–	6043191	6043242
TWI 08.90-03-SB	NU 611-2/13	A	–	6043195	6043246
TWI 8.90-04-B-SD	SD	A	6047754	6043191	6043242
TWI 8.90-04-B-SD-R	SD-R	A	6047808	6043145	6043216
TWI 08.90-04-SB	NU501-2/18	A	–	6043191	6043242
TWI 08.90-04-SB	NU 611-2/18	A	–	6043145	6043216
TWI 8.90-05-B-SD	SD	A	6047755	6043191	6043242
TWI 8.90-05-B-SD-R	SD-R	A	6047809	6043145	6043216
TWI 08.90-05-SB	NU 501-2/22	A	–	6043191	6043242
TWI 08.90-05-SB	NU 611-2/18	A	–	6043145	6043216

Motor efficiency based on 400 V, 50 Hz

Wilo-Sub TWI 8.90..-B

Pump curves Wilo-Sub TWI 8.90..-B

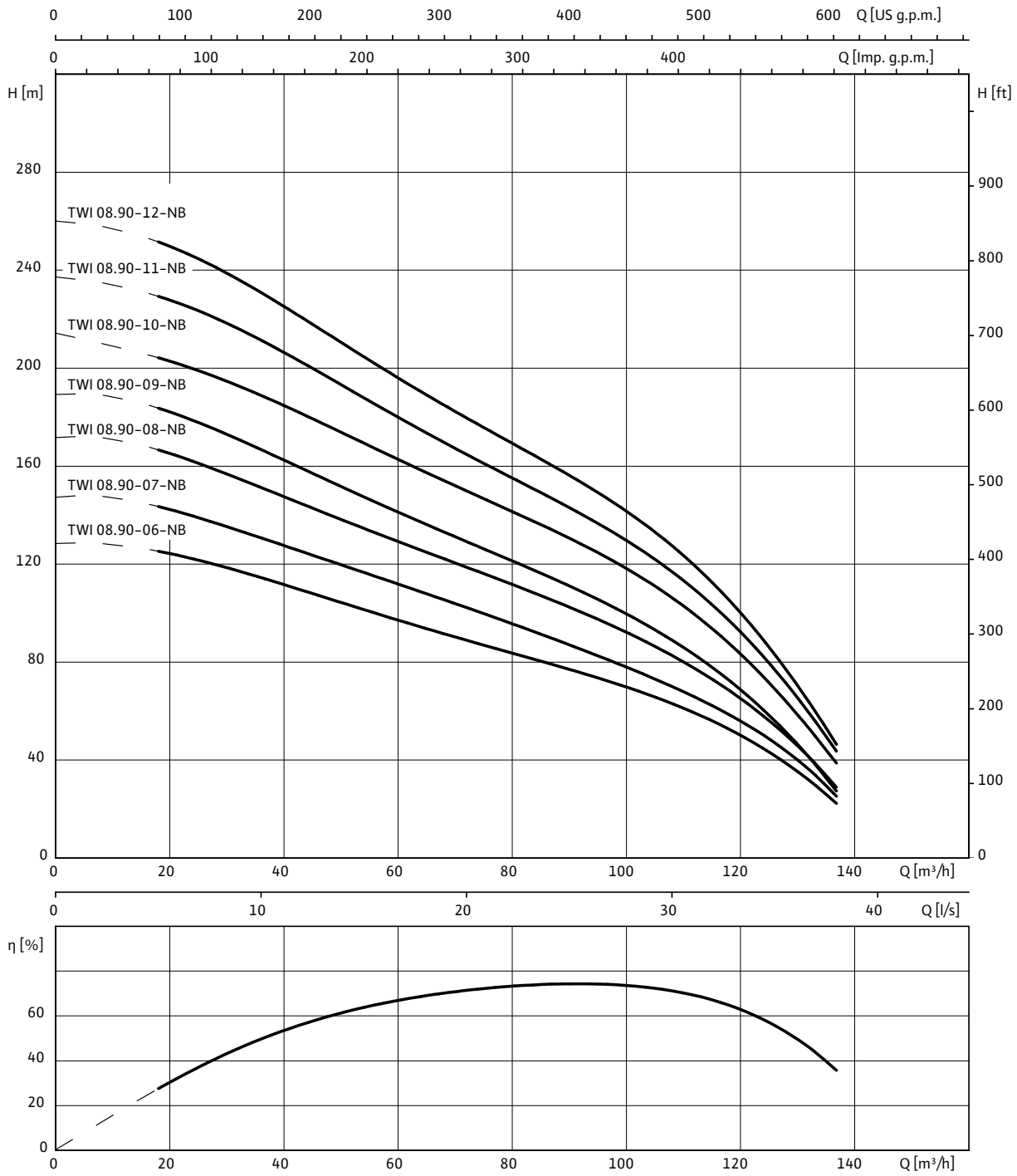

3~400 V, 50 Hz, p = 1 kg/dm^3, ν = 1x10^{-6} m^2/s, ISO 9906 Annex A, η = pump efficiency

Raw water intake

Single pumps

Wilo-Sub TWI 8.90..-B

Motor data							
Wilo-Sub...	**Type of motor**	**Motor diameter**	**Mains connection**	**Nominal motor power**	**Nominal current**	**Length of connecting cable**	**Cable cross-section**
		Ø		P_2	I_N		
		"		kW	A	m	mm^2
TWI 8.90-06-B-SD	SD	6	3~400 V, 50 Hz	30	63	4	2x 4G4
TWI 8.90-06-B-SD-R	SD-R	6	3~400 V, 50 Hz	30	63	10	2x 4G4
TWI 8.90-07-B-SD	SD	6	3~400 V, 50 Hz	37	71	4	2x 4G4
TWI 8.90-07-B-SD-R	SD-R	6	3~400 V, 50 Hz	34	71	10	2x 4G6
TWI 8.90-08-B-SD	SD	6	3~400 V, 50 Hz	37	71	4	2x 4G4
TWI 8.90-08-B-SD-R	SD-R	6	3~400 V, 50 Hz	37	77	10	2x 4G6
TWI 8.90-09-B-SD	SD	6	3~400 V, 50 Hz	45	90	4	2x 4G4
TWI 08.90-09-NB	NU 801-2/55	8	3~400 V, 50 Hz	47.5	95	–	–
TWI 8.90-10-B-SD	SD	8	3~400 V, 50 Hz	55	104	8	2x 3x1x 16
TWI 08.90-10-NB	NU 801-2/55	8	3~400 V, 50 Hz	47.5	95	–	–
TWI 8.90-11-B-SD	SD	8	3~400 V, 50 Hz	55	104	8	2x 3x1x 16
TWI 08.90-11-NB	NU 801-2/60	8	3~400 V, 50 Hz	53	104	–	–
TWI 8.90-12-B-SD	SD	8	3~400 V, 50 Hz	55	104	8	2x 3x1x 16
TWI 08.90-12-NB	NU 801-2/68	8	3~400 V, 50 Hz	59	113	–	–

Flange dimensions									
Wilo-Sub...	**Connection**			**Pressure class**			**Dimensions**		
	DN1	*DN2*	*DN3*	PN_1	PN_2	PN_3	*D2*	*K*	*D*
	mm			bar			mm		
TWI 8...	Rp 5	–	–	10-40	–	–	–	–	–
TWI 8...	–	DN 100	–	–	10-16	–	8x18	180	220
TWI 8...	–	DN 100	–	–	25-40	–	8x22	190	235
TWI 8...	–	DN 125	DN 125	–	10-16	10	8x18	210	250
TWI 8...	–	DN 125	–	–	25-40	–	8x26	220	270
TWI 8...	–	DN 150	DN 150	–	10-16	10	8x22	240	285
TWI 8...	–	DN 150	–	–	25-40	–	8x26	250	300

[1] On request, [3] For power cable in accordance with I_N, max. ø for threaded connection, [7] Weight of pressure shroud

Wilo-Sub TWI 8.90..-B

Dimension drawing Wilo-Sub TWI 8.90

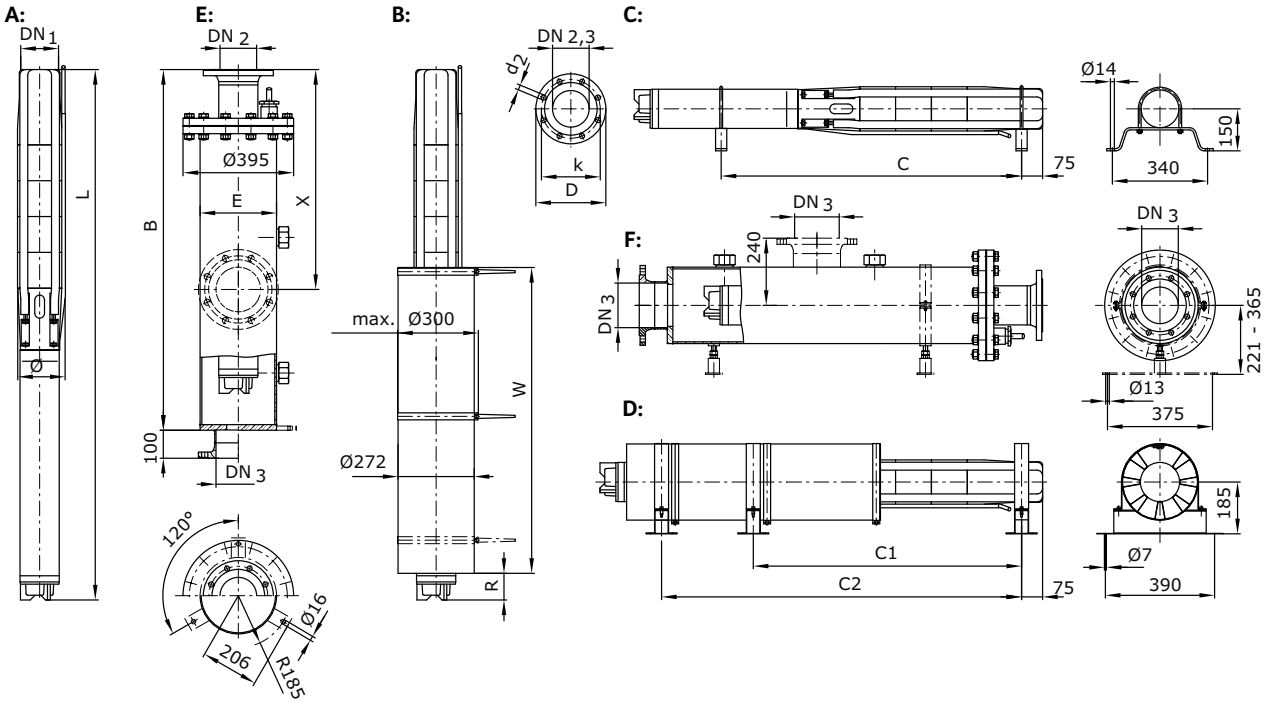

A = vertical, B = vertical with cooling jacket, C = horizontal, D = horizontal with cooling jacket, E = vertical with pressure shroud, F = horizontal with pressure shroud

Dimensions, weights

Wilo-Sub...	Type of motor	Dimensions									Weight	Weight of unit	Installation
		B	*C*	*C1*	*C2*	*E*	*L*	*R*	*W*	*ø* [3]	*Jacket* [7]	*m*	
		mm									kg		
TWI 8.90-06-B-SD	SD	2900	1700	1574	–	273	2296	172	1150	186	140	127	A, B, C, D, E, F
TWI 8.90-06-B-SD-R	SD-R	2900	1800	1824	–	273	2518	136	1400	186	140	140	A, B, C, D, E, F
TWI 8.90-07-B-SD	SD	[1]	2010	1963	–	[1]	2792	157	1550	186	[1]	182	A, B, C, D, E, F
TWI 8.90-07-B-SD-R	SD-R	[1]	1690	1963	–	[1]	2696	186	1400	186	[1]	148	A, B, C, D, E, F
TWI 8.90-08-B-SD	SD	[1]	2140	2092	–	[1]	2920	157	1550	186	[1]	185	A, B, C, D, E, F
TWI 8.90-08-B-SD-R	SD-R	[1]	–	–	–	[1]	2904	116	1550	186	[1]	156	A, B, E
TWI 8.90-09-B-SD	SD	[1]	2350	2220	–	[1]	3201	67	1800	186	[1]	202	A, B, C, D, E, F
TWI 08.90-09-NB	NU 801-2/55	[1]	2140	1959	2550	[1]	2789	141	1300	204	[1]	199	A, B, C, D, E, F
TWI 8.90-10-B-SD	SD	[1]	–	–	–	[1]	2845	100	1400	204	[1]	204	A, B, E
TWI 08.90-10-NB	NU 801-2/55	[1]	2270	2087	2678	[1]	2928	141	1300	204	[1]	204	A, B, C, D, E, F
TWI 8.90-11-B-SD	SD	[1]	–	–	–	[1]	3115	100	1400	204	[1]	236	A, B, E
TWI 08.90-11-NB	NU 801-2/60	[1]	2430	2465	2856	[1]	3106	91	1400	204	[1]	215	A, B, C, D, E, F
TWI 8.90-12-B-SD	SD	[1]	–	–	–	[1]	3243	100	1400	204	[1]	241	A, B, E
TWI 08.90-12-NB	NU 801-2/68	[1]	–	–	–	[1]	3314	150	1421	204	[1]	233	A, B, E

[1] On request, [3] For power cable in accordance with I_N, max. ø for threaded connection, [7] Weight of pressure shroud

Wilo-Sub TWI 8.90..-B

Information for order placements					
Wilo-Sub...	**Type of motor**	🚚	**Art no.**	**Art. no. for cooling jacket pipe**	
				for vertical installation (B)	*for horizontal installation (D)*
TWI 8.90-06-B-SD	SD	A	6047756	6043141	6043212
TWI 8.90-06-B-SD-R	SD-R	A	6047810	6043151	6043222
TWI 8.90-07-B-SD	SD	A	6047757	6043171	6043235
TWI 8.90-07-B-SD-R	SD-R	A	6047811	6043151	6043222
TWI 8.90-08-B-SD	SD	A	6047758	6043171	6043235
TWI 8.90-08-B-SD-R	SD-R	A	6047812	6043174	–
TWI 8.90-09-B-SD	SD	A	6047759	6043184	6043239
TWI 08.90-09-NB	NU 801-2/55	A	–	6043162	6043251
TWI 8.90-10-B-SD	SD	A	6047760	6043156	–
TWI 08.90-10-NB	NU 801-2/55	A	–	6043162	6043251
TWI 8.90-11-B-SD	SD	A	6047761	6043156	–
TWI 08.90-11-NB	NU 801-2/60	A	–	6043154	6043248
TWI 8.90-12-B-SD	SD	A	6047762	6043156	–
TWI 08.90-12-NB	NU 801-2/68	A	–	6043154	–

Motor efficiency based on 400 V, 50 Hz

Wilo-Sub TWI 8.90..-B

Pump curves Wilo-Sub TWI 8.90..-B

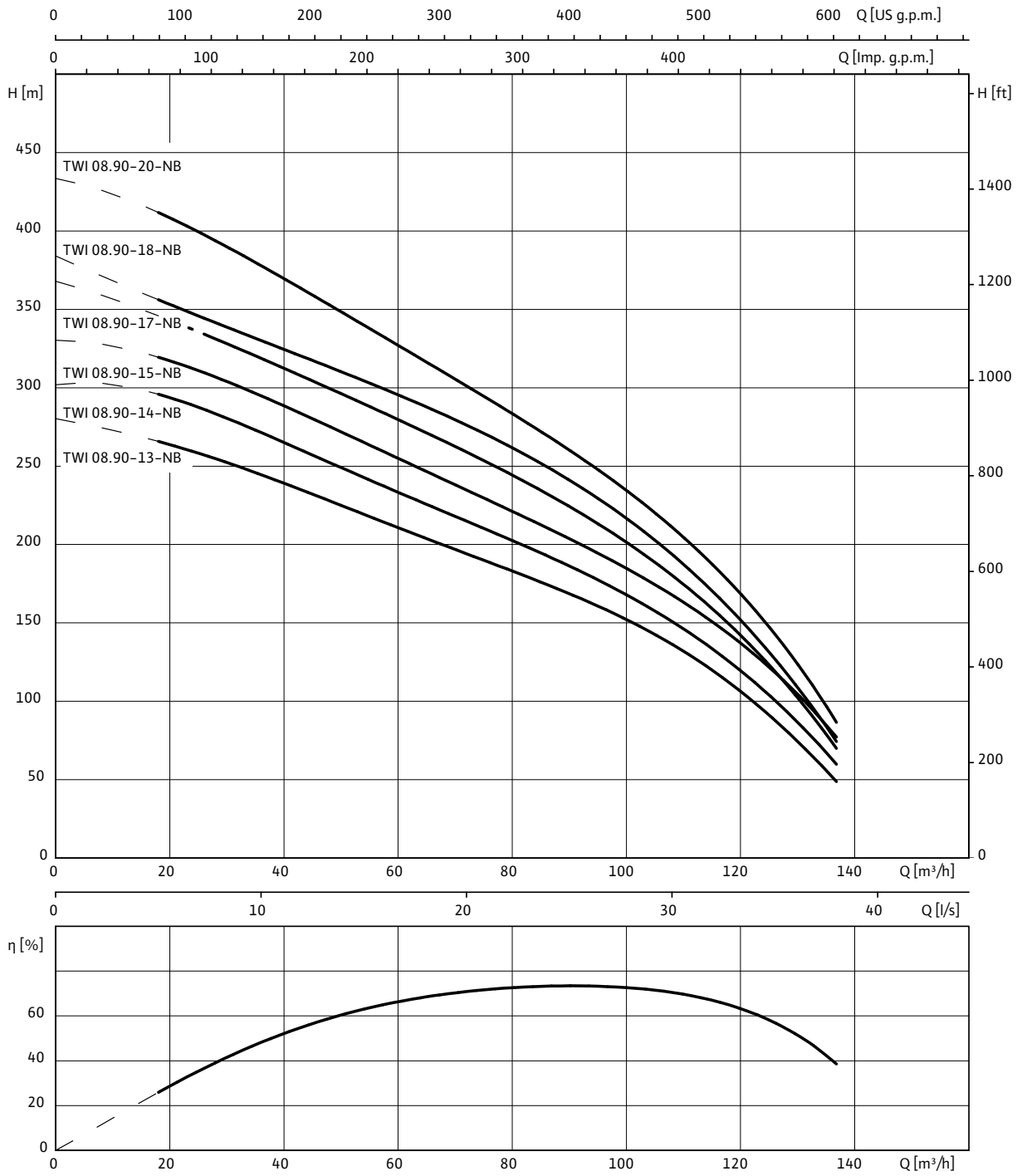

3~400 V, 50 Hz, p = 1 kg/dm^3, ν = 1x10^{-6} m^2/s, ISO 9906 Annex A, η = pump efficiency

Raw water intake

Single pumps

Wilo-Sub TWI 8.90..-B

Motor data							
Wilo-Sub...	**Type of motor**	**Motor diameter**	**Mains connection**	**Nominal motor power**	**Nominal current**	**Length of connecting cable**	**Cable cross-section**
		Ø		P_2	I_N		
		"		kW	A	m	mm^2
TWI 8.90-13-B-SD	SD	8	3~400 V, 50 Hz	75	145	8	2x 3x1x 16
TWI 08.90-13-NB	NU 801-2/75	8	3~400 V, 50 Hz	65	129	–	–
TWI 8.90-14-B-SD	SD	8	3~400 V, 50 Hz	75	145	8	2x 3x1x 16
TWI 08.90-14-NB	NU 801-2/87	8	3~400 V, 50 Hz	75	145	–	–
TWI 8.90-15-B-SD	SD	8	3~400 V, 50 Hz	75	145	8	2x 3x1x 16
TWI 08.90-15-NB	NU 801-2/87	8	3~400 V, 50 Hz	75	145	–	–
TWI 8.90-17-B-SD	SD	8	3~400 V, 50 Hz	93	186	8	2x 3x1x 16
TWI 08.90-17-NB	NU 811-2/90	8	3~400 V, 50 Hz	90	168	–	–
TWI 8.90-18-B-SD	SD	8	3~400 V, 50 Hz	93	186	8	2x 3x1x 16
TWI 08.90-18-NB	NU 811-2/90	8	3~400 V, 50 Hz	90	168	–	–
TWI 8.90-20-B-SD	SD	8	3~400 V, 50 Hz	93	186	8	2x 3x1x 16
TWI 08.90-20-NB	NU 811-2/90	8	3~400 V, 50 Hz	90	168	–	–

Flange dimensions									
Wilo-Sub...	**Connection**			**Pressure class**			**Dimensions**		
	DN1	*DN2*	*DN3*	PN_1	PN_2	PN_3	*D2*	*K*	*D*
	mm			bar			mm		
TWI 8...	Rp 5	–	–	10-40	–	–	–	–	–
TWI 8...	–	DN 100	–	–	10-16	–	8x18	180	220
TWI 8...	–	DN 100	–	–	25-40	–	8x22	190	235
TWI 8...	–	DN 125	DN 125	–	10-16	10	8x18	210	250
TWI 8...	–	DN 125	–	–	25-40	–	8x26	220	270
TWI 8...	–	DN 150	DN 150	–	10-16	10	8x22	240	285
TWI 8...	–	DN 150	–	–	25-40	–	8x26	250	300

[1] On request, [3] For power cable in accordance with I_N, max. ø for threaded connection, [7] Weight of pressure shroud

Wilo-Sub TWI 8.90..-B

Dimension drawing Wilo-Sub TWI 8.90

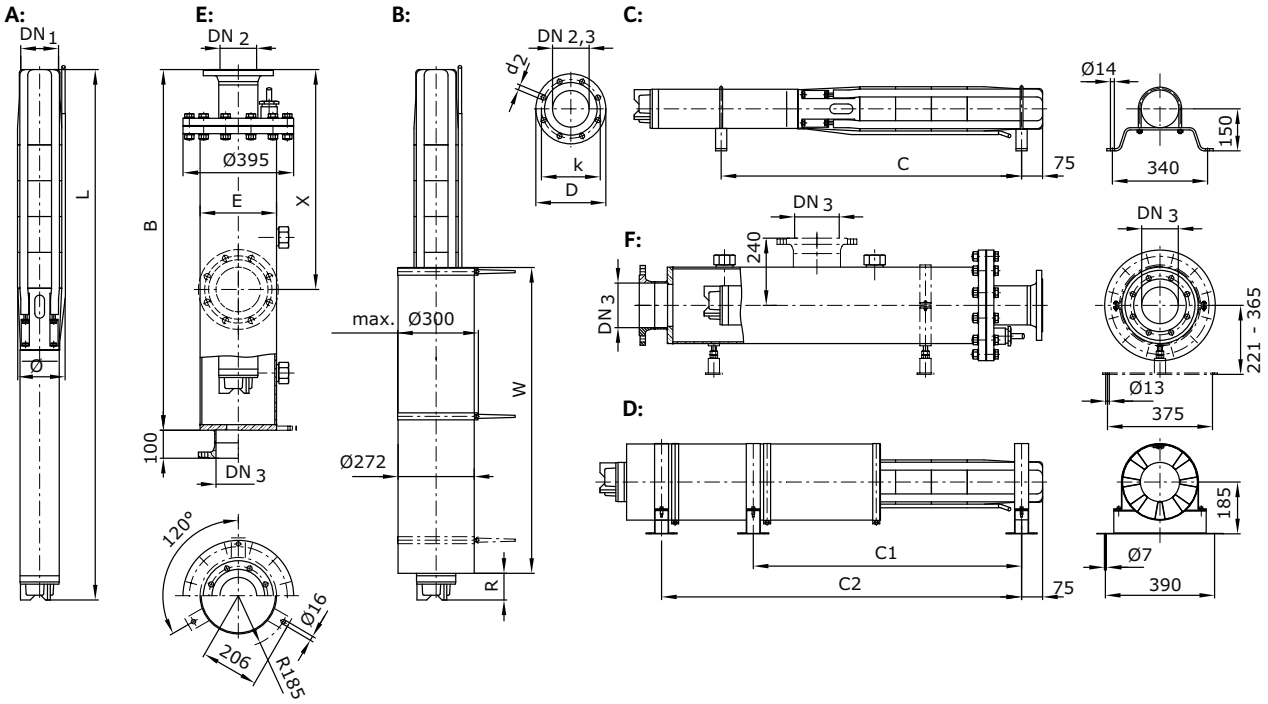

A = vertical, B = vertical with cooling jacket, C = horizontal, D = horizontal with cooling jacket, E = vertical with pressure shroud, F = horizontal with pressure shroud

Dimensions, weights

Wilo-Sub...	Type of motor	Dimensions									Weight	Weight of unit	Installation
		B	*C*	*C1*	*C2*	*E*	*L*	*R*	*W*	*ø* [3]	*Jacket* [7]	*m*	
		mm									kg		
TWI 8.90-13-B-SD	SD	[1]	–	–	–	[1]	3563	141	1550	204	[1]	283	A, B, E
TWI 08.90-13-NB	NU 801-2/75	[1]	–	–	–	[1]	3513	91	1550	204	[1]	250	A, B, E
TWI 8.90-14-B-SD	SD	[1]	–	–	–	[1]	3691	141	1550	204	[1]	286	A, B, E
TWI 08.90-14-NB	NU 801-2/87	[1]	–	–	–	[1]	3761	61	1700	204	[1]	273	A, B, E
TWI 8.90-15-B-SD	SD	[1]	–	–	–	[1]	3819	141	1550	204	[1]	290	A, B, E
TWI 08.90-15-NB	NU 801-2/87	[1]	–	–	–	[1]	3889	61	1700	204	[1]	277	A, B, E
TWI 8.90-17-B-SD	SD	[1]	3470	3234	4027	[1]	4427	243	1800	204	[1]	375	A, B, C, D, E, F
TWI 08.90-17-NB	NU 811-2/90	[1]	–	–	–	[1]	4252	66	1800	204	[1]	285	A, B, E
TWI 8.90-18-B-SD	SD	[1]	3590	3363	4156	[1]	4556	243	1800	204	[1]	379	A, B, C, D, E, F
TWI 08.90-18-NB	NU 811-2/90	[1]	–	–	–	[1]	4381	66	1800	204	[1]	289	A, B, E
TWI 8.90-20-B-SD	SD	[1]	3850	3619	4412	[1]	4812	243	1850	204	[1]	386	A, B, C, D, E, F
TWI 08.90-20-NB	NU 811-2/90	[1]	–	–	–	[1]	4637	66	1800	204	[1]	296	A, B, E

[1] On request, [3] For power cable in accordance with I_N, max. ø for threaded connection, [7] Weight of pressure shroud

Wilo-Sub TWI 8.90..-B

Information for order placements					
Wilo-Sub...	**Type of motor**	🚚	**Art no.**	**Art. no. for cooling jacket pipe**	
				for vertical installation (B)	*for horizontal installation (D)*
TWI 8.90-13-B-SD	SD	A	6047763	6043180	–
TWI 08.90-13-NB	NU 801-2/75	A	–	6043177	–
TWI 8.90-14-B-SD	SD	A	6047764	6043180	–
TWI 08.90-14-NB	NU 801-2/87	A	–	6043186	–
TWI 8.90-15-B-SD	SD	A	6047765	6043180	–
TWI 08.90-15-NB	NU 801-2/87	A	–	6043186	–
TWI 8.90-17-B-SD	SD	A	6047766	6043188	6043253
TWI 08.90-17-NB	NU 811-2/90	A	–	6043186	–
TWI 8.90-18-B-SD	SD	A	6047767	6043188	6043253
TWI 08.90-18-NB	NU 811-2/90	A	–	6043186	–
TWI 8.90-20-B-SD	SD	A	6047768	6043188	6043253
TWI 08.90-20-NB	NU 811-2/90	A	–	6043186	–

Motor efficiency based on 400 V, 50 Hz

Series description Wilo-Sub TWI 10-..-A

Design
Submersible pump, multistage

Type key

Example:	**Wilo-Sub TWI 010.125-02-NA + NU 811-2/90**
Hydraulics:	**TWI 010.125-02-NA**
TWI	Hydraulics
0	Configurable series
10	Diameter of the hydraulic unit in inches ["]
125	Rated volume flow [m^3/h]
02	Number of hydraulic stages
N	Impeller diameter (N = Standard, S = trimmed)
A	Series generation
Motor:	**NU 811-2/90**
NU	Submersible motor
811	Size (5..., 6... = 6"; 7..., 8... = 8")
2	Number of poles
90	Package length

Application
- For water and potable water supply from boreholes and rainwater storage
- Process water supply
- For municipal water supply, sprinkling and irrigation
- Pressure boosting
- Lowering the water level
- For pumping water in industrial applications
- For pumping water without long-fibre and abrasive constituents

Special features/product advantages
- Easy maintenance due to rapid installation and dismantling
- Integrated non-return valve
- Vertical and horizontal (stage-dependent) installation possible
- Star/delta starting
- Cast and rewindable motors
- Hydraulics in corrosion-free stainless steel design

Technical data
- Mains connection: 3~400 V, 50 Hz
- Immersed operating mode: S1
- Fluid temperature:
  - Hermetically cast motors: 3-20 °C or 3-30 °C (depending on type)
  - Rewindable motors: 3-30 °C (depending on type)
- Minimum motor flow: 0.1-0.5 m/s (depending on type)
- Max. sand content: 50 g/m^3
- Max. number of starts: 10-20/h (depending on type)
- Max. immersion depth: 100 - 350 m (depending on type)
- Protection class: IP 68
- Pressure connection: Rp 6

Equipment/function
- Multistage submersible-motor pump with semi-axial impellers
- Integrated non-return valve, spring-mounted
- NEMA coupling up to 8" motor connection, standardised connection for 10" motor and larger
- Three-phase motor
- Hermetically cast motors
- Rewindable motors

Materials
- Hydraulic housing: Stainless steel 1.4301
- Impellers: Stainless steel 1.4301
- Hydraulics shaft: Stainless steel 1.4057
- Motor housing: EN-GJL or stainless steel 1.4301
- Motor shaft: Stainless steel 1.4542 or 1.4462 (depending on type)

Description/design
Submersible pump for vertical or horizontal installation.

Hydraulics
Multistage submersible pump with 6/8"-NEMA- or from 10" and larger with standardised connection and semi-axial impellers in sectional construction. Integrated non-return valve. All parts in contact with the fluid are made of corrosion-free materials.

Motor
Three-phase motor for direct or star-delta starting Sealed, hermetically cast motor, resin-impregnated, with enamel-insulated winding or rewindable motor with PVC-insulated winding, self-lubricating bearing, with water-glycol filling. Motors of the NU 611, NU 8..., NU 9... series are also available in potable water version (T version).

Raw water intake

Single pumps

Series description Wilo-Sub TWI 10-..-A

Cooling
The motor is cooled by the fluid. The motor must always be operated in submerged state. The limit values for the maximum fluid temperature and the minimum flow rate must not be exceeded. Vertical installation is possible optionally with or without cooling jacket. Cooling jacket is required for horizontal installation.

Pressure shroud
The pressure shroud is used for direct installation of the unit in the pipe system. Standard models are without mounted non-return valves. The maximum inlet pressure is 10 bar.

Options
- Hydraulics in 1.4401 stainless steel
- Motor in stainless steel 1.4401, 1.4571 or G-CuSn10
- 60 Hz version
- Star/delta starting
- Rewindable motor
- Rewindable motor with potable water filling as special version

Scope of delivery
- Hydraulics + motor fully assembled
- Connecting cable approved for potable water, cable cross-section and length per standard design or per customer request
- Installation and operating instructions

Accessories
- Cooling jacket pipes
- Pressure shroud
- Cable kits for potable water and process water
- Switchgears

Configuration
- No suction mode is possible with these units!
- The unit must be fully immersed in water during operation.

Pump curves

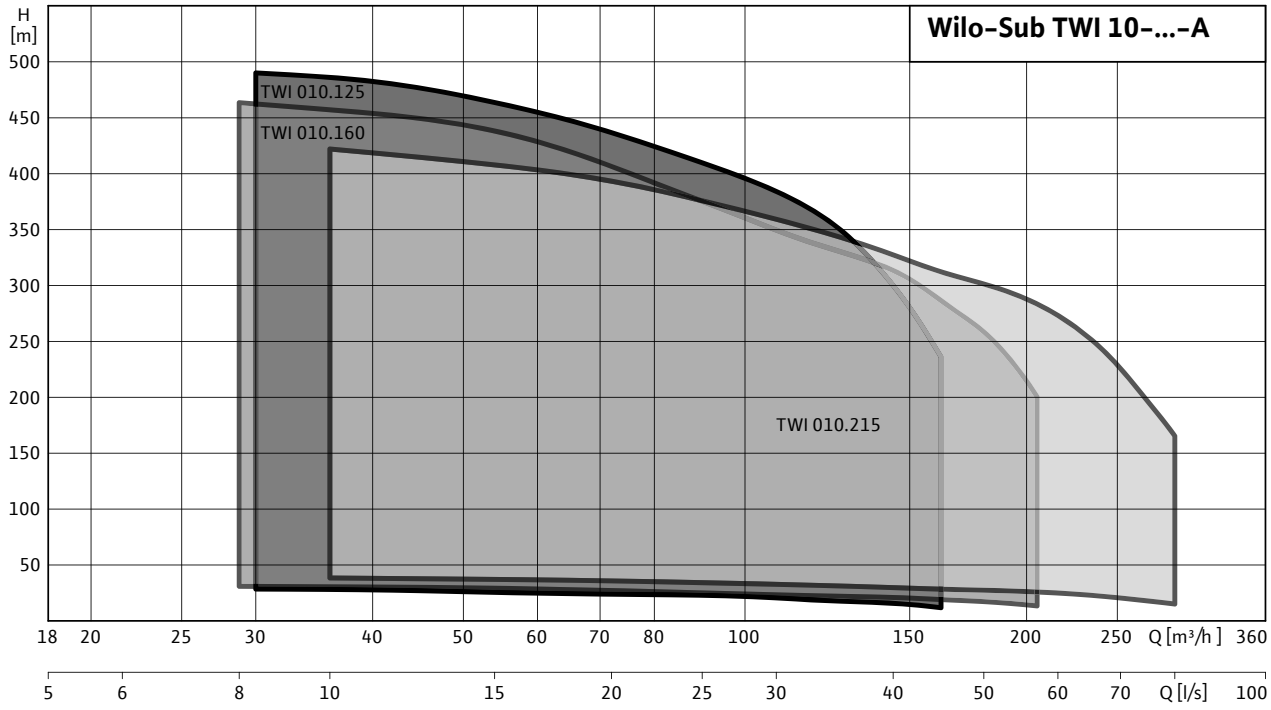

Technical data Wilo-Sub TWI 10-..-A

Wilo-Sub...	Type of motor	Max. volume flow	Max. delivery head	Fluid temperature	Min. flow rate at the motor	Insulation class	Max. immersion depth
		Q_{max}	H_{max}	T	v		
		m^3/h	m	°C	m/s		m
TWI 010.125-01-A	NU 501-2/11	160	29	+3...+30	0.16	F	350
TWI 010.125-01-A	NU 611-2/11	160	29	+3...+30	0.5	80°C	100
TWI 010.125-02-A	NU 501-2/22	160	58	+3...+30	0.16	F	350
TWI 010.125-02-A	NU 611-2/22	160	58	+3...+30	0.5	80°C	100
TWI 010.125-03-A	NU 501-2/30	160	86	+3...+30	0.16	F	350
TWI 010.125-03-A	NU 611-2/30	160	86	+3...+30	0.5	80°C	100
TWI 010.125-04-A	NU 501-2/37	160	115	+3...+30	0.16	F	350
TWI 010.125-04-A	NU 611-2/37	160	115	+3...+30	0.5	80°C	100
TWI 010.125-04-A	NU 701-2/37	160	115	+3...+30	0.16	F	300
TWI 010.125-04-A	NU 801-2/45	160	115	+3...+20	0.1	80°C	300
TWI 010.125-05-A	NU 701-2/55	160	144	+3...+30	0.16	F	300
TWI 010.125-05-A	NU 801-2/68	160	144	+3...+20	0.1	80°C	300
TWI 010.125-06-A	NU 701-2/75	160	173	+3...+30	0.16	F	300
TWI 010.125-06-A	NU 801-2/75	160	173	+3...+20	0.1	80°C	300
TWI 010.125-07-A	NU 701-2/75	160	203	+3...+30	0.16	F	300
TWI 010.125-07-A	NU 801-2/87	160	203	+3...+20	0.1	80°C	300
TWI 010.125-07-A	NU 911-2/45	160	203	+3...+20	0.1	80°C	300
TWI 010.125-01-A	NU 611-2/11	160	29	+3...+30	0.5	80°C	100
TWI 010.125-02-A	NU 501-2/22	160	58	+3...+30	0.16	F	350
TWI 010.125-02-A	NU 611-2/22	160	58	+3...+30	0.5	80°C	100
TWI 010.125-03-A	NU 501-2/30	160	86	+3...+30	0.16	F	350
TWI 010.125-03-A	NU 611-2/30	160	86	+3...+30	0.5	80°C	100
TWI 010.125-04-A	NU 501-2/37	160	115	+3...+30	0.16	F	350
TWI 010.125-04-A	NU 611-2/37	160	115	+3...+30	0.5	80°C	100
TWI 010.125-04-A	NU 701-2/37	160	115	+3...+30	0.16	F	300
TWI 010.125-04-A	NU 801-2/45	160	115	+3...+20	0.1	80°C	300
TWI 010.125-05-A	NU 701-2/55	160	144	+3...+30	0.16	F	300
TWI 010.125-05-A	NU 801-2/68	160	144	+3...+20	0.1	80°C	300
TWI 010.125-06-A	NU 701-2/75	160	173	+3...+30	0.16	F	300
TWI 010.125-06-A	NU 801-2/75	160	173	+3...+20	0.1	80°C	300
TWI 010.125-07-A	NU 701-2/75	160	203	+3...+30	0.16	F	300
TWI 010.125-07-A	NU 801-2/87	160	203	+3...+20	0.1	80°C	300
TWI 010.125-07-A	NU 911-2/45	160	203	+3...+20	0.1	80°C	300
TWI 010.125-08-A	NU 701-2/75	160	232	+3...+30	0.16	F	300
TWI 010.125-08-A	NU 801-2/87	160	232	+3...+20	0.1	80°C	300
TWI 010.125-08-A	NU 911-2/45	160	232	+3...+20	0.1	80°C	300
TWI 010.125-09-A	NU 701-2/93	160	262	+3...+30	0.16	F	300
TWI 010.125-09-A	NU 811-2/90	160	262	+3...+20	0.5	80°C	100
TWI 010.125-09-A	NU 911-2/50	160	262	+3...+20	0.1	80°C	300
TWI 010.125-10-A	NU 701-2/93	160	290	+3...+30	0.16	F	300
TWI 010.125-10-A	NU 811-2/95	160	290	+3...+20	0.5	80°C	100
TWI 010.125-10-A	NU 911-2/60	160	290	+3...+20	0.1	80°C	300
TWI 010.125-11-A	NU 701-2/110	160	320	+3...+30	0.16	F	300
TWI 010.125-11-A	NU 811-2/75	160	320	+3...+20	0.5	80°C	100
TWI 010.125-11-A	NU 911-2/60	160	320	+3...+20	0.1	80°C	300
TWI 010.125-12-A	NU 911-2/60	160	355	+3...+20	0.1	80°C	300

Raw water intake

Single pumps

Technical data Wilo-Sub TWI 10-..-A

Wilo-Sub...	Type of motor	Max. volume flow	Max. delivery head	Fluid temperature	Min. flow rate at the motor	Insulation class	Max. immersion depth
		Q_{max}	H_{max}	T	v		
		m^3/h	m	°C	m/s		m
TWI 010.125-13-A	NU 911-2/75	160	380	+3...+20	0.1	80°C	300
TWI 010.125-14-A	NU 911-2/75	160	415	+3...+20	0.1	80°C	300
TWI 010.125-15-A	NU 911-2/75	160	445	+3...+20	0.1	80°C	300
TWI 010.125-16-A	NU 911-2/90	160	475	+3...+20	0.1	80°C	300
TWI 010.125-17-A	NU 911-2/90	160	505	+3...+20	0.1	80°C	300
TWI 010.125-08-A	NU 701-2/75	160	232	+3...+30	0.16	F	300
TWI 010.125-08-A	NU 801-2/87	160	232	+3...+20	0.1	80°C	300
TWI 010.125-08-A	NU 911-2/45	160	232	+3...+20	0.1	80°C	300
TWI 010.125-09-A	NU 701-2/93	160	262	+3...+30	0.16	F	300
TWI 010.125-09-A	NU 811-2/90	160	262	+3...+20	0.5	80°C	100
TWI 010.125-09-A	NU 911-2/50	160	262	+3...+20	0.1	80°C	300
TWI 010.125-10-A	NU 701-2/93	160	290	+3...+30	0.16	F	300
TWI 010.125-10-A	NU 811-2/95	160	290	+3...+20	0.5	80°C	100
TWI 010.125-10-A	NU 911-2/60	160	290	+3...+20	0.1	80°C	300
TWI 010.125-11-A	NU 701-2/110	160	320	+3...+30	0.16	F	300
TWI 010.125-11-A	NU 811-2/75	160	320	+3...+20	0.5	80°C	100
TWI 010.125-11-A	NU 911-2/60	160	320	+3...+20	0.1	80°C	300
TWI 010.125-12-A	NU 911-2/60	160	355	+3...+20	0.1	80°C	300
TWI 010.125-13-A	NU 911-2/75	160	380	+3...+20	0.1	80°C	300
TWI 010.125-14-A	NU 911-2/75	160	415	+3...+20	0.1	80°C	300
TWI 010.125-15-A	NU 911-2/75	160	445	+3...+20	0.1	80°C	300
TWI 010.125-16-A	NU 911-2/90	160	475	+3...+20	0.1	80°C	300
TWI 010.125-17-A	NU 911-2/90	160	505	+3...+20	0.1	80°C	300
TWI 010.160-01-A	NU 501-2/15	210	32	+3...+30	0.16	F	350
TWI 010.160-01-A	NU 611-2/13	210	32	+3...+30	0.5	80°C	100
TWI 010.160-02-A	NU 501-2/30	210	64	+3...+30	0.16	F	350
TWI 010.160-02-A	NU 611-2/26	210	64	+3...+30	0.5	80°C	100
TWI 010.160-03-A	NU 501-2/37	210	96	+3...+30	0.16	F	350
TWI 010.160-03-A	NU 611-2/37	210	96	+3...+30	0.5	80°C	100
TWI 010.160-04-A	NU 701-2/55	210	128	+3...+30	0.16	F	350
TWI 010.160-04-A	NU 801-2/60	210	128	+3...+20	0.1	80°C	300
TWI 010.160-05-A	NU 701-2/75	210	161	+3...+30	0.16	F	350
TWI 010.160-05-A	NU 801-2/75	210	161	+3...+20	0.1	80°C	300
TWI 010.160-06-A	NU 701-2/75	210	193	+3...+30	0.16	F	350
TWI 010.160-06-A	NU 801-2/87	210	193	+3...+20	0.1	80°C	300
TWI 010.160-01-A	NU 501-2/15	210	32	+3...+30	0.16	F	350
TWI 010.160-01-A	NU 611-2/13	210	32	+3...+30	0.5	80°C	100
TWI 010.160-02-A	NU 501-2/30	210	64	+3...+30	0.16	F	350
TWI 010.160-02-A	NU 611-2/26	210	64	+3...+30	0.5	80°C	100
TWI 010.160-03-A	NU 501-2/37	210	96	+3...+30	0.16	F	350
TWI 010.160-03-A	NU 611-2/37	210	96	+3...+30	0.5	80°C	100
TWI 010.160-04-A	NU 701-2/55	210	128	+3...+30	0.16	F	350
TWI 010.160-04-A	NU 801-2/60	210	128	+3...+20	0.1	80°C	300
TWI 010.160-05-A	NU 701-2/75	210	161	+3...+30	0.16	F	350
TWI 010.160-05-A	NU 801-2/75	210	161	+3...+20	0.1	80°C	300
TWI 010.160-06-A	NU 701-2/75	210	193	+3...+30	0.16	F	350

Technical data Wilo-Sub TWI 10-..-A

Wilo-Sub...	Type of motor	Max. volume flow	Max. delivery head	Fluid temperature	Min. flow rate at the motor	Insulation class	Max. immersion depth
		Q_{max}	H_{max}	T	v		
		m^3/h	m	°C	m/s		m
TWI 010.160-06-A	NU 801-2/87	210	193	+3...+20	0.1	80°C	300
TWI 010.160-07-A	NU 701-2/93	210	225	+3...+30	0.16	F	350
TWI 010.160-07-A	NU 811-2/90	210	225	+3...+20	0.5	80°C	100
TWI 010.160-08-A	NU 701-2/110	210	257	+3...+30	0.16	F	350
TWI 010.160-08-A	NU 811-2/95	210	257	+3...+20	0.5	80°C	100
TWI 010.160-09-A	NU 701-2/110	210	280	+3...+30	0.16	F	350
TWI 010.160-09-A	NU 811-2/95	210	280	+3...+20	0.5	80°C	100
TWI 010.160-10-A	NU 911-2/75	210	311	+3...+20	0.1	80°C	300
TWI 010.160-11-A	NU 911-2/75	210	342	+3...+20	0.1	80°C	300
TWI 010.160-12-A	NU 911-2/90	210	373	+3...+20	0.1	80°C	300
TWI 010.160-13-A	NU 911-2/90	210	404	+3...+20	0.1	80°C	300
TWI 010.160-14-A	NU 911-2/100	210	435	+3...+20	0.1	80°C	300
TWI 010.160-07-A	NU 701-2/93	210	225	+3...+30	0.16	F	350
TWI 010.160-07-A	NU 811-2/90	210	225	+3...+20	0.5	80°C	100
TWI 010.160-08-A	NU 701-2/110	210	257	+3...+30	0.16	F	350
TWI 010.160-08-A	NU 811-2/95	210	257	+3...+20	0.5	80°C	100
TWI 010.160-09-A	NU 701-2/110	210	280	+3...+30	0.16	F	350
TWI 010.160-09-A	NU 811-2/95	210	280	+3...+20	0.5	80°C	100
TWI 010.160-10-A	NU 911-2/75	210	311	+3...+20	0.1	80°C	300
TWI 010.160-11-A	NU 911-2/75	210	342	+3...+20	0.1	80°C	300
TWI 010.160-12-A	NU 911-2/90	210	373	+3...+20	0.1	80°C	300
TWI 010.160-13-A	NU 911-2/90	210	404	+3...+20	0.1	80°C	300
TWI 010.160-14-A	NU 911-2/100	210	435	+3...+20	0.1	80°C	300
TWI 010.215-01-A	NU 501-2/22	270	38	+3...+30	0.16	F	350
TWI 010.215-01-A	NU 611-2/22	270	38	+3...+30	0.5	80°C	100
TWI 010.215-02-A	NU 701-2/45	270	79	+3...+30	0.16	F	350
TWI 010.215-02-A	NU 801-2/55	270	79	+3...+20	0.1	80°C	300
TWI 010.215-03-A	NU 701-2/75	270	118	+3...+30	0.16	F	350
TWI 010.215-03-A	NU 801-2/75	270	118	+3...+20	0.1	80°C	300
TWI 010.215-04-A	NU 701-2/75	270	157	+3...+30	0.16	F	350
TWI 010.215-04-A	NU 801-2/87	270	157	+3...+20	0.1	80°C	300
TWI 010.215-05-A	NU 701-2/93	270	195	+3...+30	0.16	F	350
TWI 010.215-05-A	NU 811-2/95	270	195	+3...+20	0.5	80°C	100
TWI 010.215-06-A	NU 701-2/110	270	235	+3...+30	0.16	F	350
TWI 010.215-06-A	NU 811-2/95	270	235	+3...+20	0.5	80°C	100
TWI 010.215-01-A	NU 501-2/22	270	38	+3...+30	0.16	F	350
TWI 010.215-01-A	NU 611-2/22	270	38	+3...+30	0.5	80°C	100
TWI 010.215-02-A	NU 701-2/45	270	79	+3...+30	0.16	F	350
TWI 010.215-02-A	NU 801-2/55	270	79	+3...+20	0.1	80°C	300
TWI 010.215-03-A	NU 701-2/75	270	118	+3...+30	0.16	F	350
TWI 010.215-03-A	NU 801-2/75	270	118	+3...+20	0.1	80°C	300
TWI 010.215-04-A	NU 701-2/75	270	157	+3...+30	0.16	F	350
TWI 010.215-04-A	NU 801-2/87	270	157	+3...+20	0.1	80°C	300
TWI 010.215-05-A	NU 701-2/93	270	195	+3...+30	0.16	F	350
TWI 010.215-05-A	NU 811-2/95	270	195	+3...+20	0.5	80°C	100
TWI 010.215-06-A	NU 701-2/110	270	235	+3...+30	0.16	F	350

Raw water intake

Single pumps

Technical data Wilo-Sub TWI 10-..-A

Wilo-Sub...	Type of motor	Max. volume flow	Max. delivery head	Fluid temperature	Min. flow rate at the motor	Insulation class	Max. immersion depth
		Q_{max}	H_{max}	T	v		
		m^3/h	m	°C	m/s		m
TWI 010.215-06-A	NU 811-2/95	270	235	+3...+20	0.5	80°C	100
TWI 010.215-07-A	NU 911-2/75	270	274	+3...+20	0.1	80°C	300
TWI 010.215-08-A	NU 911-2/90	270	316	+3...+20	0.1	80°C	300
TWI 010.215-09-A	NU 911-2/90	270	355	+3...+20	0.1	80°C	300
TWI 010.215-10-A	NU 122-2/75	270	394	+3...+20	0.1	80°C	300
TWI 010.215-11-A	NU 122-2/90	270	434	+3...+20	0.1	80°C	300
TWI 010.215-07-A	NU 911-2/75	270	274	+3...+20	0.1	80°C	300
TWI 010.215-08-A	NU 911-2/90	270	316	+3...+20	0.1	80°C	300
TWI 010.215-09-A	NU 911-2/90	270	355	+3...+20	0.1	80°C	300
TWI 010.215-10-A	NU 122-2/75	270	394	+3...+20	0.1	80°C	300
TWI 010.215-11-A	NU 122-2/90	270	434	+3...+20	0.1	80°C	300

Voltage tolerance +/- 10 % (specifications according to DIN EN 60034)

Materials

Wilo-Sub...	Impeller	Pump housing	Pump shaft	Motor housing	Motor shaft
TWI 010.125-01-A	1.4301	1.4301	1.4057	EN-GJL	1.4305
TWI 010.125-01-A	1.4301	1.4301	1.4057	1.4301	1.4301
TWI 010.125-02-A	1.4301	1.4301	1.4057	EN-GJL	1.4305
TWI 010.125-02-A	1.4301	1.4301	1.4057	1.4301	1.4301
TWI 010.125-03-A	1.4301	1.4301	1.4057	EN-GJL	1.4305
TWI 010.125-03-A	1.4301	1.4301	1.4057	1.4301	1.4301
TWI 010.125-04-A	1.4301	1.4301	1.4057	EN-GJL	1.4305
TWI 010.125-04-A	1.4301	1.4301	1.4057	1.4301	1.4301
TWI 010.125-04-A	1.4301	1.4301	1.4057	EN-GJL	1.4305
TWI 010.125-04-A	1.4301	1.4301	1.4057	EN-GJL	1.4021
TWI 010.125-05-A	1.4301	1.4301	1.4057	EN-GJL	1.4305
TWI 010.125-05-A	1.4301	1.4301	1.4057	EN-GJL	1.4021
TWI 010.125-06-A	1.4301	1.4301	1.4057	EN-GJL	1.4305
TWI 010.125-06-A	1.4301	1.4301	1.4057	EN-GJL	1.4021
TWI 010.125-07-A	1.4301	1.4301	1.4057	EN-GJL	1.4305
TWI 010.125-07-A	1.4301	1.4301	1.4057	EN-GJL	1.4021
TWI 010.125-07-A	1.4301	1.4301	1.4057	EN-GJL	1.4462
TWI 010.125-01-A	1.4301	1.4301	1.4057	1.4301	1.4301
TWI 010.125-02-A	1.4301	1.4301	1.4057	EN-GJL	1.4305
TWI 010.125-02-A	1.4301	1.4301	1.4057	1.4301	1.4301
TWI 010.125-03-A	1.4301	1.4301	1.4057	EN-GJL	1.4305
TWI 010.125-03-A	1.4301	1.4301	1.4057	1.4301	1.4301
TWI 010.125-04-A	1.4301	1.4301	1.4057	EN-GJL	1.4305
TWI 010.125-04-A	1.4301	1.4301	1.4057	1.4301	1.4301
TWI 010.125-04-A	1.4301	1.4301	1.4057	EN-GJL	1.4305
TWI 010.125-04-A	1.4301	1.4301	1.4057	EN-GJL	1.4021
TWI 010.125-05-A	1.4301	1.4301	1.4057	EN-GJL	1.4305
TWI 010.125-05-A	1.4301	1.4301	1.4057	EN-GJL	1.4021
TWI 010.125-06-A	1.4301	1.4301	1.4057	EN-GJL	1.4305
TWI 010.125-06-A	1.4301	1.4301	1.4057	EN-GJL	1.4021
TWI 010.125-07-A	1.4301	1.4301	1.4057	EN-GJL	1.4305
TWI 010.125-07-A	1.4301	1.4301	1.4057	EN-GJL	1.4021
TWI 010.125-07-A	1.4301	1.4301	1.4057	EN-GJL	1.4462
TWI 010.125-08-A	1.4301	1.4301	1.4057	EN-GJL	1.4305
TWI 010.125-08-A	1.4301	1.4301	1.4057	EN-GJL	1.4021
TWI 010.125-08-A	1.4301	1.4301	1.4057	EN-GJL	1.4462
TWI 010.125-09-A	1.4301	1.4301	1.4057	EN-GJL	1.4305
TWI 010.125-09-A	1.4301	1.4301	1.4057	EN-GJL	1.4301
TWI 010.125-09-A	1.4301	1.4301	1.4057	EN-GJL	1.4462
TWI 010.125-10-A	1.4301	1.4301	1.4057	EN-GJL	1.4305
TWI 010.125-10-A	1.4301	1.4301	1.4057	EN-GJL	1.4301
TWI 010.125-10-A	1.4301	1.4301	1.4057	EN-GJL	1.4462
TWI 010.125-11-A	1.4301	1.4301	1.4057	EN-GJL	1.4305
TWI 010.125-11-A	1.4301	1.4301	1.4057	EN-GJL	1.4301
TWI 010.125-11-A	1.4301	1.4301	1.4057	EN-GJL	1.4462
TWI 010.125-12-A	1.4301	1.4301	1.4057	EN-GJL	1.4462
TWI 010.125-13-A	1.4301	1.4301	1.4057	EN-GJL	1.4462

Raw water intake

Single pumps

Materials

Wilo-Sub...	Impeller	Pump housing	Pump shaft	Motor housing	Motor shaft
TWI 010.125-14-A	1.4301	1.4301	1.4057	EN-GJL	1.4462
TWI 010.125-15-A	1.4301	1.4301	1.4057	EN-GJL	1.4462
TWI 010.125-16-A	1.4301	1.4301	1.4057	EN-GJL	1.4462
TWI 010.125-17-A	1.4301	1.4301	1.4057	EN-GJL	1.4462
TWI 010.125-08-A	1.4301	1.4301	1.4057	EN-GJL	1.4305
TWI 010.125-08-A	1.4301	1.4301	1.4057	EN-GJL	1.4021
TWI 010.125-08-A	1.4301	1.4301	1.4057	EN-GJL	1.4462
TWI 010.125-09-A	1.4301	1.4301	1.4057	EN-GJL	1.4305
TWI 010.125-09-A	1.4301	1.4301	1.4057	EN-GJL	1.4301
TWI 010.125-09-A	1.4301	1.4301	1.4057	EN-GJL	1.4462
TWI 010.125-10-A	1.4301	1.4301	1.4057	EN-GJL	1.4305
TWI 010.125-10-A	1.4301	1.4301	1.4057	EN-GJL	1.4301
TWI 010.125-10-A	1.4301	1.4301	1.4057	EN-GJL	1.4462
TWI 010.125-11-A	1.4301	1.4301	1.4057	EN-GJL	1.4305
TWI 010.125-11-A	1.4301	1.4301	1.4057	EN-GJL	1.4301
TWI 010.125-11-A	1.4301	1.4301	1.4057	EN-GJL	1.4462
TWI 010.125-12-A	1.4301	1.4301	1.4057	EN-GJL	1.4462
TWI 010.125-13-A	1.4301	1.4301	1.4057	EN-GJL	1.4462
TWI 010.125-14-A	1.4301	1.4301	1.4057	EN-GJL	1.4462
TWI 010.125-15-A	1.4301	1.4301	1.4057	EN-GJL	1.4462
TWI 010.125-16-A	1.4301	1.4301	1.4057	EN-GJL	1.4462
TWI 010.125-17-A	1.4301	1.4301	1.4057	EN-GJL	1.4462
TWI 010.160-01-A	1.4301	1.4301	1.4057	EN-GJL	1.4305
TWI 010.160-01-A	1.4301	1.4301	1.4057	1.4301	1.4301
TWI 010.160-02-A	1.4301	1.4301	1.4057	EN-GJL	1.4305
TWI 010.160-02-A	1.4301	1.4301	1.4057	1.4301	1.4301
TWI 010.160-03-A	1.4301	1.4301	1.4057	EN-GJL	1.4305
TWI 010.160-03-A	1.4301	1.4301	1.4057	1.4301	1.4301
TWI 010.160-04-A	1.4301	1.4301	1.4057	EN-GJL	1.4305
TWI 010.160-04-A	1.4301	1.4301	1.4057	EN-GJL	1.4021
TWI 010.160-05-A	1.4301	1.4301	1.4057	EN-GJL	1.4305
TWI 010.160-05-A	1.4301	1.4301	1.4057	EN-GJL	1.4021
TWI 010.160-06-A	1.4301	1.4301	1.4057	EN-GJL	1.4305
TWI 010.160-06-A	1.4301	1.4301	1.4057	EN-GJL	1.4021
TWI 010.160-01-A	1.4301	1.4301	1.4057	EN-GJL	1.4305
TWI 010.160-01-A	1.4301	1.4301	1.4057	1.4301	1.4301
TWI 010.160-02-A	1.4301	1.4301	1.4057	EN-GJL	1.4305
TWI 010.160-02-A	1.4301	1.4301	1.4057	1.4301	1.4301
TWI 010.160-03-A	1.4301	1.4301	1.4057	EN-GJL	1.4305
TWI 010.160-03-A	1.4301	1.4301	1.4057	1.4301	1.4301
TWI 010.160-04-A	1.4301	1.4301	1.4057	EN-GJL	1.4305
TWI 010.160-04-A	1.4301	1.4301	1.4057	EN-GJL	1.4021
TWI 010.160-05-A	1.4301	1.4301	1.4057	EN-GJL	1.4305
TWI 010.160-05-A	1.4301	1.4301	1.4057	EN-GJL	1.4021
TWI 010.160-06-A	1.4301	1.4301	1.4057	EN-GJL	1.4305
TWI 010.160-06-A	1.4301	1.4301	1.4057	EN-GJL	1.4021
TWI 010.160-07-A	1.4301	1.4301	1.4057	EN-GJL	1.4305

Materials

Wilo-Sub...	Impeller	Pump housing	Pump shaft	Motor housing	Motor shaft
TWI 010.160-07-A	1.4301	1.4301	1.4057	EN-GJL	1.4301
TWI 010.160-08-A	1.4301	1.4301	1.4057	EN-GJL	1.4305
TWI 010.160-08-A	1.4301	1.4301	1.4057	EN-GJL	1.4301
TWI 010.160-09-A	1.4301	1.4301	1.4057	EN-GJL	1.4305
TWI 010.160-09-A	1.4301	1.4301	1.4057	EN-GJL	1.4301
TWI 010.160-10-A	1.4301	1.4301	1.4057	EN-GJL	1.4462
TWI 010.160-11-A	1.4301	1.4301	1.4057	EN-GJL	1.4462
TWI 010.160-12-A	1.4301	1.4301	1.4057	EN-GJL	1.4462
TWI 010.160-13-A	1.4301	1.4301	1.4057	EN-GJL	1.4462
TWI 010.160-14-A	1.4301	1.4301	1.4057	EN-GJL	1.4462
TWI 010.160-07-A	1.4301	1.4301	1.4057	EN-GJL	1.4305
TWI 010.160-07-A	1.4301	1.4301	1.4057	EN-GJL	1.4301
TWI 010.160-08-A	1.4301	1.4301	1.4057	EN-GJL	1.4305
TWI 010.160-08-A	1.4301	1.4301	1.4057	EN-GJL	1.4301
TWI 010.160-09-A	1.4301	1.4301	1.4057	EN-GJL	1.4305
TWI 010.160-09-A	1.4301	1.4301	1.4057	EN-GJL	1.4301
TWI 010.160-10-A	1.4301	1.4301	1.4057	EN-GJL	1.4462
TWI 010.160-11-A	1.4301	1.4301	1.4057	EN-GJL	1.4462
TWI 010.160-12-A	1.4301	1.4301	1.4057	EN-GJL	1.4462
TWI 010.160-13-A	1.4301	1.4301	1.4057	EN-GJL	1.4462
TWI 010.160-14-A	1.4301	1.4301	1.4057	EN-GJL	1.4462
TWI 010.215-01-A	1.4301	1.4301	1.4057	EN-GJL	1.4305
TWI 010.215-01-A	1.4301	1.4301	1.4057	1.4301	1.4301
TWI 010.215-02-A	1.4301	1.4301	1.4057	EN-GJL	1.4305
TWI 010.215-02-A	1.4301	1.4301	1.4057	EN-GJL	1.4021
TWI 010.215-03-A	1.4301	1.4301	1.4057	EN-GJL	1.4305
TWI 010.215-03-A	1.4301	1.4301	1.4057	EN-GJL	1.4021
TWI 010.215-04-A	1.4301	1.4301	1.4057	EN-GJL	1.4305
TWI 010.215-04-A	1.4301	1.4301	1.4057	EN-GJL	1.4021
TWI 010.215-05-A	1.4301	1.4301	1.4057	EN-GJL	1.4305
TWI 010.215-05-A	1.4301	1.4301	1.4057	EN-GJL	1.4301
TWI 010.215-06-A	1.4301	1.4301	1.4057	EN-GJL	1.4305
TWI 010.215-06-A	1.4301	1.4301	1.4057	EN-GJL	1.4301
TWI 010.215-01-A	1.4301	1.4301	1.4057	EN-GJL	1.4305
TWI 010.215-01-A	1.4301	1.4301	1.4057	1.4301	1.4301
TWI 010.215-02-A	1.4301	1.4301	1.4057	EN-GJL	1.4305
TWI 010.215-02-A	1.4301	1.4301	1.4057	EN-GJL	1.4021
TWI 010.215-03-A	1.4301	1.4301	1.4057	EN-GJL	1.4305
TWI 010.215-03-A	1.4301	1.4301	1.4057	EN-GJL	1.4021
TWI 010.215-04-A	1.4301	1.4301	1.4057	EN-GJL	1.4305
TWI 010.215-04-A	1.4301	1.4301	1.4057	EN-GJL	1.4021
TWI 010.215-05-A	1.4301	1.4301	1.4057	EN-GJL	1.4305
TWI 010.215-05-A	1.4301	1.4301	1.4057	EN-GJL	1.4301
TWI 010.215-06-A	1.4301	1.4301	1.4057	EN-GJL	1.4305
TWI 010.215-06-A	1.4301	1.4301	1.4057	EN-GJL	1.4301
TWI 010.215-07-A	1.4301	1.4301	1.4057	EN-GJL	1.4462
TWI 010.215-08-A	1.4301	1.4301	1.4057	EN-GJL	1.4462

Raw water intake

Single pumps

Materials

Wilo-Sub...	Impeller	Pump housing	Pump shaft	Motor housing	Motor shaft
TWI 010.215-09-A	1.4301	1.4301	1.4057	EN-GJL	1.4462
TWI 010.215-10-A	1.4301	1.4301	1.4057	EN-GJL	1.4462
TWI 010.215-11-A	1.4301	1.4301	1.4057	EN-GJL	1.4462
TWI 010.215-07-A	1.4301	1.4301	1.4057	EN-GJL	1.4462
TWI 010.215-08-A	1.4301	1.4301	1.4057	EN-GJL	1.4462
TWI 010.215-09-A	1.4301	1.4301	1.4057	EN-GJL	1.4462
TWI 010.215-10-A	1.4301	1.4301	1.4057	EN-GJL	1.4462
TWI 010.215-11-A	1.4301	1.4301	1.4057	EN-GJL	1.4462

Wilo-Sub TWI 10.125..-A

Pump curves Wilo-Sub TWI 10.125..-A

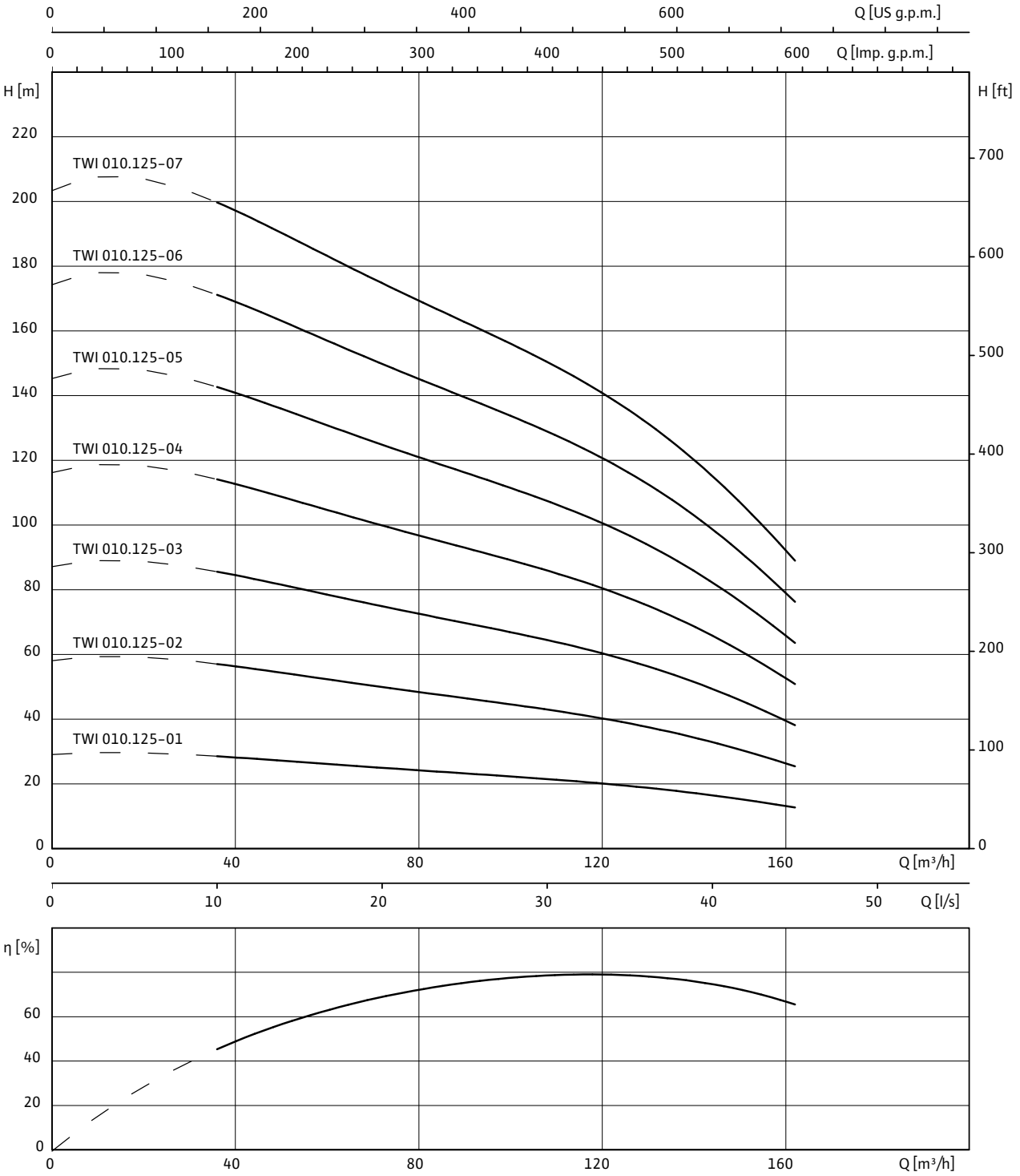

3~400 V, 50 Hz, p = 1 kg/dm^3, ν = 1x10^{-6} m^2/s, ISO 9906 Annex A, η = pump efficiency

Wilo-Sub TWI 10.125..-A

Motor data					
Wilo-Sub...	**Type of motor**	**Motor diameter**	**Mains connection**	**Nominal motor power**	**Nominal current**
		Ø		P_2	I_N
		"		kW	A
TWI 010.125-01-A	NU 501-2/11	6	3~400 V, 50 Hz	11	23.5
TWI 010.125-01-A	NU 611-2/11	6	3~400 V, 50 Hz	11	23.5
TWI 010.125-02-A	NU 501-2/22	6	3~400 V, 50 Hz	22	44.5
TWI 010.125-02-A	NU 611-2/22	6	3~400 V, 50 Hz	22	47.5
TWI 010.125-03-A	NU 501-2/30	6	3~400 V, 50 Hz	30	63
TWI 010.125-03-A	NU 611-2/30	6	3~400 V, 50 Hz	30	63
TWI 010.125-04-A	NU 501-2/37	6	3~400 V, 50 Hz	37	73
TWI 010.125-04-A	NU 611-2/37	6	3~400 V, 50 Hz	37	77
TWI 010.125-04-A	NU 701-2/37	8	3~400 V, 50 Hz	37	72
TWI 010.125-04-A	NU 801-2/45	8	3~400 V, 50 Hz	37	74
TWI 010.125-05-A	NU 701-2/55	8	3~400 V, 50 Hz	55	104
TWI 010.125-05-A	NU 801-2/68	8	3~400 V, 50 Hz	59	113
TWI 010.125-06-A	NU 701-2/75	8	3~400 V, 50 Hz	75	144
TWI 010.125-06-A	NU 801-2/75	8	3~400 V, 50 Hz	65	129
TWI 010.125-07-A	NU 701-2/75	8	3~400 V, 50 Hz	75	144
TWI 010.125-07-A	NU 801-2/87	8	3~400 V, 50 Hz	75	145
TWI 010.125-07-A	NU 911-2/45	10	3~400 V, 50 Hz	75	149

Flange dimensions									
Wilo-Sub...	**Connection**			**Pressure class**			**Dimensions**		
	DN1	*DN2*	*DN3*	PN_1	PN_2	PN_3	*D2*	*K*	*D*
	mm			bar			mm		
TWI 010...	Rp 6	–	–	10-64	–	–	–	–	–
TWI 010...	–	DN 100	–	–	10-16	–	8x18	180	220
TWI 010...	–	DN 100	–	–	25-40	–	8x22	190	235
TWI 010...	–	DN 125	DN 125	–	10-16	10	8x18	210	250
TWI 010...	–	DN 125	–	–	25-40	–	8x26	220	270
TWI 010...	–	DN 150	DN 150	–	10-16	10	8x22	240	285
TWI 010...	–	DN 150	–	–	25-40	–	8x26	250	300

Wilo-Sub TWI 10.125..-A

Dimension drawing

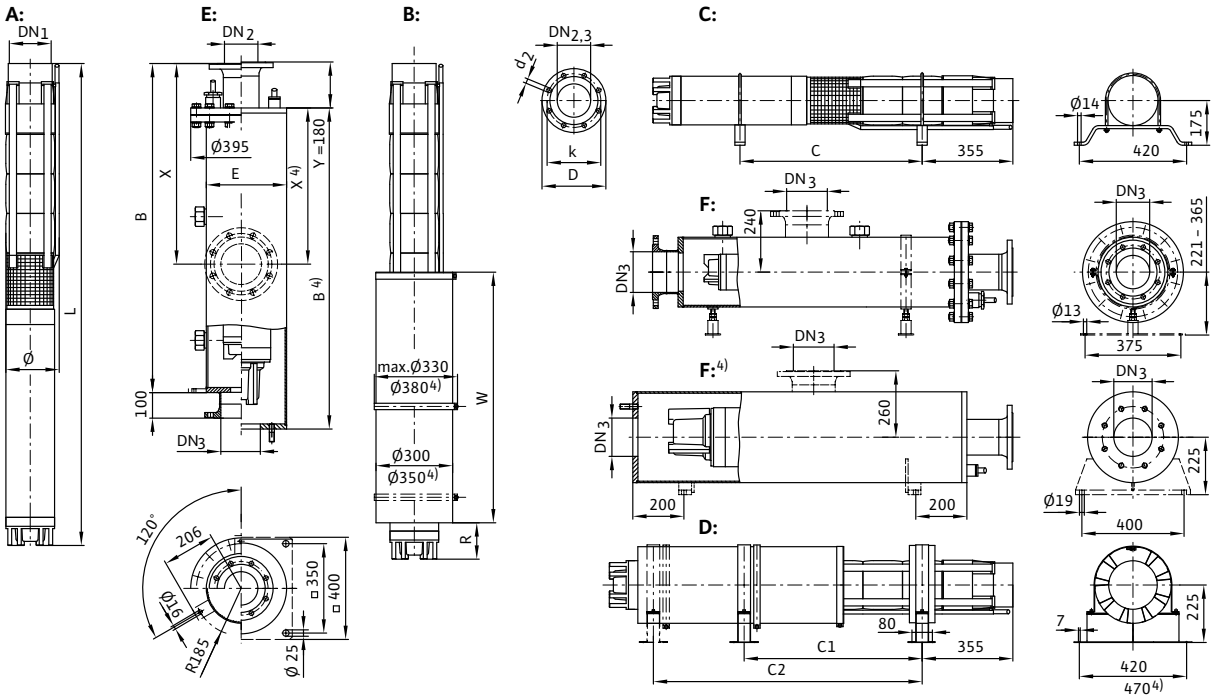

A = vertical, B = vertical with cooling jacket, C = horizontal, D = horizontal with cooling jacket, E = vertical with pressure shroud, F = horizontal with pressure shroud

Dimensions, weights

Wilo-Sub...	Type of motor	Dimensions									Weight		Installation
		B	*C*	*C1*	*C2*	*E*	*L*	*R*	*W*	*ø* 3)	*Jacket* 7)	*Unit*	
		mm									kg		
TWI 010.125-01-A	NU 501-2/11	1700	650	677	–	273	1363	101	920	218	108	80	A, B, C, D, E, F
TWI 010.125-01-A	NU 611-2/11	1700	720	750	–	273	1506	74	1090	218	108	89	A, B, C, D, E, F
TWI 010.125-02-A	NU 501-2/22	2000	900	930	–	273	1714	127	1090	218	116	105	A, B, C, D, E, F
TWI 010.125-02-A	NU 611-2/22	2000	990	1017	–	273	1886	109	1280	218	116	119	A, B, C, D, E, F
TWI 010.125-03-A	NU 501-2/30	2300	1136	1152	–	273	2000	67	1280	218	124	126	A, B, C, D, E, F
TWI 010.125-03-A	NU 611-2/30	2600	1240	1143	–	273	2222	169	1400	218	132	139	A, B, C, D, E, F
TWI 010.125-04-A	NU 501-2/37	2900	1470	1290	–	273	2523	94	1640	218	140	184	A, B, C, D, E, F
TWI 010.125-04-A	NU 611-2/37	2900	–	–	–	273	2507	59	1640	218	140	155	A, B, E
TWI 010.125-04-A	NU 701-2/37	2300	–	–	–	273	2104	107	1280	218	124	183	A, B, E
TWI 010.125-04-A	NU 801-2/45	2300	1290	1311	–	273	2163	75	1280	218	124	179	A, B, C, D, E, F
TWI 010.125-05-A	NU 701-2/55	2600	–	–	–	273	2478	114	1400	218	132	232	A, B, E
TWI 010.125-05-A	NU 801-2/68	2900	–	–	–	273	2549	185	1400	218	140	224	A, B, E
TWI 010.125-06-A	NU 701-2/75	1)	–	–	–	1)	2824	65	1640	227	1)	275	A, B, E
TWI 010.125-06-A	NU 801-2/75	2900	–	–	–	273	2774	85	1570	227	140	242	A, B, E
TWI 010.125-07-A	NU 701-2/75	1)	–	–	–	1)	2980	65	1640	227	1)	280	A, B, E
TWI 010.125-07-A	NU 801-2/87	1)	–	–	–	1)	3050	135	1640	227	1)	267	A, B, E
TWI 010.125-07-A	NU 911-2/45	1)	1990	1)	–	1)	2972	1)	1)	247	1)	315	A, B, C, D, E, F

1) On request, 3) For power cable in accordance with I_N, max. ø for threaded connection, 4) Only with cooling jacket, 7) Weight of pressure shroud

Wilo-Sub TWI 10.125..-A

Information for order placements					
Wilo-Sub...	**Type of motor**	🚚	**Art no.**	**Art. no. for cooling jacket pipe**	
				for vertical installation (B)	*for horizontal installation (D)*
TWI 010.125-01-A	NU 501-2/11	A	–	1)	1)
TWI 010.125-01-A	NU 611-2/11	A	–	1)	1)
TWI 010.125-02-A	NU 501-2/22	A	–	1)	1)
TWI 010.125-02-A	NU 611-2/22	A	–	1)	1)
TWI 010.125-03-A	NU 501-2/30	A	–	1)	1)
TWI 010.125-03-A	NU 611-2/30	A	–	1)	1)
TWI 010.125-04-A	NU 501-2/37	A	–	1)	1)
TWI 010.125-04-A	NU 611-2/37	A	–	1)	–
TWI 010.125-04-A	NU 701-2/37	A	–	1)	–
TWI 010.125-04-A	NU 801-2/45	A	–	1)	1)
TWI 010.125-05-A	NU 701-2/55	A	–	1)	–
TWI 010.125-05-A	NU 801-2/68	A	–	1)	–
TWI 010.125-06-A	NU 701-2/75	A	–	1)	–
TWI 010.125-06-A	NU 801-2/75	A	–	1)	–
TWI 010.125-07-A	NU 701-2/75	A	–	1)	–
TWI 010.125-07-A	NU 801-2/87	A	–	1)	–
TWI 010.125-07-A	NU 911-2/45	A	–	1)	1)

Motor efficiency based on 400 V, 50 Hz

Wilo-Sub TWI 10.125..-A

Pump curves Wilo-Sub TWI 10.125..-A

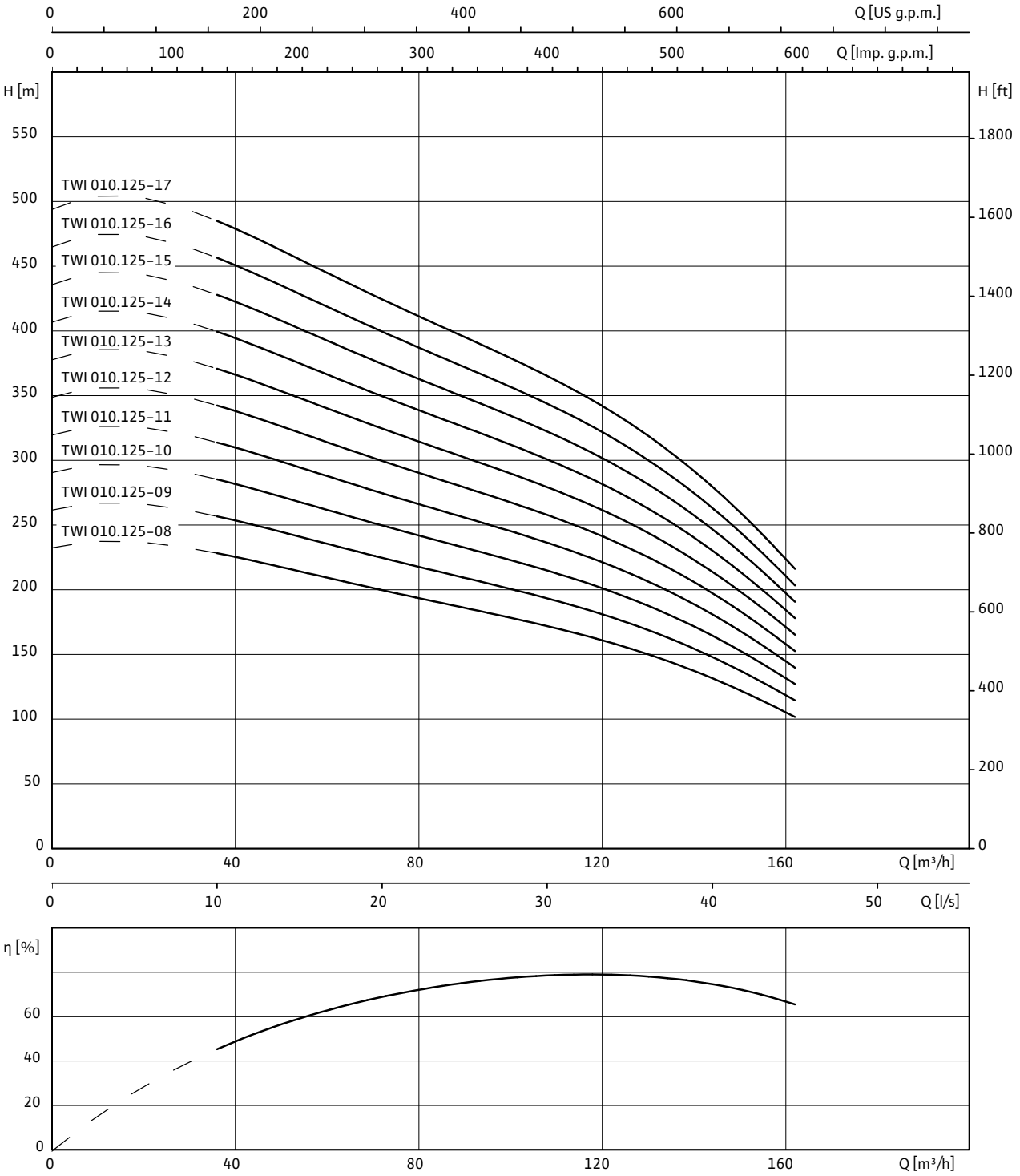

3~400 V, 50 Hz, p = 1 kg/dm^3, ν = 1x10^{-6} m^2/s, ISO 9906 Annex A, η = pump efficiency

Wilo-Sub TWI 10.125..-A

Motor data					
Wilo-Sub...	**Type of motor**	**Motor diameter**	**Mains connection**	**Nominal motor power**	**Nominal current**
		Ø		P_2	I_N
		"		kW	A
TWI 010.125-08-A	NU 701-2/75	8	3~400 V, 50 Hz	75	144
TWI 010.125-08-A	NU 801-2/87	8	3~400 V, 50 Hz	75	145
TWI 010.125-08-A	NU 911-2/45	10	3~400 V, 50 Hz	75	149
TWI 010.125-09-A	NU 701-2/93	8	3~400 V, 50 Hz	93	186
TWI 010.125-09-A	NU 811-2/90	8	3~400 V, 50 Hz	90	168
TWI 010.125-09-A	NU 911-2/50	10	3~400 V, 50 Hz	90	178
TWI 010.125-10-A	NU 701-2/93	8	3~400 V, 50 Hz	93	186
TWI 010.125-10-A	NU 811-2/95	8	3~400 V, 50 Hz	110	210
TWI 010.125-10-A	NU 911-2/60	10	3~400 V, 50 Hz	115	235
TWI 010.125-11-A	NU 701-2/110	8	3~400 V, 50 Hz	110	215
TWI 010.125-11-A	NU 811-2/75	8	3~400 V, 50 Hz	110	210
TWI 010.125-11-A	NU 911-2/60	10	3~400 V, 50 Hz	115	235
TWI 010.125-12-A	NU 911-2/60	10	3~400 V, 50 Hz	115	235
TWI 010.125-13-A	NU 911-2/75	10	3~400 V, 50 Hz	145	280
TWI 010.125-14-A	NU 911-2/75	10	3~400 V, 50 Hz	145	280
TWI 010.125-15-A	NU 911-2/75	10	3~400 V, 50 Hz	145	280
TWI 010.125-16-A	NU 911-2/90	10	3~400 V, 50 Hz	170	330
TWI 010.125-17-A	NU 911-2/90	10	3~400 V, 50 Hz	170	330

Flange dimensions									
Wilo-Sub...	**Connection**			**Pressure class**			**Dimensions**		
	DN1	*DN2*	*DN3*	PN_1	PN_2	PN_3	*D2*	*K*	*D*
	mm			bar			mm		
TWI 010...	Rp 6	–	–	10-64	–	–	–	–	–
TWI 010...	–	DN 100	–	–	10-16	–	8x18	180	220
TWI 010...	–	DN 100	–	–	25-40	–	8x22	190	235
TWI 010...	–	DN 125	DN 125	–	10-16	10	8x18	210	250
TWI 010...	–	DN 125	–	–	25-40	–	8x26	220	270
TWI 010...	–	DN 150	DN 150	–	10-16	10	8x22	240	285
TWI 010...	–	DN 150	–	–	25-40	–	8x26	250	300

[1] On request, [3] For power cable in accordance with I_N, max. ø for threaded connection, [4] Only with cooling jacket, [7] Weight of pressure shroud

Wilo-Sub TWI 10.125..-A

Dimension drawing

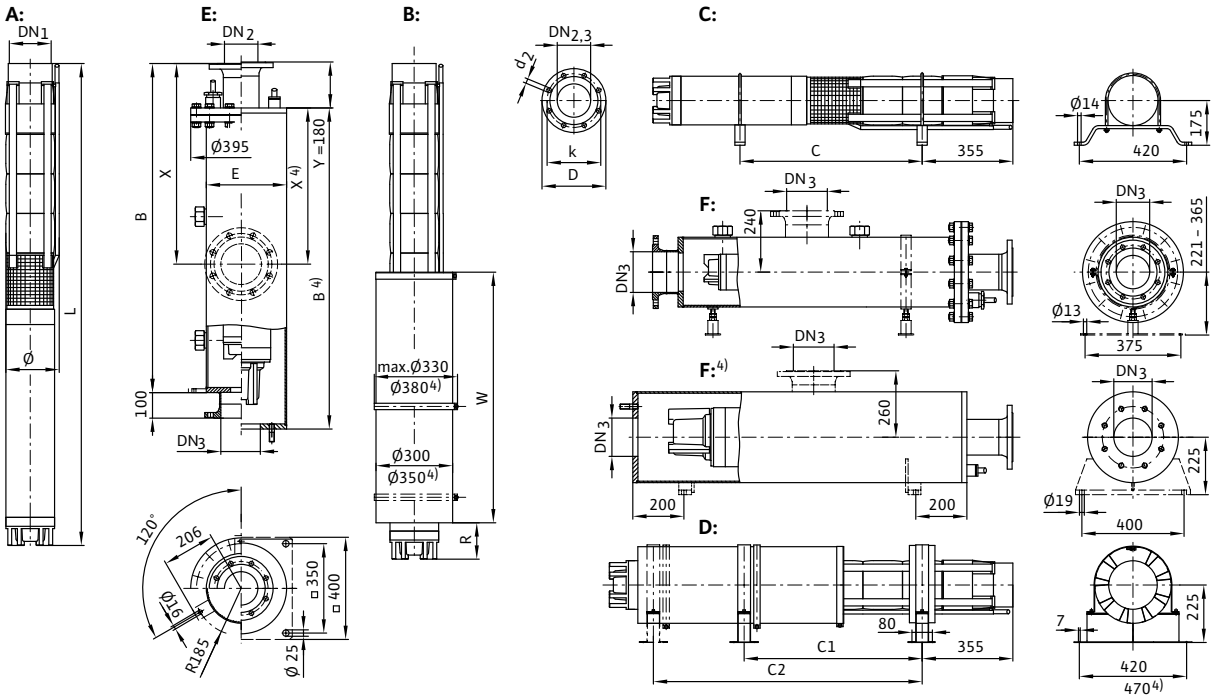

A = vertical, B = vertical with cooling jacket, C = horizontal, D = horizontal with cooling jacket, E = vertical with pressure shroud, F = horizontal with pressure shroud

Dimensions, weights

Wilo-Sub...	Type of motor	Dimensions									Weight		Installation
		B	*C*	*C1*	*C2*	*E*	*L*	*R*	*W*	*ø* 3)	*Jacket*7)	*Unit*	
		mm									kg		
TWI 010.125-08-A	NU 701-2/75	1)	–	–	–	1)	3135	65	1640	227	1)	285	A, B, E
TWI 010.125-08-A	NU 801-2/87	1)	–	–	–	1)	3205	135	1640	227	1)	272	A, B, E
TWI 010.125-08-A	NU 911-2/45	1)	2140	1)	–	1)	3128	1)	1)	247	1)	320	A, B, C, D, E, F
TWI 010.125-09-A	NU 701-2/93	1)	2410	2436	2963	1)	3643	57	2000	227	1)	368	A, B, C, D, E, F
TWI 010.125-09-A	NU 811-2/90	1)	–	–	–	1)	3468	120	1760	227	1)	278	A, B, E
TWI 010.125-09-A	NU 911-2/50	1)	2320	1)	–	1)	3334	1)	1)	247	1)	338	A, B, C, D, E, F
TWI 010.125-10-A	NU 701-2/93	1)	2570	2592	3119	1)	3798	57	2000	227	1)	373	A, B, C, D, E, F
TWI 010.125-10-A	NU 811-2/95	1)	–	–	–	1)	3673	170	1760	227	1)	291	A, B, E
TWI 010.125-10-A	NU 911-2/60	1)	2530	1)	–	1)	3590	1)	1)	247	1)	369	A, B, C, D, E, F
TWI 010.125-11-A	NU 701-2/110	1)	2840	2747	3503	1)	4183	286	2000	227	1)	421	A, B, C, D, E, F
TWI 010.125-11-A	NU 811-2/75	1)	–	–	–	1)	3829	170	1760	227	1)	296	A, B, E
TWI 010.125-11-A	NU 911-2/60	1)	2690	1)	1)	1)	3746	1)	1)	247	1)	374	A, B, C, D, E, F
TWI 010.125-12-A	NU 911-2/60	1)	2840	1)	1)	1)	3902	1)	1)	247	1)	379	A, B, C, D, E, F
TWI 010.125-13-A	NU 911-2/75	1)	1)	1)	1)	1)	4208	1)	1)	247	1)	424	A, B, C, D, E, F
TWI 010.125-14-A	NU 911-2/75	1)	1)	1)	1)	1)	4363	1)	1)	247	1)	431	A, B, C, D, E, F
TWI 010.125-15-A	NU 911-2/75	1)	1)	1)	1)	1)	4519	1)	1)	247	1)	437	A, B, C, D, E, F
TWI 010.125-16-A	NU 911-2/90	1)	1)	1)	1)	1)	4824	1)	1)	247	1)	483	A, B, C, D, E, F
TWI 010.125-17-A	NU 911-2/90	1)	1)	1)	1)	1)	4980	1)	1)	247	1)	489	A, B, C, D, E, F

1) On request, 3) For power cable in accordance with I_N, max. ø for threaded connection, 4) Only with cooling jacket, 7) Weight of pressure shroud

Wilo-Sub TWI 10.125..-A

Information for order placements					
Wilo-Sub...	**Type of motor**	🚚	**Art no.**	**Art. no. for cooling jacket pipe**	
				for vertical installa-tion (B)	*for horizontal installa-tion (D)*
TWI 010.125-08-A	NU 701-2/75	A	–	1)	-
TWI 010.125-08-A	NU 801-2/87	A	–	1)	-
TWI 010.125-08-A	NU 911-2/45	A	–	1)	1)
TWI 010.125-09-A	NU 701-2/93	A	–	1)	1)
TWI 010.125-09-A	NU 811-2/90	A	–	1)	-
TWI 010.125-09-A	NU 911-2/50	A	–	1)	1)
TWI 010.125-10-A	NU 701-2/93	A	–	1)	1)
TWI 010.125-10-A	NU 811-2/95	A	–	1)	-
TWI 010.125-10-A	NU 911-2/60	A	–	1)	1)
TWI 010.125-11-A	NU 701-2/110	A	–	1)	1)
TWI 010.125-11-A	NU 811-2/75	A	–	1)	-
TWI 010.125-11-A	NU 911-2/60	A	–	1)	1)
TWI 010.125-12-A	NU 911-2/60	A	–	1)	1)
TWI 010.125-13-A	NU 911-2/75	A	–	1)	1)
TWI 010.125-14-A	NU 911-2/75	A	–	1)	1)
TWI 010.125-15-A	NU 911-2/75	A	–	1)	1)
TWI 010.125-16-A	NU 911-2/90	A	–	1)	1)
TWI 010.125-17-A	NU 911-2/90	A	–	1)	1)

Motor efficiency based on 400 V, 50 Hz

Wilo-Sub TWI 10.160..-A

Pump curves Wilo-Sub TWI 10.160..-A

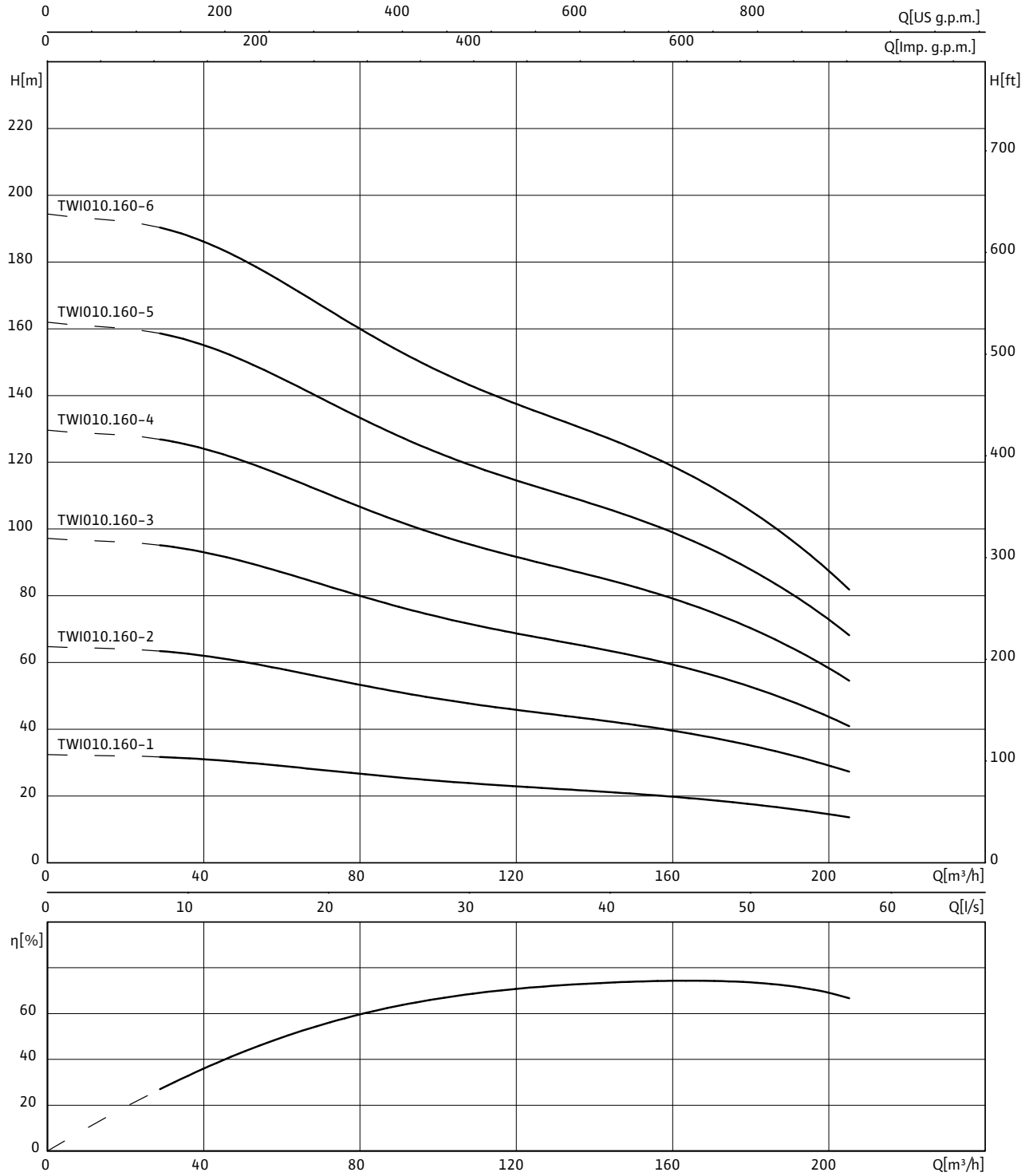

3~400 V, 50 Hz, p = 1 kg/dm^3, ν = 1x10^{-6} m^2/s, ISO 9906 Annex A, η = pump efficiency

Wilo-Sub TWI 10.160..-A

Motor data					
Wilo-Sub...	**Type of motor**	**Motor diameter**	**Mains connection**	**Nominal motor power**	**Nominal current**
		Ø		P_2	I_N
		"		kW	A
TWI 010.160-01-A	NU 501-2/15	6	3~400 V, 50 Hz	15	32.5
TWI 010.160-01-A	NU 611-2/13	6	3~400 V, 50 Hz	13	28.5
TWI 010.160-02-A	NU 501-2/30	6	3~400 V, 50 Hz	30	63.5
TWI 010.160-02-A	NU 611-2/26	6	3~400 V, 50 Hz	26	57
TWI 010.160-03-A	NU 501-2/37	6	3~400 V, 50 Hz	37	74
TWI 010.160-03-A	NU 611-2/37	6	3~400 V, 50 Hz	37	77
TWI 010.160-04-A	NU 701-2/55	8	3~400 V, 50 Hz	55	104
TWI 010.160-04-A	NU 801-2/60	8	3~400 V, 50 Hz	53	104
TWI 010.160-05-A	NU 701-2/75	8	3~400 V, 50 Hz	75	144
TWI 010.160-05-A	NU 801-2/75	8	3~400 V, 50 Hz	65	129
TWI 010.160-06-A	NU 701-2/75	8	3~400 V, 50 Hz	75	144
TWI 010.160-06-A	NU 801-2/87	8	3~400 V, 50 Hz	75	145

Flange dimensions									
Wilo-Sub...	**Connection**			**Pressure class**			**Dimensions**		
	DN1	*DN2*	*DN3*	PN_1	PN_2	PN_3	*D2*	*K*	*D*
	mm			bar			mm		
TWI 010...	Rp 6	–	–	10-64	–	–	–	–	–
TWI 010...	–	DN 100	–	–	10-16	–	8x18	180	220
TWI 010...	–	DN 100	–	–	25-40	–	8x22	190	235
TWI 010...	–	DN 125	DN 125	–	10-16	10	8x18	210	250
TWI 010...	–	DN 125	–	–	25-40	–	8x26	220	270
TWI 010...	–	DN 150	DN 150	–	10-16	10	8x22	240	285
TWI 010...	–	DN 150	–	–	25-40	–	8x26	250	300

[1] On request, [3] For power cable in accordance with I_N, max. ø for threaded connection, [4] Only with cooling jacket, [7] Weight of pressure shroud

Wilo-Sub TWI 10.160..-A

Dimension drawing

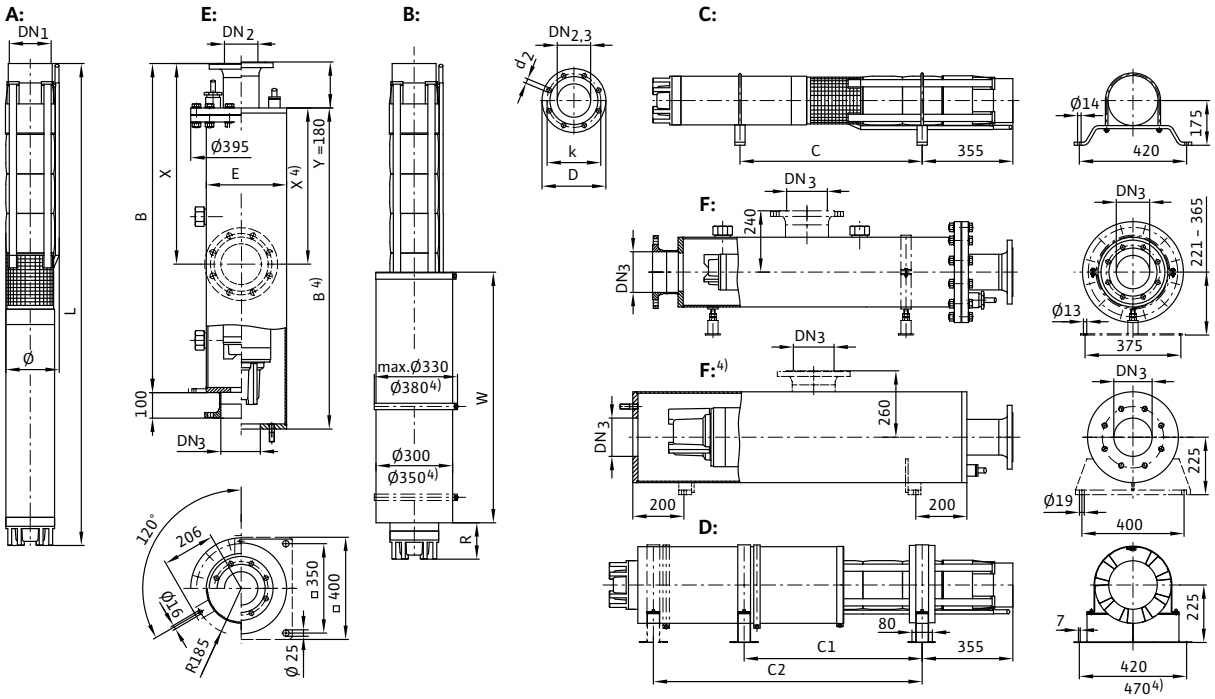

A = vertical, B = vertical with cooling jacket, C = horizontal, D = horizontal with cooling jacket, E = vertical with pressure shroud, F = horizontal with pressure shroud

Dimensions, weights

Wilo-Sub...	Type of motor	Dimensions									Weight		Installation
		B	*C*	*C1*	*C2*	*E*	*L*	*R*	*W*	*ø* [3]	*Jacket* [7]	*Unit*	
		mm									kg		
TWI 010.160-01-A	NU 501-2/15	1700	[1]	[1]	–	273	1428	[1]	[1]	218	108	88	A, B, C, D, E, F
TWI 010.160-01-A	NU 611-2/13	1700	[1]	[1]	–	273	1541	[1]	[1]	218	108	95	A, B, C, D, E, F
TWI 010.160-02-A	NU 501-2/30	2000	[1]	[1]	–	273	1844	[1]	[1]	218	116	121	A, B, C, D, E, F
TWI 010.160-02-A	NU 611-2/26	2300	[1]	[1]	–	273	1956	[1]	[1]	218	124	126	A, B, C, D, E, F
TWI 010.160-03-A	NU 501-2/37	2600	[1]	[1]	–	273	2368	[1]	[1]	218	132	179	A, B, C, D, E, F
TWI 010.160-03-A	NU 611-2/37	2600	–	–	–	273	2352	[1]	[1]	218	132	150	A, B, E
TWI 010.160-04-A	NU 701-2/55	2600	–	–	–	273	2322	[1]	[1]	227	132	226	A, B, E
TWI 010.160-04-A	NU 801-2/60	2600	[1]	[1]	–	273	2313	[1]	[1]	227	132	204	A, B, C, D, E, F
TWI 010.160-05-A	NU 701-2/75	2900	–	–	–	273	2669	[1]	[1]	227	140	271	A, B, E
TWI 010.160-05-A	NU 801-2/75	2900	–	–	–	273	2619	[1]	[1]	227	140	238	A, B, E
TWI 010.160-06-A	NU 701-2/75	[1]	–	–	–	[1]	2824	[1]	[1]	227	[1]	277	A, B, E
TWI 010.160-06-A	NU 801-2/87	[1]	–	–	–	[1]	2894	[1]	[1]	227	[1]	264	A, B, E

[1] On request, [3] For power cable in accordance with I_N, max. ø for threaded connection, [4] Only with cooling jacket, [7] Weight of pressure shroud

Wilo-Sub TWI 10.160..-A

Information for order placements					
Wilo-Sub...	**Type of motor**		**Art no.**	**Art. no. for cooling jacket pipe**	
				for vertical installation (B)	*for horizontal installation (D)*
TWI 010.160-01-A	NU 501-2/15	A	–	1)	1)
TWI 010.160-01-A	NU 611-2/13	A	–	1)	1)
TWI 010.160-02-A	NU 501-2/30	A	–	1)	1)
TWI 010.160-02-A	NU 611-2/26	A	–	1)	1)
TWI 010.160-03-A	NU 501-2/37	A	–	1)	1)
TWI 010.160-03-A	NU 611-2/37	A	–	1)	–
TWI 010.160-04-A	NU 701-2/55	A	–	1)	–
TWI 010.160-04-A	NU 801-2/60	A	–	1)	1)
TWI 010.160-05-A	NU 701-2/75	A	–	1)	–
TWI 010.160-05-A	NU 801-2/75	A	–	1)	–
TWI 010.160-06-A	NU 701-2/75	A	–	1)	–
TWI 010.160-06-A	NU 801-2/87	A	–	1)	–

Motor efficiency based on 400 V, 50 Hz

Wilo-Sub TWI 10.160..-A

Pump curves Wilo-Sub TWI 10.160..-A

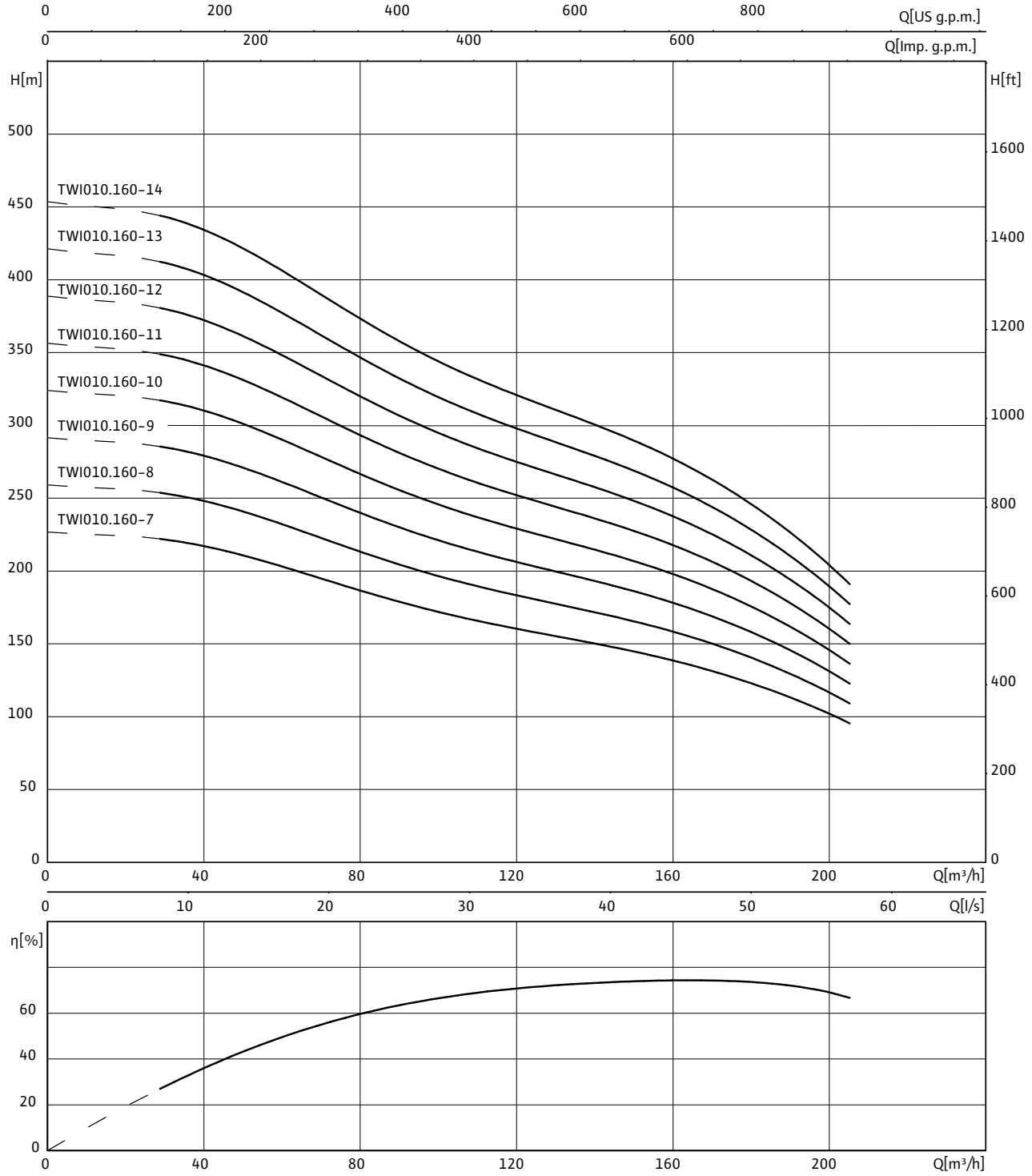

3~400 V, 50 Hz, p = 1 kg/dm^3, ν = 1x10^{-6} m^2/s, ISO 9906 Annex A, η = pump efficiency

Wilo-Sub TWI 10.160..-A

Motor data					
Wilo-Sub...	**Type of motor**	**Motor diameter**	**Mains connection**	**Nominal motor power**	**Nominal current**
		Ø		P_2	I_N
		"		kW	A
TWI 010.160-07-A	NU 701-2/93	8	3~400 V, 50 Hz	93	186
TWI 010.160-07-A	NU 811-2/90	8	3~400 V, 50 Hz	90	168
TWI 010.160-08-A	NU 701-2/110	8	3~400 V, 50 Hz	110	215
TWI 010.160-08-A	NU 811-2/95	8	3~400 V, 50 Hz	110	210
TWI 010.160-09-A	NU 701-2/110	8	3~400 V, 50 Hz	110	215
TWI 010.160-09-A	NU 811-2/95	8	3~400 V, 50 Hz	110	210
TWI 010.160-10-A	NU 911-2/75	10	3~400 V, 50 Hz	145	280
TWI 010.160-11-A	NU 911-2/75	10	3~400 V, 50 Hz	145	280
TWI 010.160-12-A	NU 911-2/90	10	3~400 V, 50 Hz	170	330
TWI 010.160-13-A	NU 911-2/90	10	3~400 V, 50 Hz	170	330
TWI 010.160-14-A	NU 911-2/100	10	3~400 V, 50 Hz	190	370

Flange dimensions									
Wilo-Sub...	**Connection**			**Pressure class**			**Dimensions**		
	DN1	*DN2*	*DN3*	PN_1	PN_2	PN_3	*D2*	*K*	*D*
	mm			bar			mm		
TWI 010...	Rp 6	–	–	10-64	–	–	–	–	–
TWI 010...	–	DN 100	–	–	10-16	–	8x18	180	220
TWI 010...	–	DN 100	–	–	25-40	–	8x22	190	235
TWI 010...	–	DN 125	DN 125	–	10-16	10	8x18	210	250
TWI 010...	–	DN 125	–	–	25-40	–	8x26	220	270
TWI 010...	–	DN 150	DN 150	–	10-16	10	8x22	240	285
TWI 010...	–	DN 150	–	–	25-40	–	8x26	250	300

[1] On request, [3] For power cable in accordance with I_N, max. ø for threaded connection, [4] Only with cooling jacket, [7] Weight of pressure shroud

Wilo-Sub TWI 10.160..-A

Dimension drawing

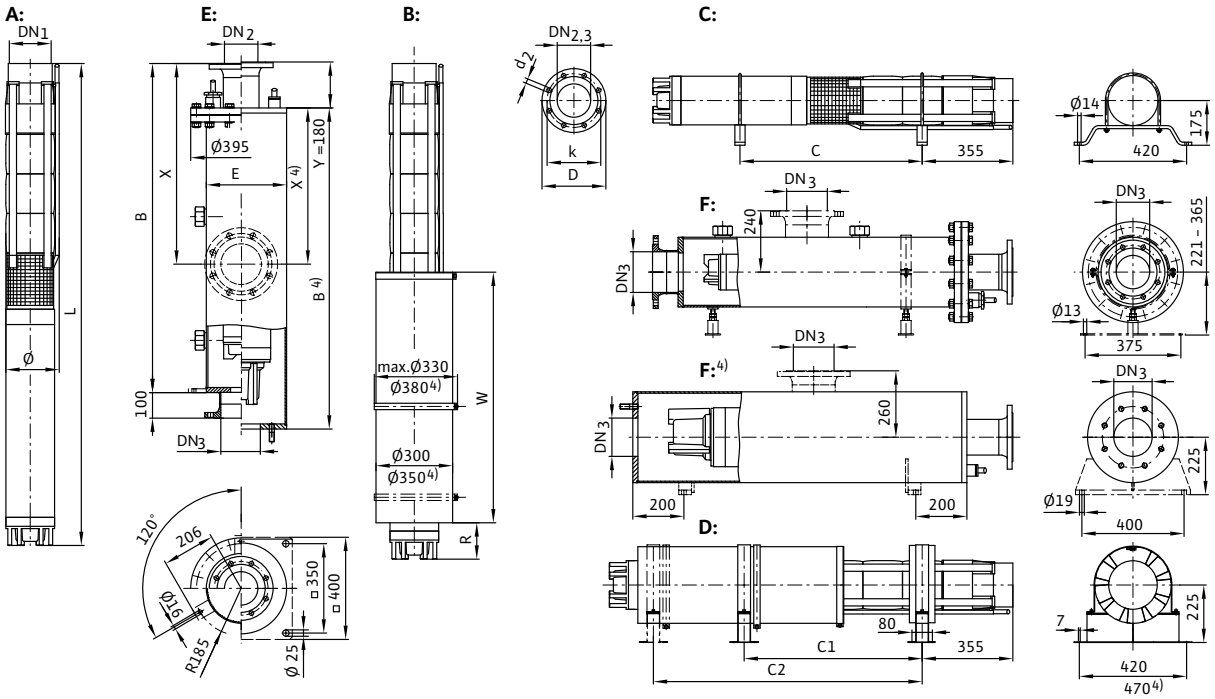

A = vertical, B = vertical with cooling jacket, C = horizontal, D = horizontal with cooling jacket, E = vertical with pressure shroud, F = horizontal with pressure shroud

Dimensions, weights

Wilo-Sub...	Type of motor	Dimensions									Weight		Installation
		B	*C*	*C1*	*C2*	*E*	*L*	*R*	*W*	*ø* [3]	*Jacket* [7]	*Unit*	
		mm									kg		
TWI 010.160-07-A	NU 701-2/93	[1]	[1]	[1]	[1]	[1]	3332	[1]	[1]	227	[1]	362	A, B, C, D, E, F
TWI 010.160-07-A	NU 811-2/90	[1]	–	–	–	[1]	3157	[1]	[1]	227	[1]	272	A, B, E
TWI 010.160-08-A	NU 701-2/110	[1]	[1]	[1]	[1]	[1]	3716	[1]	[1]	227	[1]	411	A, B, C, D, E, F
TWI 010.160-08-A	NU 811-2/95	[1]	–	–	–	[1]	3362	[1]	[1]	227	[1]	286	A, B, E
TWI 010.160-09-A	NU 701-2/110	[1]	[1]	[1]	[1]	[1]	3872	[1]	[1]	227	[1]	418	A, B, C, D, E, F
TWI 010.160-09-A	NU 811-2/95	[1]	–	–	–	[1]	3518	[1]	[1]	227	[1]	293	A, B, E
TWI 010.160-10-A	NU 911-2/75	[1]	[1]	[1]	[1]	[1]	3741	[1]	[1]	247	[1]	411	A, B, C, D, E, F
TWI 010.160-11-A	NU 911-2/75	[1]	[1]	[1]	[1]	[1]	3897	[1]	[1]	247	[1]	418	A, B, C, D, E, F
TWI 010.160-12-A	NU 911-2/90	[1]	[1]	[1]	[1]	[1]	4202	[1]	[1]	247	[1]	463	A, B, C, D, E, F
TWI 010.160-13-A	NU 911-2/90	[1]	[1]	[1]	[1]	[1]	4358	[1]	[1]	247	[1]	469	A, B, C, D, E, F
TWI 010.160-14-A	NU 911-2/100	[1]	–	–	–	[1]	4613	[1]	[1]	247	[1]	502	A, B, E

[1] On request, [3] For power cable in accordance with I_N, max. ø for threaded connection, [4] Only with cooling jacket, [7] Weight of pressure shroud

Wilo-Sub TWI 10.160..-A

Information for order placements					
Wilo-Sub...	**Type of motor**	🚚	**Art no.**	**Art. no. for cooling jacket pipe**	
				for vertical installation (B)	*for horizontal installation (D)*
TWI 010.160-07-A	NU 701-2/93	A	–	1)	1)
TWI 010.160-07-A	NU 811-2/90	A	–	1)	–
TWI 010.160-08-A	NU 701-2/110	A	–	1)	1)
TWI 010.160-08-A	NU 811-2/95	A	–	1)	–
TWI 010.160-09-A	NU 701-2/110	A	–	1)	1)
TWI 010.160-09-A	NU 811-2/95	A	–	1)	–
TWI 010.160-10-A	NU 911-2/75	A	–	1)	1)
TWI 010.160-11-A	NU 911-2/75	A	–	1)	1)
TWI 010.160-12-A	NU 911-2/90	A	–	1)	1)
TWI 010.160-13-A	NU 911-2/90	A	–	1)	1)
TWI 010.160-14-A	NU 911-2/100	A	–	1)	–

Motor efficiency based on 400 V, 50 Hz

Wilo-Sub TWI 10.215..-A

Pump curves Wilo-Sub TWI 10.215..-A

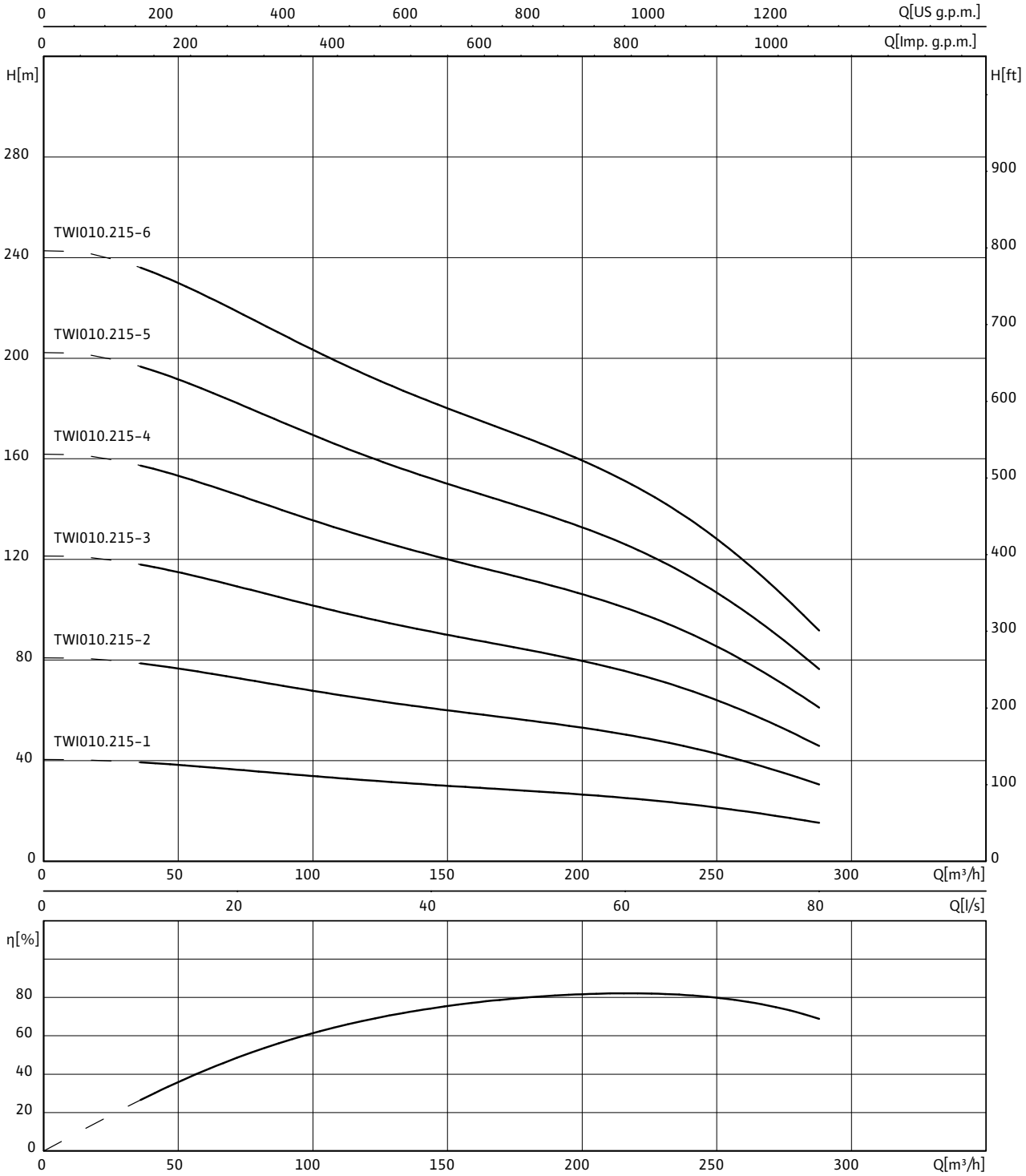

3~400 V, 50 Hz, p = 1 kg/dm^3, ν = 1x10^{-6} m^2/s, ISO 9906 Annex A, η = pump efficiency

Wilo-Sub TWI 10.215..-A

Motor data					
Wilo-Sub...	**Type of motor**	**Motor diameter**	**Mains connection**	**Nominal motor power**	**Nominal current**
		Ø		P_2	I_N
		"		kW	A
TWI 010.215-01-A	NU 501-2/22	6	3~400 V, 50 Hz	22	44.5
TWI 010.215-01-A	NU 611-2/22	6	3~400 V, 50 Hz	22	47.5
TWI 010.215-02-A	NU 701-2/45	8	3~400 V, 50 Hz	45	88
TWI 010.215-02-A	NU 801-2/55	8	3~400 V, 50 Hz	47.5	95
TWI 010.215-03-A	NU 701-2/75	8	3~400 V, 50 Hz	75	144
TWI 010.215-03-A	NU 801-2/75	8	3~400 V, 50 Hz	65	129
TWI 010.215-04-A	NU 701-2/75	8	3~400 V, 50 Hz	75	144
TWI 010.215-04-A	NU 801-2/87	8	3~400 V, 50 Hz	75	145
TWI 010.215-05-A	NU 701-2/93	8	3~400 V, 50 Hz	93	186
TWI 010.215-05-A	NU 811-2/95	8	3~400 V, 50 Hz	110	210
TWI 010.215-06-A	NU 701-2/110	8	3~400 V, 50 Hz	110	215
TWI 010.215-06-A	NU 811-2/95	8	3~400 V, 50 Hz	110	210
TWI 010.215-01-A	NU 501-2/22	6	3~400 V, 50 Hz	22	44.5
TWI 010.215-01-A	NU 611-2/22	6	3~400 V, 50 Hz	22	47.5
TWI 010.215-02-A	NU 701-2/45	8	3~400 V, 50 Hz	45	88
TWI 010.215-02-A	NU 801-2/55	8	3~400 V, 50 Hz	47.5	95
TWI 010.215-03-A	NU 701-2/75	8	3~400 V, 50 Hz	75	144
TWI 010.215-03-A	NU 801-2/75	8	3~400 V, 50 Hz	65	129
TWI 010.215-04-A	NU 701-2/75	8	3~400 V, 50 Hz	75	144
TWI 010.215-04-A	NU 801-2/87	8	3~400 V, 50 Hz	75	145
TWI 010.215-05-A	NU 701-2/93	8	3~400 V, 50 Hz	93	186
TWI 010.215-05-A	NU 811-2/95	8	3~400 V, 50 Hz	110	210
TWI 010.215-06-A	NU 701-2/110	8	3~400 V, 50 Hz	110	215
TWI 010.215-06-A	NU 811-2/95	8	3~400 V, 50 Hz	110	210

Flange dimensions									
Wilo-Sub...	**Connection**			**Pressure class**			**Dimensions**		
	DN1	*DN2*	*DN3*	PN_1	PN_2	PN_3	*D2*	*K*	*D*
	mm			bar			mm		
TWI 010...	Rp 6	–	–	10-64	–	–	–	–	–
TWI 010...	–	DN 100	–	–	10-16	–	8x18	180	220
TWI 010...	–	DN 100	–	–	25-40	–	8x22	190	235
TWI 010...	–	DN 125	DN 125	–	10-16	10	8x18	210	250
TWI 010...	–	DN 125	–	–	25-40	–	8x26	220	270
TWI 010...	–	DN 150	DN 150	–	10-16	10	8x22	240	285
TWI 010...	–	DN 150	–	–	25-40	–	8x26	250	300

[1] On request, [3] For power cable in accordance with I_N, max. ø for threaded connection, [4] Only with cooling jacket, [7] Weight of pressure shroud

Wilo-Sub TWI 10.215..-A

Dimension drawing

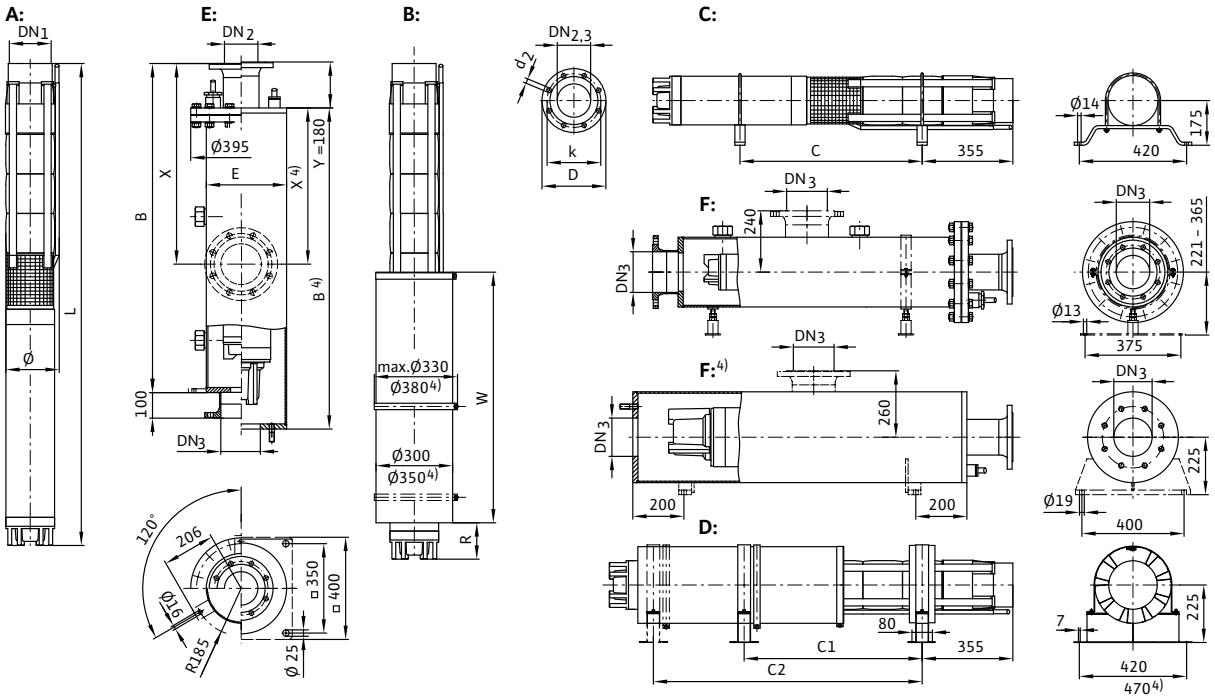

A = vertical, B = vertical with cooling jacket, C = horizontal, D = horizontal with cooling jacket, E = vertical with pressure shroud, F = horizontal with pressure shroud

Dimensions, weights

Wilo-Sub...	Type of motor	Dimensions									Weight		Installation
		B	*C*	*C1*	*C2*	*E*	*L*	*R*	*W*	*ø* 3)	*Jacket* 7)	*Unit*	
		mm									kg		
TWI 010.215-01-A	NU 501-2/22	2000	1)	1)	–	273	1679	1)	1)	241	116	115	A, B, C, D, E, F
TWI 010.215-01-A	NU 611-2/22	2000	1)	1)	–	273	1851	1)	1)	241	116	129	A, B, C, D, E, F
TWI 010.215-02-A	NU 701-2/45	2300	–	–	–	273	2010	1)	1)	241	124	201	A, B, E
TWI 010.215-02-A	NU 801-2/55	2300	1)	1)	–	273	2093	1)	1)	241	124	201	A, B, C, D, E, F
TWI 010.215-03-A	NU 701-2/75	2900	–	–	–	273	2519	1)	1)	241	140	279	A, B, E
TWI 010.215-03-A	NU 801-2/75	2600	–	–	–	273	2469	1)	1)	241	132	246	A, B, E
TWI 010.215-04-A	NU 701-2/75	2900	–	–	–	1)	2695	1)	1)	241	140	288	A, B, E
TWI 010.215-04-A	NU 801-2/87	2900	–	–	–	1)	2765	1)	1)	241	140	275	A, B, E
TWI 010.215-05-A	NU 701-2/93	1)	1)	1)	1)	1)	3223	1)	1)	241	1)	377	A, B, C, D, E, F
TWI 010.215-05-A	NU 811-2/95	1)	–	–	–	1)	3098	1)	1)	241	1)	295	A, B, E
TWI 010.215-06-A	NU 701-2/110	1)	1)	1)	1)	1)	3628	1)	1)	241	1)	430	A, B, C, D, E, F
TWI 010.215-06-A	NU 811-2/95	1)	–	–	–	1)	3274	1)	1)	241	1)	305	A, B, E
TWI 010.215-01-A	NU 501-2/22	2000	1)	1)	–	273	1679	1)	1)	241	116	115	A, B, C, D, E, F
TWI 010.215-01-A	NU 611-2/22	2000	1)	1)	–	273	1851	1)	1)	241	116	129	A, B, C, D, E, F
TWI 010.215-02-A	NU 701-2/45	2300	–	–	–	273	2010	1)	1)	241	124	201	A, B, E
TWI 010.215-02-A	NU 801-2/55	2300	1)	1)	–	273	2093	1)	1)	241	124	201	A, B, C, D, E, F
TWI 010.215-03-A	NU 701-2/75	2900	–	–	–	273	2519	1)	1)	241	140	279	A, B, E
TWI 010.215-03-A	NU 801-2/75	2600	–	–	–	273	2469	1)	1)	241	132	246	A, B, E

Wilo-Sub TWI 10.215..-A

Dimensions, weights

Wilo-Sub...	Type of motor	Dimensions									Weight		Installation
		B	*C*	*C1*	*C2*	*E*	*L*	*R*	*W*	*ø* [3]	*Jacket*[7]	*Unit*	
		mm									kg		
TWI 010.215-04-A	NU 701-2/75	2900	–	–	–	[1]	2695	[1]	[1]	241	140	288	A, B, E
TWI 010.215-04-A	NU 801-2/87	2900	–	–	–	[1]	2765	[1]	[1]	241	140	275	A, B, E
TWI 010.215-05-A	NU 701-2/93	[1]	[1]	[1]	[1]	[1]	3223	[1]	[1]	241	[1]	377	A, B, C, D, E, F
TWI 010.215-05-A	NU 811-2/95	[1]	–	–	–	[1]	3098	[1]	[1]	241	[1]	295	A, B, E
TWI 010.215-06-A	NU 701-2/110	[1]	[1]	[1]	[1]	[1]	3628	[1]	[1]	241	[1]	430	A, B, C, D, E, F
TWI 010.215-06-A	NU 811-2/95	[1]	–	–	–	[1]	3274	[1]	[1]	241	[1]	305	A, B, E

[1] On request, [3] For power cable in accordance with I_N, max. ø for threaded connection, [4] Only with cooling jacket, [7] Weight of pressure shroud

Information for order placements

Wilo-Sub...	Type of motor	🚚	Art no.	Art. no. for cooling jacket pipe	
				for vertical installation (B)	*for horizontal installation (D)*
TWI 010.215-01-A	NU 501-2/22	A	–	[1]	–
TWI 010.215-01-A	NU 611-2/22	A	–	[1]	–
TWI 010.215-02-A	NU 701-2/45	A	–	[1]	–
TWI 010.215-02-A	NU 801-2/55	A	–	[1]	–
TWI 010.215-03-A	NU 701-2/75	A	–	[1]	–
TWI 010.215-03-A	NU 801-2/75	A	–	[1]	–
TWI 010.215-04-A	NU 701-2/75	A	–	[1]	–
TWI 010.215-04-A	NU 801-2/87	A	–	[1]	–
TWI 010.215-05-A	NU 701-2/93	A	–	[1]	–
TWI 010.215-05-A	NU 811-2/95	A	–	[1]	–
TWI 010.215-06-A	NU 701-2/110	A	–	[1]	–
TWI 010.215-06-A	NU 811-2/95	A	–	[1]	–
TWI 010.215-01-A	NU 501-2/22	A	–	[1]	–
TWI 010.215-01-A	NU 611-2/22	A	–	[1]	–
TWI 010.215-02-A	NU 701-2/45	A	–	[1]	–
TWI 010.215-02-A	NU 801-2/55	A	–	[1]	–
TWI 010.215-03-A	NU 701-2/75	A	–	[1]	–
TWI 010.215-03-A	NU 801-2/75	A	–	[1]	–
TWI 010.215-04-A	NU 701-2/75	A	–	[1]	–
TWI 010.215-04-A	NU 801-2/87	A	–	[1]	–
TWI 010.215-05-A	NU 701-2/93	A	–	[1]	–
TWI 010.215-05-A	NU 811-2/95	A	–	[1]	–
TWI 010.215-06-A	NU 701-2/110	A	–	[1]	–
TWI 010.215-06-A	NU 811-2/95	A	–	[1]	–

Motor efficiency based on 400 V, 50 Hz

Wilo-Sub TWI 10.215..-A

Pump curves Wilo-Sub TWI 10.215..-A

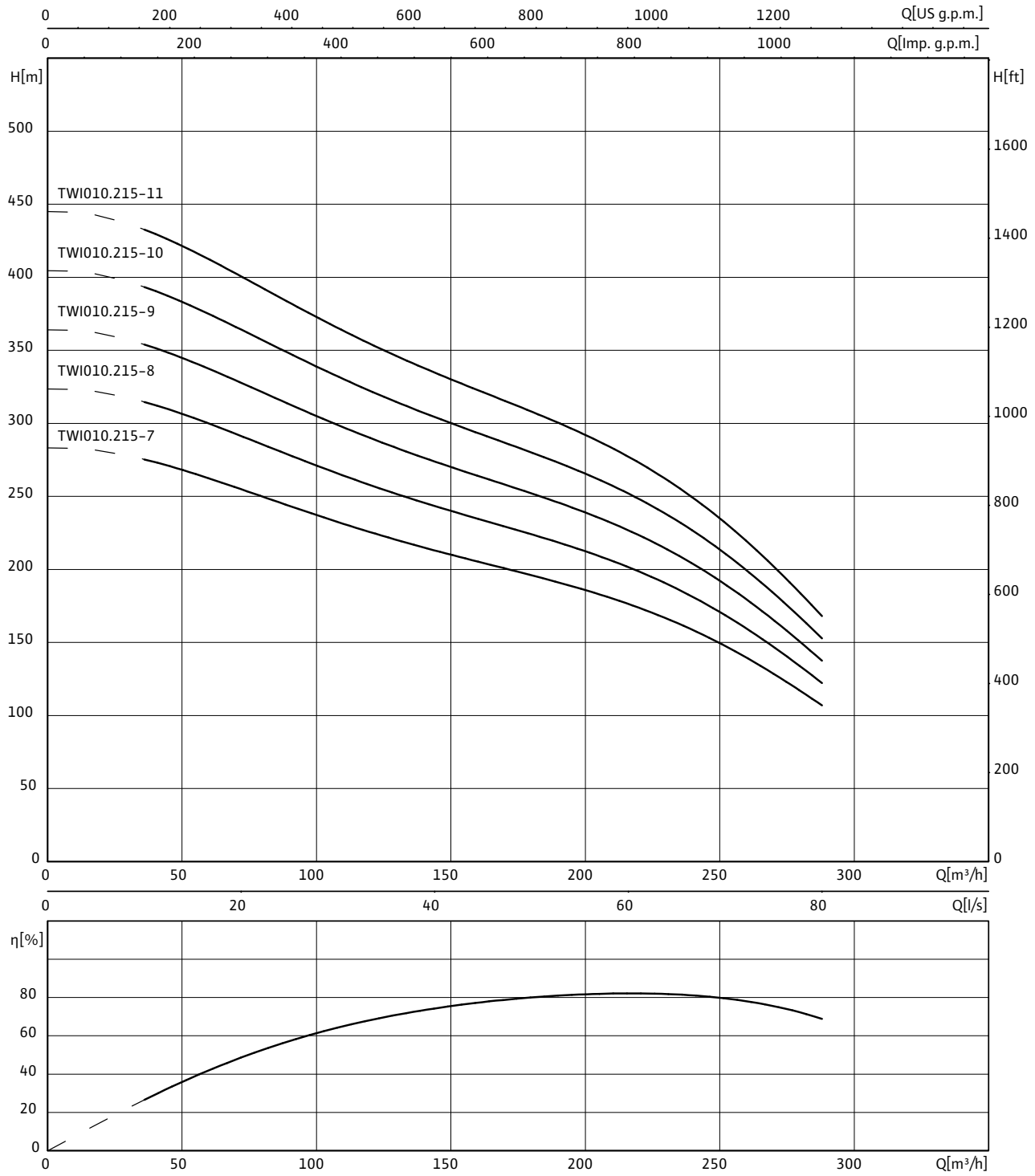

3~400 V, 50 Hz, p = 1 kg/dm^3, ν = 1x10^{-6} m^2/s, ISO 9906 Annex A, η = pump efficiency

Wilo-Sub TWI 10.215..-A

Motor data					
Wilo-Sub...	**Type of motor**	**Motor diameter**	**Mains connection**	**Nominal motor power**	**Nominal current**
		Ø		P_2	I_N
		"		kW	A
TWI 010.215-07-A	NU 911-2/75	10	3~400 V, 50 Hz	145	280
TWI 010.215-08-A	NU 911-2/90	10	3~400 V, 50 Hz	170	330
TWI 010.215-09-A	NU 911-2/90	10	3~400 V, 50 Hz	170	330
TWI 010.215-10-A	NU 122-2/75	12	3~400 V, 50 Hz	200	390
TWI 010.215-11-A	NU 122-2/90	12	3~400 V, 50 Hz	240	460
TWI 010.215-07-A	NU 911-2/75	10	3~400 V, 50 Hz	145	280
TWI 010.215-08-A	NU 911-2/90	10	3~400 V, 50 Hz	170	330
TWI 010.215-09-A	NU 911-2/90	10	3~400 V, 50 Hz	170	330
TWI 010.215-10-A	NU 122-2/75	12	3~400 V, 50 Hz	200	390
TWI 010.215-11-A	NU 122-2/90	12	3~400 V, 50 Hz	240	460

Flange dimensions									
Wilo-Sub...	**Connection**			**Pressure class**			**Dimensions**		
	DN1	*DN2*	*DN3*	PN_1	PN_2	PN_3	*D2*	*K*	*D*
	mm			bar			mm		
TWI 010...	Rp 6	–	–	10-64	–	–	–	–	–
TWI 010...	–	DN 100	–	–	10-16	–	8x18	180	220
TWI 010...	–	DN 100	–	–	25-40	–	8x22	190	235
TWI 010...	–	DN 125	DN 125	–	10-16	10	8x18	210	250
TWI 010...	–	DN 125	–	–	25-40	–	8x26	220	270
TWI 010...	–	DN 150	DN 150	–	10-16	10	8x22	240	285
TWI 010...	–	DN 150	–	–	25-40	–	8x26	250	300

[1] On request, [3] For power cable in accordance with I_N, max. ø for threaded connection, [4] Only with cooling jacket, [7] Weight of pressure shroud

Wilo-Sub TWI 10.215..-A

Dimension drawing

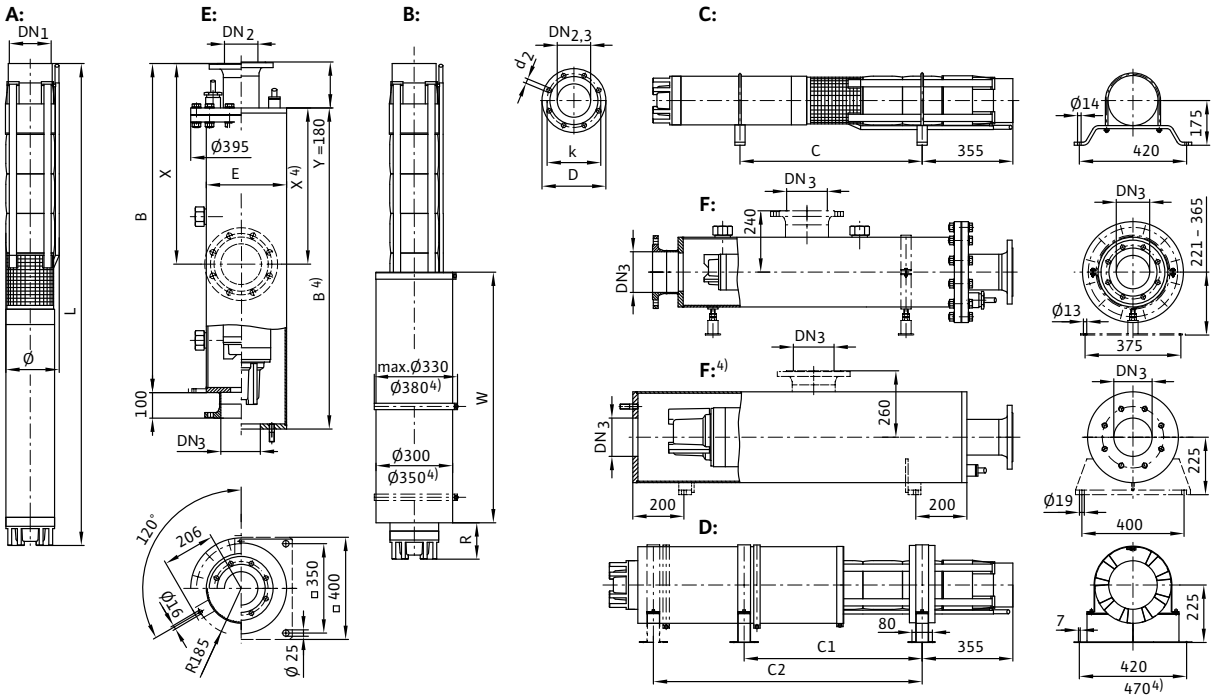

A = vertical, B = vertical with cooling jacket, C = horizontal, D = horizontal with cooling jacket, E = vertical with pressure shroud, F = horizontal with pressure shroud

Dimensions, weights

Wilo-Sub...	Type of motor	Dimensions									Weight		Installation
		B	*C*	*C1*	*C2*	*E*	*L*	*R*	*W*	*ø* [3]	*Jacket* [7]	*Unit*	
		mm									kg		
TWI 010.215-07-A	NU 911-2/75	1)	1)	1)	1)	1)	3528	1)	1)	274	1)	436	A, B, C, D, E, F
TWI 010.215-08-A	NU 911-2/90	1)	1)	1)	1)	1)	3854	1)	1)	274	1)	486	A, B, C, D, E, F
TWI 010.215-09-A	NU 911-2/90	1)	1)	1)	1)	1)	4030	1)	1)	274	1)	496	A, B, C, D, E, F
TWI 010.215-10-A	NU 122-2/75	1)	1)	1)	1)	1)	1)	1)	1)	280	1)	1)	A, B, C, D, E, F
TWI 010.215-11-A	NU 122-2/90	1)	1)	1)	1)	1)	1)	1)	1)	280	1)	1)	A, B, C, D, E, F
TWI 010.215-07-A	NU 911-2/75	1)	1)	1)	1)	1)	3528	1)	1)	274	1)	436	A, B, C, D, E, F
TWI 010.215-08-A	NU 911-2/90	1)	1)	1)	1)	1)	3854	1)	1)	274	1)	486	A, B, C, D, E, F
TWI 010.215-09-A	NU 911-2/90	1)	1)	1)	1)	1)	4030	1)	1)	274	1)	496	A, B, C, D, E, F
TWI 010.215-10-A	NU 122-2/75	1)	1)	1)	1)	1)	1)	1)	1)	280	1)	1)	A, B, C, D, E, F
TWI 010.215-11-A	NU 122-2/90	1)	1)	1)	1)	1)	1)	1)	1)	280	1)	1)	A, B, C, D, E, F

[1] On request, [3] For power cable in accordance with I_N, max. ø for threaded connection, [4] Only with cooling jacket, [7] Weight of pressure shroud

Wilo-Sub TWI 10.215..-A

Information for order placements					
Wilo-Sub...	**Type of motor**	🚚	**Art no.**	**Art. no. for cooling jacket pipe**	
				for vertical installation (B)	*for horizontal installation (D)*
TWI 010.215-07-A	NU 911-2/75	A	–	–	–
TWI 010.215-08-A	NU 911-2/90	A	–	–	–
TWI 010.215-09-A	NU 911-2/90	A	–	–	–
TWI 010.215-10-A	NU 122-2/75	A	–	–	–
TWI 010.215-11-A	NU 122-2/90	A	–	–	–
TWI 010.215-07-A	NU 911-2/75	A	–	–	–
TWI 010.215-08-A	NU 911-2/90	A	–	–	–
TWI 010.215-09-A	NU 911-2/90	A	–	–	–
TWI 010.215-10-A	NU 122-2/75	A	–	–	–
TWI 010.215-11-A	NU 122-2/90	A	–	–	–

Motor efficiency based on 400 V, 50 Hz

Mechanical accessories

Centring device

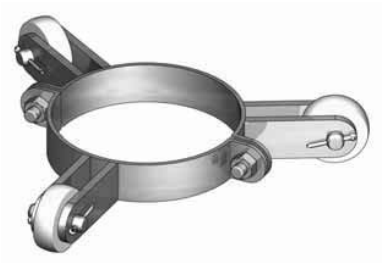

Centring apparatuses facilitate the installation and dismantling of submersible-motor pumps and protect the well pipework (plastic, plastic coating, etc.) and the power cable against damage. In addition, they ensure the centred installation of the unit and thereby also a uniform intake of water. Installation is carried out on the ascending pipe immediately above the submersible-motor pump.

Cable clip

The cable clip is used for fixation of the power cable to the ascending pipe. The cable clips are mounted at shorter distances apart, depending on the cable cross-section and/or weight. Two cable clips each are provided for cable cross-sections of up to 25 mm^2 for each ascending pipe (5-6 m) and for each power cable. Larger cable cross-sections are mounted additionally at intervals of 1 to 3 m. The cable clips are mounted respectively at both ends of an ascending pipe – just before the flange or the sleeve – (with separate cable clips for each if there are two power cables). It must be ensured that the power cable will not be able to slide free.

The cable clip is made of SBR rubber with a locking hook made of rust-free stainless steel, available in sizes 32 - 500 mm.

Bearing brackets for horizontal installation

Bearing brackets are used for supporting the horizontal installation of submersible pumps. These are to be made specifically in terms of size and design for each type of unit. One has a choice between galvanised steel and stainless steel as the material.

Availability, materials used and order number can be found in the catalogue pages for the respective type.

Mechanical accessories

Pressure gauge

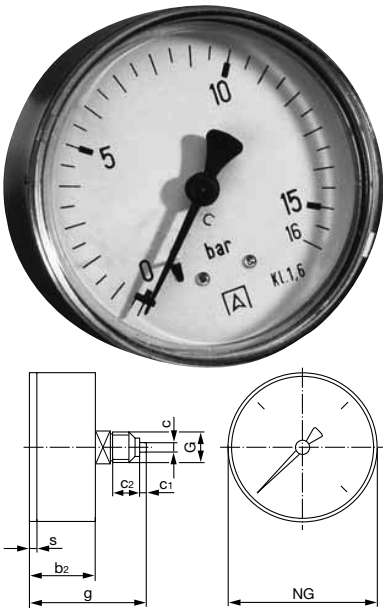

Pressure gauge for displaying the current pressure in the pipe system.

Overview of sizes

Pressure range	Dimensions								Wrench size
	NG	b2	c	c1	c2	g	S	G	SW
[bar]	[mm]							[inch]	[mm]
0 – 6	63	28	3	5	12	53	3	¼	14
0 – 10	63	28	3	5	12	53	3	¼	14
0 – 16	63	28	3	5	12	53	3	¼	14
0 – 25	63	28	3	5	12	53	3	¼	14
0 – 40	63	28	3	5	12	53	3	¼	14

Sockets

Overview of sizes

Threaded connection	Length	Material
	–	–
	[mm]	–
G 2	56	1.4571
G 2½	–	1.4571
G 3	71	1.4571
G 4	83	1.4571
G 5	92	1.4571
G 6	92	1.4571

Flange-thread transition

Overview of sizes

Flange connection	Threaded connection	Material
	–	–
	[inch]	–
DN50 / PN16	R 1¼	1.4301
DN50 / PN16	R 1½	1.4301
DN50 / PN16	R 2	1.4301
DN65 / PN16	R 1½	1.4301
DN65 / PN16	R 2	1.4301
DN65 / PN16	R 2½	1.4301
DN80 / PN16	R 2	1.4301
DN80 / PN16	R 2½	1.4301
DN80 / PN16	R 3	1.4301 or NiAl-Bz
DN100 / PN16	R 3	1.4301
DN100 / PN16	R 4	1.4301
DN150 / PN16	R 4	1.4301
DN150 / PN16	R 5	1.4301

Mechanical accessories

Threaded flange

Overview of sizes		
Flange connection	Threaded connection	Material
	–	–
	[inch]	–
DN50 / PN16	R 2	1.4571
DN50 / PN40	R 2	1.4571
DN65 / PN16	R 1½	1.4571
DN65 / PN40	R 1½	1.4571
DN80 / PN16	R 3	1.4571
DN80 / PN40	R 3	1.4571
DN100 / PN16	R 4	1.4571
DN100 / PN40	R 4	1.4571
DN150 / PN16	R 6	1.4571
DN150 / PN40	R 6	1.4571

Pipe double nipple

Overview of sizes		
Threaded connection	Length	Material
	–	–
	[mm]	–
R 1½	80	1.4571
R 2	100	1.4571
R 2½	80	1.4571
R 3	120	1.4571
R 4	120	1.4571
R 5	150	1.4571
R 6	150	1.4571

Reducer adapter

Overview of sizes		
Threaded connection	Threaded connection	Material
on pump side	on pressure side	–
	[inch]	–
R 2	R 1½	1.4571 or 1.4570
R 2½	R 2	1.4571
R 3	R 2	1.4571
R 3	R 2½	1.4571
R 4	R 2½	1.4571
R 4	R 3	1.4571
R 4	R 3½	1.4571
R 5	R 4	1.4571
R 6	R 5	1.4571

Cooling jacket pipes

Mechanical accessories

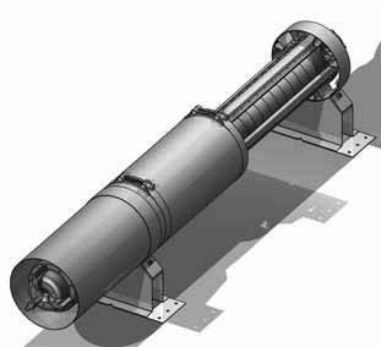

To achieve the flow rate required to cool the motor, submersible pumps can be equipped with a cooling jacket pipe. This is recommended in the following cases:

- If sludge deposits could form on the motor (e.g. with applications in a pump sump directly above the ground)
- Improved motor cooling is required due to unusual operating conditions
- If there is no unperforated well casing in the well and the pump needs to be installed in the filtration pipe system
- If there is sand in the well
- Installation is performed in rock springs without piping.

Cooling jacket pipes are suitable for vertical and horizontal installation. One has a choice between galvanised steel and stainless steel as the material (depending on the type). Availability and order number can be found in the catalogue pages for the respective type.

Anti-vortex plate

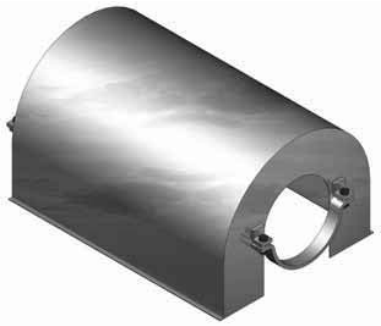

The anti-vortex plate is fastened in the inflow area of the submersible pump, thus preventing air turbulence during operation. Due to the use of an anti-vortex plate, the fluid is pumped to the unit in a defined manner. As a result, the required minimum submersion in water can be minimised and the tank can be better used.

The anti-vortex plate is made specifically in terms of size and design for each type of unit. One has a choice between galvanised steel and stainless steel as the material. Availability, materials used and order number can be found in the catalogue pages for the respective type.

Pressure shroud

The submersible pumps can be installed in a pressure shroud for the purpose of pressure boosting. This makes it possible to install the unit in a tank or directly in the pipe itself (similar to dry well installation).

Pressure shroud pumps can be installed vertically and, up to a certain number of stages, also horizontally. The connections for the pipe system can be attached axially or laterally. The connections are also available as flanged or threaded connections. The design of the pressure shroud has been standardised up to a size of 8". Individual designs are available in sizes of 10" and higher. The pressure shrouds can be equipped with a pedestal on request. One has a choice between galvanised steel and stainless steel as the material.

Mechanical accessories

Pressure reducer

For the prevention of pressure damage and for reducing water consumption. In addition, irritating flow noise is minimised by p = const. control.

Version
- Housing with pressure gauge connection on both sides
- Variably adjustable by means of setting screw
- Setpoint spring
- Valve insert including diaphragms
- Fine sieve (0–16 mm)
- DVGW-certified

Technical data

T max.:	40 °C
Supply pressure:	PN25
Minimum pressure difference:	1 bar
Diaphragm load:	max. 3 bar
Nominal diameters:	½" to 2"

Materials

Housing:	Brass
Valve seat:	Plastic
Screwed connections:	Brass
Diaphragm:	NBR (fabric-reinforced)
Gaskets:	NBR
Fine sieve / screws / nuts:	Stainless steel

Options
Pressure gauge, angle, versions for other pressures and temperatures

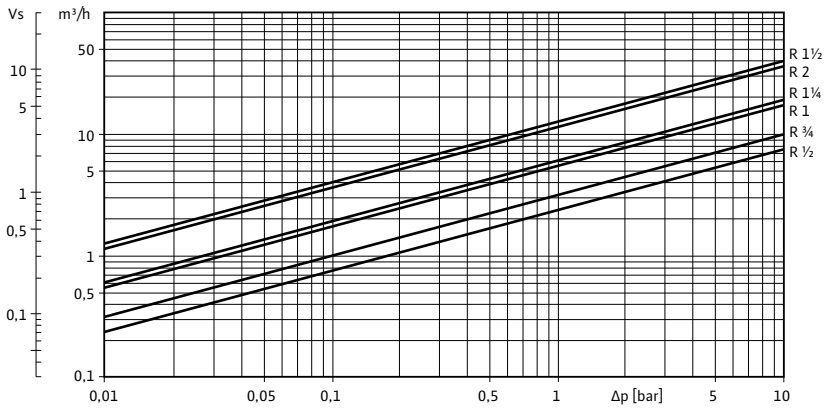

Key: Delta p = pressure drop in the valve; Vs or m^3/h. Flow rate

Mechanical accessories

Full-stroke safety valve

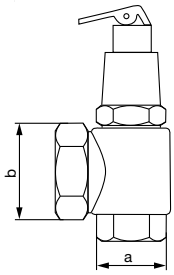

Safety valve for protecting the system against overpressure when water supply and pressure boosting systems are used. Installation according to local building regulations and DIN.

Attention: Safety valves are delivered with factory settings only.
Blow-off pressure 6, 10 or 16 bar. Specify when ordering.

Technical data

Permitted fluids:	water without abrasive materials
Fluid temperature:	Max. 130 °C
Response pressure:	10 % above factory-set pressure
Discharge output:	See table

Materials

Housing:	red brass/brass
Gasket:	Perbunan/EPDM

Overview of sizes

Size (a)	Blow-off connection (b)		Blow-off power at 10 % pressure exceedance		
	6-10 bar	16 bar	6 bar	10 bar	16 bar
	-	-	m^3/h		
Rp ¾	Rp 1¼	Rp 1¼	12.9	16.6	21.0
Rp 1	Rp 1	Rp 1¼	9.0	13.0	37.5
Rp 1¼	Rp 1¼	Rp 2	18.9	24.4	73.5

Ventilation valve UBV

For ventilation and the avoidance of underpressure in the ascending pipe. Installation above the water level. Sizes: R 1¼, R 1½ and R 2. The valve is made of brass.

Drain valve UEV

For the drainage of the ascending pipe in conjunction with system operation using air chambers, where the air in the ascending pipe is to be used for filling the air chamber. Sizes: R 1¼, R 1½ and R 2. The valve is made of galvanised steel.

Mechanical accessories

Float valve

Float valve for use in open tanks with up to 1000 l useable volume for level control. Float valve R ½ as control valve in conjunction with diaphragm valve.

Technical data

Approved medium:	water without abrasive materials
Fluid temperature:	Max. 50 °C
Inlet pressure:	Max. 5 bar

Materials

Housing:	Brass
Control rod:	Stainless steel
Float:	Plastic

Volume flow rates, weights

Nominal diameter	Weight	Supply pressure				
		1 bar	2 bar	3 bar	4 bar	5 bar
	[kg]	[m³/h]				
R ½	1.4	2.1	3.0	3.6	4.2	4.7
R 1½	3.5	13.5	19.0	23.0	27.0	30.0
R 2	4.9	17.4	24.6	30.0	34.8	38.9

Diaphragm valve

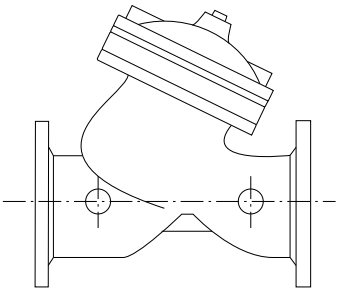

Diaphragm valve for use for level control in open tanks with a useable volume up to 1500 l in conjunction with a float valve R ½ as control valve

Technical data

Approved medium:	Water without abrasive materials
Fluid temperature:	Max. 90 °C
Inlet pressure:	Min. 0.8 bar / max. 16 bar

Materials

Housing:	Grey cast iron, plastic-coated on the outside and inside
Control rod:	Stainless steel

Volume flow rates, weights

Nominal diameter	Weight	Supply pressure				
	–	1 bar	2 bar	3 bar	4 bar	5 bar
	[kg]	[m³/h]				
DN 65	10	55	78	95	110	123
DN 80	24	90	126	154	180	200
DN 100	38	144	200	250	300	320
DN 125	68	250	350	430	500	540

Mechanical accessories

Non-return valve RV/S

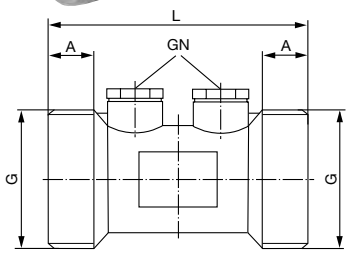

Non-return valve without screwed connections for use in water supply applications, DVGW-certified.

Technical data

Fluid temperature: Max. 90 °C

Materials

Housing: MS 58

Overview of sizes

Nominal diameter	Pressure class	Dimensions				Wrench size
	PN	A	L	G	GN	SW
	[bar]	[mm]		[inch]		[mm]
DN 15	10	10	66	¾	¼	25
DN 20	10	3	771	1	¼	30
DN 25	10	4	801	1¼	¼	38
DN 32	10	6	901	1½	¼	38
DN 40	10	7	1001	2	¼	46
DN 50	10	1	1152	2½	¼	60

Options
- Sizes DN 65 and larger
- Screwed connection for non-return valve made of brass

Ball valve

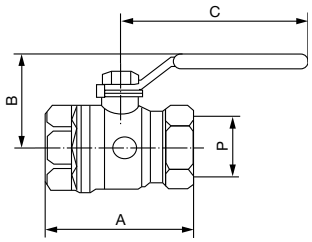

Ball valve with lever for easy and safe installation. Suitable for potable water applications in accordance with DIN 1988. Ball valves up to R 2 DVGW-certified.

Materials

Housing: Brass, chrome-plated

Overview of sizes

Nominal diameter	Pressure class	Dimensions				
	PN	A	B	C	P	Kv
	[bar]	[mm]				
R ¼	42	39	26.1	42	8	6.6
R ½	42	54	33.7	78	10	10.2
R ¾	42	62	45.5	96	12.7	18.45
R 1	35	75	49.6	96	17.5	36.3
R 1¼	35	84	53.7	96	22.5	73.5
R 1½	35	93	68	138	28	105
R 2	35	107	73.5	138	35	158
R 2½	28	143	101	172	45	240

Options
- Seals in PTFE

Mechanical accessories

Diaphragm pressure vessels, type D – export version

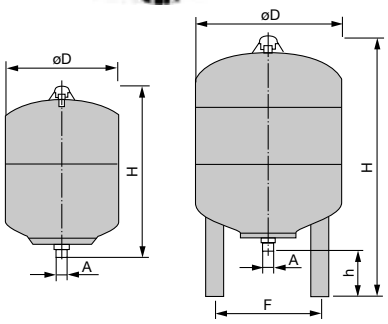

The vessels are for avoiding pressure surges in the system and reduce the switching frequency of the pumps/system.
Important: These expansion tanks do not comply with DIN 4807/T5 and are therefore not permitted for use in potable water systems in Germany.

Materials

Diaphragm vessel:	RSt 37-2
Diaphragm:	Potable-water resistant special elastomer
Surface:	Powder-coated
Water connection:	Stainless steel

Overview of sizes

Type	Operating pressure	Useable capacity	Dimensions					Weight
	–	–	A	D	F	H	h	–
	[bar]	[l]	[mm]					[kg]
8 D	16	6.0	R ¾	206	–	315	–	4.5
8 D	25	6.0	R ¾	206	–	315	–	5.0
12 D	16	9.0	R ¾	280	–	293	–	6.0
18 D	11	13.5	R ¾	280	–	370	–	7.5
25 D	10	18.7	R ¾	280	–	490	–	9.0
33 D	10	23.5	R ¾	280	236	690	236	11.5

Mechanical accessories

Diaphragm pressure vessel, type DE – export version

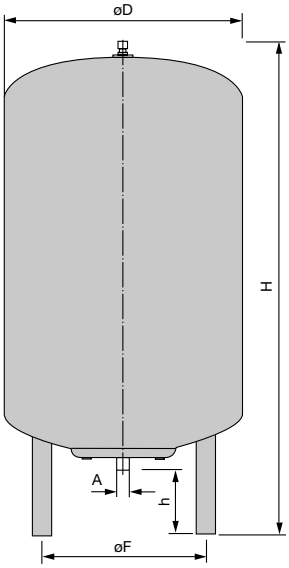

Expansion tank with replaceable diaphragms according to requirements of the food protection law for use in water supply systems, pressure boosting systems and sprinkler systems.
The tanks are for avoiding pressure surges in the system and reduce the switching frequency of the pumps/system.
Important: These expansion tanks do not comply with DIN 4807/T5 and are therefore not permitted for use in potable water systems in Germany.

Materials

Diaphragm vessel:	RSt 37-2
Diaphragm:	Potable-water resistant special elastomer
Surface:	Stove-enamel finish

Technical data

Max. temperature:	70 °C (343 K)

Overview of sizes

Type	Operating pressure	Useable capacity	Dimensions					Weight
	–	–	A	D	F	H	h	–
	[bar]	[l]	[mm]					[kg]
60 DE	10	45	G 1	480	293	740	160	18
80 DE	10	60	G 1	480	351	730	152	20
100 DE	10	75	G 1	480	351	834	152	25
200 DE	10	150	G ¼	634	485	967	144	43
300 DE	10	225	G ¼	634	485	1267	144	48
500 DE	10	375	G ¼	740	570	1475	133	79

Options

- Tanks acc. to DIN 4807/T5 and DIN-DVGW (Reg. no. NW9481AT2535) with flow-through fixture, diaphragm in accordance with KTW (Cat. C) and plastic coating in accordance with KTW (Cat. B) (see pressure boosting system accessories).

Mechanical accessories

Diaphragm pressure vessel, DT5 Junior type

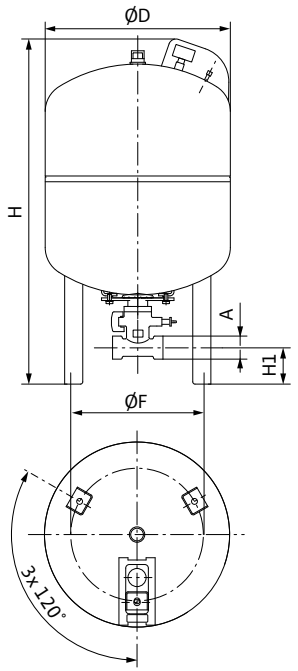

Type-certified diaphragm pressure vessels for use in conjunction with potable water, water-supply or pressure boosting systems. The vessels are for avoiding pressure surges in the system and reduce the switching frequency of the pumps/system.

- Diaphragm pressure vessels for potable water, pressure boosting and water-heating systems.
- Through-flow, complete with flow-through fixture including shut-off and drain
- Built and tested in accordance with DIN 4807 T5, DIN DVGW Reg. no. NW-9481AU2123 and NW-9481AT2535
- Approval according to Pressure Appliances Directive 97/23/EC

Important: Use of the diaphragm pressure vessels on the supply pressure side must comply with the specifications of the local water-supply companies.

Type key	**Wilo DT5 junior 500**
DT5	Diaphragm pressure vessel
junior	Size (junior, Di, Duo)
500	Nominal content in l

Technical data

Fluid temperature:	Max. 70 °C
Permitted fluid:	Water without abrasive substances
Supply pressure:	4.0 bar

Materials

Tank:	Green or white, plastic-coated in accordance with KTW A
Diaphragm:	In accordance with KTW C and W 270, replaceable

Overview of sizes: Operating pressure 10 bar (PN10)

Type	Useable capacity	Tilted height	Dimensions					Weight
	–	–	A	D	F	H	h	–
	[l]	[mm]						[kg]
DT5 junior 60	60	868	Rp 1¼	409	293	766	80	15
DT5 junior 80	80	890	Rp 1¼	480	351	750	72	17
DT5 junior 100	100	962	Rp 1¼	480	351	834	72	20
DT5 junior 200	200	1161	Rp 1¼	634	485	973	80	47
DT5 junior 300	300	1422	Rp 1¼	634	485	1273	80	53
DT5 junior 400	400	1448	Rp 1¼	740	570	1245	69	73
DT5 junior 500	500	1650	Rp 1¼	740	570	1475	69	79

The **maintenance** of diaphragm expansion tanks is governed by **DIN 4807 T2**. It must be carried out on an annual basis and essentially consists of checking and adjusting the tank supply pressure and the system filling/initial pressure.

Testing of pressure tanks in accordance with BetrSichV (German Health and Safety at Work Regulations), version dated 27.09.2003, for operation in accordance with the supplied installation, operation and maintenance instructions. Classification in Fluid Group 2 as per DGRL – e.g. water, air, nitrogen = not potentially explosive, non-toxic, not easily flammable.

Mechanical accessories

Diaphragm pressure vessel, DT5 Duo type

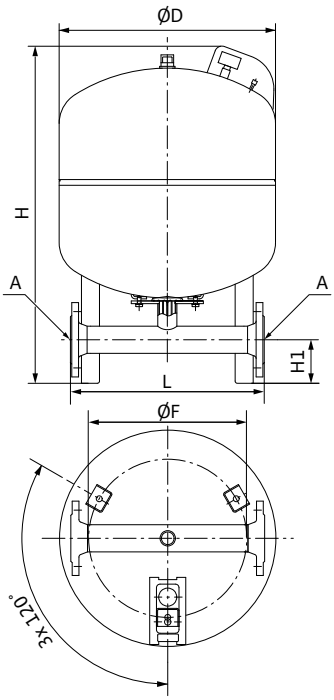

Like for DT5 Junior, plus:
- Piping with flange connection
- For particularly high volume flow rates
- Shutoff provided by customer

Materials

Tank:	Steel
Diaphragm:	Elastomer in accordance with DIN 4807 T5/prEN 13831, approved for use with foods

Overview of sizes: Operating pressure 10 bar (PN10)

Type	Useable capacity	Tilted height	Dimensions					Weight
	–	–	A	D	F	H	h	–
	[l]	[mm]						[kg]
DT5 Duo 80	80	890	DN50	480	351	750	97	23
DT5 Duo 100	100	962	DN50	480	351	834	97	26
DT5 Duo 200	200	1161	DN50	634	485	973	104	53
DT5 Duo 300	300	1422	DN50	634	485	1273	104	59
DT5 Duo 400	400	1448	DN80	740	570	1245	110	79
DT5 Duo 500	500	1650	DN80	740	570	1475	110	85
DT5 Duo 600	600	2001	DN80	740	640	1859	233	168
DT5 Duo 800	800	2439	DN80	740	640	2324	233	208
DT5 Duo 1000	1000	2832	DN80	740	640	2734	233	248
DT5 Duo 1001	1000	2237	DN100	1000	875	2001	141	429
DT5 Duo 1500	1500	2325	DN100	1200	1070	1991	141	539
DT5 Duo 2000	2000	2729	DN100	1200	1070	2451	141	714
DT5 Duo 3000	3000	2933	DN100	1500	1100	2520	168	1054

Overview of sizes: Operating pressure 16 bar (PN16)

Type	Useable capacity	Tilted height	Dimensions					Weight
	–	–	A	D	F	H	h	–
	[l]	[mm]						[kg]
DT5 Duo 80	80	890	DN50	480	351	750	97	32
DT5 Duo 100	100	962	DN50	480	351	834	97	34
DT5 Duo 200	200	1161	DN50	634	485	973	104	61
DT5 Duo 300	300	1422	DN50	634	485	1273	104	70
DT5 Duo 400	400	1578	DN80	740	640	1394	233	118
DT5 Duo 500	500	1776	DN80	740	640	1615	233	130
DT5 Duo 600	600	2001	DN80	740	640	1859	233	178
DT5 Duo 800	800	2439	DN80	740	640	2324	233	228
DT5 Duo 1000	1000	2832	DN80	740	640	2734	233	263
DT5 Duo 1001	1000	2237	DN100	1000	875	2001	141	530
DT5 Duo 1500	1500	2325	DN100	1200	1070	1991	141	685
DT5 Duo 2000	2000	2729	DN100	1200	1070	2451	141	895
DT5 Duo 3000	3000	2934	DN100	1500	1100	2521	168	1240

The **maintenance** of diaphragm expansion tanks is governed by **DIN 4807 T2**. It must be carried out on an annual basis and essentially consists of checking and adjusting the tank admission pressure and the system filling/initial pressure.

Testing of pressure tanks in accordance with BetrSichV (German Health and Safety at Work Regulations), version dated 27.09.2003, for operation in accordance with the supplied installation, operation and maintenance instructions. Classification in Fluid Group 2 as per DGRL – e.g. water, air, nitrogen = not potentially explosive, non-toxic, not easily flammable.

Electrical accessories

Pressure switch kit, 0 – 16 bar

In the shunt on the kit attached to the pipework on the pressure side for mounting an automatic pressure-dependent single-pump system in combination with the ER-1 switchgear. The diaphragm pressure vessel placed on top is for buffering leakages.

Materials

Ball valve:	Brass, nickel-plated
Diaphragm vessel:	St 37, diaphragm, food safe

Scope of delivery
- Red brass or bronze fittings
- Diaphragm pressure vessel 8 l, PN16
- Pressure gauge 0–16 bar
- Pressure switch 0–16 bar

Pressure switch ER-2 kit

For mounting an automatic double-pump system with pressure-dependent operation. The pressure sensor measures the applied pressure and delivers signals which can be evaluated by the ER-2 switchgear.

Scope of delivery
- (Red) brass fittings
- Diaphragm pressure vessel 8 l, PN16
- Pressure sensor made of stainless steel, 4–20 mA/0–16 bar, connection: ¾"

Signal transmitter kit

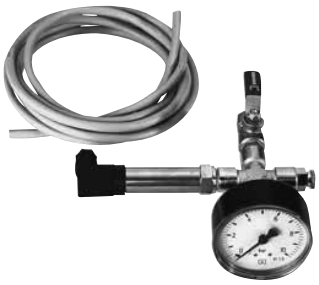

For mounting an automatic pump system with pressure-dependent operation. The pressure measured by the pressure sensor can be evaluated by the ER-2 switchgear

Scope of delivery
- Red brass or bronze fittings
- Pressure gauge
- Pressure sensor made of stainless steel, 4–20 mA
- Pressure range: 0–16, 0–25 or 0–40 bar

Electrical accessories

Low-water cut-out switchgear kit (WMS)

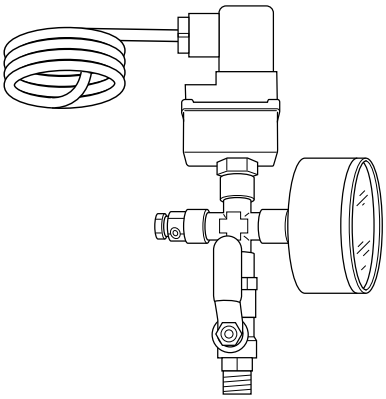

As low-water protection for direct connection.

Principle of operation
Admission pressure switch locks at 1.0 bar and enables at 1.3 bar (factory works setting in accordance with DIN 1988 (EN 806)). The factory settings cannot be modified.

Scope of delivery
- Pressure switch incl. plug and approx. 1.2 m cable
- T-piece R ¼
- Reducer R ¾ – ¼
- Pressure gauge
- Sealing material

Submersible electrodes

As low water cut-out switchgear for indirect connection. Cable length: 3 m, 4 m, 5 m, 10 m, 15 m, 20 m, 25 m, 30 m, 35 m, 40 m, 50 m.
Options
- Longer cable lengths
- Version as single electrode without cable

Important: At least 2 submersible electrodes are required for direct connection to ER series switchgears.
For single electrodes, an appropriate cable must be provided by the customer and the cable's compatibility with potable water applications checked.

Float switch WA...

Signal transmitters for level control devices as min./max switches for fluids that are slightly dirty, floats with the fluid and switches when tilted.The signal transmitter must be permanently positioned on its signal line for the switching point.

Technical data
- Max. fluid temperature: 60 - 90 °C
- Cable lengths: 5...30 m
- Switching capacity: 250 V / 8 A / 1.1 kW
- Max. pressure: 1 bar
- Protection class: IP 68
- Type WA...: as low-water cut-out switchgear for indirect connection.
- Type WAO...: if the actuated pump pumps into a tank, above the level of which switching is to take place.

Versions
- Type WA...: Switching points up "ON"“ / down "OFF"
- Type WAO...: Switching points up "OFF"“ / down "ON"
- TYPE ...EK: Float switch incl. small switchgear EK for pumps with AC motors up to 1 kW nominal power

Electrical accessories

Electrical connection of Wilo submersible pumps
Cable lengths and cross-sections
The cable cross-sections required for the electrical connection of Wilo submersible pumps depend on the length of the connection cable, the mains voltage and on the motor power and starting mode of the motors. This data can be taken from the following table.

Each motor cable with the respective motor cable cross-section can be extended by at least a minimum of 30 m.

For additional planning information, see Wilo-planning guide "Borehole technology".

Maximum possible cable length and required cable cross-section

Mains connection	Motor power	Cable cross-section 4 x n [mm²]																
		1,5	2.5	4	6	10	16	25	35	50	70	95	120	150	185	240	300	400
	[kW]	Max. possible cable length [m]																
Direct starting 3~400 V 50 Hz or 3~380 V 60 Hz	11	–	45	72	107	176	278	423	577	–	–	–	–	–	–	–	–	–
	15	–	–	–	80	132	208	317	452	595	–	–	–	–	–	–	–	–
	18,5	–	–	–	65	107	168	256	348	481	645	–	–	–	–	–	–	–
	22	–	–	–	–	90	142	215	295	407	545	704	–	–	–	–	–	–
	30	–	–	–	–	–	108	164	223	306	408	522	622	–	–	–	–	–
	37	–	–	–	–	–	86	131	179	248	335	434	524	623	–	–	–	–
	45	–	–	–	–	–	–	112	152	209	279	358	426	502	580	–	–	–
	55	–	–	–	–	–	–	–	124	170	228	293	351	414	481	571	–	–
	75	–	–	–	–	–	–	–	–	129	173	223	267	316	367	437	500	583
	93	–	–	–	–	–	–	–	–	–	134	172	205	241	279	330	375	433
	110	–	–	–	–	–	–	–	–	–	–	145	174	205	237	281	320	370
Direct starting 1~230 V 50 Hz	0.25	190	320	510	770	1260	1970	2960	3990	5340	6970	8750	–	–	–	–	–	–
	0.37	120	210	330	500	820	1290	1950	2640	3560	4680	5910	–	–	–	–	–	–
	0.55	80	140	230	350	580	900	1360	1830	2450	3210	4020	–	–	–	–	–	–
	0.75	60	110	180	270	440	690	1050	1430	1930	2550	3230	–	–	–	–	–	–
	1,1	40	70	120	190	310	490	750	1020	1390	1860	2380	–	–	–	–	–	–
	1,5	30	60	100	150	250	400	620	850	1180	1590	2070	–	–	–	–	–	–
	2.2	20	40	60	100	170	270	410	560	770	1030	1320	–	–	–	–	–	–
	3.7	–	–	40	60	110	170	260	370	520	710	930	–	–	–	–	–	–

Electrical accessories

Motor cable kit for 4" motors

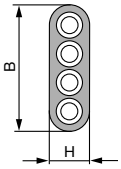

Factory-wired cable kit for simple connection to the pump motor.

Scope of delivery
- Flat cable with plug connection on the motor end and bare cable end on the switchbox end. Available in the lengths 10 – 50 m in increments of 5 m, for 1~230 V and 3~400 V.

Motor cables – by the metre
For the freely selectable extension of the cable attached to the pump motor. Suitable for use in potable water. Flexible class E copper cable E in accordance with NFC 32-013/IEC 228.

Scope of delivery
- Flat cable with bare cable ends. Available in length increments of 1 m.
- Insulation made of polyethylene
- Temperature limits: in water up to +50 °C, in the air -20...+50 °C

Option
- Cable with PVC insulation

Dimensions

Size	Dimensions	
–	A	B
[mm²]	[mm]	
4x1.5	15.8	5.0
4x2.5	19.5	5.6
4x4	21.5	6.5
4x6	23.6	7.2
4x10	29.1	8.8
4x16	35.3	10.4

Tolerance: +/_0.3 mm

Motor cable kit for 6" motors

Factory-wired cable kit for simple connection to the pump motor.

Scope of delivery
- Flat cable with plug connection on the motor end and bare cable end on the switchbox end. Available in the lengths: 10 m, 20 m, 30 m, 40 m and 50 m
- Suitable for use in potable water.

Electrical accessories

Earth cable

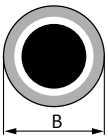

Single-wire cable as earth cable with rubber coating for permanent use in water. KTW-approved for use in potable water.

Dimensions	
Size	**Dimension**
–	**W**
[mm²]	**[mm]**
1x8.4	8.9
1x25	13.0

Tolerance: +/-0.3 mm

Motor cable for potable water

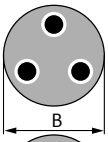

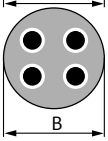

For the freely selectable extension of the cable attached to the pump motor. Suitable for potable water applications. Flexible class E copper cable in accordance with ACS 04 ACC LI 021, NF C 15-100-AD8, BS 6920, IEC 60332-1.

Scope of delivery
- Round cable with bare cable ends. Available in length increments of 1 m.
- Insulation made of EPR (ethylene-propylene rubber)
- Temperature limits: in water up to +40 °C, in the air up to +70 °C

Dimensions, weights		
Size	**Dimensions**	**Weight**
–	**B**	**–**
[mm²]	**[mm]**	**[kg/km]**
4x1.5	11.0	163
4x2.5	12.9	245
4x4	14.7	340
4x6	16.9	455
4x10	20.0	680
4x16	23.0	950
3x1.5	10.0	135
3x2.5	11.8	175
3x4	13.4	250
3x6	15.0	352
3x10	16.0	475
3x16	20.0	685

Tolerance: +/-0.5 mm

Electrical accessories

Motor cable for process water

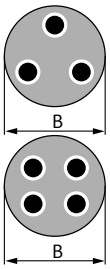

For the freely selectable extension of the cable attached to the pump motor. Flexible copper cable, class E.

Scope of delivery
- Round cable with bare cable ends. Available in length increments of 1 m.
- Insulation made of EPR (ethylene-propylene rubber)
- Temperature limits: in water up to +50 °C, in the air up to +70 °C

Dimensions, weights

Size	Dimensions	Weight
–	B	–
[mm²]	[mm]	[kg/km]
4x4	15.0	388
4x6	17.0	520
4x10	22.5	930
4x16	27.0	1300
4x25	31.5	1880
4x35	35.5	2450
4x50	41,0	3380
4x70	45.5	4450
4x95	52.5	5830
4x120	57.0	7100
3x25	28.5	1500
3x35	32.0	1970
3x50	37.0	2700
3x70	41,0	3520

Tolerance: +/_1 mm

Quick Connect Cable for TWU 4-QC pumps

Factory-wired cable set for simple extension of the motor cable of the TWU 4-...-QC pumps.

Scope of delivery
- Flat cable with plug connections. Available in the lengths: 10 m, 20 m, 30 m, 50 m, 80 m, 100 m.
- Cable binders for fastening the motor cable to the water supply line.
- Safety rope (polypropylene, 6 mm).

Sensor cable for PT100

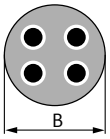

For the freely selectable extension of the PT100 temperature sensor built into the pump motor. Not suitable for use in potable water.

Scope of delivery
- Round cable with bare cable ends. Available in length increments of 1 m.
- Insulation made of PVC
- Temperature limits: in water up to +50 °C, in the air up to +70 °C

Dimensions, weights

Size	Dimensions	Weight
–	W	–
[mm²]	[mm]	[kg/km]
4x1	9.5	170

Tolerance: +/_1 mm

Electrical accessories

PT100 sensor

Screw-in PT100 sensor for thermal monitoring, suitable for subsequent connection to 6" and 8" motors.

Heat shrink cable sleeve

For connecting two open cable ends.

Scope of delivery
- Kit consisting of 4 shrink hose sockets with accessories.
- Available for cable cross-sections of 4x1.5 mm^2 to 4x25 mm^2

Motor cable connector kit

For firm quick-plug connections of motor cable and cable extension. **Important:** The motor cable must already equipped with a plug.

Scope of delivery
- Kit consisting of a coupling component, 2-component sealing resin and small parts.
- Available for cable cross-sections of 4x1.5 mm^2

Electrical accessories

Spillage kit

For the safe connection of two open cable ends under water.

Scope of delivery
- Kit consisting of 2 half-shells and a 2-component sealing resin plus 4 cable clamps.
- Available for cable cross-sections of 4x4 mm^2 to 4x10 mm^2, 4x16 mm^2, 4x35 mm^2, 4x70 mm^2, 4x120 mm^2 and 4x180 mm^2

Plastic cable connector

The plastic cable connector can be used for water pressure-tight connections between existing power cables and additional power cables. The cable connector is supplied in a complete set.

Overview of sizes

Sizes	Dimensions	Cable sizes
–	ø x L	–
–	[mm]	[mm^2]
0	26 x 200	3x1.5 / 4x1.5
1	37 x 285	3x2.5...3x6 / 4x2.5...4x4 / 7x1.5...7x2.5
2	55 x 500	3x10...3x35 / 4x6...4x25 / 7x4
3	80 x 765	3x50...3x70 / 4x35...4x70
4	85 x 770	3x95

Dry run protection device SK 277

Switchgear for wall-mounted installation as dry-running protection system for indirect connection of a pump, incl. 3 submersible electrodes as signal transmitter (dimensions, upper level, lower level).

Technical data

Operating voltage:	3~400 V, 50 Hz; 3~230 V, 50 Hz; 1~230 V, 50 Hz
Connected load:	Max. 3 kW
Protection class:	IP 54
Cable length:	5 m
Dimensions:	165 x 110 x 128 mm

Materials

Switchbox:	Plastic
Electrode:	V4A
Electrode sheathing:	PVC

Electrical accessories

Single-pump switchgear ER-1

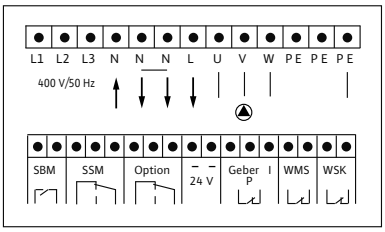

Fully automatic switchgear for wall-mounted installation for the operation of a pump with one drive motor with maximum current consumption (back-up fuse) according to the following table:

Technical data		
Type	**Starting mode**	**Max. current consumption**
	-	-
	-	[A]
ER-1-4.0	Direct	10.0
ER-1-5.5	Direct	14.0
ER-1-7.5	Direct	18.5
ER-1-11.0	Direct	32.0
ER-1-15.0	Direct	39.0
ER-1-22.0	Direct	46.0
ER-1-5.5	Star-delta	14.0
ER-1-7.5	Star-delta	18.5
ER-1-11.0	Star-delta	32.0
ER-1-15.0	Star-delta	39.0
ER-1-22.0	Star-delta	46.0

Other sizes on request

Pump switching
- Pressure switch (WVA kit) or
- Float switch WAO 65

Low-water cutout
- Pressure switch WMS or
- Float switch WA 65 or
- 2 submersible electrodes or
- Switchbox SK 277 incl. 3 submersible electrodes

Equipment
- Built-in electronic motor protection for each pump
- Triggering of protection against low water level
- Main switch, 4-pole
- Selection switch, Manual-0-Automatic
- Run and fault signal lights
- Potential-free collective fault signal and collective run signal
- Switch-off delay variable, variable, 0-120 sec.
- Integrated test run function
- Housing material: Plastic; from 5.5 kW: Steel sheeting, powder-coated
- Protection class: IP41; from 5.5 kW: IP54

Options
- NR version with fine resolution level control relay
- SS version with soft starter

Note
- The type of current and the voltage of the mains connection must be checked (3~400 V, 50/60 Hz in accordance with IEC 38). To ensure perfect electrical operating conditions, the shape of the mains connection voltage curve as per VDE 0160 must be complied with.
- The data listed on the name plate of the pump motor to be activated is to be observed.
- The mains connection cable depends on the number of pumps and on local regulations. VDE and EVU guidelines and local requirements must all be complied with.
- The connection line is to be installed in such a way that it can under no circumstances come into contact with the pipe and/or the pump and motor housing.
- Motor connection cable: Specification of the minimum cross-sections in accordance with VDE 0100/part 430, electrical load capacity of cables and lines with PVC insulation and installation type B2 for +30 °C ambient temperature.
- Motor and transmitter cables must be shielded. Take care to ensure that the cable shields are correctly connected.
- Back-up fuse that can be used: Automatic circuit-breaker (K) or safety fuse (gl)
- Storage: -10 °C...+60 °C

Electrical accessories

Double-pump switchgear ER-2

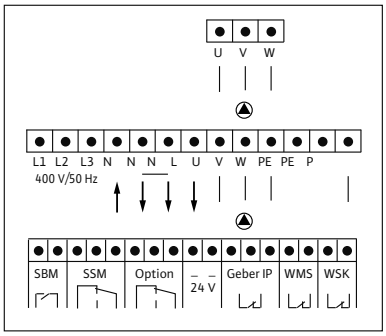

Fully automatic switchgear for wall-mounted installation for the operation of two pumps with one drive motor each with a maximum current consumption (back-up fuse) according to the following table:

Technical data		
Type	**Starting mode**	**Max. current consumption**
	-	-
	-	**[A]**
ER-2-4.0	Direct	2x 10.0
ER-2-5.5	Direct	2x 14.0
ER-2-7.5	Direct	2x 18.5
ER-2-9.0	Direct	2x 24.0
ER-2-11.0	Direct	2x 32.0
ER-2-15.0	Direct	2x 39.0
ER-2-22.0	Direct	2x 46.0
ER-2-5.5	Star-delta	2x 14.0
ER-2-7.5	Star-delta	2x 18.5
ER-2-9.0	Star-delta	2x 24.0
ER-2-11.0	Star-delta	2x 32.0
ER-2-15.0	Star-delta	2x 39.0
ER-2-22.0	Star-delta	2x 46.0

Other sizes on request

Pump switching
- Pressure transmitter (0-16, 0-25 or 0-40 bar)

Low-water cutout
- Pressure switch WMS or
- Float switch WA 65 or
- 2 submersible electrodes or
- switch cabinet SK 277 incl. 3 submersible electrodes

Equipment
- Built-in electronic motor protection for each pump
- Triggering of protection against low water level
- Main switch, 4-pole
- Selection switch, Manual-0-Automatic, for each pump
- Run and fault signal light for each pump
- Potential-free collective fault signal and collective run signal
- Switch-off delay variable, variable, 0-120 sec.
- Integrated test run function (can be deactivated)
- Housing material: Plastic; from 5.5 kW: Steel sheeting, powder-coated
- Protection class: IP41; from 5.5 kW: IP54

Options
- NR version with fine resolution level control relay
- SS version with soft starter

Note
- The type of current and the voltage of the mains connection must be checked (3~400 V, 50/60 Hz in accordance with IEC 38). To ensure perfect electrical operating conditions, the shape of the mains connection voltage curve as per VDE 0160 must be complied with.
- The data listed on the name plate of the pump motor to be activated is to be observed.
- The mains connection cable depends on the number of pumps and on local specifications. VDE and EVU guidelines and local requirements must all be complied with.
- The connection line is to be installed in such a way that it can under no circumstances come into contact with the pipe and/or the pump and motor housing.
- Motor connection cable: Specification of the minimum cross-sections in accordance with VDE 0100/Teil 430, electrical load capacity of cables and lines with PVC insulation and installation type B2 for +30 °C ambient temperature.
- Motor and transmitter cables must be shielded. Take care to ensure that the cable shields are correctly connected.
- Back-up fuse that can be used: Automatic circuit-breaker (K) or safety fuse (gl)
- Storage: -10 °C...+60 °C

Electrical accessories

Switchbox ESK 1/PSK 1

Control devices for connecting a pump for supplying water from boreholes and rainwater storage tanks (for single-family and multi-family houses) , including 2 submersible electrodes and 4 brackets holders for wall-mounted installation. Connection options for 2 submersible electrodes and 1 pressure switch/float switch. Can be used with 1~230 V and 3~400 V. With integrated motor protection, suitable for wall-mounted installation.

Technical data

Operating voltage:	1~230 V; 3~230 V; 3~400 V
Frequency:	50/60 Hz
Protection class:	IP 54
Perm. ambient temperature:	-10 °C...+55 °C
Max. current consumption:	ESK 1: 1-12 A?> PSK 1: 10-23 A
Dimensions:	300 x 195 x 105 (WxHxD)
Weight:	ESK 1: 2.5 kg; PSK 1: 2.8 kg

Wilo-Helix EXCEL

wilo

PEFC
PEFC/04-31-0810

ClimatePartner
klimaneutral
Druck | ID: 53446-1301-1006

Subject to change without prior notice. In appliance of our General Terms of Delivery and Service (see www.wilo.com)

2136143/2200T/1303/INT/MP

WILO SE
Nortkirchenstraße 100
44263 Dortmund
Germany
T +49 231 4102-0
F +49 231 4102-7363
wilo@wilo.com
www.wilo.com

Pioneering for You

More contact details at www.wilo.com